TOYOTA TACOMA

OUTLINE OF NEW FEATURES

The TOYOTA TACOMA is a high-performance pick up with sporty and powerful style. The following changes are made for 2000 model year.

1. Model Line-Up

The PreRunner extra cab model has also been introduced in Canada.

2. 2RZ-FE and 3RZ-FE Engines

- The generator has been changed from 70 A to 80 A for both engines.
- On the California specification model, both engines comply with the LEV (Low Emission Vehicle) requirements.
- The EGR (Exhaust Gas Recirculation) system has been discontinued for the 2RZ-FE engine.

3. 5VZ-FE Engine

- As in the 2RZ-FE and 3RZ-FE engines, the generator has been changed from 70 A to 80 A.
- The exhaust manifold, the crossover pipe, and the TWC (Three-Way Catalytic Converter) of the 2WD model, the California specification 4WD model, and the California specification PreRunner are the same double-wall construction exhaust manifold and crossover pipe made of stainless steel, and the WU-TWC (Warm-Up Three-Way Catalytic Converter) used on the California specification 4Runner.
- The mounting angle of the front engine mount has been optimized to reduce vibration.

4. Automatic Transmission

- Overdrive switch has been changed to the momentary type for 3RZ-FE and 5VZ-FE engine models. For details, see the General 2000 Features section.
- The torque converter clutch has been changed to the high efficient type on the 3RZ-FE engine model.

5. Differential

The differential gear ratio has been changed for the 4WD manual transmission model with 3RZ-FE engine and PreRunner extra cab model with 3RZ-FE engine.

6. Lighting

The daytime running light system is optional equipment for U.S.A.

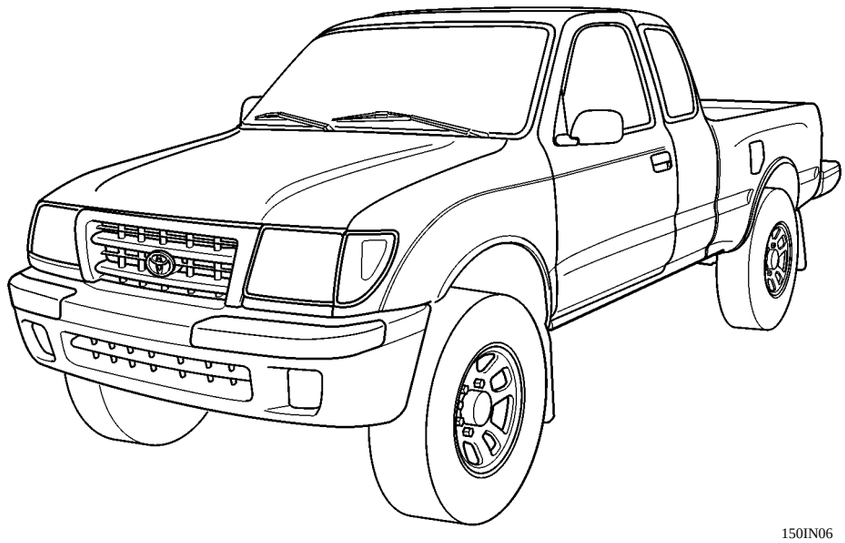

150IN06

MODEL CODE

RZN140 L - T R M D K A B

1 2 3 4 5 6 7 8 9

1 BASIC MODEL CODE

CODE	DRIVE TYPE	ENGINE	WHEEL BASE
RZN140	2WD	2RZ-FE	Short
RZN150	2WD	2RZ-FE	Extra Long
VZN150	2WD	5VZ-FE	Extra Long
RZN161	4WD	3RZ-FE	Short
RZN171	4WD	3RZ-FE	Extra Long
VZN170	4WD	5VZ-FE	Extra Long
RZN191	2WD (Pre Runner)	3RZ-FE	Short
RZN196	2WD (Pre Runner)	3RZ-FE	Extra Long
VZN195	2WD (Pre Runner)	5VZ-FE	Extra Long

2 STEERING WHEEL POSITION

L : Left-Hand Drive

3 CAB TYPE

T : Regular Cab
C : Extra Cab

4 DECK & TIRE TYPE

R : Steel Low Deck (Single Tire)

5 GEAR SHIFT TYPE

M : 5-Speed Manual, Floor
S : 4-Speed Automatic, Column
P : 4-Speed Automatic, Floor

6 GRADE

D : DLX
G : SR5

7 ENGINE SPECIFICATION

K : DOHC and SFI

8 DESTINATION

A : U.S.A. and Canada

9 PRODUCT

B : NUMMI*

*: NUMMI (New United Motor Manufacturing, Inc.)

MODEL LINE-UP

DESTI-NATION	DRIVE TYPE	ENGINE	LOAD CAPAC-ITY	SEAT-ING CAPAC-ITY	WHEEL BASE	CAB TYPE	GRADE	TRANSMISSION			
								5-Speed Manual		4-Speed Automatic	
								W59	R150 (F)*1	A43D	A340E (F)*2
U.S.A. and Canada	2WD	2RZ-FE	0.5 t	3 (2)	Short	Regular Cab	DLX	RZN140L-TRMDKAB		RZN140L-TRSDKAB	
				5 (4)	Extra Long	Extra Cab		RZN150L-CRMDKAB		RZN150L-CRSDKAB	
		5VZ-FE							VZN150L-CRMDKAB*3		VZN150L-CRSDKAB*3
	4WD	3RZ-FE		3 (2)	Short	Regular Cab	DLX	RZN161L-TRMDKAB*3			RZN161L-TRPDKAB*3
				5 (4)	Extra Long	Extra Cab		RZN171L-CRMDKAB			RZN171L-CRPDKAB
		5VZ-FE							VZN170L-CRMDKAB		VZN170L-CRPDKAB
				4			SR5		VZN170L-CRMGKAB		VZN170L-CRPGKAB
	2WD Pre Runner	3RZ-FE		3 (2)	Short	Regular Cab	DLX				RZN191L-TRPDKAB*3
				5 (4)	Extra Long	Extra Cab					RZN196L-CRPDKAB
		5VZ-FE									VZN195L-CRPDKAB

( ): Option
*1: 2WD: R150, 4WD: R150F
*2: 2WD: A340E, 4WD: A340F
*3: Model for U.S.A. only

NEW FEATURES

■2RZ-FE AND 3RZ-FE ENGINE

1. Description

- The generator has been changed from 70 A to 80 A for both engines.
- On the California specification model, both engines comply with the LEV (Low Emission Vehicle) requirements.
- The EGR (Exhaust Gas Recirculation) system has been discontinued for the 2RZ-FE engine.

2. LEV Compliance

General

To comply with the LEV requirements, the following changes have been made:

- The shape of the intake port of the cylinder head has been changed.
- Valve timing has been changed.
- Along with the change in the shape of the intake port of the cylinder head, the intake manifold has been changed.
- A compact, 1-coil type IAC valve has been adopted.
- An exhaust manifold made of stainless steel has been adopted.
- WU-TWC (Warm Up Three-Way Catalytic Converter) is used.
- Compact, fine-atomization, 12-hole type fuel injectors have been adopted.
- The DIS (Direct Ignition System) that provides one ignition coil for every cylinder has been adopted.
- Air-fuel ratio sensor is used.

Cylinder Head

A Siamese port configuration has been adopted for the intake port of the cylinder head.

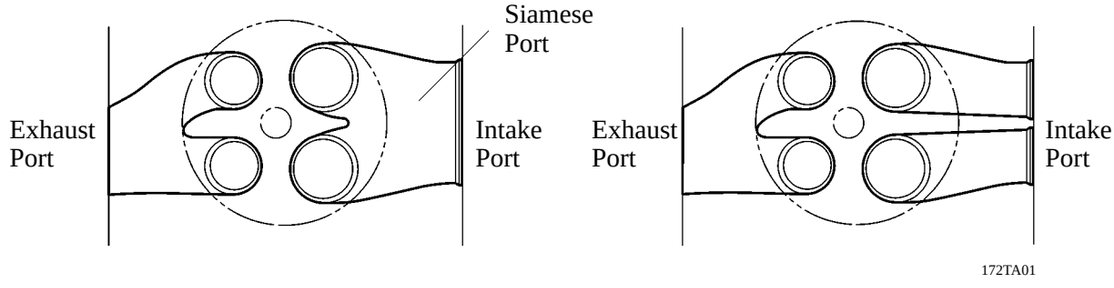

California Specification Model **Except California Specification Model**

Valve Mechanism

The valve timing has been changed.

▶ Specifications ◀

Model		California Specification Model	Except California Specification Model
Intake	Open	2° BTDC	5° BTDC
	Close	48° ABDC	45° ABDC
Exhaust	Open	42° BBDC	←
	Close	2° ATDC	←

Intake and Exhaust System

1) IAC Valve

A compact, 1-coil type IAC valve has been adopted.

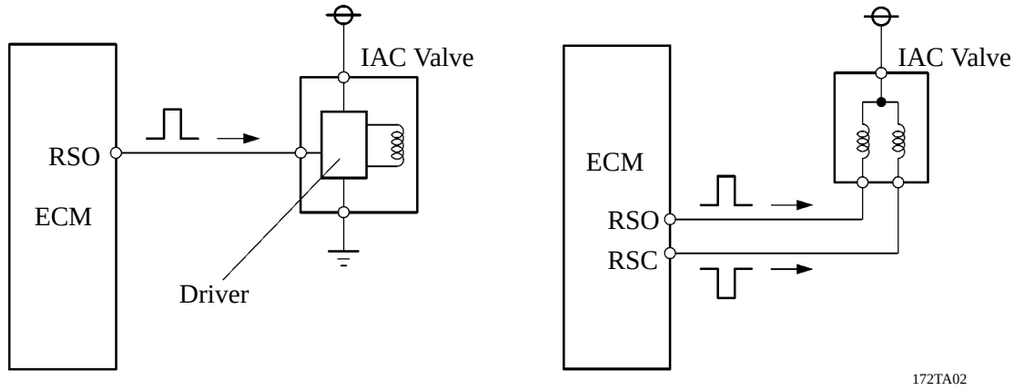

California Specification Model **Except California Specification Model**

2) Intake Manifold

Along with the change in the shape of the intake port of the cylinder head, the intake manifold has been changed.

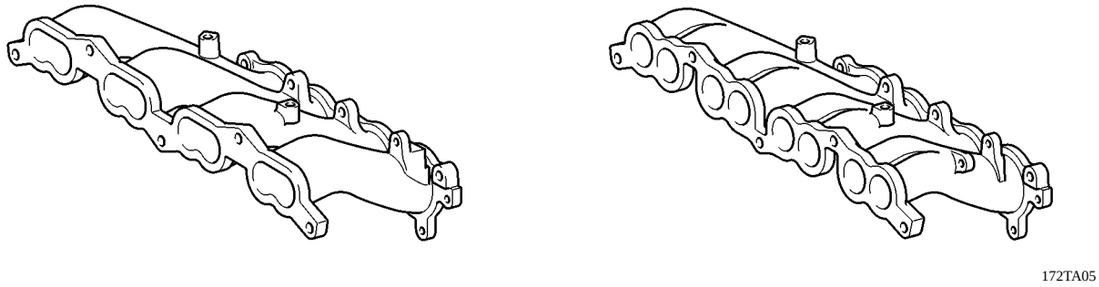

California Specification Model **Except California Specification Model**

7

3) Exhaust Manifold

An exhaust manifold made of stainless steel has been adopted.
A manifold with double-wall construction has been adopted on the 2RZ-FE engine.

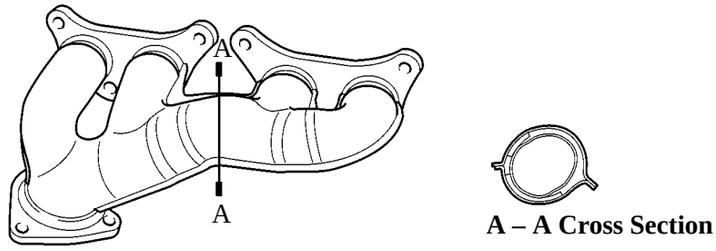

A – A Cross Section

2RZ-FE Engine 172TA03

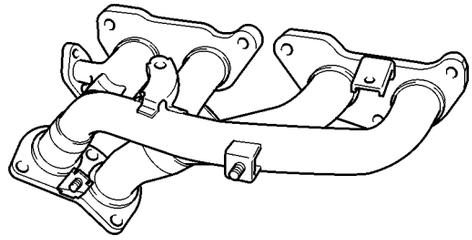

3RZ-FE Engine 172TA04

4) Exhaust Pipe

A WU-TWC (Warm-Up Three-Way Catalytic Converter) has been adopted on the front exhaust pipe, and a TWC (Three-Way Catalytic Converter) has been adopted on the front exhaust pipe No.2.

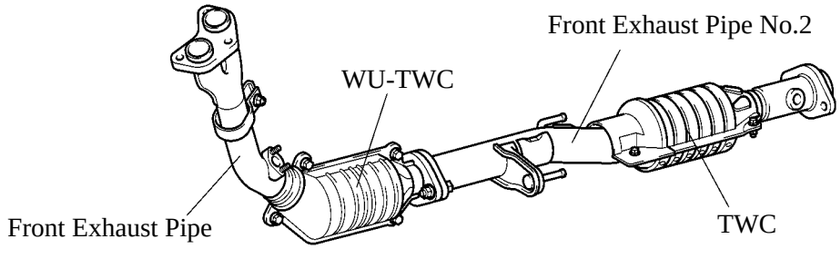

For 3RZ-FE Engine 172TA06

Fuel System

Compact, fine-atomization, 12-hole type fuel injectors have been adopted to improve the atomization of fuel.

Ignition System

The DIS (Direct Ignition System) in the California specification model is an independent ignition system which has one ignition coil for each cylinder.
This system consists of an igniter, ignition coil, and plug cap as a single unit, thus eliminating the high tension cord.

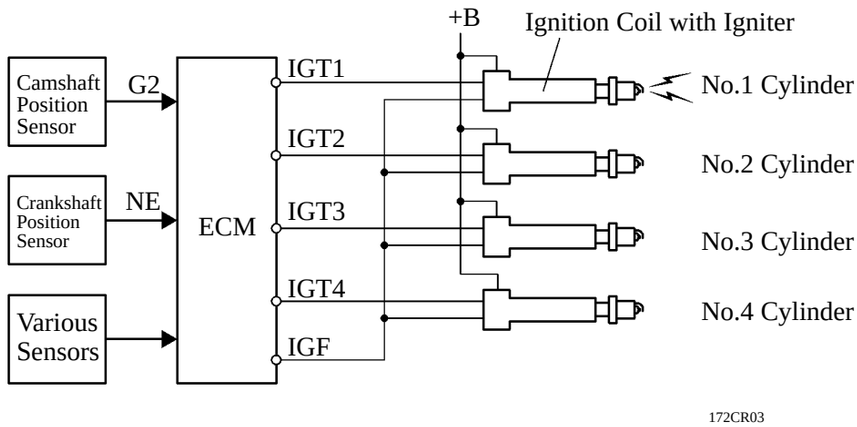

California Specification Model

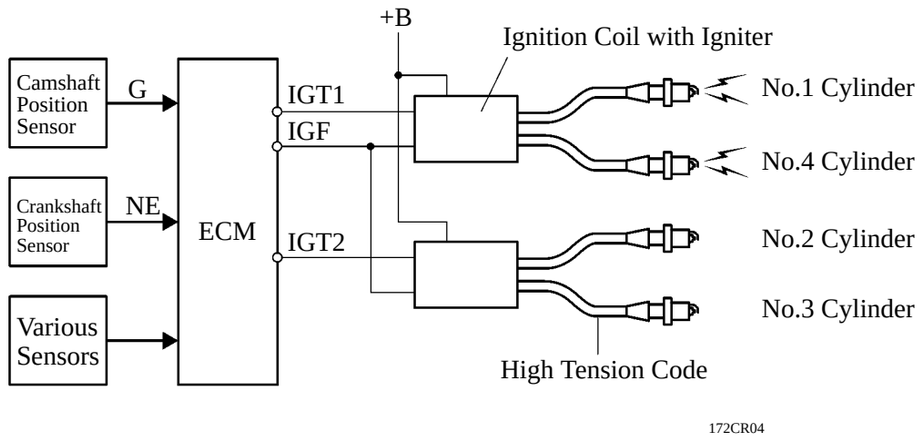

Except California Specification Model

7

Engine Control System

An air-fuel ratio sensor has been adopted to improve the precision of the air-fuel ratio feedback control to reduce the exhaust emission.

■ DIFFERENTIAL

The differential gear ratio has been changed for the 4WD manual transmission model with 3RZ-FE engine (1) and PreRunner extra cab model with 3RZ-FE engine (2).

▶ Specification ◀

Model		’00 Model		’99 Model	
		(1)	(2)	(1)	(2)
Differential Gear Ratio	Standard	3.909	4.100	3.583	3.909
	Option	4.300	4.555	4.100	4.300

AUTOMATIC TRANSMISSION

■OVERDRIVE SWITCH

The overdrive switch has been changed from the previous ON/OFF lock type to the momentary type switch. Pressing the momentary switch closes (turns ON) the contact points, and releasing the switch opens (turns OFF) the contact points. Accordingly, pressing the switch causes the signal to be input into the ECM. Pressing the switch in overdrive turns OFF the overdrive. Pressing it again turns the overdrive back ON. When the overdrive is OFF, turning the ignition switch from OFF to ON turns the overdrive back ON.

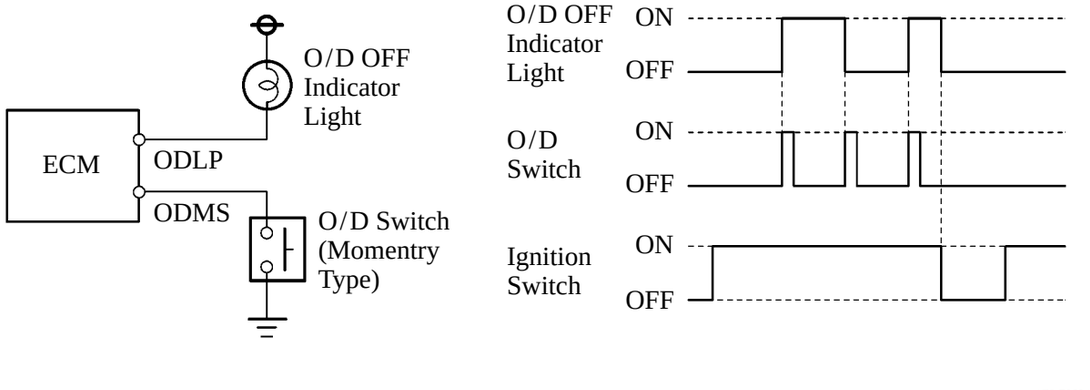

New

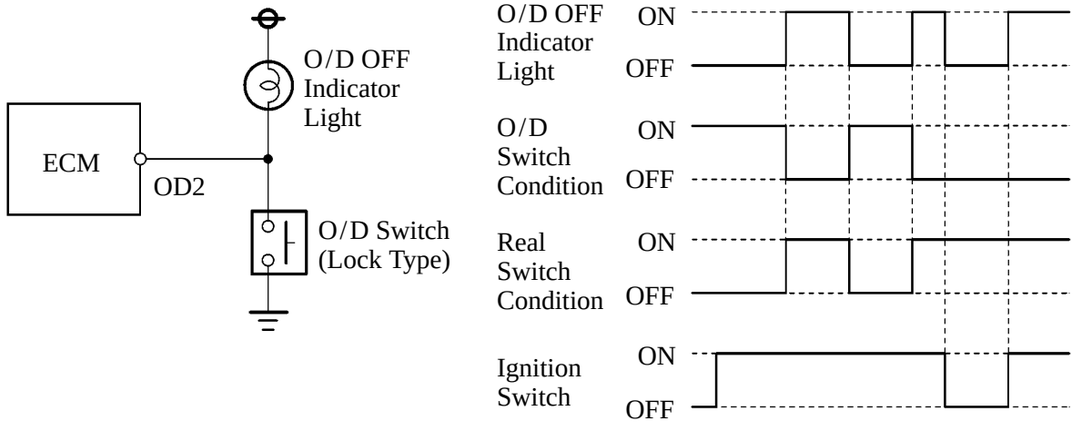

Previous

Foreword

Welcome to the growing group of value–conscious people who drive Toyotas. We are proud of the advanced engineering and quality construction of each vehicle we build.

This Owner’s Manual explains the features of your new Toyota. Please read it and follow the instructions carefully so that you can enjoy many years of safe motoring.

When it comes to service, remember that your Toyota dealer knows your vehicle best and is interested in your complete satisfaction. He will provide quality maintenance and any other assistance you may require.

Please leave this Owner’s Manual in this vehicle at the time of resale. The next owner will need this information also.

All information and specifications in this manual are current at the time of printing. However, because of Toyota’s policy of continual product improvement, we reserve the right to make changes at any time without notice.

Please note that this manual applies to all models and explains all equipment, including options. Therefore, you may find some explanations for equipment not installed on your vehicle.

TOYOTA MOTOR CORPORATION

© 1999 TOYOTA MOTOR CORPORATION

All rights reserved. This material may not be reproduced or copied, in whole or in part, without the written permission of Toyota Motor Corporation.

SECTION 1– 1

OPERATION OF INSTRUMENTS AND CONTROLS

Overview of instruments and controls

Instrument panel overview 2
Instrument cluster overview 4
Indicator symbols on the instrument panel 6

Instrument panel overview

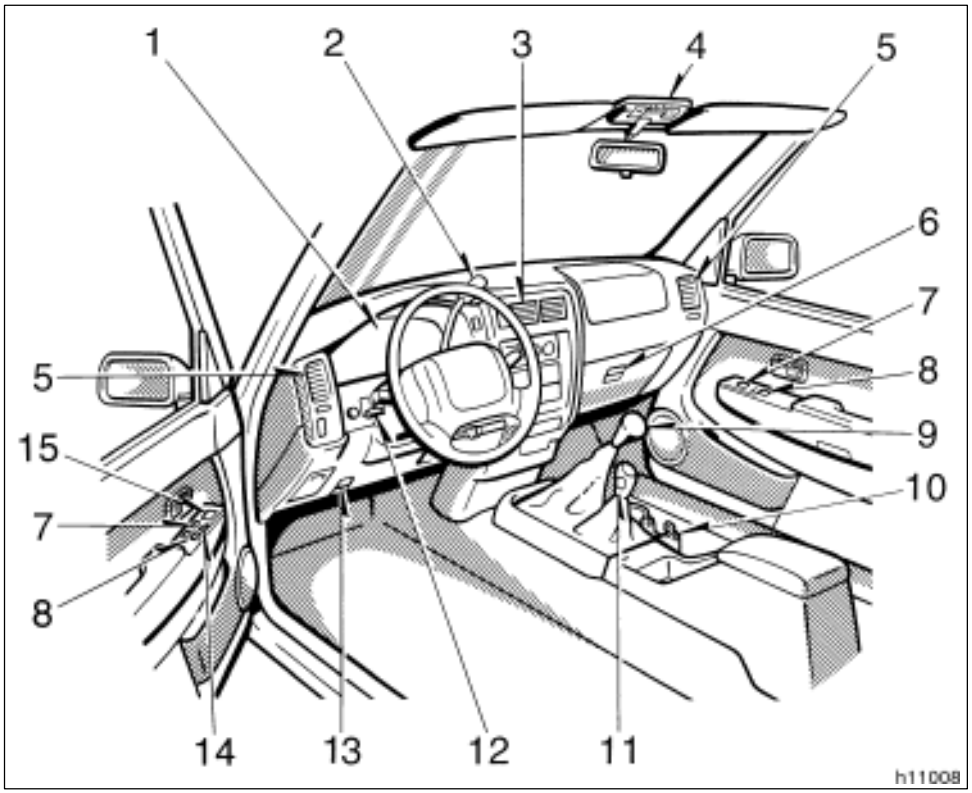

1. Instrument cluster
2. Automatic transmission selector lever (column shift)
3. Center vents
4. Personal lights or interior light
5. Side vents
6. Glove box
7. Power door lock switches
8. Power window switches
9. Manual transmission gear shift lever or automatic transmission selector lever (floor shift)
10. Cup holder
11. Front drive control lever
12. Tilt steering lock release lever
13. Hood lock release lever
14. Window lock switch
15. Power rear view mirror control switch

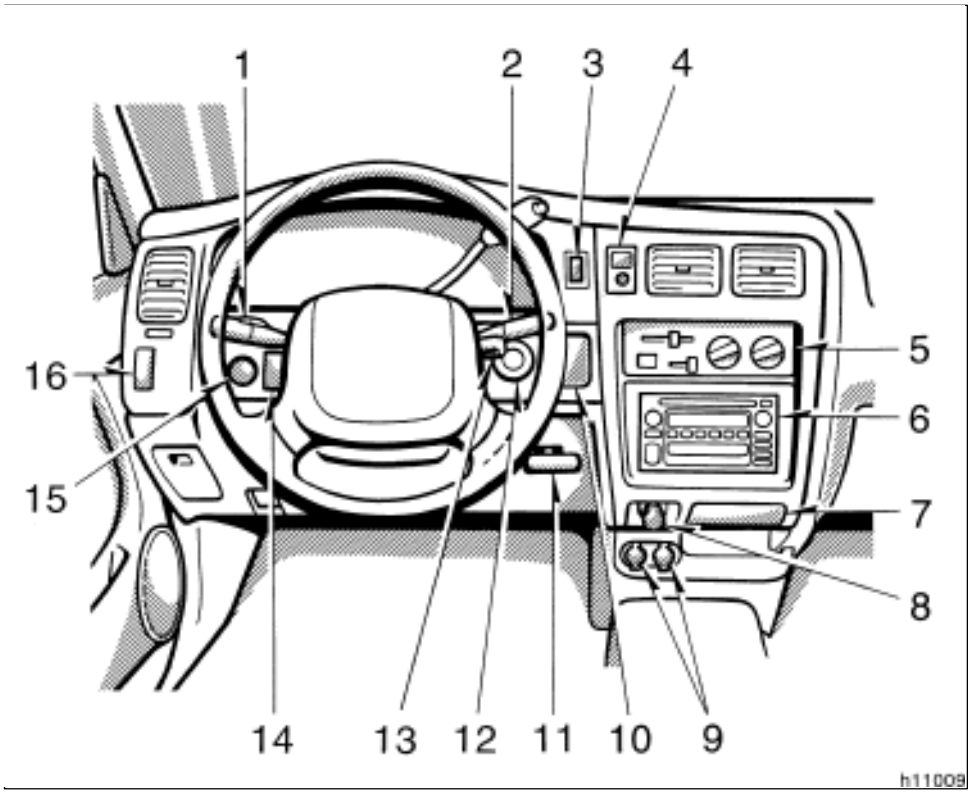

1. Headlight and turn signal switch
2. Wiper and washer switches
3. Emergency flasher switch
4. Passenger airbag manual on–off switch
5. Air conditioning controls
6. Car audio
7. Ashtray
8. Cigarette lighter
9. Power outlets
10. Clock
11. Parking brake lever
12. Ignition switch
13. Cruise control switch
14. Rear differential lock button
15. Instrument panel light control knob
16. Clutch start cancel switch (manual transmission) or driving pattern selector button (automatic transmission)

Instrument cluster overview

▶With tachometer

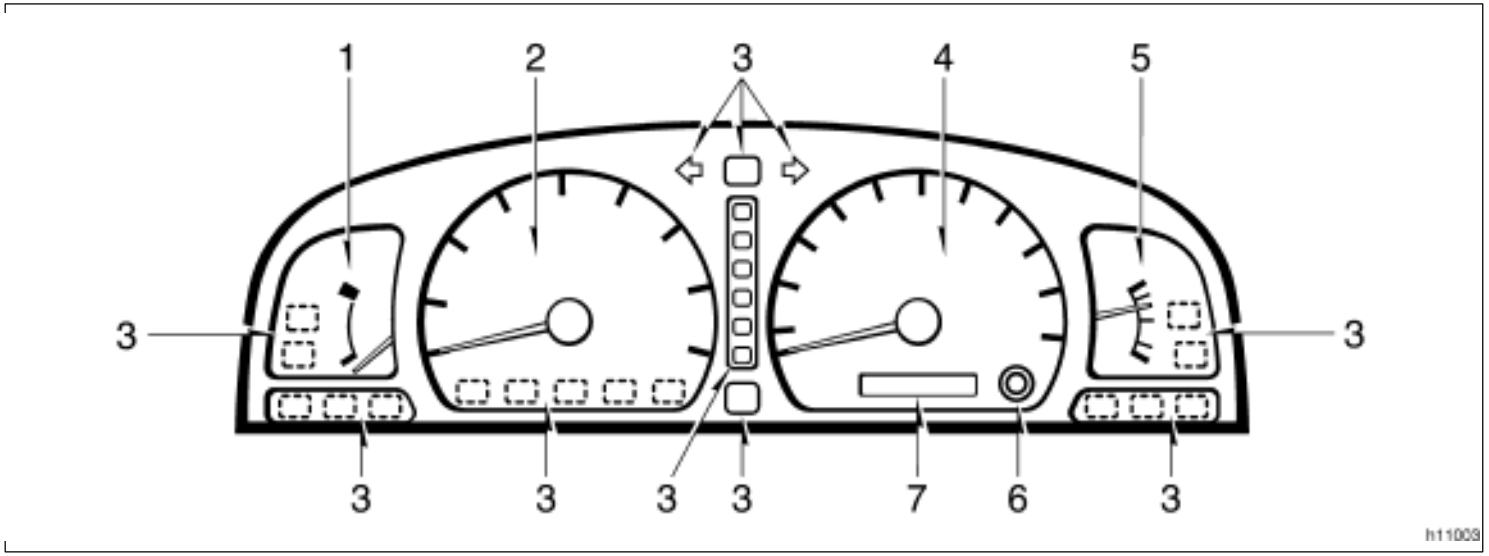

1. Engine coolant temperature gauge
2. Tachometer
3. Service reminder indicators and indicator lights
4. Speedometer
5. Fuel gauge
6. Trip meter reset knob
7. Odometer and two trip meters

▶Without tachometer

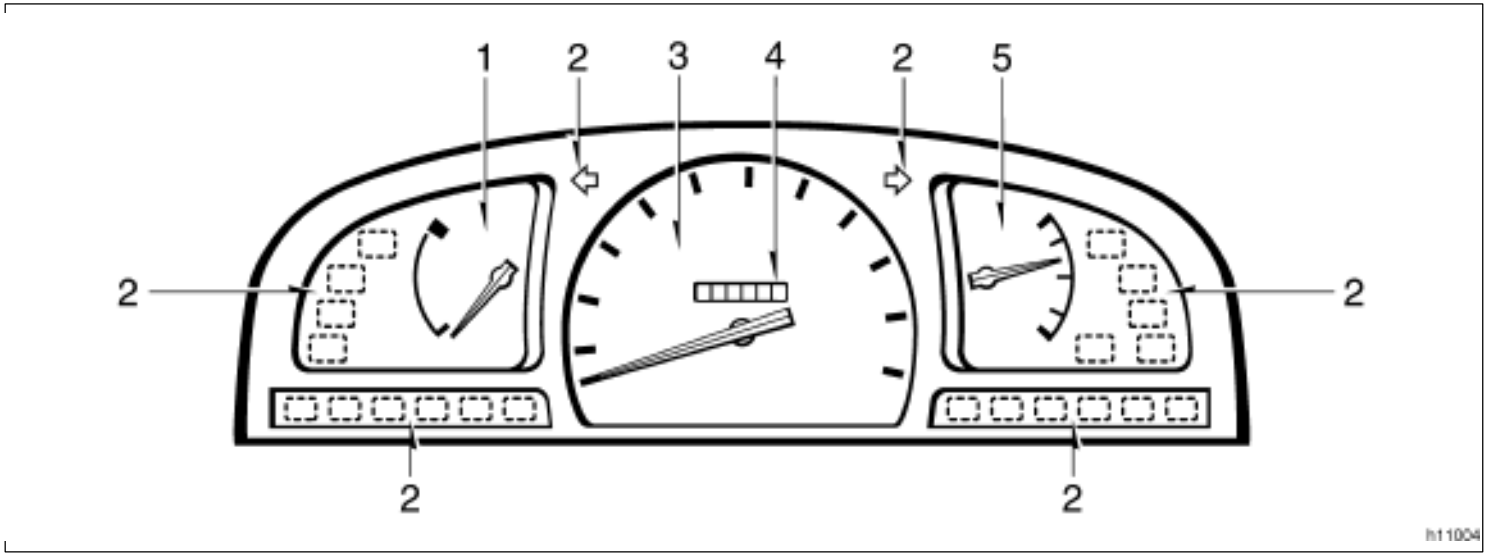

1. Engine coolant temperature gauge
2. Service reminder indicators and indicator lights
3. Speedometer
4. Odometer
5. Fuel gauge

Indicator symbols on the instrument panel

	Brake system warning light*1
	Seat belt reminder light*1
	Discharge warning light*1
	Low oil pressure warning light*1
	Malfunction indicator lamp*1
	Low fuel level warning light*1
ABS (type A)  (type B)	Anti–lock brake system warning light*1
	SRS warning light*1

A/T P	Unengaged “Park” warning light*1
A/T OIL TEMP	Automatic transmission fluid temperature warning light*1
	Low windshield washer fluid level warning light*1
	Turn signal indicator lights
	Headlight high beam indicator light
O/D OFF	Overdrive–off indicator light
ECT PWR	Driving pattern (POWER mode) indicator light
P R N D 2 L	Automatic transmission indicator lights
	Four–wheel drive indicator light

RR DIFF LOCK	Rear differential lock indicator light
CRUISE	Cruise control indicator light*2

*1: For details, see “Service reminder indicators and warning buzzers” in Section 1–5.

*2: If this light flashes, see “Cruise control” in Section 1–6.

SECTION 1–2

OPERATION OF INSTRUMENTS AND CONTROLS

Keys and Doors

Keys 10
Side doors 10
Power windows 12
Quarter windows 13
Rear window 14
Tailgate 14
Hood 15
Fuel tank cap 16
Detachable moon roof 17
Detachable sun shade 19

Keys

This key works in every lock.

Since the doors can be locked without a key, you should always carry a spare key in case you accidentally lock your key inside the vehicle.

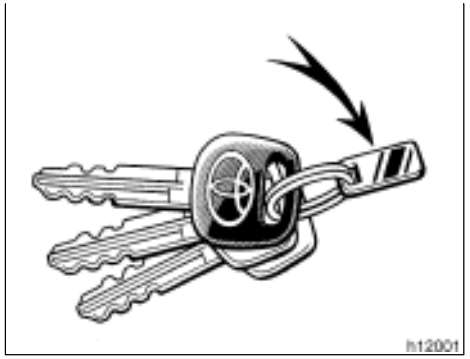

KEY NUMBER PLATE

Your key number is shown on the plate. Keep the plate in a safe place such as your wallet, not in the vehicle.

If you should lose your keys or if you need additional keys, duplicates can be made by a Toyota dealer using the key number.

We recommend you to write down the key number and keep it in safe place.

Side doors

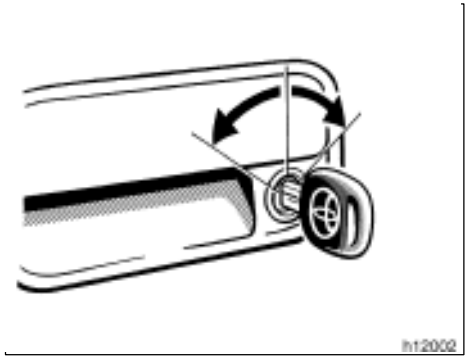

LOCKING AND UNLOCKING WITH KEY

Insert the key into the keyhole and turn it.

To lock: Turn the key forward.
To unlock: Turn the key backward.

Vehicles with power door lock system—Both doors lock and unlock simultaneously with either door. In the driver's door lock, turning the key once will unlock the driver's door and twice in succession will unlock the driver's door and passenger's door simultaneously.

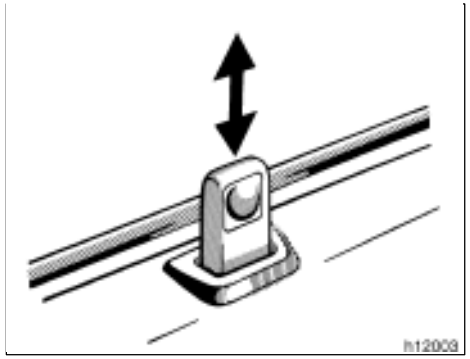

LOCKING AND UNLOCKING WITH INSIDE LOCK BUTTON

Move the lock button.

To lock: Push the button downward.
To unlock: Pull the button upward.

Closing the door with the lock button pushed in will also lock the door. Be careful not to lock your keys in the vehicle.

Vehicles with power door lock system—The doors cannot be locked if you leave the key in the ignition switch.

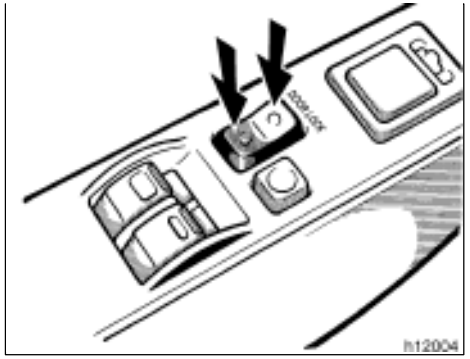

Driver’s side

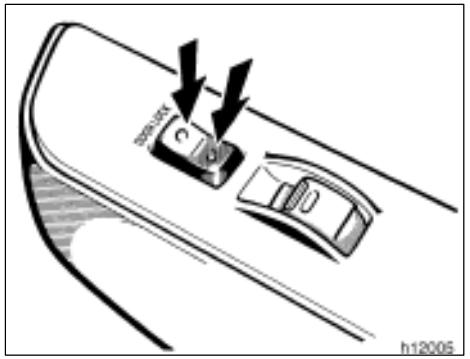

Passenger’s side

LOCKING AND UNLOCKING WITH POWER DOOR LOCK SWITCH

Push the switch.

To lock: Push the switch on the front side.
To unlock: Push the switch on the rear side.

Both doors lock or unlock simultaneously.

CAUTION

Before driving, be sure that the doors are closed and locked, especially when small children are in the vehicle. Along with the proper use of seat belts, locking the doors helps prevent the driver and passengers from being thrown out from the vehicle during an accident. It also helps prevent the doors from being opened unintentionally.

Power windows

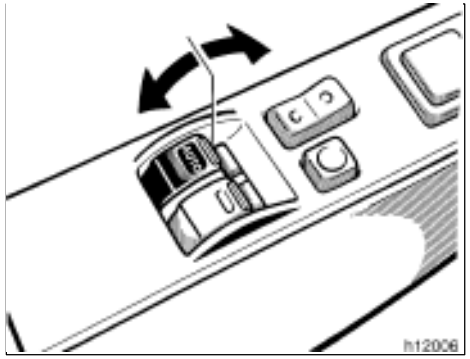

The windows can be operated with the switch on each door.

The power windows work when the ignition switch is in the “ON” position.

Key off operation: If both front doors are closed, they work for 43 seconds even after the ignition switch is turned off. They stop working when either front door is opened.

OPERATING THE DRIVER’S WINDOW

Use the switch on the driver’s door.

Normal operation: The window moves as long as you hold the switch.

To open: Lightly push down the switch.
To close: Pull up the switch.

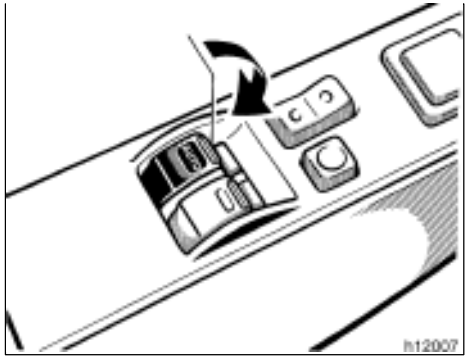

Automatic operation (to open only): Push the switch completely down and then release it. The window will fully open. To stop the window partway, lightly pull the switch up and then release it.

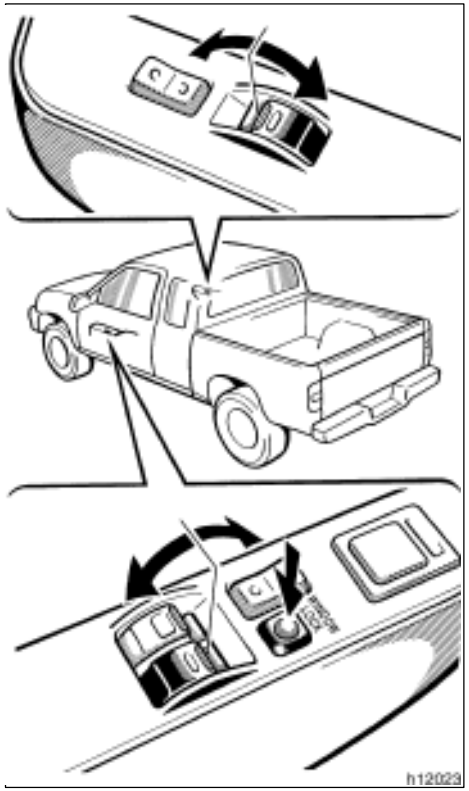

OPERATING THE PASSENGER’S WINDOW

Use the switch on the passenger’s door or the switch on the driver’s door that controls the passenger’s window.

The window moves as long as you hold the switch.

To open: Push down the switch.
To close: Pull up the switch.

If you push in the “WINDOW LOCK” switch on the driver’s door, the passenger’s windows cannot be operated.

CAUTION

To avoid serious personal injury, you must do the following.

- **Always make sure the head, hands and other parts of the body of all occupants are kept completely inside the vehicle before you close the power windows. If someone’s neck, head or hands gets caught in a closing window, it could result in a serious injury. When anyone closes the power windows, be sure that they operate the windows safely.**
- **When small children are in the vehicle, never let them use the power window switches without supervision. Use the “WINDOW LOCK” switch to prevent them from making unexpected use of the switches.**
- **Never leave small children alone in the vehicle, especially with the ignition key still inserted. They could use the power window switches and get trapped in a window. Unattended children can become involved in serious accidents.**

Quarter windows (Xtra–cab models)

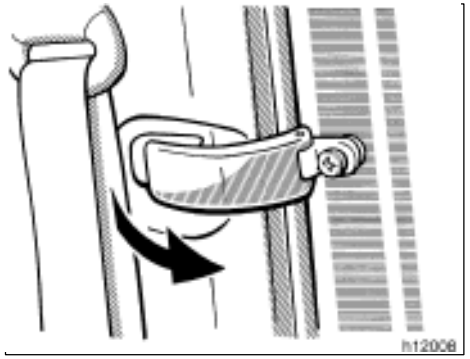

To open the quarter window, pull the latch handle toward you and swing it fully out.

When closing the window, make sure it is completely closed.

Rear window

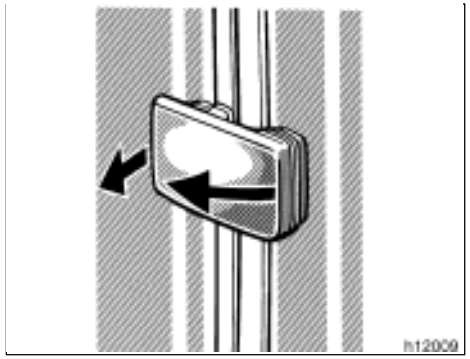

To unlock the rear window, pull the left end of the latch handle toward you and disengage the right end from the catch.

When closing the window, make sure it is completely closed.

Tailgate

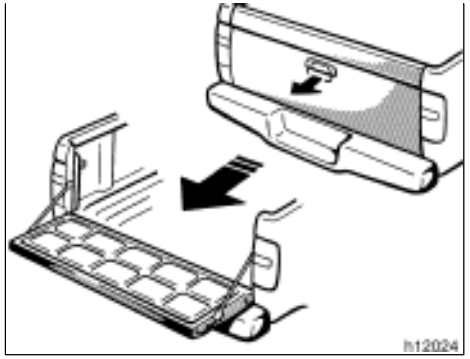

To open the tailgate, pull the handle up.

The support cables will hold the tailgate horizontal.

See “Luggage stowage precautions” in Section 2 for precautions to observe for loading luggage.

After closing the tailgate, try pulling it toward you to make sure it is securely locked.

NOTICE

Avoid driving with the tailgate open.

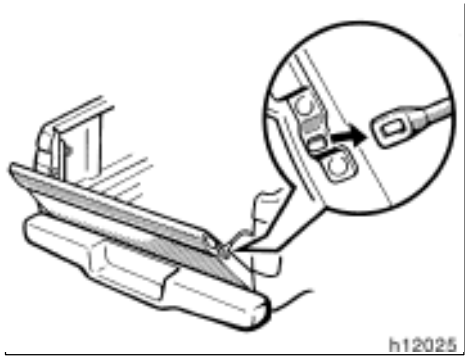

To lower the tailgate fully, release the support brackets from the lugs as shown.

NOTICE

- ***Lower the tailgate gently when it is unhooked.***
- ***Make sure the tailgate is securely caught by the support brackets before closing the tailgate.***

Hood

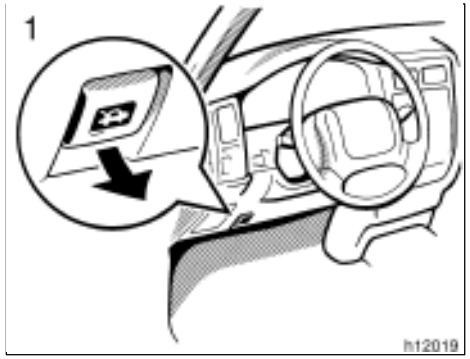

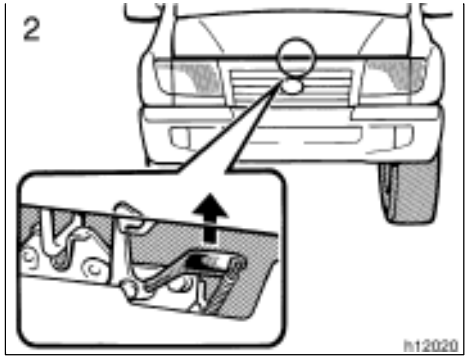

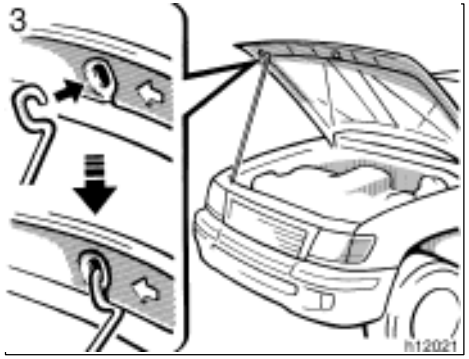

To open the hood:

1. Pull the hood lock release lever. The hood will spring up slightly.

CAUTION

Before driving, be sure that the hood is securely closed and locked. Otherwise, the hood may open unexpectedly while driving and an accident may occur.

2. In front of the vehicle, pull up the auxiliary catch lever and lift the hood.

3. Hold the hood open by inserting the support rod into the slot.

Before closing the hood, check to see that you have not forgotten any tools, rags, etc. and return the support rod to its clip—this prevents rattles. Then lower the hood and make sure it locks into place. If necessary, press down gently on the front edge to lock it.

CAUTION

After inserting the support rod into the slot, make sure the rod supports the hood securely from falling down on to your head or body.

Fuel tank cap

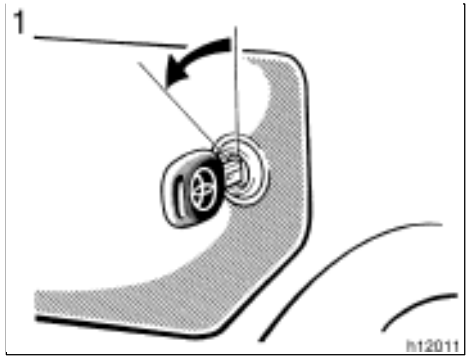

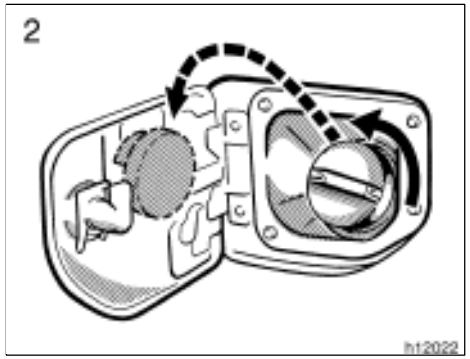

1. To open the fuel filler door, insert the key and turn it counterclockwise.

When refueling, turn off the engine.

CAUTION

- **Do not smoke, cause sparks or allow open flames when refueling. The fumes are flammable.**
- **When opening the cap, do not remove the cap quickly. In hot weather, fuel under pressure could cause injury by spraying out of the filler neck if the cap is suddenly removed.**
- **Do not fill a fuel container on a plastic truck bed liner, a rubber truck bed mat, or any other insulating material. A static electricity charge could cause a spark and fire hazard. The proper procedure is to place an approved fuel container on the ground away from the truck for filling.**

2. To remove the fuel tank cap, turn the cap slowly counterclockwise, then pause slightly before removing it. After removing the cap, hang it on the cap hanger.

It is not unusual to hear a slight swoosh when the cap is opened. When installing, turn the cap clockwise till you hear a click.

If the cap is not tightened securely, the malfunction indicator lamp comes on. Make sure the cap is tightened securely.

The indicator lamp goes off after driving several times. If the indicator lamp does not go off, contact your Toyota dealer as soon as possible.

CAUTION

- **Make sure the cap is tightened securely to prevent fuel spillage in case of an accident.**

- **Use only a genuine Toyota fuel tank cap for replacement. It has a built–in check valve to reduce fuel tank vacuum.**

Detachable moon roof—
—Moon roof precautions

CAUTION

To avoid serious personal injury, you must do the following.

- **While the vehicle is moving, always keep the head, hands and other parts of the body of all occupants away from the roof opening. Otherwise, you could be seriously injured if the vehicle stops suddenly or if the vehicle is involved in an accident.**
- **Never sit on top of the vehicle around the roof opening.**
- **Never attempt to remove the moon roof panel while driving. Otherwise, the panel may become a hazard by falling into or flying off the vehicle.**
- **After installing the moon roof panel, make sure they are firmly secured by pushing up on the underside of the panel.**
- **Never put your hands between the moon roof panel and the surrounding roof.**

—Tilting up and closing

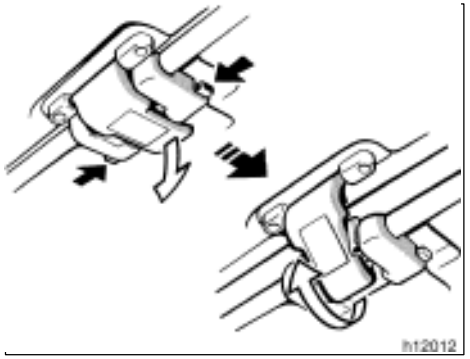

To tilt up the moon roof, first pull down on the handle while pushing in one of the lock buttons. Then push up the moon roof until it locks.

After tilting up the moon roof, make sure the handle is securely in place.

When closing the moon roof, slowly pull down the handle while supporting the roof with your hand. Close and lock the moon roof by pushing the handle. Be sure to use your palm to push the handle. After closing the moon roof, make sure it is securely locked.

—Removing

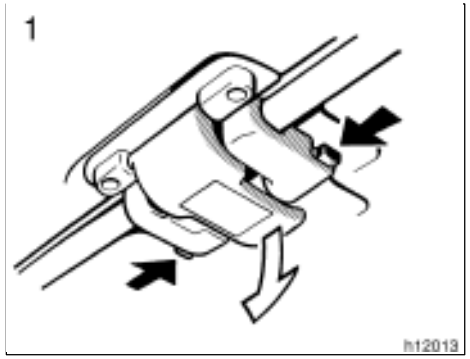

1. Pull the handle down while pushing in one of the lock buttons.

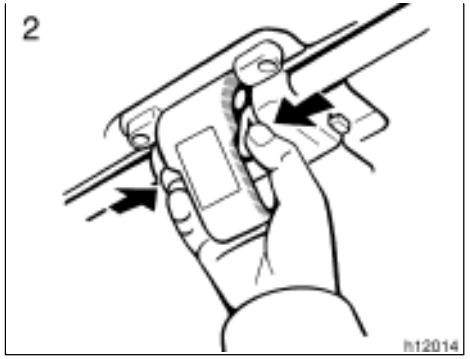

2. Push in the retaining spring arms as shown and push up the moon roof.

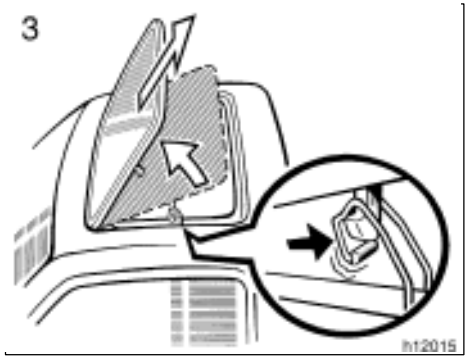

3. Push back the auxiliary catch to release it from the hook. Then lift the moon roof panel and pull it out.

—Installing

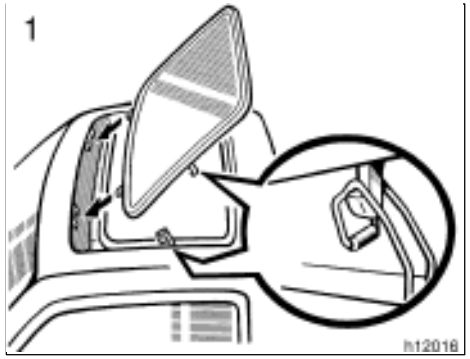

1. Insert the flat hinges of the moon roof panel into the cutouts on the body. Then slowly lower it while holding the roof with your hands.

Make sure both flat hinges are inserted into the cutouts.

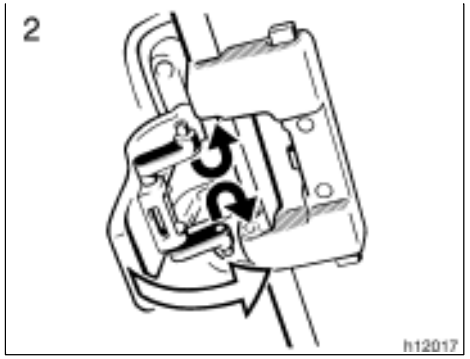

2. Press in the retaining spring arms and insert them into the holes. Then push the handle up with the palm of your hand and lock the roof.

Detachable sun shade

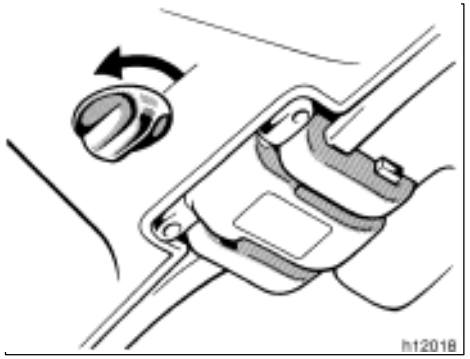

To remove: Support the sun shade panel with your hand while you unlock the sun shade by turning the knob counterclockwise.

To install: Hang the two hinges of the sun shade panel onto the hooks provided. Then push up the sun shade panel while turning the knob counterclockwise.

CAUTION

For safety, do not remove the sun shade while driving.

SECTION 1– 3

OPERATION OF INSTRUMENTS AND CONTROLS

Seats, Seat belts, Steering wheel and Mirrors

Seats 22
Front seats 22
Rear seats 25
Head restraints 25
Armrest 26
Seat belts 26
SRS driver and front passenger airbags 35
Passenger airbag manual on–off switch 44
Child restraint 45
Tilt steering wheel 65
Outside rear view mirrors 65
Anti–glare inside rear view mirror 67

Seats

While the vehicle is being driven, all vehicle occupants should have the seatback upright, sit well back in the seat and properly wear the seat belts provided.

CAUTION

- **Do not drive the vehicle unless the occupants are properly seated. Do not allow sitting on top of a folded–down seatback, or in the luggage compartment. Persons not properly seated and/or properly restrained by seat belts can be severely injured in the event of emergency braking or a collision.**
- **During driving, do not allow passengers to stand up or move around between seats. Severe injuries can occur in the event of emergency braking or a collision.**

Front seats— —Seat adjustment precautions

Adjust the driver’s seat so that the foot pedals, steering wheel and instrument panel controls are within easy reach of the driver.

CAUTION

- **Adjustments should not be made while the vehicle is moving, as the seat may unexpectedly move and cause the driver to lose control of the vehicle.**
- **When adjusting the seat, be careful not to hit the seat against a passenger or luggage.**
- **After adjusting the seat position, try sliding it forward and backward to make sure it is locked in position.**
- **After adjusting the seatback, exert body pressure to make sure it is locked in position.**
- **Do not put objects under the seats. The objects may interfere with the seat–lock mechanism or unexpectedly push up the seat position adjusting lever; the seat may suddenly move, causing the driver to lose control of the vehicle.**

- **While adjusting the seat, do not put your hands under the seat or near the moving parts. You may catch and injure your hands or fingers.**

—Adjusting front seats

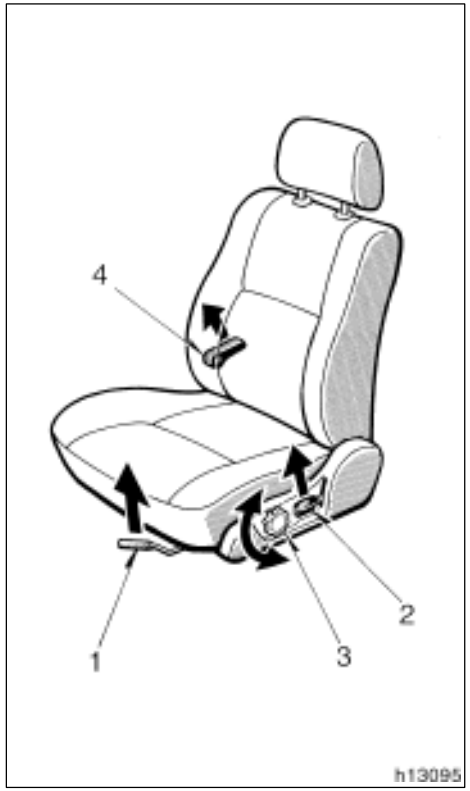

1. **SEAT POSITION ADJUSTING LEVER**
   Pull the lever up. Then slide the seat to the desired position with slight body pressure and release the lever.
2. **SEATBACK ANGLE ADJUSTING LEVER (except bench seat)**
   Lean forward and pull the lever up. Then lean back to the desired angle and release the lever.

CAUTION

To reduce the risk of sliding under the lap belt during a collision, avoid reclining the seatback any more than needed. The seat belts provide maximum protection in a frontal or rear collision when the driver and the passenger are sitting up straight and well back in the seats. If you are reclined, the lap belt may slide past your hips and apply restraint forces directly to the abdomen. Therefore, in the event of a frontal collision, the risk of personal injury may increase with increasing recline of the seatback.

3. **DRIVER'S SEAT CUSHION ANGLE ADJUSTING KNOB (on some models)**
   Turn the knob either way.
4. **DRIVER'S SEAT LUMBAR SUPPORT ADJUSTING LEVER (on some models)**
   Pull the lever forward or backward.

—Moving passenger's seat for rear seat entry (Xtra–cab models)



For easy access to the rear seat, do this.

1. Lift the seatback angle adjusting lever or press the pedal behind the seatback.

   The seat will slide forward.

2. Move the seat to the front–most position.

After passengers are in, lift up the seatback and return the seat until it locks.

CAUTION

- **After putting back the seat, try pushing the seat forward and rearward to make sure it is secured in place.**
- **Never allow anyone to rest their foot on the press pedal while the vehicle is moving.**

—Folding seatback (bench seat)

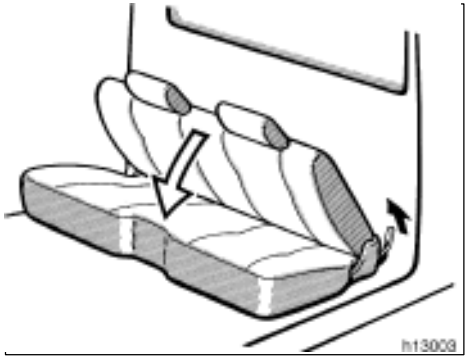

Pull the seatback lock release lever and fold down the seatback.

Hold the lever until you have swung the seatback forward slightly.

CAUTION

When returning the seatback to the upright position:

- **Make sure the seat belts are not twisted or caught in the seatback and are arranged in their proper position and are ready to use.**
- **Make sure the seatback is securely locked by pushing forward and rearward on the top of the seatback.**

Rear seats (jump seats)

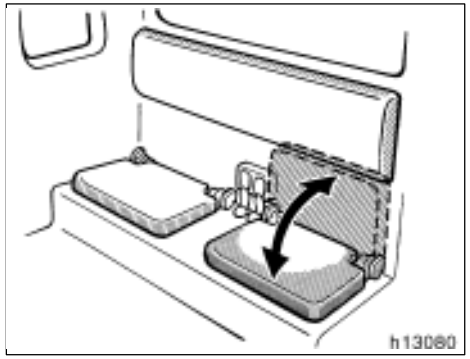

To raise the bottom cushion, pull it up. To lower the bottom cushion, push it down.

See "Luggage stowage precautions" in Section 2 for precautions to observe for loading luggage.

CAUTION

When returning the bottom cushion to its original position, make sure the seat belts are not twisted or caught under the bottom cushion and are arranged in their proper position and are ready to use.

Head restraints

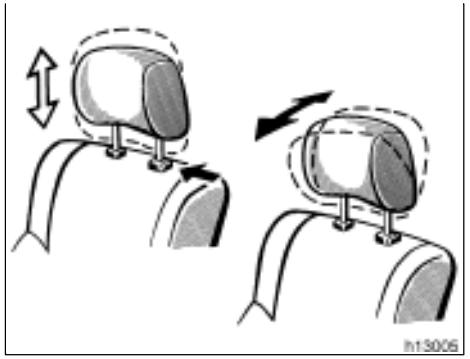

For your safety and comfort, adjust the head restraint before driving.

To raise: Pull it up.
To lower: Push it down while pressing the lock release button.

On some models, you can also move the head restraint forward or backward. If such adjustment is desired, pull or push the head restraint.

The head restraint is most effective when it is close to your head. Therefore, using a cushion on the seatback is not recommended.

CAUTION

- **Adjust the center of the head restraint so that it is closest to the top of your ears.**
- **After adjusting the head restraint, make sure it is locked in position.**
- **Do not drive with the head restraints removed.**

Armrest

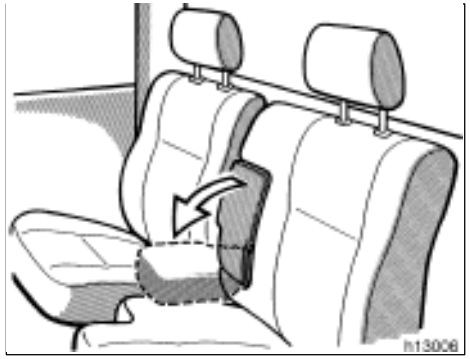

To use the armrest, pull it out as shown above.

NOTICE
To prevent damage to the armrest, avoid putting heavy loads on it.

Seat belts— —Seat belt precautions

Toyota strongly urges that the driver and passengers in the vehicle be properly restrained at all times with the seat belts provided. Failure to do so could increase the chance of injury and/or the severity of injury in accidents.

Child. Use a child restraint system appropriate for the child until the child becomes large enough to properly wear the vehicle's seat belts. See "Child restraint" for details.

NORMAL–CAB MODELS—
If a child is too large for a child restraint system, the child should sit in the seat and must be restrained using the vehicle's seat belt.

XTRA–CAB MODELS—
If a child is too large for a child restraint system, the child should sit in the rear seat and must be restrained using the vehicle's seat belt. According to accident statistics, the child is safer when properly restrained in the rear seat than in the front seat.

If a child must sit in the front seat, the seat belts should be worn properly. If an accident occurs and the seat belts are not worn properly, the force of the rapid inflation of the airbag may cause death or serious injury to the child.

Do not allow the child to stand up or kneel on either rear or front seats. An unrestrained child could suffer serious injury or death during emergency braking or a collision. Also, do not let the child sit on your lap. It does not provide sufficient restraint.

Small–framed person or youth in a 3–point type seat belt. On models with a bench seat, have a small–framed person or youth sit slightly closer to the center of the vehicle (so the shoulder belt does not cross over the neck). On models with separate seats, move the seat fully backward**.**

Pregnant woman. Toyota recommends the use of a seat belt. Ask your doctor for specific recommendations. The lap belt should be worn securely and as low as possible over the hips and not on the waist.

Injured person. Toyota recommends the use of a seat belt. Depending on the injury, first check with your doctor for specific recommendations

CAUTION

Persons should ride in their seats properly wearing their seat belts whenever the vehicle is moving. Otherwise, they are much more likely to suffer serious bodily injury or death in the event of sudden braking or a collision.

When using the seat belts, observe the following:

- **Use the belt for only one person at a time. Do not use a single belt for two or more people—even children.**
- **Avoid reclining the seatbacks too much. The seat belts provide maximum protection when the seatbacks are in the upright position. (Refer to the seat adjustment instructions.)**
- **Be careful not to damage the belt webbing or hardware. Take care that they do not get caught or pinched in the seat or side doors.**
- **Inspect the belt system periodically. Check for cuts, fraying, and loose parts. Damaged parts should be replaced. Do not disassemble or modify the system.**
- **Keep the belts clean and dry. If they need cleaning, use a mild soap solution or lukewarm water. Never use bleach, dye, or abrasive cleaners—they may severely weaken the belts. (See “Cleaning the interior” in Section 5.)**
- **Replace the belt assembly (including bolts) if it has been used in a severe impact. The entire assembly should be replaced even if damage is not obvious.**

—Front outside seat belts and rear seat belts



Adjust the seat as needed (front seats only) and sit up straight and well back in the seat. To fasten your belt, pull it out of the retractor and insert the tab into the buckle.

You will hear a click when the tab locks into the buckle.

The seat belt length automatically adjusts to your size and the seat position.

The retractor will lock the belt during a sudden stop or on impact. It also may lock if you lean forward too quickly. A slow, easy motion will allow the belt to extend, and you can move around freely.

If the seat belt cannot be pulled out of the retractor, firmly pull the belt and release it. You will then be able to smoothly pull the belt out of the retractor.

When a passenger’s shoulder belt is completely extended and is then retracted even slightly, the belt is locked in that position and cannot be extended. This feature is used to hold the child restraint system securely. (For details, see “Child restraint” in this section.) To free the belt again, fully retract the belt and then pull the belt out once more.

CAUTION

- **After inserting the tab, make sure the tab and buckle are locked and that the belt is not twisted.**
- **Do not insert coins, clips, etc. in the buckle as this may prevent you from properly latching the tab and buckle.**
- **If the seat belt does not function normally, immediately contact your Toyota dealer. Do not use the seat until the seat belt is fixed. It cannot protect an adult occupant or your child from injury.**

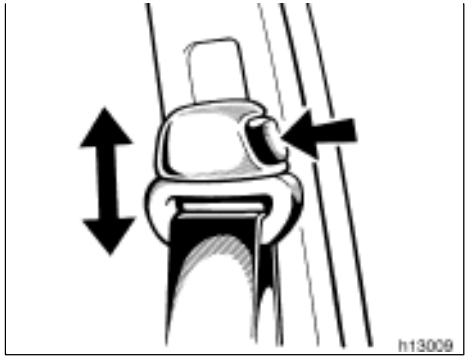

Seat belts with an adjustable shoulder anchor—

Adjust the shoulder anchor position to your size.

To raise: Slide the anchor up.
To lower: Push in the lock release button and slide the anchor down.

After adjustment, make sure the anchor is locked in position.

CAUTION

Always make sure the shoulder belt is positioned across the center of your shoulder. The belt should be kept away from your neck, but not falling off your shoulder. Failure to do so could reduce the amount of protection in an accident and cause severe injuries in a collision.

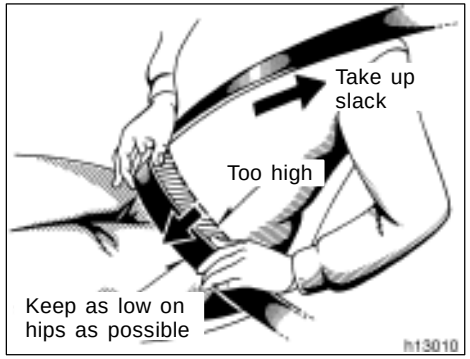

Adjust the position of the lap and shoulder belts.

Position the lap belt as low as possible on your hips—not on your waist, then adjust it to a snug fit by pulling the shoulder portion upward through the latch plate.

CAUTION

- **High–positioned lap belts and loose–fitting belts both could cause serious injuries due to sliding under the lap belt during a collision or other unintended result. Keep the lap belt positioned as low on hips as possible.**
- **For your safety, do not place the shoulder belt under your arm.**



To release the belt, press the buckle–release button and allow the belt to retract.

If the belt does not retract smoothly, pull it out and check for kinks or twists. Then make sure it remains untwisted as it retracts.

—Front center seat belt

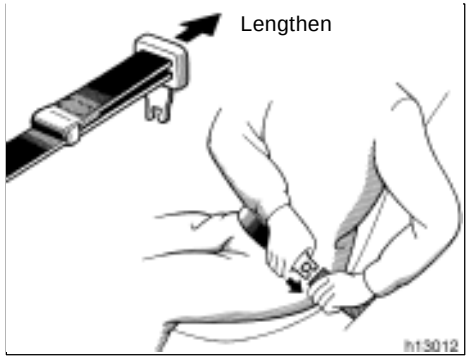

Sit up straight and well back in the seat. To fasten your belt, insert the tab into the buckle.

You will hear a click when the tab locks into the buckle.

If the belt is not long enough for you, hold the tab at a right angle to the belt and pull on the tab.

CAUTION

- **After inserting the tab, make sure the tab and buckle are locked and that the belt is not twisted.**
- **Do not insert coins, clips, etc. in the buckle as this may prevent you from properly latching the tab and buckle.**
- **If the seat belt does not function normally, immediately contact your Toyota dealer. Do not use the seat until the seat belt is fixed. It cannot protect an adult occupant or your child from injury.**

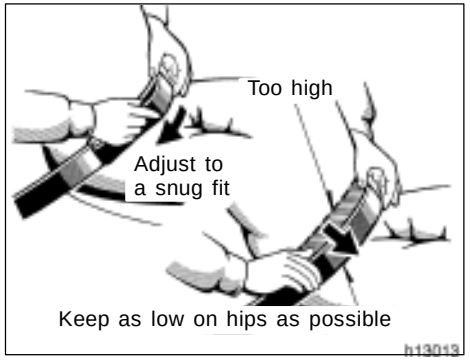

Remove excess length of the belt and adjust the belt position.

To shorten the belt, pull the free end of the belt.

Position the lap belt as low as possible on your hips—not on your waist, then adjust it to a snug fit.

CAUTION

High–positioned and loose–fitting lap belts could cause serious injuries due to sliding under the lap belt during a collision or other unintended result. Keep the lap belt positioned as low on hips as possible.



To release the belt, press the buckle–release button.

—Stowing the rear seat buckles

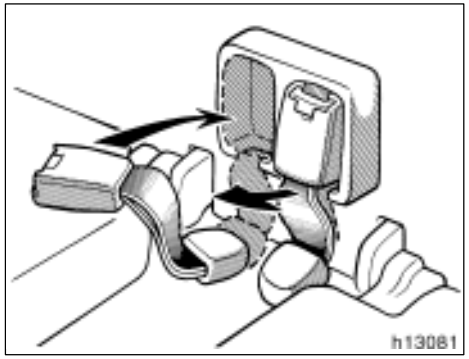

The buckles can be fixed when not in use.

When taking out the buckle from the holder, pull on the belt webbing to remove the buckle from the lower portion.

—Seat belt extender

If your seat belt cannot be fastened securely because it is not long enough, a personalized seat belt extender is available from your Toyota dealer free of charge.

Please contact your local Toyota dealer so that the dealer can order the proper required length for the extender. Bring the heaviest coat you expect to wear for proper measurement and selection of length. Additional ordering information is available at your Toyota dealer.

CAUTION

When using the seat belt extender, observe the following. Failure to follow these instructions could result in less effectiveness of the seat belt restraint system in case of vehicle accident, increasing the chance of personal injury.

- **Never use the seat belt extender if you can fasten the seat belt without it.**

- **Remember that the extender provided for you may not be safe when used on a different vehicle, or for another person or at a different seating position than the one originally intended for.**



To connect the extender to the seat belt, insert the tab into the seat belt buckle so that the “PRESS” signs on the buckle–release buttons of the extender and the seat belt are both facing outward as shown.

You will hear a click when the tab locks into the buckle.

When releasing the seat belt, press on the buckle–release button on the extender, not on the seat belt. This helps prevent damage to the vehicle interior and extender itself.

When not in use, remove the extender and store in the vehicle for future use.

CAUTION

- **After inserting the tab, make sure the tab and buckle are locked and that the seat belt extender is not twisted.**
- **Do not insert coins, clips, etc. in the buckle as this may prevent you from properly latching the tab and buckle.**
- **If the seat belt does not function normally, immediately contact your Toyota dealer. Do not use the seat until the seat belt is fixed. It cannot protect an adult occupant or your child from injury.**

—Front seat belt pretensioners

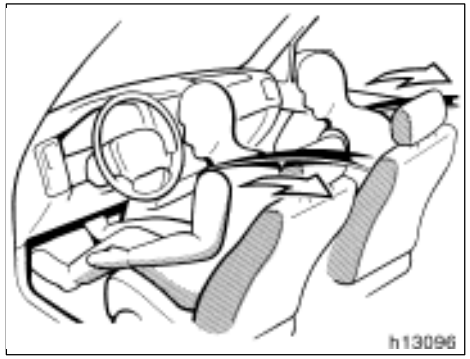

The driver and front passenger’s seat belt pretensioners are designed to be activated in response to a severe frontal impact.

When the airbag sensor detects the shock of a severe frontal impact, the front seat belt is quickly drawn back in by the retractor so that the belt snugly restrains the front seat occupants.

The seat belt pretensioners are activated even with no passenger in the front seat.

Collisions occurring at certain speeds and angles may cause the seat belt pretensioners and SRS airbags not to operate all together.



This indicator comes on when the ignition key is turned to the “ACC” or “ON” position. It goes off after about 6 seconds. This means the front seat belt pretensioners are operating properly.

This warning light system monitors the airbag sensor assembly, front airbag sensors, seat belt pretensioner assemblies, warning light, interconnecting wiring and power sources. (For details, see “Service reminder indicators and warning buzzers” in Section 1–5.)

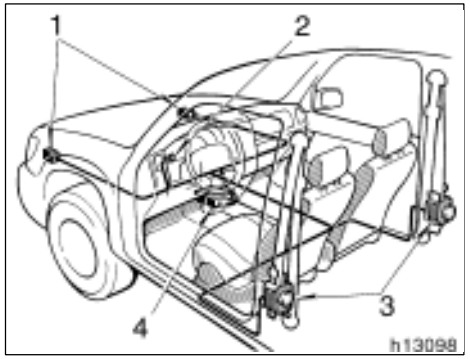

The seat belt pretensioner system mainly consists of the following components and their locations are shown in the illustration.

1. Front airbag sensors
2. SRS warning light
3. Seat belt pretensioner assemblies
4. Airbag sensor assembly

The seat belt pretensioner is controlled by the airbag sensor assembly. The airbag sensor assembly consists of a safing sensor and airbag sensor.

When a seat belt pretensioner is activated, an operating noise may be heard and a small amount of smoke–like gas may be released. This gas is harmless and does not indicate that a fire is occurring.

Once the seat belt pretensioner has been activated, the seat belt retractor remains locked.

CAUTION

Do not modify, remove, strike or open the front seat belt pretensioner assemblies, airbag sensor or surrounding area or wiring. Doing any of these may cause sudden operation of the front seat belt pretensioners or disable the system, which could result in death or serious personal injury.

Failure to follow these instructions can result in death or serious injuries.

NOTICE

Do not perform any of the following changes without consulting your Toyota dealer. Such changes can interfere with proper operation of the seat belt pretensioners in some cases.

- ***Installation of electronic devices such as a mobile two–way radio, cassette tape player or compact disc player***
- ***Repairs on or near the front seat belt pretensioner assemblies***
- ***Modification of the suspension system***
- ***Modification of the front end structure***
- ***Attachment of a grille guard (bull bar, kangaroo bar, etc.), snowplow, winches or any other equipment to the front end***
- ***Repairs made on or near the front fenders, front end structure or console***

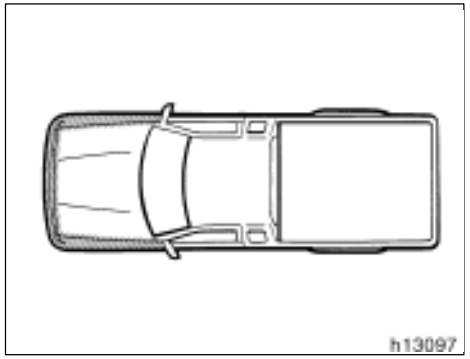

This front seat belt pretensioner system has a service reminder indicator to inform the driver of operating problems. If either of the following conditions occurs, this indicates a malfunction of the airbags or pretensioners. Contact your Toyota dealer as soon as possible to service the vehicle.

- The light does not come on when the ignition key is turned to the “ACC” or “ON” position, or remains on.
- The light comes on or flashes while driving.
- If either front seat belt does not retract or can not be pulled out due to a malfunction or activation of the pretensioner.

- The front seat belt pretensioner assembly or surrounding area has been damaged.
- The front part of the vehicle (shaded in the illustration) was involved in an accident that did not cause the seat belt pretensioners to operate.
- The front seat belt pretensioner assembly is scratched, cracked, or otherwise damaged.

SRS driver and front passenger airbags

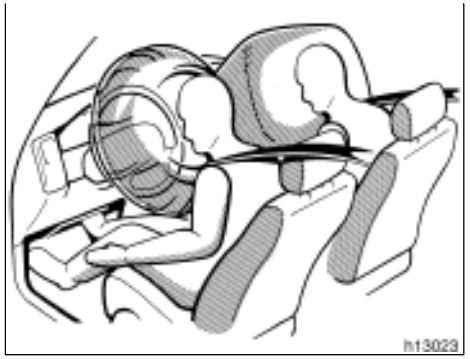

The SRS (Supplemental Restraint System) airbags are designed to provide further protection for occupants in the following seats in addition to the primary safety protection provided by the seat belts.

- Models with separate front seats—The SRS airbags are designed to protect the driver and front passenger.
- Models with bench front seats—The SRS airbags are designed to protect the driver and right–front passenger. They are not designed to protect occupant in the center position.

In response to a severe frontal impact, the SRS airbags work together with the seat belts to help prevent or reduce injury by inflating. The SRS airbags help to reduce injuries mainly to the driver’s or front passenger’s head or chest directly hitting the steering wheel or dashboard. When the passenger airbag manual on–off switch is in the “ON” position, the passenger airbag is activated even with no passenger in the front seat.

Be sure to wear your seat belt.

CAUTION

A driver or front passenger too close to the steering wheel or dashboard during airbag deployment can be killed or seriously injured. Toyota strongly recommends that:

- **The driver sit as far back as possible from the steering wheel while still maintaining control of the vehicle.**
- **The front passenger sit as far back as possible from the dashboard.**
- **All vehicle occupants be properly restrained using the available seat belts.**



The passenger airbag system is equipped with a manual on–off switch and indicator light. Turning the passenger airbag manual on–off switch clockwise to the “ON” position makes the passenger airbag system operational. Turning the passenger airbag manual on–off switch counterclockwise to the “OFF” position disables the passenger airbag system. The indicator light on the passenger airbag manual on–off switch will come on when the passenger airbag system has been disabled.

See “Passenger airbag manual on–off switch” in this section for detail.

CAUTION

- **Make sure that the indicator light is off.**
- **Do not turn off the passenger airbag manual on–off switch except when a member of a passenger risk group identified in TABLE 1 is occupying the right front passenger seating position.**
- **When the passenger airbag manual on–off switch is turned off, the passenger airbag will not inflate in a collision and turning off the passenger airbag can reduce the occupant protection which your vehicle safety systems can provide to you in certain accidents and increase the likelihood of serious personal injuries.**

TABLE 1: A PASSENGER RISK GROUP
Infant. An infant (less than 1 year old) who must ride in the front seat because: ● Vehicle has no rear seat; ● Vehicle has a rear seat too small to accommodate a rear–facing infant seat; or ● The infant has a medical condition which, according to the infant’s physician, makes it necessary for the infant to ride in the front seat so that the driver can constantly monitor the child’s condition.
Child age 1 to 12. A child age 1 to 12 must ride in the front seat because: ● Vehicle has no rear seat: ● Although children ages 1 to 12 ride in the rear seat(s) whenever possible, children ages 1 to 12 sometimes must ride in the front because no space is available in the rear seat(s) of vehicle; or ● The child has a medical condition which, according to the child’s physician, makes it necessary for the child to ride in the front seat so that the driver can constantly monitor the child’s condition.
Medical condition. A passenger has a medical condition which according to his or her physician: ● Causes the passenger airbag to pose a special risk for the passenger: and ● Makes the potential harm from the passenger airbag in a crash greater than the potential harm from turning off the airbag and allowing the passenger, even if belted, to hit the dashboard, or windshield in a crash.

For more detailed information concerning about the passenger risk group, please contact NHTSA at 1–800–424–9393 or Transport Canada at 1–800–333–0371.



This indicator comes on when the ignition key is turned to the “ACC” or “ON” position. It goes off after about 6 seconds. This means the SRS airbags are operating properly.

This warning light system monitors the airbag sensor assembly, front airbag sensors inflators, warning light, interconnecting wiring and power sources. (For details, see “Service remainder indicators and warning buzzers” in Section 1–5.)

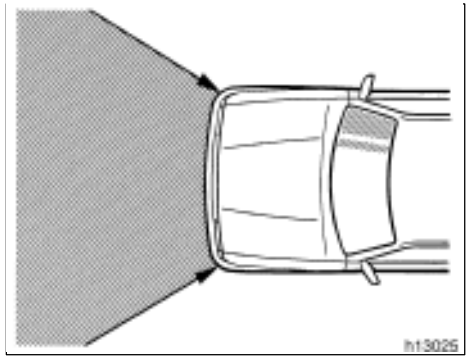

The SRS airbag system is designed to activate in response to a severe frontal impact within the shaded area between the arrows in the illustration.

The SRS airbags will deploy if the severity of the impact is above the designed threshold level, comparable to an approximate 25 km/h (15 mph) collision when impacting straight into a fixed barrier that does not move or deform.

If the severity of the impact is below the above threshold level, the SRS airbags may not deploy.

However, this threshold velocity will be considerably higher if the vehicle strikes an object, such as a parked vehicle or sign pole, which can move or deform on impact, or if it is involved in an underride collision (e.g. a collision in which the nose of the vehicle “underrides”, or goes under, the bed of a truck, etc.).

It is possible that in some collisions at the lower zone of airbag sensor detection and activation the SRS airbags and seat belt pretensioners will not operate all together.

For the safety of all occupants, always wear your seat belts.

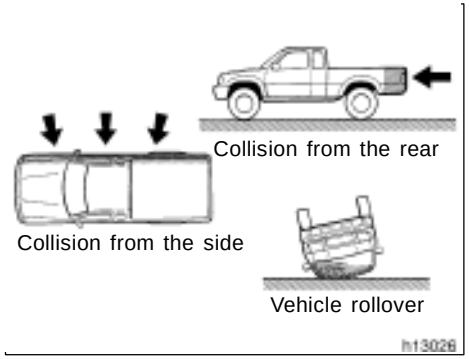

The SRS airbags are not designed to inflate if the vehicle is involved in a side or rear collision, if it rolls over, or if it is involved in a low–speed frontal collision.

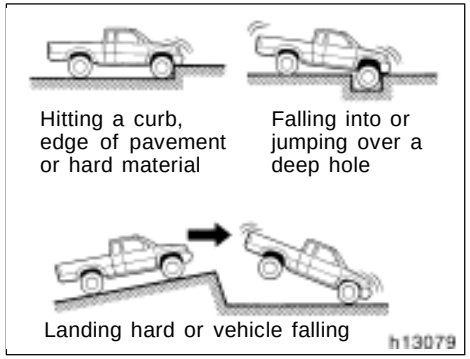

The SRS airbags may deploy if a serious impact occurs to the underside of your vehicle. Some examples are shown in the illustration.

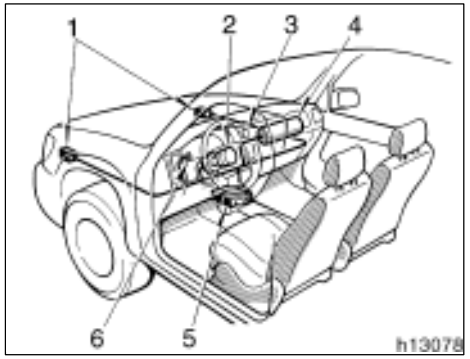

The SRS airbag system consists mainly of the following components, and their locations are shown in the illustration.

1. Front airbag sensors
2. Airbag module for driver (airbag and inflator)
3. Passenger airbag manual on–off switch
4. Airbag module for passenger (airbag and inflator)
5. Airbag sensor assembly
6. SRS warning light

The airbag sensor assembly consists of a safing sensor and airbag sensor.

In a severe frontal impact, sensors detect deceleration and the system triggers the airbag inflators. Then a chemical reaction in the inflators quickly fills the airbags with non–toxic gas to help restrain the forward motion of the occupants.

When the airbags inflate, they produce a fairly loud noise and release some smoke and residue along with non–toxic gas. This does not indicate a fire. This gas is normally harmless; however, for those who have delicate skin, it may cause a minor skin irritation. Be sure to wash off any residue as soon as possible to prevent any potential skin irritation.

Deployment of the airbags happens in a fraction of a second, so the airbags must inflate with considerable force. While the system is designed to reduce serious injuries, it may also cause minor burns or abrasions and swelling.

Parts of the airbag module (steering wheel hub, dashboard) may be hot for several minutes, but the airbags themselves will not be hot. The airbags are designed to inflate only once.

A crash severe enough to inflate the airbags may break the windshield as the vehicle buckles. In vehicles with a passenger airbag the windshield may also be damaged by absorbing some of the force of the inflating airbag.

CAUTION

- **The SRS airbag system is designed only as a supplement to the primary protection of the driver side and front passenger side seat belt systems. The front seat occupants can be killed or seriously injured by an inflating airbag if they do not wear the available seat belts. During sudden braking just before a collision, an unrestrained driver or front passenger can move forward into direct contact with or close proximity to the airbag which may then deploy during the collision. To ensure maximum protection in an accident, the driver and all passengers in the vehicle must wear their seat belts. Wearing a seat belt during an accident reduces the chances of death or serious injury or being thrown out of the vehicle. For instructions and precautions concerning the seat belt system, see "Seat belts" in this section.**
- **Improperly seated and/or restrained infants and children can be killed or seriously injured by a deploying airbag. An infant or child who is too small to use a seat belt should be properly secured using a child restraint system. As to double cab models, Toyota recommends that all infants and children be placed in the rear seat of the vehicle and properly restrained. The rear seat is the safest for infants and children. For instructions concerning the installation of a child restraint system, see "Child restraint" in this section.**

CAUTION

A member of a passenger risk group should never sit or be occupied in the right front passenger seat with airbag manual on–off switch in the “ON” position. (For details, see “SRS driver and front passenger airbags” in this section.)



CAUTION

- Never put a rear–facing child restraint system on the right front seat with the passenger airbag manual on–off switch in the “ON” position. In the event of an accident, the force of the rapid inflation of the passenger airbag can cause death or serious injury to the child.

- A forward–facing child restraint system which belongs to a passenger risk group should never be put on the right front seat with the passenger airbag manual on–off switch in the “ON” position, because the force of a deploying airbag could cause death or serious injury to the child in forward seating position.

  For instructions concerning the installation of a child restraint system, see “Child restraint” in this section.



- Do not sit on the edge of the seat or lean over the dashboard when the vehicle is in use. The airbags inflate with considerable speed and force; you may be killed or seriously injured. Sit up straight and well back in the seat, and always use your seat belt.



- Do not allow a child to stand up, or to kneel on the front passenger seat. The airbag inflates with considerable speed and force; the child may be killed or seriously injured.
- Do not hold a child on your lap or in your arms. Use a child restraint system in the rear seat. For instructions concerning the installation of a child restraint system, see “Child restraint” in this section.



- Do not put objects or your pets on or in front of the dashboard or steering wheel pad that houses the airbag system. They might restrict inflation or cause death or serious injury as they are projected rearward by the force of deploying airbags. Likewise, the driver and front passenger should not hold things in their arms or on their knees.

- **Do not modify or remove any wiring. Do not modify, remove, strike or open any components, such as the steering wheel pad, steering wheel, column cover, front passenger airbag cover, front passenger airbag or airbag sensor assembly. Doing any of these may cause sudden SRS airbag inflation or disable the system, which could result in death or serious injury.**

Failure to follow these instructions can result in death or serious injury.

NOTICE

Do not perform any of the following changes without consulting your Toyota dealer. Such changes can interfere with proper operation of the SRS airbag system in some cases.

- ***Installation of electronic devices such as a mobile two–way radio, cassette tape player or compact disc player***
- ***Modification of the suspension system***
- ***Modification of the front end structure***
- ***Attachment of a grille guard (bull bar, kangaroo bar, etc.), snowplow, winches or any other equipment to the front end***
- ***Repairs made on or near the front fenders, front end structure, console, steering column, steering wheel or dashboard near the front passenger airbag***



This SRS airbag system has a service reminder indicator to inform the driver of operating problems. If either of the following conditions occurs, this indicates a malfunction of the airbags. Contact your Toyota dealer as soon as possible to service the vehicle.

- The light does not come on when the ignition key is turned to the “ACC” or “ON” position, or the light remains on.
- The light comes on while driving.

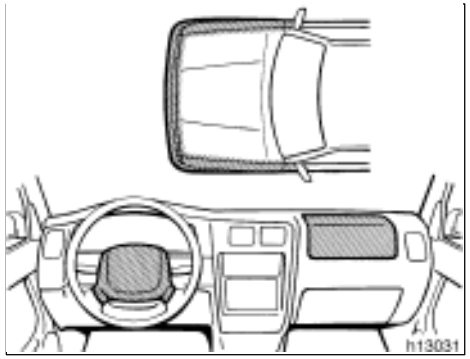

In the following cases, contact your Toyota dealer as soon as possible:

- The SRS airbags have been inflated.
- The front part of the vehicle (shaded in the illustration) was involved in an accident that was not severe enough to cause the SRS airbags to inflate.
- The pad section of the steering wheel or front passenger airbag cover (shaded in the illustration) is scratched, cracked, or otherwise damaged.

NOTICE

Do not disconnect the battery cables before contacting your Toyota dealer.

Passenger airbag manual on–off switch

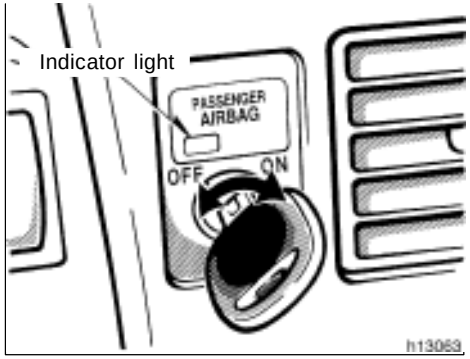

This on–off switch is designed to disable the passenger airbag in order to allow usage, if necessary, of a member of a passenger risk group identified in TABLE 1 is occupying the right front passenger seating position. (For details, see “SRS driver and front passenger airbags” in this section.)

Operate on–off switch as follows:

Insert key into the keyhole and turn it.

To turn passenger airbag on: Turn the key clockwise to the “ON” position.
To turn passenger airbag off: Turn the key counterclockwise to the “OFF” position.

The indicator comes on when the passenger airbag system is off.

CAUTION

- **Make sure that the indicator light is off.**
- **Do not turn off the passenger airbag manual on–off switch except when a member of a passenger risk group identified in TABLE 1 is occupying the right front passenger seating position.**
- **When the passenger airbag manual on–off switch is turned off, the passenger airbag will not inflate in a collision and turning off the passenger airbag can reduce the occupant protection which your vehicle safety systems can provide to you in certain accidents and increase the likelihood of serious personal injuries.**

For details, see “SRS driver and front passenger airbags” in this section.

Child restraint—
—Child restraint precautions

Toyota strongly urges the use of child restraint systems for children small enough to use them.

The laws of all fifty states in the U.S.A. and Canada now require the use of a child restraint system.

Your vehicle conforms to SAEJ1819.

If a child is too large for a child restraint system, the child should sit in the seat and must be restrained using the vehicle’s seat belt. See “Seat belts” for details.

CAUTION

- **For effective protection in automobile accidents and sudden stops, children must be properly restrained using a seat belt or child restraint system depending on the age and size of the child. Holding a child in your arms is not a substitute for a child restraint system. In an accident, the child can be crushed against the windshield, or between you and the vehicle’s interior.**
- **NORMAL–CAB MODELS—**
  Toyota strongly urges use of a proper child restraint system which conforms to the size of the child.

  XTRA–CAB MODELS—
  Toyota strongly urges use of a proper child restraint system which conforms to the size of the child and is put on the rear seat. According to accident statistics, the child is safer when properly restrained in the rear seat than in the front seat.
- **Never put infant or child age 1 to 12 in a passenger risk group on the right front seat with the passenger airbag manual on–off switch in the “ON” position. In the event of an accident, the force of the rapid inflation of the passenger airbag can cause death or serious injury to the child.**

  If you must put infant or child age 1 to 12 in a passenger risk group on the right front seat, make sure the passenger airbag manual on–off switch is in the “OFF” position and that the indicator light is on. (For details, see “SRS driver and front passenger airbags” in this section.)
- **Make sure that you have complied with all installation instructions provided by the child restraint manufacturer and that the system is properly secured.**

—Child restraint system

A child restraint system for a small child or baby must itself be properly restrained on the seat with either the lap belt or the lap portion of the lap/ shoulder belt. You must carefully consult the manufacturer’s instructions which accompany the child restraint system.

To provide proper restraint, use a child restraint system following the manufacturer’s instructions about the appropriate age and size of the child for the child restraint system.

Install the child restraint system correctly following the instructions provided by its manufacturer of the system. General directions are also provided under the following illustrations.

The child restraint system should be installed on the rear seat if your vehicle is equipped with rear seats. According to accident statistics, the child is safer when properly restrained in the rear seat than in the front seat.

CAUTION

- **Never put infant or child age 1 to 12 in a passenger risk group on the right front seat with the passenger airbag manual on–off switch in the “ON” position. In the event of an accident, the force of the rapid inflation of the passenger airbag can cause death or serious injury to the child.**

  If you must put infant or child age 1 to 12 in a passenger risk group on the right front seat, make sure the passenger airbag manual on–off switch is in the “OFF” position and that the indicator light is on. (For details, see “SRS driver and front passenger airbags” in this section.)
- **After installing the child restraint system, make sure it is secured in place according to the manufacturer’s instructions. If it is not restrained securely, it may cause death or serious injury to the child in the event of a sudden stop or accident.**

When not using the child restraint system, keep it secured with the seat belt. This will prevent it from injuring passengers in the event of a sudden stop or accident.

—Types of child restraint system

Child restraint systems are classified into the following 3 types depending on the child's age and size.

(A) Infant seat
(B) Convertible seat
(C) Booster seat

Install the child restraint system following the instructions provided by its manufacturer.



(A) Infant seat



(C) Booster seat



(B) Convertible seat

—Installation with 2–point type seat belt

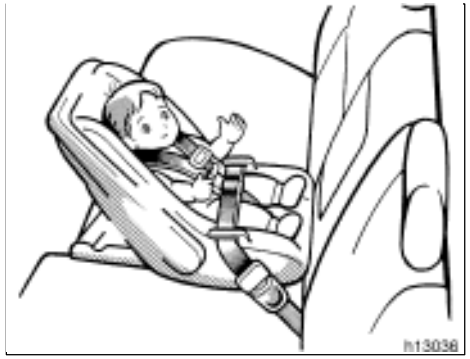

(A) INFANT SEAT INSTALLATION

An infant seat is used in rear–facing position only.

With the child restraint system installed, check that your driving position is satisfactory and that the child restraint system does not interfere with your driving.

If your driving position is not satisfactory, or the child restraint system interferes with your driving, install it at another position.

Split bench seat—
Adjust the passenger’s seat forward and rearward travel as well as seatback position so that the child restraint system is securely restrained.

CAUTION

Ignoring the above instructions may result in a serious injury in case of an accident.



CAUTION

Never put a rear–facing child restraint system on the front seat with the passenger airbag manual on–off switch in the “ON” position. In the event of an accident, the force of the rapid inflation of the passenger airbag can cause death or serious injury to the child.

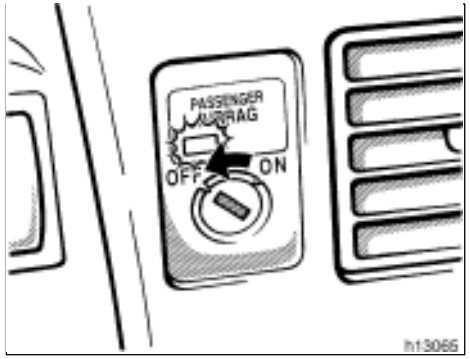

When you put a rear–facing child restraint system on the front seat, turn the passenger airbag manual on–off switch counterclockwise to the “OFF” position. (For details, see “SRS driver and front passenger airbags” in this section.)

The indicator comes on when the system is off.

CAUTION

If you must put a rear–facing child restraint system on the front seat, make sure the passenger airbag manual on–off switch is in the “OFF” position and that the indicator light is on.

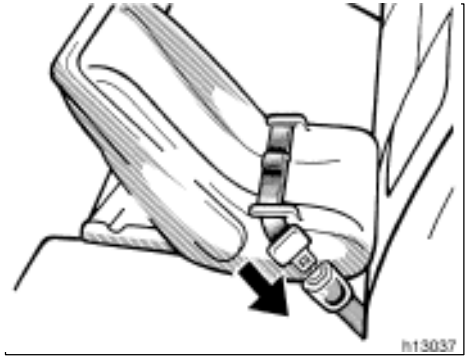

1. Run the center lap belt through or around the infant seat following the instructions provided by its manufacturer and insert the tab into the buckle taking care not to twist the lap belt.

CAUTION

- **After inserting the tab, make sure the tab and buckle are locked and that the lap belt is not twisted.**
- **Do not insert coins, clips, etc. in the buckle as this may prevent you from properly latching the tab and buckle.**
- **If the seat belt does not function normally, it cannot protect your child from injury. Contact your Toyota dealer immediately. Do not use the seat until the seat belt is fixed.**

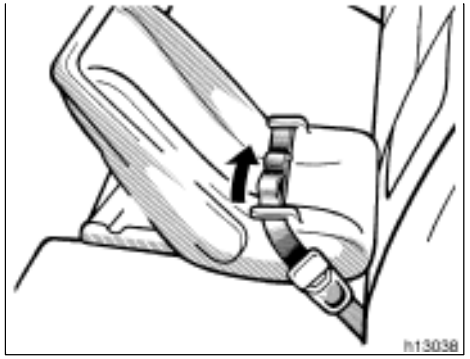

2. While pressing the infant seat firmly against the seat cushion and seatback, tighten the lap belt by pulling its free end to hold the infant seat securely.

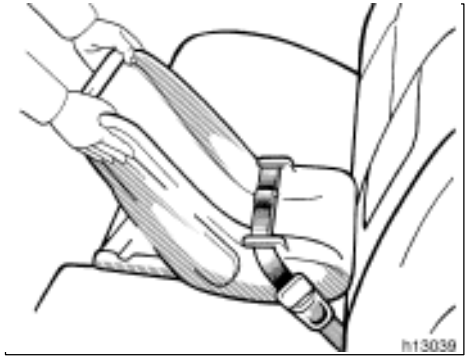

CAUTION

Push and pull the child restraint system in different directions to be sure it is secure. Follow all the installation instructions provided by its manufacturer.



3. To remove the infant seat, press the buckle–release button.



(B) CONVERTIBLE SEAT INSTALLATION

A convertible seat is used in forward–facing and rear–facing position depending on the child’s age and size. When installing, follow the manufacturer’s instructions about the applicable child’s age and size as well as directions for installing a child restraint system.

With the child restraint system installed, check that your driving position is satisfactory and that the child restraint system does not interfere with your driving.

If your driving position is not satisfactory, or the child restraint system interferes with your driving, install it at another position.

Split bench seat—
Adjust the passenger seat forward and rearward travel as well as seatback position so that the child restraint system is securely restrained.

CAUTION

Ignoring the above instructions may result in a serious injury in case of an accident.



CAUTION

Rear–facing child restraint system: Never put a rear–facing child restraint system on the front seat with the passenger airbag manual on–off switch in the “ON” position. In the event of an accident, the force of the rapid inflation of the passenger airbag can cause death or serious injury to the child.

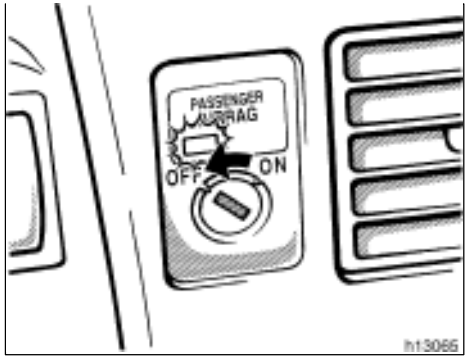

When you put a rear–facing child restraint system on the front seat, turn the passenger airbag manual on–off switch counterclockwise to the “OFF” position. (For details, see “SRS driver and front passenger airbags” in this section.)

The indicator comes on when the system is off.

CAUTION

If you must put a rear–facing child restraint system on the front seat, make sure the passenger airbag manual on–off switch is in the “OFF” position and that the indicator light is on.

CAUTION

Forward–facing child restraint system: A forward–facing child restraint system should never be put on the front seat with the passenger airbag manual on–off switch in the "ON" position, because the force of a deploying airbag could cause death or serious injury to the child in forward seating position.



1. Run the center lap belt through or around the convertible seat following the instructions provided by its manufacturer and insert the tab into the buckle taking care not to twist the lap belt.

CAUTION

- **After inserting the tab, make sure the tab and buckle are locked and that the lap belt is not twisted.**
- **Do not insert coins, clips, etc. in the buckle as this may prevent you from properly latching the tab and buckle.**
- **If the seat belt does not function normally, it cannot protect your child from injury. Contact your Toyota dealer immediately. Do not use the seat until the seat belt is fixed.**



2. While pressing the convertible seat firmly against the seat cushion and seatback, tighten the lap belt by pulling its free end to hold the convertible seat securely.



CAUTION

Push and pull the child restraint system in different directions to be sure it is secure. Follow all the installation instructions provided by its manufacturer.



3. To remove the convertible seat, press the buckle–release button.

—Installation with 3–point type seat belt

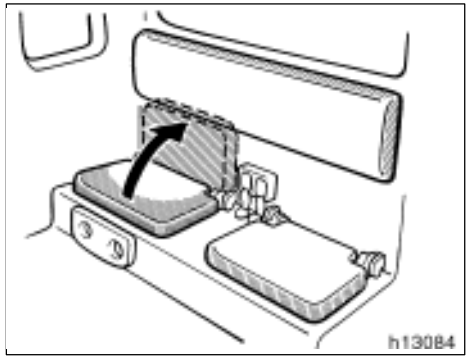

WHEN INSTALLING ON THE REAR SEAT (Xtra–cab models):

Raise the bottom cushion before installing the child restraint system.

If your child restraint system is too large, you can use the folding table as an auxiliary support. For instructions about how to stand the table, see “Cup holder (Xtra–cab models)” in Section 1–9.

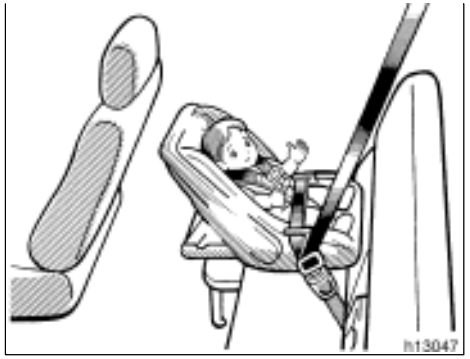

(A) INFANT SEAT INSTALLATION

An infant seat is used in rear–facing position only.



CAUTION

Never put a rear–facing child restraint system on the right front seat with the passenger airbag manual on–off switch in the “ON” position. In the event of an accident, the force of the rapid inflation of the passenger airbag can cause death or serious injury to the child.

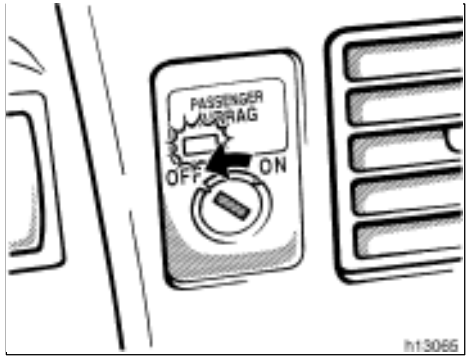

When you put a rear–facing child restraint system which belongs to a passenger risk group on the right front seat, turn the passenger airbag manual on–off switch counterclockwise to the “OFF” position. (For details, see “SRS driver and front passenger airbags” in this section.)

The indicator comes on when the system is off.

CAUTION

If you must put a rear–facing child restraint system on the right front seat, make sure the passenger airbag manual on–off switch is in the “OFF” position and that the indicator light is on.



CAUTION

- **Do not put a rear–facing child restraint system on the rear seat if the child restraint system interferes with the front seat lock mechanism or with your proper driving position. This can cause severe injury to the child and front passenger in case of sudden braking or a collision.**
- **If your driving position is not satisfactory, install the child restraint system at another position.**

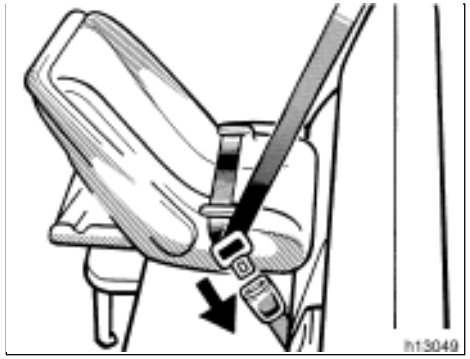

1. Run the lap and shoulder belt through or around the infant seat following the instructions provided by its manufacturer and insert the tab into the buckle taking care not to twist the belt. Keep the lap portion of the belt tight.

CAUTION

- **After inserting the tab, make sure the tab and buckle are locked and that the lap and shoulder portions of the belt are not twisted.**
- **Do not insert coins, clips, etc. in the buckle as this may prevent you from properly latching the tab and buckle.**
- **If the seat belt does not function normally, it cannot protect your child from injury. Contact your Toyota dealer immediately. Do not use the seat until the seat belt is fixed.**



2. Fully extend the shoulder belt to put it in the lock mode. When the belt is then retracted even slightly, it cannot be extended.

To hold the infant seat securely, make sure the belt is in the lock mode before letting the belt retract.



3. While pressing the infant seat firmly against the seat cushion and seatback, let the shoulder belt retract as far as it will go to hold the infant seat securely.



CAUTION

Push and pull the child restraint system in different directions to be sure it is secure. Follow all the installation instructions provided by its manufacturer.

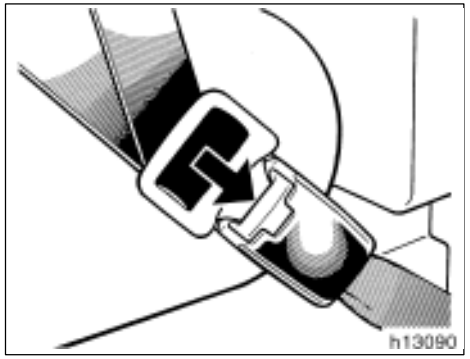

4. To remove the infant seat, press the buckle–release button and allow the belt to retract completely. The belt will move freely again and be ready to work for an adult or older child passenger.

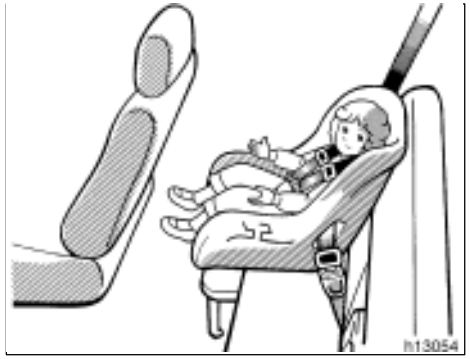

(B) CONVERTIBLE SEAT INSTALLATION

A convertible seat is used in forward–facing and rear–facing position depending on the child’s age and size. When installing, follow the manufacturer’s instruction about the applicable child’s age and size as well as directions for installing a child restraint system.



CAUTION

Rear–facing child restraint system: Never put a rear–facing child restraint system on the right front seat with the passenger airbag manual on–off switch in the “ON” position. In the event of an accident, the force of the rapid inflation of the passenger airbag can cause death or serious injury to the child.

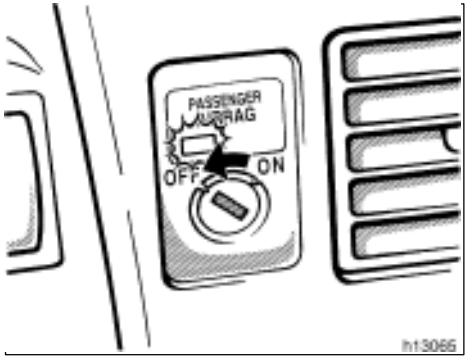

When you put a rear–facing child restraint system which belongs to a passenger risk group on the right front seat, turn the passenger airbag manual on–off switch counterclockwise to the “OFF” position. (For details, see “SRS driver and front passenger airbags” in this section.)

The indicator comes on when the system is off.

CAUTION

If you must put a rear–facing child restraint system on the right front seat, make sure the passenger airbag manual on–off switch is in the “OFF” position and that the indicator light is on.

CAUTION

Forward–facing child restraint system: A forward–facing child restraint system which belongs to a passenger risk group should never be put on the right front seat with the passenger airbag manual on–off switch in the “ON” position, because the force of a deploying airbag could cause death or serious injury to the child in forward seating position. (For details, see “SRS driver and front passenger airbags” in this section.)



CAUTION

- Do not put a rear–facing child restraint system on the rear seat if the child restraint system interferes with the front seat lock mechanism or with your proper driving position. This can cause severe injury to the child and front passenger in case of sudden braking or a collision.
- If your driving position is not satisfactory, install the child restraint system at another position.



1. Run the lap and shoulder belt through or around the convertible seat following the instructions provided by its manufacturer and insert the tab into the buckle taking care not to twist the belt. Keep the lap portion of the belt tight.

CAUTION

- **After inserting the tab, make sure the tab and buckle are locked and that the lap and shoulder portions of the belt are not twisted.**
- **Do not insert coins, clips, etc. in the buckle as this may prevent you from properly latching the tab and buckle.**
- **If the seat belt does not function normally, it cannot protect your child from injury. Contact your Toyota dealer immediately. Do not use the seat until the seat belt is fixed.**

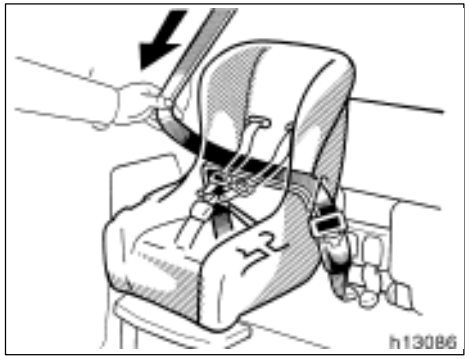

2. Fully extend the shoulder belt to put it in the lock mode. When the belt is then retracted slightly, it cannot be extended.

To hold the convertible seat securely, make sure the belt is in the lock mode before letting the belt retract.

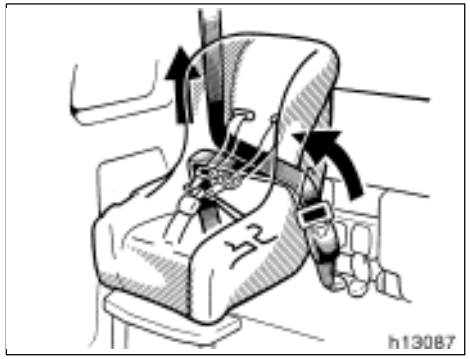

3. While pressing the convertible seat firmly against the seat cushion and seatback, let the shoulder belt retract as far as it will go to hold the convertible seat securely.



CAUTION

Push and pull the child restraint system in different directions to be sure it is secure. Follow all the installation instructions provided by its manufacturer.

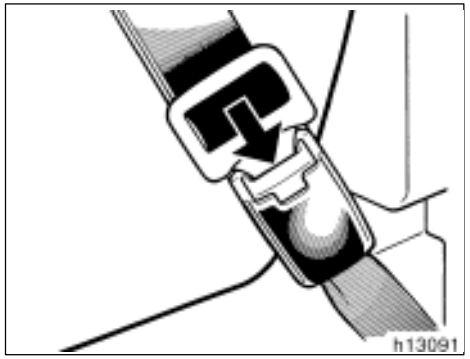

4. To remove the convertible seat, press the buckle–release button and allow the belt to retract completely. The belt will move freely again and be ready to work for an adult or older child passenger.

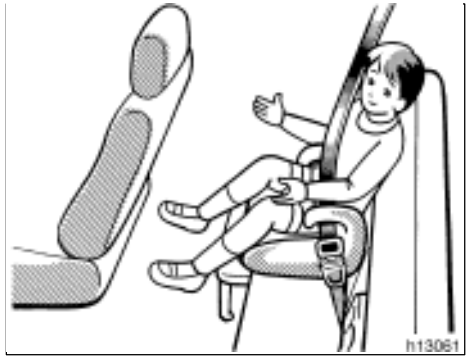

(C) BOOSTER SEAT INSTALLATION

A booster seat is used in forward–facing position only.

CAUTION

A forward–facing child restraint system which belongs to a passenger risk group should never be put on the right front seat with the passenger airbag manual on–off switch in the “ON” position, because the force of a deploying airbag could cause death or serious injury to the child in forward seating position. (For details, see “SRS driver and front passenger airbags” in this section.)



1. Sit the child on a booster seat. Run the lap and shoulder belt through or around the booster seat and child following the instructions provided by its manufacturer and insert the tab into the buckle taking care not to twist the belt.

Make sure the shoulder belt is correctly across the child’s shoulder and that the lap belt is positioned as low as possible on child’s hips. See “Seat belts” for details.

CAUTION

- **Always make sure the shoulder belt is positioned across the center of child’s shoulder. The belt should be kept away from child’s neck, but not falling off child’s shoulder. Failure to do so could reduce the amount of protection in an accident and cause serious injuries in a collision.**
- **Both high–positioned lap belts and loose–fitting belts could cause serious injuries due to sliding under the lap belt during a collision or other unintended result. Keep the lap belt positioned as low on hips as possible.**
- **For child’s safety, do not place the shoulder belt under child’s arm.**
- **After inserting the tab, make sure the tab and buckle are locked and that the lap and shoulder portions of the belt are not twisted.**
- **Do not insert coins, clips, etc. in the buckle as this may prevent you from properly latching the tab and buckle.**

- **If the seat belt does not function normally, it cannot protect your child from injury. Contact your Toyota dealer immediately. Do not use the seat until the seat belt is fixed.**

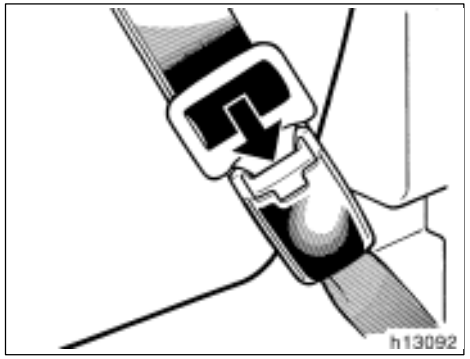

2. To remove the child restraint system, press the buckle–release button and allow the belt to retract.

Tilt steering wheel

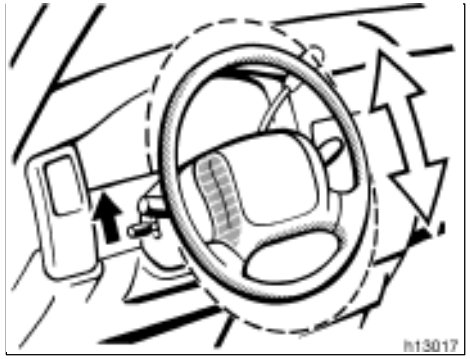

Type A

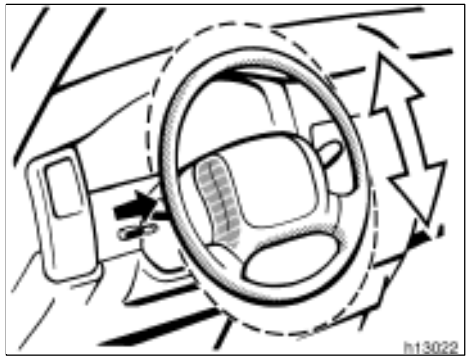

Type B

To change the steering wheel angle:

Type A—Hold the steering wheel, pull up the lock release lever, tilt the steering wheel to the desired angle and release the lever.

Type B—Hold the steering wheel, pull the lock release lever toward you, tilt the steering wheel to the desired angle and release the lever.

When the steering wheel is in a low position, it will spring up as you release the lock release lever.

CAUTION

- **Do not adjust the steering wheel while the vehicle is moving.**
- **After adjusting the steering wheel, try moving it up and down to make sure it is locked in position.**

Outside rear view mirrors—

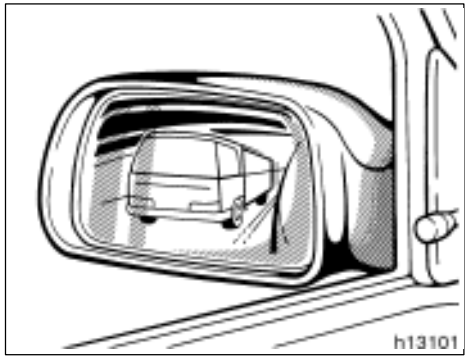

Adjust the mirror so that you can just see the side of your vehicle in the mirror.

Be careful when judging the size or distance of any object seen in the outside rear view mirror on the passenger's side. It is a convex mirror with a curved surface. Any object seen in a convex mirror will look smaller and farther away than when seen in a flat mirror.

CAUTION

Do not adjust the mirror while the vehicle is moving. It may cause the driver to mishandle the vehicle and an accident may occur resulting in personal injuries.

—Rear view mirror control (lever type)

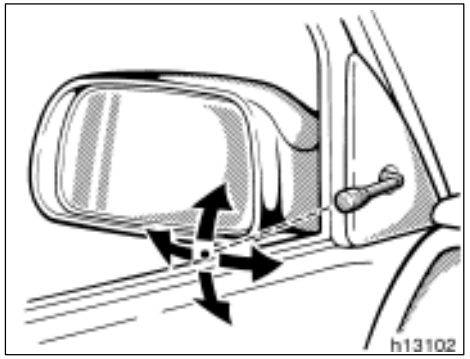

To adjust the rear view mirror, simply operate the control lever.

NOTICE

If ice should jam the mirror, do not operate the control or scrape the mirror face. Use a spray de–icer to free the mirror.

—Rear view mirror control (power type)

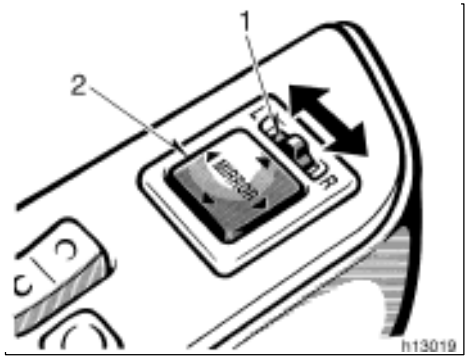

To adjust a mirror, use the switches.

1. Master switch—To select the mirror to be adjusted
   Place the switch at “L” (left) or “R” (right).
2. Control switch—To move the mirror
   Push the switch in the desired direction.

Mirror can be adjusted when key is in the “ACC” or “ON” position.

NOTICE

If ice should jam the mirror, do not operate the control or scrape the mirror face. Use a spray de–icer to free the mirror.

—Folding rear view mirrors (except lever type)

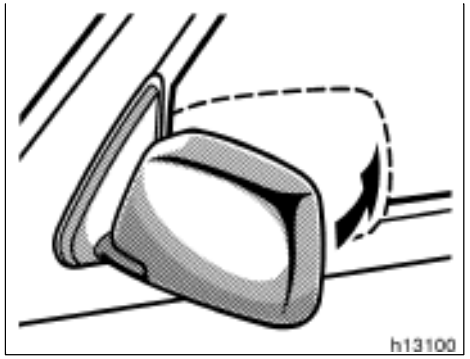

The rear view mirrors can be folded backward for parking in restricted areas.

To fold the rear view mirror, push backward.

CAUTION

Do not drive with the mirrors folded backward. Both the driver and passenger side rear view mirrors must be extended and properly adjusted before driving.

Anti–glare inside rear view mirror

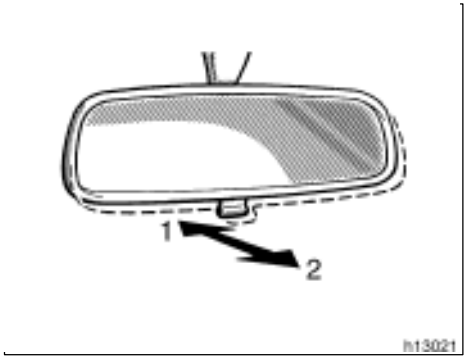

Adjust the mirror so that you can just see the rear of your vehicle in the mirror.

To reduce glare from the headlights of the vehicle behind you during night driving, operate the lever on the lower edge of the mirror.

Daylight driving—Lever at position 1

The reflection in the mirror has greater clarity at this position.

Night driving—Lever at position 2

Remember that by reducing glare you also lose some rear view clarity.

CAUTION

Do not adjust the mirror while the vehicle is moving. It may cause the driver to mishandle the vehicle and an accident may occur resulting in personal injuries.

SECTION 1–4

OPERATION OF INSTRUMENTS AND CONTROLS

Lights and Wipers

Headlights and turn signals 70
Emergency flashers 71
Instrument panel light control 72
Interior lights 72
Personal lights 73
Ignition switch light 73
Windshield wipers and washer 73

Headlights and turn signals

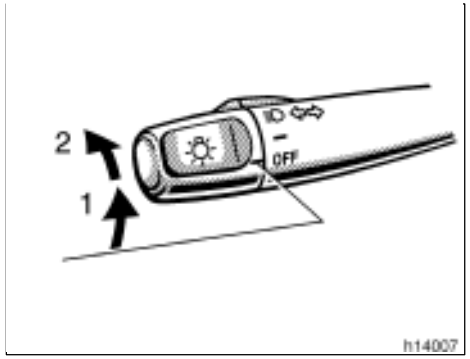

HEADLIGHTS

To turn on the following lights: Twist the headlight/turn signal lever knob.

Position 1—Parking, tail, license plate and instrument panel lights

Position 2—Headlights and all of the above

Light reminder buzzer

A buzzer will remind you to turn the lights off when the driver's door is opened if you remove the key with the headlights left on.

NOTICE

To prevent the battery from being discharged, do not leave the lights on for a long period when the engine is not running.

Daytime running light system (all models in Canada and some models in the U.S.A.)

The headlights turn on at reduced intensity when the parking brake is released with the engine started, even with the light switch in the "OFF" position. They will not go off until the ignition switch is turned off.

To turn on the other exterior lights and instrument panel lights, twist the knob to the position 1.

Twist the knob to the position 2 to turn to full intensity for driving at night.

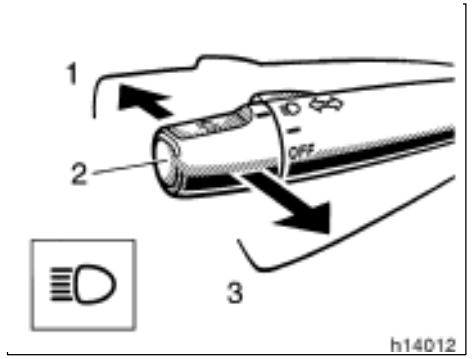

High–Low beams—For high beams, turn the headlights on and push the lever away from you (position 1). Pull the lever toward you (position 2) for low beams.

The headlight high beam indicator light (blue light) on the instrument panel will tell you that the high beams are on.

Flashing the high beam headlights (position 3)—Pull the lever all the way back. The high beam headlights turn off when you release the lever.

You can flash the high beam headlights with the knob turned to "OFF".

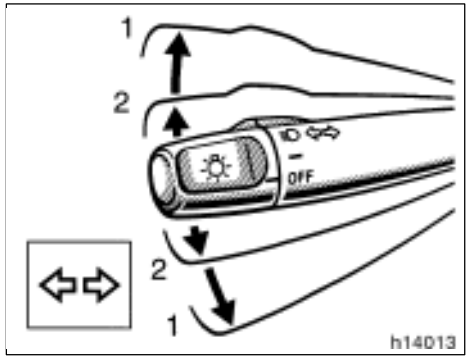

TURN SIGNALS

To signal a turn, push the headlight/ turn signal lever up or down to position 1.

The key must be in the "ON" position.

The lever automatically returns after you make a turn, but you may have to return it by hand after you change lanes.

To signal a lane change, move the lever up or down to the pressure point (position 2) and hold it.

If the turn signal indicator lights (green lights) on the instrument panel flash faster than normal, a front or rear turn signal bulb is burned out.

Emergency flashers

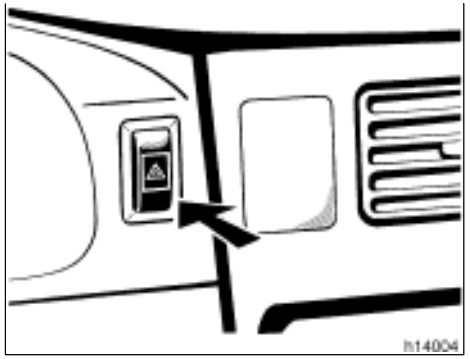

To turn on the emergency flashers, push the switch.

All the turn signal lights will flash. To turn them off, push the switch once again.

Turn on the emergency flashers to warn other drivers if your vehicle must be stopped where it might be a traffic hazard.

Always pull as far off the road as possible.

The turn signal light switch will not work when the emergency flashers are operating.

NOTICE

To prevent the battery from being discharged, do not leave the switch on longer than necessary when the engine is not running.

Instrument panel light control

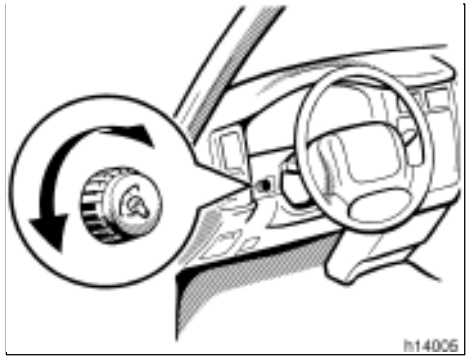

To adjust the brightness of the instrument panel lights, turn the knob.

Interior lights



Front light

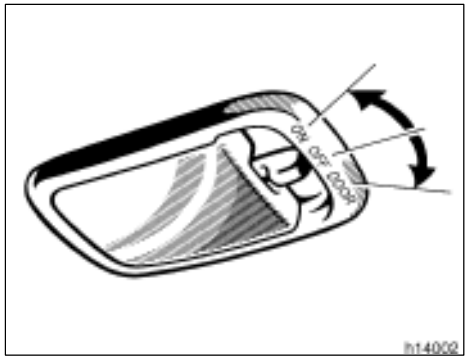

Rear light (Xtra–cab models)

To turn on the interior light, slide the switch.

The interior light switch has the following positions:

“ON”—Keeps the light on all the time.

“OFF”—Turns the light off.

“DOOR”—Turns the light on when either door is opened. The light goes off when both doors are closed.

Personal lights

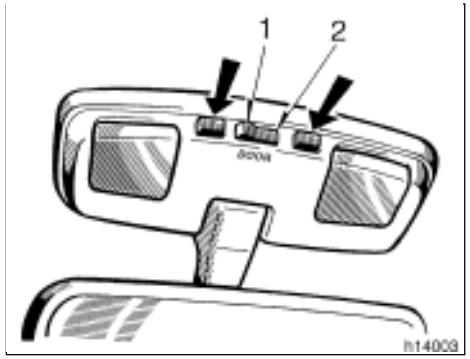

The personal lights operate separately with each outer switch.

To turn on the light, push the switch on your side. To turn the light off, push the switch once again.

The center switch has the following positions:

Position 1—Turns both lights on when either door is opened. The lights go off when both doors are closed.

Position 2—The lights are off unless you operate either outer switch.

Ignition switch light

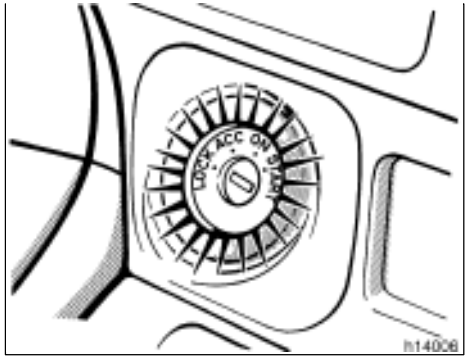

For easy access to the ignition switch, the ignition switch light comes on when either door is opened.

The light remains on for some time after both doors are closed.

Windshield wipers and washer (intermittent type)

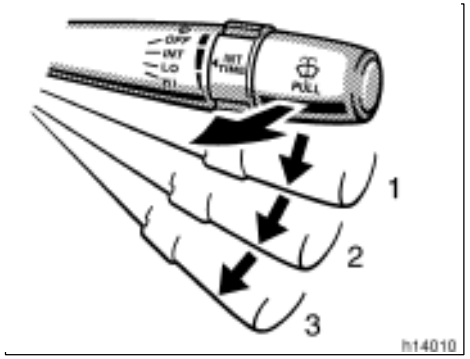

To turn on the windshield wipers, move the lever to the desired setting.

The key must be in the “ON” position.

Lever position	Speed setting
Position 1	Intermittent
Position 2	Slow
Position 3	Fast

The “INT TIME” band lets you adjust the wiping time interval when the wiper lever is in the intermittent position (position 1). Twist the band upward to increase the time between sweeps, and downward to decrease it.

To squirt washer fluid, pull the lever toward you and release it.

If the windshield wipers are off, they will operate a couple of times after the washer squirts.

For instructions on adding washer fluid, see “Adding washer fluid” in Section 7–3.

In freezing weather, warm the windshield with the defroster before using the washer. This will help prevent the washer fluid from freezing on your windshield, which can block your vision.

NOTICE

Do not operate the wipers if the windshield is dry. It may scratch the glass.

Windshield wipers and washer (mist type)

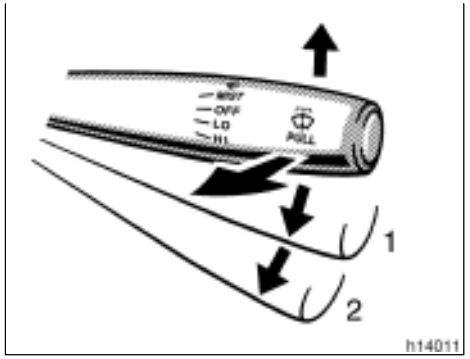

To turn on the windshield wipers, move the lever to the desired setting.

The key must be in the “ON” position.

Lever position	Speed setting
Position 1	Slow
Position 2	Fast

For a single sweep of the windshield, push the lever up and release it.

To squirt washer fluid, pull the lever toward you and release it.

For instructions on adding washer fluid, see “Adding washer fluid” in Section 7–3.

In freezing weather, warm the windshield with the defroster before using the washer. This will help prevent the washer fluid from freezing on your windshield, which can block your vision.

NOTICE

Do not operate the wipers if the windshield is dry. It may scratch the glass.

SECTION 1–5

OPERATION OF INSTRUMENTS AND CONTROLS

Gauges, Meters and Service reminder indicators

Fuel gauge 76
Engine coolant temperature gauge 76
Tachometer 77
Odometer and two trip meters 78
Service reminder indicators and warning buzzers 78

Fuel gauge

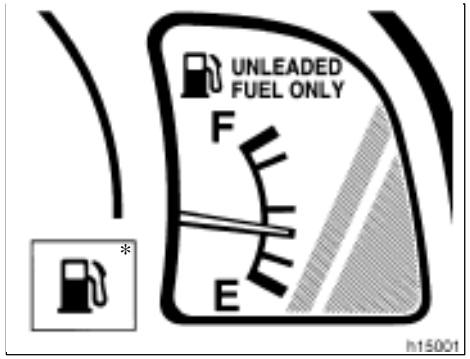

With tachometer
*: On some models

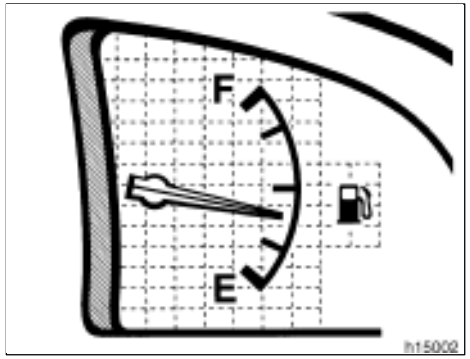

Without tachometer

The gauge works when the ignition switch is on and indicates the approximate quantity of fuel remaining in the tank.

Nearly full—Needle at “F”
Nearly empty—Needle at “E”

It is a good idea to keep the tank over 1/4 full.

This fuel gauge has a non–return type needle which remains at the last indicated position when the ignition switch is turned off.

If the fuel level approaches “E” or the low fuel level warning light comes on, fill the fuel tank as soon as possible.

On inclines or curves, due to the movement of fuel in the tank, the fuel gauge needle may fluctuate or the low fuel level warning light may come on earlier than usual.

If the fuel tank is completely empty, the malfunction indicator lamp comes on. Fill the fuel tank immediately.

The indicator lamp goes off after driving several times. If the indicator lamp does not go off, contact your Toyota dealer as soon as possible.

Engine coolant temperature gauge

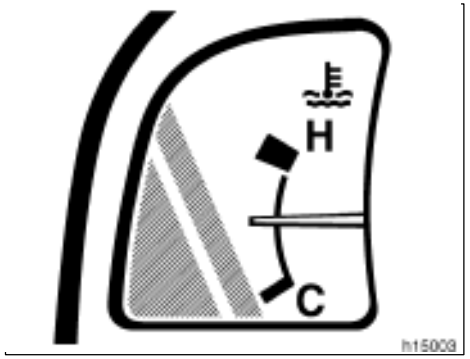

With tachometer

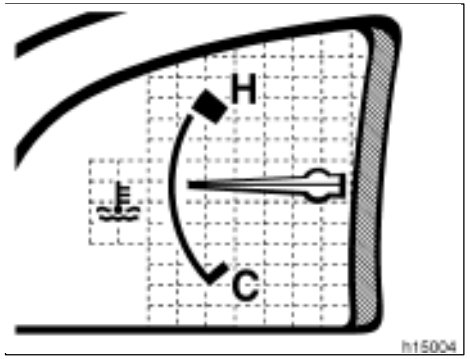

Without tachometer

The gauge indicates the engine coolant temperature when the ignition switch is on. The engine operating temperature will vary with changes in weather and engine load.

If the needle moves into the red zone, your engine is too hot. If your vehicle overheats, stop your vehicle and allow the engine to cool.

Your vehicle may overheat during severe operating conditions, such as:

- Driving up a long hill on a hot day.
- Reducing speed or stopping after high speed driving.
- Idling for a long period with the air conditioning on in stop–and–go traffic.
- Towing a trailer.

NOTICE

- ***Do not remove the thermostat in the engine cooling system as this may cause the engine to overheat. The thermostat is designed to control the flow of coolant to keep the temperature of the engine within the specified operating range.***
- ***Do not continue driving with an overheated engine. See "If your vehicle overheats" in Section 4.***

Tachometer

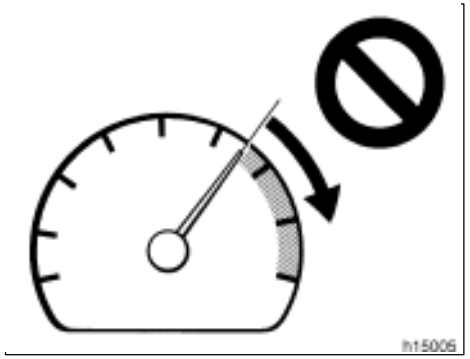

The tachometer indicates engine speed in thousands of rpm (revolutions per minute). Use it while driving to select correct shift points and to prevent engine lugging and overrevving.

Driving with the engine running too fast causes excessive engine wear and poor fuel economy. Remember, in most cases the slower the engine speed, the greater the fuel economy.

NOTICE

Do not let the indicator needle get into the red zone. This may cause severe engine damage.

Odometer and two trip meters

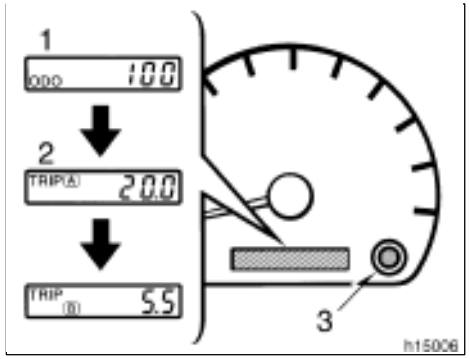

This meter displays the odometer and two trip meters.

1. Odometer—Shows the total distance the vehicle has been driven.
2. Two trip meters—Show two different distances independently driven since the last time each trip meter was set to zero.

   You can use one trip meter to calculate the fuel economy and the other to measure the distance on each trip. All trip meter data is cancelled if the electrical power source is disconnected.
3. Trip meter reset knob—Resets the two trip meters to zero, and also change the meter display.

   To change the meter display, quickly push and release the knob. The meter display changes in the order from the odometer to trip meter A to trip meter B, then back to the odometer each time you push.

   To reset the trip meter A to zero, display the meter A reading, then push and hold the knob until the meter is set to zero. The same process can be applied for resetting the trip meter B.

Service reminder indicators and warning buzzers

If the indicator or buzzer comes on...	Do this.
(a) 	If parking brake is off, stop and check.
(b)  (Indicator and buzzer)	Fasten seat belt.
(c) 	Stop and check.
(d) 	Stop and check.
(e) 	Take vehicle to Toyota dealer.

If the indicator or buzzer comes on...		Do this.
(f)		Fill up tank.
(g)	ABS (type A)	Take vehicle to Toyota dealer.
	 (type B)	
(h)		Take vehicle to Toyota dealer immediately.
(i)	A/T P	Shift front drive control lever out of “N”.

If the indicator or buzzer comes on...		
(l)		Turn off lights.
(m)	Key reminder buzzer	Remove key.

CAUTION

It is dangerous to continue driving normally when the brake fluid level is low.

If the brake fluid level is correct...

Have the warning system checked by your Toyota dealer.

(b) Seat Belt Reminder Light and Buzzer

This light and buzzer remind you to buckle up the driver's seat belt.

Once the ignition key is turned to "ON" or "START", the reminder light flashes and buzzer comes on if the driver's seat belt is not fastened. Unless the driver fastens the belt, the light stays on and the buzzer sounds for about 4 to 8 seconds.

(c) Discharge Warning Light

This light warns that the battery is being discharged.

If it comes on while you are driving, there is a problem somewhere in the charging system.

The engine ignition will continue to operate, however, until the battery is discharged. Turn off the air conditioning, blower, radio, etc., and drive directly to the nearest Toyota dealer or repair shop.

NOTICE

Do not continue driving if the engine drive belt is broken or loose.

(d) Low Oil Pressure Warning Light

This light warns that the engine oil pressure is too low.

If it flickers or stays on while you are driving, pull off the road to a safe place and stop the engine immediately. Call a Toyota dealer or qualified repair shop for assistance.

The light may occasionally flicker when the engine is idling or it may come on briefly after a hard stop. There is no cause for concern if it then goes out when the engine is accelerated slightly.

The light may come on when the oil level is extremely low. It is not designed to indicate low oil level, and the oil level must be checked using the level dipstick.

NOTICE

Do not drive the vehicle with the warning light on—even for one block. It may ruin the engine.

(e) Malfunction indicator lamp

This lamp comes on in the following cases.

a. The fuel tank is completely empty. (See "Fuel gauge" in Section 1–5 for instructions.)

b. The fuel tank cap is not tightened securely. (See "Fuel tank cap" in Section 1–2 for instructions.)

c. There is a problem somewhere in your engine or automatic transmission electrical system.

If it comes on while you are driving in case c, have your vehicle checked/repaired by your Toyota dealer as soon as possible.

(f) Low Fuel Level Warning Light (on some models with tachometer)

This light comes on when the fuel level in the tank becomes nearly empty. Fill up the tank as soon as possible.

On inclines or curves, due to the movement of fuel in the tank, the low fuel level warning light may come on earlier than usual.

(g) “ABS” Warning Light

This light warns that there is a problem somewhere in your anti–lock brake system.

If the light comes on while you are driving, have your vehicle checked by your Toyota dealer as soon as possible.

The light will come on when the ignition key is turned to the “ON” position. After a few seconds, the light will go off.

When the “ABS” warning light is on (and the brake system warning light is off), the brake system operates conventionally but anti–lock brake system is not assisting brake performance so that the wheels can lock–up during sudden braking or braking on slippery road surfaces.

Vehicles with rear differential lock system—
The anti–lock brake system does not operate when the rear differential is locked. It is normal operation for the “ABS” warning light to be on at this time.

(h) SRS Warning Light

This light will come on when the ignition key is turned to the “ACC” or “ON” position. After about 6 seconds, the light will go off. This means the system of the airbag and front seat belt pretensioners are operating properly.

The warning light system monitors the airbag sensor assembly, front airbag sensors seat belt pretensioner assemblies, inflators, warning light, interconnecting wiring and power sources.

If either of the following conditions occurs, this indicates a malfunction somewhere in the parts monitored by the warning light system. Contact your Toyota dealer as soon as possible to service the vehicle.

- The light does not come on when the ignition key is turned to the “ACC” or “ON” position or remains on.
- The light comes on or flashes while driving.

(i) Unengaged “Park” Warning Light (vehicles with automatic transmission)

This light warns that the transmission “Park” mechanism is not engaged. If the front drive control lever is in the “N” position while the selector lever is in the “P” position, the transmission will disengage and the wheels will not lock.



CAUTION

To restore the park function, shift the front drive control lever out of “N”, or the vehicle can move.

(j) Automatic Transmission Fluid Temperature Warning Light

This light warns that the automatic transmission fluid temperature is too high.

If this light comes on while you are driving, slow down and pull off the road. Stop the vehicle at a safe place and put the selector lever in “P”. With the engine idling, wait until the light goes off. If the light goes off, you may start the vehicle again. If the light does not go off, call a Toyota dealer or qualified repair shop for assistance.

(k) Low Windshield Washer Fluid Level Warning Light (on some models)

The light warns that the windshield washer fluid level is too low. Add washer fluid at your earliest opportunity. (For instructions, see “Adding washer fluid” in Section 7–3.)

(l) Light Reminder Buzzer

This buzzer will sound if the headlight switch is left on and the driver’s door is opened with the key removed from the ignition switch.

(m) Key Reminder Buzzer

This buzzer reminds you to remove the key when you open the driver’s door with the ignition key in the “ACC” or “LOCK” position.

CHECKING SERVICE REMINDER INDICATORS (except the low fuel level warning light and low windshield washer fluid level warning light)

1. Apply the parking brake.
2. Turn the ignition key to “ACC”.
   The SRS warning light should come on. It goes off after about 6 seconds.
3. Turn the ignition key to “ON”, but do not start the engine.
   All the service reminder indicators except the SRS warning light should come on. The “ABS” warning light goes off after a few seconds.

If any service reminder indicator or warning buzzer does not function as described above, either the bulb is burned out or the circuit is in need of repair. Have it checked by your Toyota dealer as soon as possible.

SECTION 1– 6

OPERATION OF INSTRUMENTS AND CONTROLS

Ignition switch, Transmission and Parking brake

Ignition switch with steering lock 84
Automatic transmission 85
Manual transmission 99
Four–wheel drive system 101
Rear differential lock system 106
Parking brake 108
Cruise control 109
Clutch start cancel switch 111

Ignition switch with steering lock

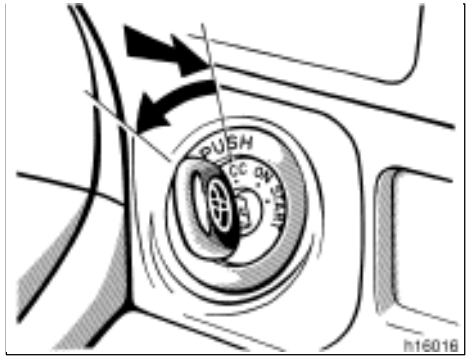

“START”—Starter motor on. The key will return to the “ON” position when released.

For starting tips, see Section 3.

“ON”—Engine on and all accessories on.

This is the normal driving position.

“ACC”—Accessories such as the radio operate, but the engine is off.

If you leave the key in the “ACC” or “LOCK” position and open the driver’s door, a buzzer will remind you to remove the key.

“LOCK”—Engine is off and the steering wheel is locked. The key can be removed only at this position.

You must push in the key to turn the key from “ACC” to the “LOCK” position. On vehicles with an automatic transmission, the selector lever must be in the “P” position before pushing the key.

When starting the engine, the key may seem stuck at the “LOCK” position. To free it, first be sure the key is pushed all the way in, and then rock the steering wheel slightly while turning the key gently.

CAUTION

For manual transmission:

Never remove the key when the vehicle is moving, as this will lock the steering wheel and result in loss of steering control.

NOTICE

Do not leave the key in the “ON” position if the engine is not running. The battery will discharge and the ignition could be damaged.

Automatic transmission (conventional type)

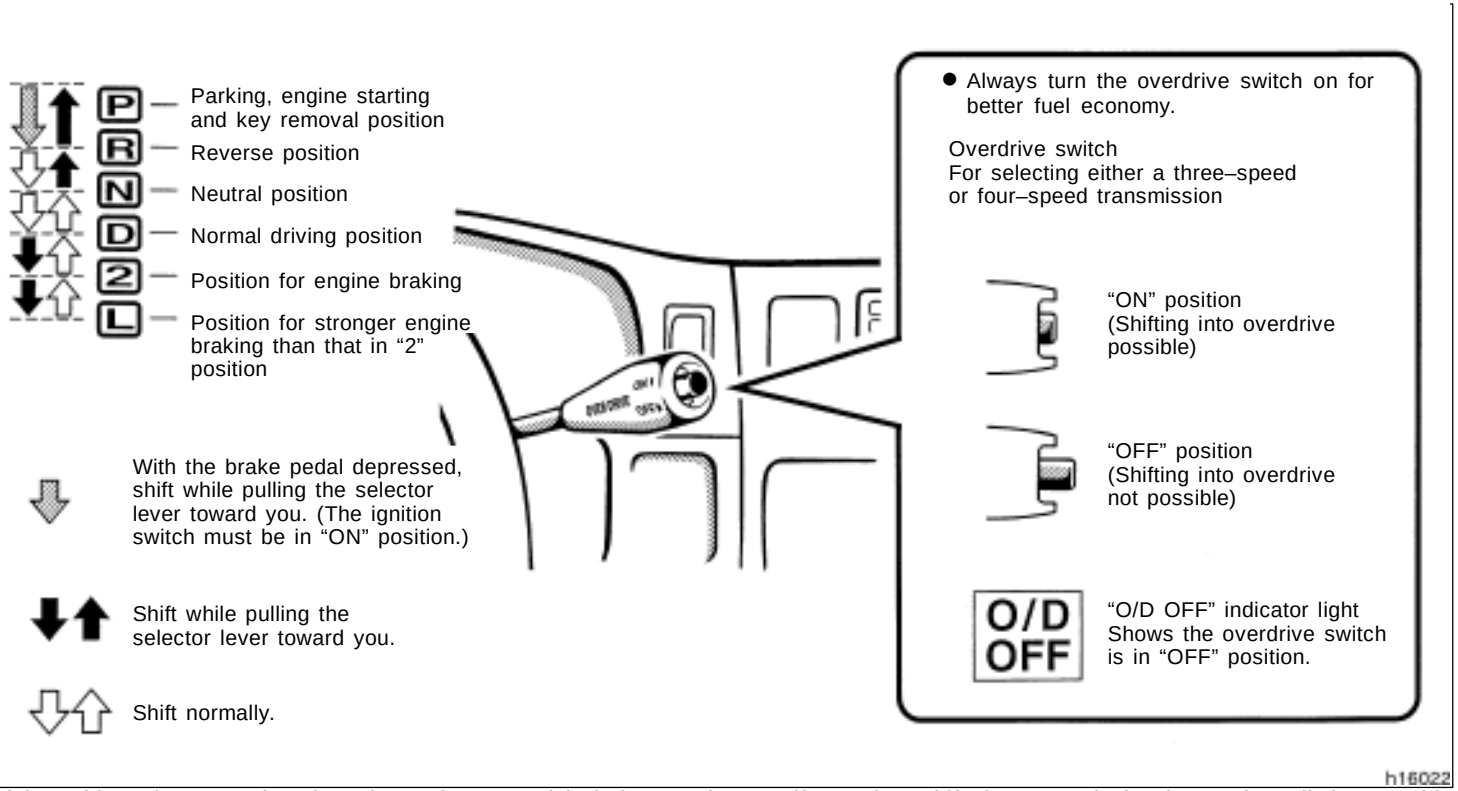

Vehicles with cruise control—When the cruise control is being used, even if you downshift the transmission by turning off the overdrive switch, engine braking will not be applied because the cruise control is not cancelled. For ways to decrease the vehicle speed, see “Cruise control” in this section.

Your automatic transmission has a shift lock system to minimize the possibility of incorrect operation. This means you can only shift out of “P” position when the brake pedal is depressed (with the ignition switch in “ON” position and the selector lever pulled toward you).

(a) Normal driving

1. Start the engine as instructed in “How to start the engine” in Section 3. The transmission must be in “P” or “N”.
2. After starting the engine, always push in the overdrive switch.
3. With your foot holding down the brake pedal, shift the selector lever to “D”.

With the selector lever in the “D” position and the overdrive switch in the “ON” position, the automatic transmission will shift automatically from the first gear through the fourth gear and select the most suitable gear meeting the driving condition.

Even during ordinary driving, keep the overdrive switch turned on. (At this time, the “O/D OFF” indicator light on the instrument cluster will be off.)

Always keep the overdrive switch turned on for better fuel economy and quieter driving. If you have turned off the overdrive switch, be sure to turn the overdrive switch on again. If the engine coolant temperature is low, the transmission will not shift into the overdrive gear even with the overdrive switch on.

CAUTION

Never put your foot on the accelerator pedal while shifting.

4. Release the parking brake and brake pedal. Depress the accelerator pedal slowly for smooth starting.

(b) Using engine braking

To use engine braking, you can downshift the transmission as follows:

- Turn off the overdrive switch. The “O/D OFF” indicator light will come on and the transmission will downshift to the third gear.
- Shift into the “2” position when the vehicle speed drops down to or lower than 106 km/h (66 mph). The transmission will downshift to the second gear and more powerful engine braking will be enabled.
- Shift into the “L” position when the vehicle speed drops down to or lower than 61 km/h (38 mph). The transmission will downshift to the first gear and maximum engine braking will be enabled.

Vehicles with cruise control—When the cruise control is being used, even if you downshift the transmission by turning off the overdrive switch, engine braking will not be applied because the cruise control is not cancelled. For ways to decrease the vehicle speed, see “Cruise control” in this section.

CAUTION

Be careful when downshifting on a slippery surface. Abrupt shifting could cause the vehicle to spin or skid.

NOTICE

To prevent engine overrevving, do not downshift if you are going faster than the above speed in each position.

(c) Using "2" and "L" positions

The "2" and "L" positions are used for strong engine braking as described previously.

With the selector lever in "2" or "L", you can start the vehicle in motion as with the lever in "D".

With the selector lever in "2", the vehicle will start in the first gear and automatically shift to second gear.

With the selector lever in "L", the transmission is engaged in first gear.

NOTICE

- ***Be careful not to overrev the engine. Watch the tachometer to keep engine rpm from going into the red zone. The approximate maximum allowable speed for each position is given below for your reference:***

  "2" . . . . . 124 km/h (77 mph)
  "L" . . . . . 72 km/h (45 mph)

- ***Do not continue hill climbing for a long time in the "2" or "L" position. This may cause severe automatic transmission damage from overheating. To prevent such damage, use "D" position for hill climbing or hard towing.***

(d) Backing up

1. Bring the vehicle to a complete stop.
2. With the brake pedal held down with your foot, shift the selector lever to the "R" position.

NOTICE

Never shift into reverse while the vehicle is moving.

(e) Parking

1. Bring the vehicle to a complete stop.
2. Pull the parking brake lever fully to securely apply the parking brake.
3. With the brake pedal pressed down, shift the selector lever to the "P" position.

CAUTION

While the vehicle is moving, never attempt to move the selector lever into "P" position under any circumstances. Serious mechanical damage and loss of vehicle control may result.

(f) Good driving practice

- If the transmission is repeatedly upshifted and downshifted between third gear and overdrive when climbing a gentle slope, the overdrive switch should be turned off. Be sure to turn the switch on immediately afterward.
- When towing a trailer, in order to maintain engine braking efficiency, do not use overdrive.

CAUTION

Always keep your foot on the brake pedal while stopped with the engine running. This prevents the vehicle from creeping.

NOTICE

Do not hold the vehicle on an upgrade with the accelerator pedal. It can cause the transmission to overheat. Always use the brake pedal or parking brake.

(g) Rocking your vehicle if stuck

CAUTION

If your vehicle becomes stuck in snow, mud, sand, etc., then you may attempt to rock the vehicle free by moving it forward and backward. Do not attempt this procedure if people or objects are anywhere near the vehicle. During the rocking operation the vehicle may suddenly move forward or backward as it becomes unstuck, causing injury or damage to nearby people or objects.

NOTICE

If you rock your vehicle, observe the following precautions to prevent damage to the transmission and other parts.

- ***Do not depress the accelerator pedal while shifting the selector lever or before the transmission is completely shifted to forward or reverse gear.***
- ***Do not race the engine and avoid spinning the wheels.***
- ***If your vehicle remains stuck after rocking the vehicle several times, consider other ways such as towing.***

(h) If you cannot shift the selector lever out of "P" position

If you cannot shift the selector lever from the "P" position even though the brake pedal is depressed, use the shift lock override button. For instructions, see "If you cannot shift automatic transmission selector lever" in Section 4.

Automatic transmission (electronically controlled type—two–wheel drive models except Pre Runner)

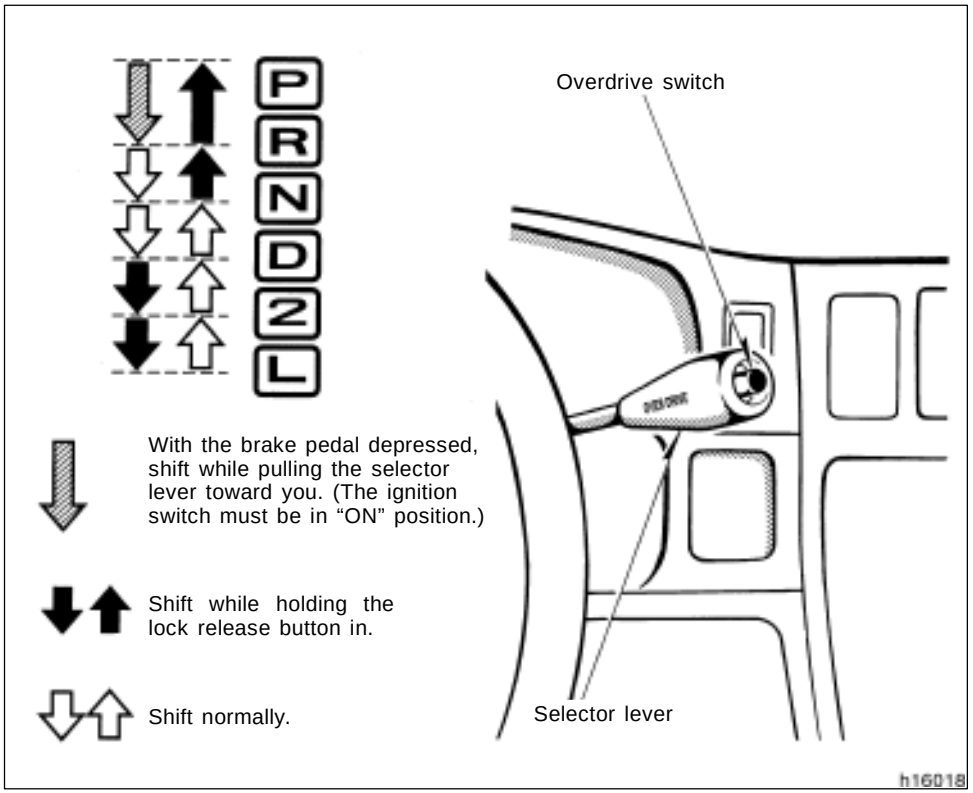

Your automatic transmission has a shift lock system to minimize the possibility of incorrect operation. This means you can only shift out of “P” position when the brake pedal is depressed (with the ignition switch in “ON” position and the selector lever pulled toward you).

(a) Selector lever

The shift position is displayed on the instrument cluster.

P: Parking, engine starting and key removal

R: Reverse

N: Neutral

D: Normal driving (with overdrive on)

2: Stronger engine braking

L: Maximum engine braking

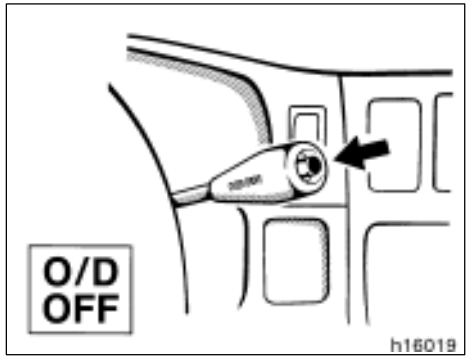

(b) Overdrive switch

You can select either a third gear (with overdrive off) or fourth gear (with overdrive on) by pushing this switch.

To turn the overdrive off, push the switch. The “O/D OFF” indicator light should come on. To turn the overdrive on again, push the switch again. The “O/D OFF” indicator light should go off.

Always drive your vehicle with the overdrive on for better fuel economy and quieter driving.

If the engine is turned off when the overdrive is off and restarted, the overdrive will automatically be on.

Vehicles with cruise control—When the cruise control is being used, even if you downshift the transmission by pushing and releasing the overdrive switch, engine braking will not be applied because the cruise control is not cancelled.

For ways to decrease the vehicle speed, see “Cruise control” in this section.

(c) Normal driving

1. Start the engine as instructed in “How to start the engine” in Section 3. The transmission must be in “P” or “N”.
2. With your foot holding down the brake pedal, shift the selector lever to “D”.

When the lever is in the “D” position, the automatic transmission system will select the most suitable gear for running conditions such as normal cruising, hill climbing, hard towing, etc.

Always turn the overdrive switch on for better fuel economy and quieter driving. If the engine coolant temperature is low, the transmission will not shift into the overdrive gear even with the overdrive on.

CAUTION

Never put your foot on the accelerator pedal while shifting.

3. Release the parking brake and brake pedal. Depress the accelerator pedal slowly for smooth starting.

(d) Using engine braking

To use engine braking, you can downshift the transmission as follows:

- Push the overdrive switch. The “O/D OFF” indicator light will come on and the transmission will downshift to the third gear.
- Shift into the “2” position. The transmission will downshift to the second gear when the vehicle speed drops down to or lower than 131 km/h (81 mph), and stronger engine braking will be enabled.
- Shift into the “L” position. The transmission will downshift to the first gear when the vehicle speed drops down to or lower than 63 km/h (39 mph), and maximum engine braking will be applied.

Vehicles with cruise control—When the cruise control is being used, even if you downshift the transmission by pushing and releasing the overdrive switch, engine braking is not applied because the cruise control is not cancelled.

For ways to decrease the vehicle speed, see “Cruise control” in this section.

CAUTION

Be careful when downshifting on a slippery surface. Abrupt shifting could cause the vehicle to spin or skid.

(e) Using “2” and “L” positions

The “2” and “L” positions are used for strong engine braking as described previously.

With the selector lever in “2” or “L”, you can start the vehicle in motion as with the lever in “D”.

With the selector lever in “2”, the vehicle will start in the first gear and automatically shift to the second gear.

With the selector lever in “L”, the transmission is engaged in first gear.

NOTICE

- ***Be careful not to overrev the engine. Watch the tachometer to keep engine rpm from going into the red zone. The approximate maximum allowable speed for each position is given below for your reference:***

  “2” . . . . . 136 km/h (85 mph)
  “L” . . . . . 74 km/h (46 mph)

- ***Do not continue hill climbing for a long time in the “2” or “L” position. This may cause severe automatic transmission damage from overheating. To prevent such damage, use “D” position for hill climbing or hard towing.***

(f) Backing up

1. Bring the vehicle to a complete stop.
2. With the brake pedal held down with your foot, shift the selector lever to the “R” position.

NOTICE

Never shift into reverse while the vehicle is moving.

(g) Parking

1. Bring the vehicle to a complete stop.
2. Pull the parking brake lever fully to securely apply the parking brake.
3. With the brake pedal pressed down, shift the selector lever to the “P” position.

CAUTION

Never attempt to move the selector lever into “P” position under any circumstances while the vehicle is moving. Serious mechanical damage and loss of vehicle control may result.

(h) Good driving practice

- If the transmission is repeatedly shifts up and down between third gear and overdrive when climbing a gentle slope, the overdrive should be turned off. Be sure to turn the switch on immediately afterward.
- When towing a trailer, in order to maintain engine braking efficiency, do not use overdrive.

CAUTION

Always keep your foot on the brake pedal while stopped with the engine running. This prevents the vehicle from creeping.

NOTICE

Do not hold the vehicle on an upgrade with the accelerator pedal. It can cause the transmission to overheat. Always use the brake pedal or parking brake.

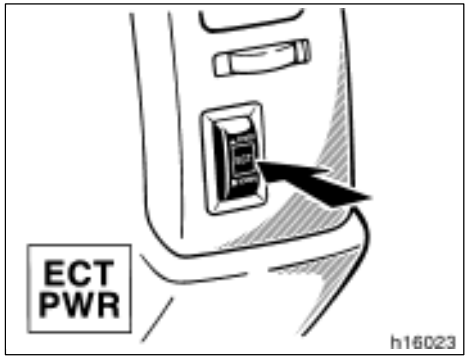

(i) Driving in “POWER” mode

In the “POWER” mode, the transmission is shifted up and down at a higher vehicle speed than in the “NORMAL” mode and a more powerful acceleration is achieved. To set the “POWER” mode, push in the driving pattern selector button. The POWER mode indicator light comes on.

For ordinary driving, Toyota recommends using the “NORMAL” mode to improve fuel economy.

(j) Rocking your vehicle if stuck

CAUTION

If your vehicle becomes stuck in snow, mud, sand, etc., then you may attempt to rock the vehicle free by moving it forward and backward. Do not attempt this procedure if people or objects are anywhere near the vehicle. During the rocking operation the vehicle may suddenly move forward or backward as it becomes unstuck, causing injury or damage to nearby people or objects.

NOTICE

If you rock your vehicle, observe the following precautions to prevent damage to the transmission and other parts.

- ***Do not depress the accelerator pedal while shifting the selector lever or before the transmission is completely shifted to forward or reverse gear.***

- ***Do not race the engine and avoid spinning the wheels.***
- ***If your vehicle remains stuck after rocking the vehicle several times, consider other ways such as towing.***

(k) If you cannot shift the selector lever out of “P” position

If you cannot shift the selector lever from the “P” position even though the brake pedal is depressed, use the shift lock override button. For instructions, see “If you cannot shift automatic transmission selector lever” in Section 4.

Automatic transmission (electronically controlled type—four–wheel drive models and Pre Runner)

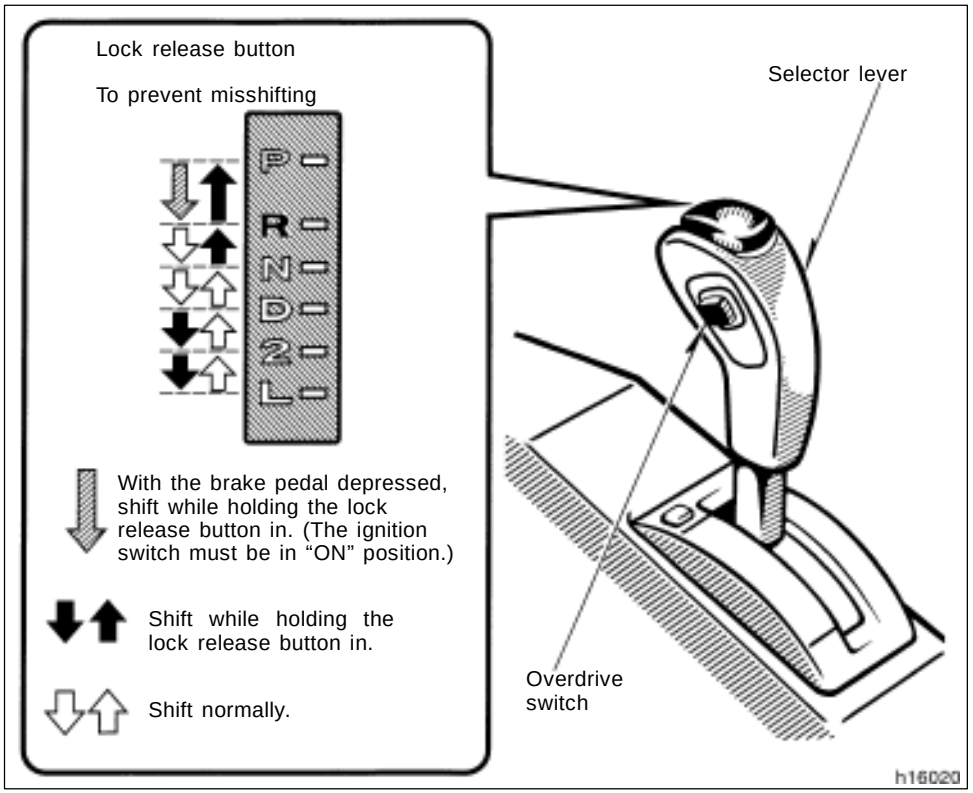

Your automatic transmission has a shift lock system to minimize the possibility of incorrect operation. This means you can only shift out of “P” position when the brake pedal is depressed (with the ignition switch in “ON” position and the lock release button depressed).

(a) Selector lever

The shift position is also displayed on the instrument cluster.

P: Parking, engine starting and key removal

R: Reverse

N: Neutral

D: Normal driving (with overdrive on)

2: Stronger engine braking

L: Maximum engine braking

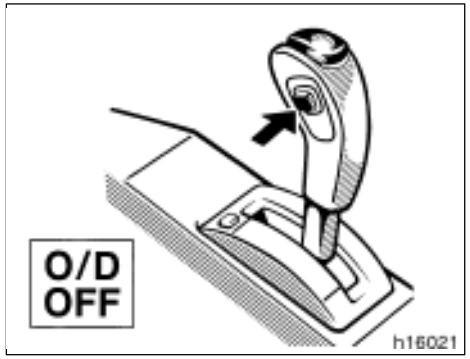

(b) Overdrive switch

You can select either a third gear (with overdrive off) or fourth gear (with overdrive on) by pushing this switch.

To turn the overdrive off, push the switch. The “O/D OFF” indicator light should come on. To turn the overdrive on again, push the switch again. The “O/D OFF” indicator light should go off.

Always drive your vehicle with the overdrive on for better fuel economy and quieter driving.

If the engine is turned off when the overdrive is off and restarted, the overdrive will be on automatically.

Vehicles with cruise control—When the cruise control is being used, even if you downshift the transmission by pushing and releasing the overdrive switch, engine braking will not be applied because the cruise control is not cancelled.

For ways to decrease the vehicle speed, see “Cruise control” in this section.

(c) Normal driving

1. Start the engine as instructed in “How to start the engine” in Section 3. The transmission must be in “P” or “N”.

When the front drive control lever is in “L4” (low–speed position, four–wheel drive), the driving pattern selector setting has no effect on gear shift timing. (See “Four–wheel drive system” in this section for information of the front drive control lever.)

2. With your foot holding down the brake pedal, shift the selector lever to “D”.

When the lever is in the “D” position, the automatic transmission system will select the most suitable gear for running conditions such as normal cruising, hill climbing, hard towing, etc.

Always turn the overdrive switch on for better fuel economy and quieter driving. If the engine coolant temperature is low or when the front drive control lever is in “L4” (low–speed position, four–wheel drive), the transmission will not shift into the overdrive gear even with the overdrive on. (See “Four–wheel drive system” in this section for information of the front drive control lever.)

CAUTION

Never put your foot on the accelerator pedal while shifting.

3. Release the parking brake and brake pedal. Depress the accelerator pedal slowly for smooth starting.

(d) Using engine braking

To use engine braking, you can downshift the transmission as follows:

- Push the overdrive switch. The “O/D OFF” indicator light will come on and the transmission will downshift to the third gear.

- Shift into the “2” position. The transmission will downshift to the second gear when the vehicle speed drops down to or lower than the following speed, and stronger engine braking will be enabled.

  Front drive control lever in “H2” and “H4”
  3RZ–FE engine
  . . . . . 106 km/h (66 mph)
  5VZ–FE engine
  . . . . . 114 km/h (71 mph)
  Front drive control lever in “L4”
  3RZ–FE engine
  . . . . . 36 km/h (22 mph)
  5VZ–FE engine
  . . . . . 38 km/h (24 mph)
- Shift into the “L” position. The transmission will downshift to the first gear when the vehicle speed drops down to or lower than the following speed, and maximum engine braking will be enabled.

  Front drive control lever in “H2” and “H4”
  3RZ–FE engine
  . . . . . 51 km/h (32 mph)
  5VZ–FE engine
  . . . . . 55 km/h (34 mph)
  Front drive control lever in “L4”
  3RZ–FE engine
  . . . . . 9 km/h (6 mph)
  5VZ–FE engine
  . . . . . 10 km/h (6 mph)

Vehicles with cruise control—When the cruise control is being used, even if you downshift the transmission by pushing and releasing the overdrive switch, engine braking is not applied because the cruise control is not cancelled.

For ways to decrease the vehicle speed, see “Cruise control” in this section.

CAUTION

Be careful when downshifting on a slippery surface. Abrupt shifting could cause the vehicle to spin or skid.

(e) Using “2” and “L” positions

The “2” and “L” positions are used for strong engine braking as described previously.

With the selector lever in “2” or “L”, you can start the vehicle in motion as with the lever in “D”.

With the selector lever in “2”, the vehicle will start in the first gear and automatically shift to the second gear.

With the selector lever in “L”, the transmission is engaged in first gear.

NOTICE

- ***Be careful not to overrev the engine. Watch the tachometer to keep engine rpm from going into the red zone. The approximate maximum allowable speed for each position is given below for your reference:***

  Four–wheel drive models
  Front drive control lever in “H2” or “H4”—
  3RZ–FE engine
  “2” . . . . . 109 km/h (68 mph)
  “L” . . . . . 60 km/h (37 mph)
  5VZ–FE engine
  “2” . . . . . 120 km/h (75 mph)
  “L” . . . . . 66 km/h (41 mph)

Front drive control lever in "L4"—

3RZ–FE engine

"2" . . . . . 43 km/h (27 mph)
"L" . . . . . 22 km/h (14 mph)

5VZ–FE engine

"2" . . . . . 46 km/h (29 mph)
"L" . . . . . 25 km/h (16 mph)

Pre Runner

3RZ–FE engine

"2" . . . . . 114 km/h (71 mph)
"L" . . . . . 63 km/h (39 mph)

5VZ–FE engine

"2" . . . . . 120 km/h (75 mph)
"L" . . . . . 66 km/h (41 mph)

◆ ***Do not continue hill climbing for a long time in the "2" or "L" position. This may cause severe automatic transmission damage from overheating. To prevent such damage, use "D" position for hill climbing or hard towing.***

(f) Backing up

1. Bring the vehicle to a complete stop.
2. With the brake pedal held down with your foot, shift the selector lever to the "R" position.

NOTICE

Never shift into reverse while the vehicle is moving.

(g) Parking

1. Bring the vehicle to a complete stop.
2. Pull the parking brake lever fully to securely apply the parking brake.
3. With the brake pedal pressed down, shift the selector lever to the "P" position.



CAUTION

Never attempt to move the selector lever into "P" position under any circumstances while the vehicle is moving. Serious mechanical damage and loss of vehicle control may result.

(h) Good driving practice

- If the transmission repeatedly shifts up and down between third gear and overdrive when climbing a gentle slope, the overdrive should be turned off. Be sure to turn the switch on immediately afterward.
- When towing a trailer, in order to maintain engine braking efficiency, do not use overdrive.



CAUTION

Always keep your foot on the brake pedal while stopped with the engine running. This prevents the vehicle from creeping.

NOTICE

Do not hold the vehicle on an upgrade with the accelerator pedal. It can cause the transmission to overheat. Always use the brake pedal or parking brake.

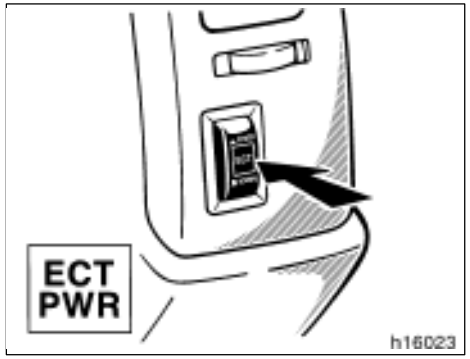

(i) Driving in "POWER" mode

In the "POWER" mode, the transmission is shifted up and down at a higher vehicle speed than in the "NORMAL" mode and a more powerful acceleration is achieved. To set the "POWER" mode, push in the driving pattern selector button. The POWER mode indicator light comes on.

For ordinary driving, Toyota recommends using the "NORMAL" mode to improve fuel economy.

(j) Rocking your vehicle if stuck

CAUTION

If your vehicle becomes stuck in snow, mud, sand, etc., then you may attempt to rock the vehicle free by moving it forward and backward. Do not attempt this procedure if people or objects are anywhere near the vehicle. During the rocking operation the vehicle may suddenly move forward or backward as it becomes unstuck, causing injury or damage to nearby people or objects.

NOTICE

If you rock your vehicle, observe the following precautions to prevent damage to the transmission and other parts.

- ***Do not depress the accelerator pedal while shifting the selector lever or before the transmission is completely shifted to forward or reverse gear.***
- ***Do not race the engine and avoid spinning the wheels.***
- ***If your vehicle remains stuck after rocking the vehicle several times, consider other ways such as towing.***

(k) If you cannot shift the selector lever out of "P" position

If you cannot shift the selector lever from the "P" position even though the brake pedal is depressed, use the shift lock override lever. For instructions, see "If you cannot shift automatic transmission selector lever" in Section 4.

Manual transmission

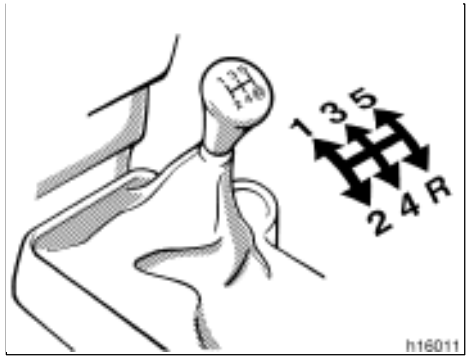

The shift pattern is as shown above.

Press the clutch pedal down fully while shifting, and then release it slowly. Do not rest your foot on the pedal while driving, because it will cause clutch trouble. And do not use the clutch to hold the vehicle when stopped on an uphill grade–use the parking brake.

Recommended shifting speeds

The transmission is fully synchronized and upshifting or downshifting is easy.

For the best compromise between fuel economy and vehicle performance, you should upshift or downshift at the following speeds:

2RZ–FE engine

Low altitude
—1219 m (4000 ft.) or lower

gear	km/h (mph)
1 to 2 or 2 to 1	24 (15)
2 to 3 or 3 to 2	40 (25)
3 to 4 or 4 to 3	64 (40)
4 to 5 or 5 to 4	72 (45)

High altitude
—Higher than 1219 m (4000 ft.)
Upshifting

gear	km/h (mph)
1 to 2	24 (15)
2 to 3	40 (25)/58 (36)*
3 to 4	64 (40)/72 (45)*
4 to 5	72 (45)/85 (53)*

Downshifting

gear	km/h (mph)
2 to 1	24 (15)
3 to 2	40 (25)
4 to 3	64 (40)
5 to 4	72 (45)

*: Applicable under heavy acceleration conditions.

3RZ–FE engine

Upshifting

gear	km/h (mph)
1 to 2	24 (15)
2 to 3	40 (25)/58 (36)*
3 to 4	64 (40)/72 (45)*
4 to 5	72 (45)/85 (53)*

Downshifting

gear	km/h (mph)
2 to 1	24 (15)
3 to 2	40 (25)
4 to 3	64 (40)
5 to 4	72 (45)

*: Applicable under heavy acceleration conditions.

5VZ–FE engine

gear	km/h (mph)
1 to 2 or 2 to 1	24 (15)
2 to 3 or 3 to 2	40 (25)
3 to 4 or 4 to 3	64 (40)
4 to 5 or 5 to 4	72 (45)

Downshift to the appropriate gear if acceleration is needed when you are cruising below the above downshifting speeds.

Upshifting too soon or downshifting too late will cause lugging, and possibly pinging. Regularly revving the engine to maximum speed in each gear will cause excessive engine wear and high fuel consumption.

Maximum allowable speeds

To get on a highway or to pass slower traffic, maximum acceleration may be necessary. Make sure you observe the following maximum allowable speeds in each gear:

Two–wheel drive models

2RZ–FE engine

gear	km/h	(mph)
1	48	(30)
2	88	(55)
3	136	(85)
4	165	(103)

5VZ–FE engine

gear	km/h	(mph)
1	54	(34)
2	101	(63)
3	144	(89)
4	165	(103)

Four–wheel drive models

3RZ–FE engine

gear	km/h (mph)	
	"H2" and "H4"	"L4"
1	46 (29)	17 (11)
2	86 (53)	33 (21)
3	135 (84)	52 (32)
4	165 (103)	66 (41)

5VZ–FE engine

gear	km/h (mph)	
	"H2" and "H4"	"L4"
1	48 (30)	18 (11)
2	88 (55)	34 (21)
3	128 (80)	49 (30)
4	165 (103)	72 (45)

NOTICE

Do not downshift if you are going faster than the maximum allowable speed for the next lower gear.

Good driving practice

- If it is difficult to shift into reverse, put the transmission in neutral, release the clutch pedal momentarily, and then try again.
- When towing a trailer, in order to maintain engine braking efficiency, do not use the fifth gear.

CAUTION

Be careful when downshifting on a slippery surface. Abrupt shifting could cause the vehicle to spin or skid.

NOTICE

Make sure the vehicle is completely stopped before shifting into reverse.

Four–wheel drive system—
(a) Front drive control (lever type)

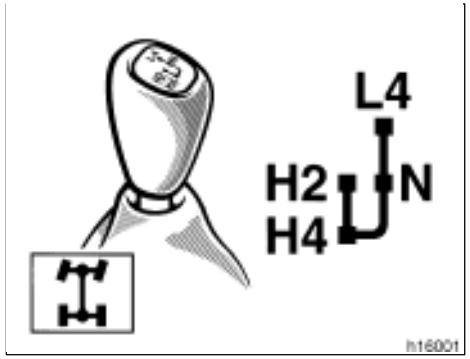

Use the front drive control lever to select the following transfer modes.

“H2” (high speed position, two–wheel drive): Lever at “H2”
Use this for normal driving on dry hard–surfaced roads. This position gives greater economy, quietest ride and least wear.

“H4” (high speed position, four–wheel drive): Lever at “H4”
Use this for normal driving on wet, icy or snow–covered roads. This position provides greater traction than two–wheel drive.

“N” (neutral position): Lever at “N”
No power is delivered to the wheels. The vehicle must be stopped.

“L4” (low speed position, four–wheel drive): Lever at “L4”
Use this for maximum power and traction. Use “L4” for climbing or descending steep hills, off–road driving, and hard pulling in sand, mud or deep snow.

The four–wheel drive indicator light comes on when the “H4”, “N” or “L4” mode is selected.

See “(d) Shifting procedure (lever type)” for further instructions.

(a) Front drive control (lever/button type)

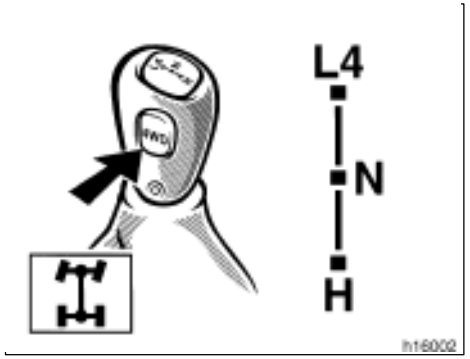

Use the front drive control lever and “4WD” button to select the following transfer modes.

“H2” (high speed position, two–wheel drive): Lever at “H”, “4WD” button left out
Use this for normal driving on dry hard–surfaced roads. This position gives greater economy, quietest ride and least wear.

“H4” (high speed position, four–wheel drive): Lever at “H”, “4WD” button pushed in.
Use this for normal driving on wet, icy or snow–covered roads. This position provides greater traction than two–wheel drive.

“N” (neutral position): Lever at “N”
No power is delivered to the wheels. The vehicle must be stopped.

“L4” (low speed position, four–wheel drive): Lever at “L4”
Use this for maximum power and traction. Use “L4” for climbing or descending steep hills, off–road driving, and hard pulling in sand, mud or deep snow.

The four–wheel drive indicator light comes on when the “H4”, “N” or “L4” mode is selected.

See “(d) Shifting procedure (lever/button type)” for further instructions.

(b) Free–wheeling hubs



To engage the free–wheeling hubs, turn the hubs to “LOCK”. To disengage, turn the hubs to “FREE”.

Make sure the triangle mark on the hub aligns with the other one at the side you wish to set.

Setting the free–wheeling hubs in “FREE” allows you to disengage the front axle and driveshaft so that they are not revolving. This reduces noise and wear when the vehicle is in two–wheel drive.

You should drive with the hubs in “LOCK” for at least 16 km (10 miles) each month. This will assure that the front drive components are lubricated.

(c) A.D.D. (automatic disconnecting differential)



Steel wheels

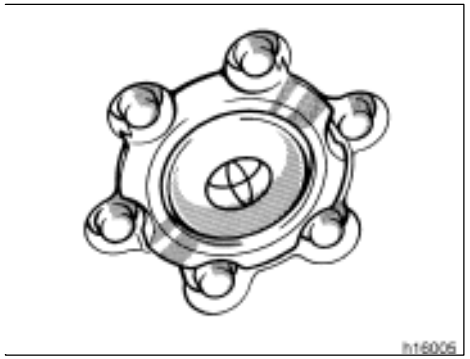

Aluminum wheels

The A.D.D. can be engaged or disengaged by the shifting operations described in “(d) Shifting procedure”.

You should drive in four–wheel drive for at least 16 km (10 miles) each month. This will assure that the front drive components are lubricated.

(d) Shifting procedure (lever type with manual transmission)

SHIFTING BETWEEN “H2” AND “H4”

With free–wheeling hubs

To shift from “H2” to “H4”, move the front drive control lever. Also, engage both the free–wheeling hubs.

This can be done when the vehicle is stopped, or moving straight ahead at speeds of 40 km/h (25 mph) or less. You need not depress the clutch pedal. If you have trouble shifting, depress or release the accelerator pedal momentarily while pushing the front drive control lever.

CAUTION

- **Never move the front drive control lever if wheels are slipping. Stop the slipping or spinning before shifting.**
- **Never drive with only one hub engaged.**

To shift from “H4” to “H2”, simply move the front drive control lever. Also, disengage both the free–wheeling hubs for continued “H2” use.

This can be done at any vehicle speed. You need not depress the clutch pedal.

If the indicator light does not go off when you shift the transfer into “H2”, drive straight ahead while accelerating or decelerating, or drive in reverse.

With A.D.D.

To shift from “H2” to “H4”, reduce your speed to less than 80 km/h (50 mph) and move the front drive control lever. You need not depress the clutch pedal.

If you have trouble shifting in cold weather, reduce your speed or stop the vehicle and reshift.

CAUTION

Never move the front drive control lever if wheels are slipping. Stop the slipping or spinning before shifting.

To shift from “H4” to “H2”, simply move the front drive control lever.

This can be done at any vehicle speed. You need not depress the clutch pedal.

If the indicator light does not go off when you shift the transfer into “H2”, drive straight ahead while accelerating or decelerating, or drive in reverse.

SHIFTING BETWEEN “H4” AND “L4”

To shift from “H4” to “L4”, stop the vehicle or reduce your speed to less than 8 km/h (5 mph). With your foot off the accelerator pedal, depress the clutch pedal and move the front drive control lever.

To shift from “L4” to “H4”, depress the clutch pedal and move the front drive control lever.

This can be done at any vehicle speed.

(d) Shifting procedure (lever type with automatic transmission)

SHIFTING BETWEEN “H2” AND “H4”

With free–wheeling hubs

To shift from “H2” to “H4”, move the front drive control lever. Also, engage both the free–wheeling hubs.

This can be done when the vehicle is stopped, or moving straight ahead at speeds of 40 km/h (25 mph) or less. If you have trouble shifting, depress or release the accelerator pedal momentarily while pushing the front drive control lever.

CAUTION

- **Never move the front drive control lever if wheels are slipping. Stop the slipping or spinning before shifting.**
- **Never drive with only one hub engaged.**

To shift from “H4” to “H2”, simply move the front drive control lever. Also, disengage both the free–wheeling hubs for continued “H2” use.

This can be done at any vehicle speed.

If the indicator light does not go off when you shift the transfer into “H2”, drive straight ahead while accelerating or decelerating, or drive in reverse.

With A.D.D.

To shift from “H2” to “H4”, reduce your speed to less than 80 km/h (50 mph) and move the front drive control lever.

If you have trouble shifting in cold weather, reduce your speed or stop the vehicle and reshift.

CAUTION

Never move the front drive control lever if wheels are slipping. Stop the slipping or spinning before shifting.

To shift from “H4” to “H2”, simply move the front drive control lever.

This can be done at any vehicle speed.

If the indicator light does not go off when you shift the transfer into “H2”, drive straight ahead while accelerating or decelerating, or drive in reverse.

(d) Shifting procedure (lever/button type with manual transmission)

SHIFTING BETWEEN "H4" AND "L4"

To shift between "H4" and "L4", stop the vehicle and put the transmission in "N". With your foot holding down the brake pedal, move the front drive control lever.

SHIFTING BETWEEN "H2" AND "H4"

To shift from "H2" to "H4", reduce your speed to less than 100 km/h (62 mph) and push in the "4WD" button. You need not depress the clutch pedal.

If the indicator light does not come on when you push in the "4WD" button, drive straight ahead while accelerating or decelerating.

If the indicator light flashes and the buzzer sounds when you push in the "4WD" button, reduce your speed or stop the vehicle and reset.

CAUTION

Never push the "4WD" button if wheels are slipping. Stop the slipping or spinning before shifting.

To shift from "H4" to "H2", push the "4WD" button again to turn it off.

This can be done at any vehicle speed. You need not depress the clutch pedal.

If the indicator light does not go off when you shift the transfer into "H2", drive straight ahead while accelerating or decelerating, or drive in reverse.

SHIFTING BETWEEN "H2" OR "H4" AND "L4"

To shift from "H2" or "H4" to "L4", stop the vehicle or reduce your speed to less than 8 km/h (5 mph). With your foot off the accelerator pedal, depress the clutch pedal and move the front drive control lever.

To shift from "L4" to "H2" or "H4", depress the clutch pedal and move the front drive control lever. When the "4WD" button is pushed in, the transfer shifts into "H4"; when the button is left out, the transfer shifts into "H2".

This can be done at any vehicle speed.

If the indicator light does not go off when you shift the transfer into "H2", drive straight ahead while accelerating or decelerating, or drive in reverse.

(d) Shifting procedure (lever/button type with automatic transmission)

SHIFTING BETWEEN "H2" AND "H4"

To shift from "H2" to "H4", reduce your speed to less than 100 km/h (62 mph) and push in the "4WD" button.

If the indicator light does not come on when you push in the "4WD" button, drive straight ahead while accelerating or decelerating.

If the indicator light flashes and the buzzer sounds when you push in the "4WD" button, reduce your speed or stop the vehicle and reset.

CAUTION

Never push the "4WD" button if wheels are slipping. Stop the slipping or spinning before shifting.

To shift from "H4" to "H2", push the "4WD" button again to turn it off.

This can be done at any vehicle speed.

If the indicator light does not go off when you shift the transfer into "H2", drive straight ahead while accelerating or decelerating, or drive in reverse.

SHIFTING BETWEEN "H2" OR "H4" AND "L4"

To shift from "H2" or "H4" to "L4", stop the vehicle and put the transmission in "N". With your foot holding down the brake pedal, move the front drive control lever.

To shift from "L4" to "H2" or "H4", stop the vehicle and put the transmission in "N". With your foot holding down the brake pedal, move the front drive control lever. When the "4WD" button is pushed in, the transfer shifts into "H4"; when the button is left out, the transfer shifts into "H2".

If the indicator light does not go off when you shift the transfer into "H2", drive straight ahead while accelerating or decelerating, or drive in reverse.

Rear differential lock system



The rear differential lock system is provided for use only when wheel spinning occurs in a ditch or on a slippery or ragged surface.

This differential lock system is effective in case one of the rear wheels is spinning.

Except for Pre Runner models—
Before using the rear differential lock system, first shift the front drive control into "L4" with the free–wheeling hubs engaged to see if it works. If this has no effect, additionally use the rear differential lock system.

CAUTION

Do not use the rear differential lock in the conditions other than above. Large steering effort and careful cornering control will be required.

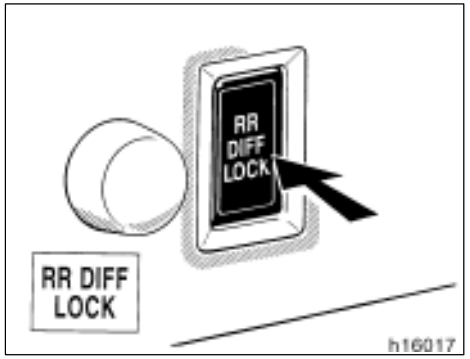

To lock the rear differential, push the switch.

Be sure to stop the wheels before locking the differential.

For easy locking, depress the clutch pedal, push the lock switch and slowly release the clutch pedal.

The indicator light will blink when the switch is turned on. Wait a few seconds for the system to complete operation. After the differential is locked, the light will stop blinking and remain on.

The anti–lock brake system does not operate when the rear differential is locked. It is normal operation for the “ABS” warning light to be on at this time.

CAUTION

- **Do not lock the differential until the wheels have stopped spinning. Otherwise, the vehicle may move in an unexpected direction when the differential lock is engaged, resulting in an accident. This may also lead to possible damage to differential lock component parts.**
- **Do not drive over 8 km/h (5 mph) when the differential is locked.**

To unlock the differential, push the switch once again.

Unlock the differential as soon as the vehicle moves out.

For easy unlocking, slightly turn the steering wheel in either direction while the vehicle is in motion.

When the differential lock is disengaged, the indicator light will go out.

Except for Pre Runner models—
The differential will also unlock if you shift the front drive control lever out of “L4”. Never forget to turn off the switch after using this feature.

To check the indicator bulb, turn the ignition key to the "ON" position, but do not start the engine.

CAUTION

Do not keep driving with the differential lock switch on.

Parking brake

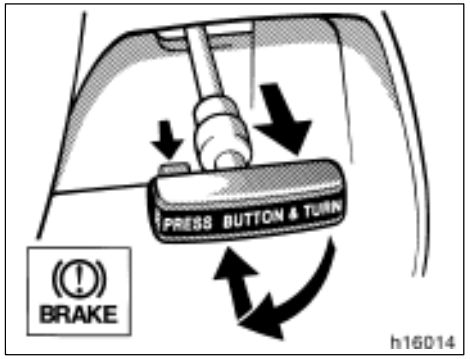

When parking, firmly apply the parking brake to avoid inadvertent creeping.

To set: Pull out on the lever. For better holding power, first depress the brake pedal and hold it while setting the parking brake.
To release: Press the lock release button, turn the lever, and push it in.

To remind you that the parking brake is set, the parking brake reminder light in the instrument panel remains on until you release the parking brake.

CAUTION

Before driving, be sure the parking brake is fully released and the parking brake reminder light is off.

Cruise control

The cruise control allows you to cruise the vehicle at a desired speed over 40 km/h (25 mph) even with your foot off the accelerator pedal.

Your cruising speed can be maintained up or down grades within the limits of engine performance, although a slight speed change may occur when driving up or down the grades. On steeper hills, a greater speed change will occur so it is better to drive without the cruise control.

CAUTION

- **To help maintain maximum control of your vehicle, do not use the cruise control when driving in heavy or varying traffic, or on slippery (rainy, icy or snow–covered) or winding roads.**
- **Avoid vehicle speed increases when driving downhill. If the vehicle speed is too fast in relation to the cruise control set speed, cancel the cruise control then downshift the transmission to use engine braking to slow down.**

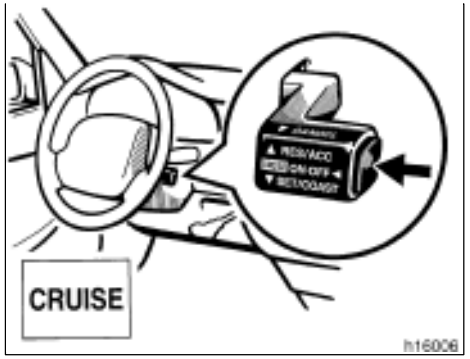

TURNING ON THE SYSTEM

To operate the cruise control, press the “CRUISE ON·OFF” button. This turns the system on. The indicator light in the instrument panel shows that you can now set the vehicle at a desired cruising speed. Another press will turn the system completely off.

CAUTION

To avoid accidental cruise control engagement, keep the “CRUISE ON·OFF” switch off when not using the cruise control.

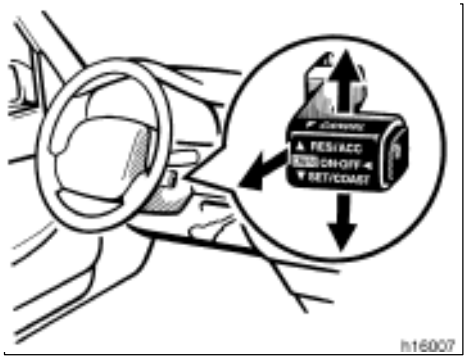

SETTING AT A DESIRED SPEED

On vehicles with automatic transmission, the transmission must be in “D” before you set the cruise control speed.

Bring your vehicle to the desired speed, push the lever down in the “SET/COAST” direction and release it. This sets the vehicle at that speed. If the speed is not satisfactory, tap the lever up for a faster speed, or tap it down for a slower speed. Each tap changes the set speed by 1.6 km/h (1.0 mph). You can now take your foot off the accelerator pedal.

If you need acceleration—for example, when passing—depress the accelerator pedal enough for the vehicle to exceed the set speed. When you release it, the vehicle will return to the speed set prior to the acceleration.

CAUTION

For manual transmission:

While driving with the cruise control on, do not shift to neutral without depressing the clutch pedal, as this may cause engine racing or overrevving.

CANCELLING THE PRESET SPEED

You can cancel the preset speed by:

a. Pulling the lever in the “CANCEL” direction and releasing it
b. Depressing the brake pedal
c. Depressing the clutch pedal (manual transmission)

If the vehicle speed falls below about 40 km/h (25 mph), the preset speed will automatically cancel out.

If the vehicle speed drops 16 km/h (10 mph) below the preset speed, the preset speed will also automatically cancel out.

If the preset speed automatically cancels out other than for the above cases, have your vehicle checked by your Toyota dealer at the earliest opportunity.

RESETTING TO A FASTER SPEED

Push the lever up in the “RES/ACC” direction and hold it. Release the lever when the desired speed is attained. While the lever is held up, the vehicle will gradually gain speed.

However, a faster way to reset is to accelerate the vehicle and then push the lever down in the “SET/COAST” direction.

RESETTING TO A SLOWER SPEED

Push the lever down in the “SET/COAST” direction and hold it. Release the lever when the desired speed is attained. While the lever is held down, the vehicle speed will gradually decrease.

However, a faster way to reset is to depress the brake pedal and then push the lever down in the “SET/COAST” direction.

On vehicles with automatic transmission, even if you turn off the overdrive switch with the cruise control on, engine braking will not be applied because the cruise control is not cancelled. To decrease the vehicle speed, reset to a slower speed with the cruise control lever or depress the brake pedal. If you use the brake pedal, cruise control is cancelled.

RESUMING THE PRESET SPEED

If the preset speed is cancelled by pulling the control lever or by depressing the brake pedal or clutch pedal, pushing the lever up in the “RES/ACC” direction will restore the speed set prior to cancellation.

However, once the vehicle speed falls below about 40 km/h (25 mph), the preset speed will not be resumed.

CRUISE CONTROL FAILURE WARNING

If the “CRUISE” indicator light in the instrument cluster flashes when using the cruise control, press the “CRUISE ON·OFF” button to turn the system off and then press it again to turn it on.

If any of the following conditions then occurs, there is some trouble in the cruise control system.

- The indicator light does not come on.
- The indicator light flashes again.
- The indicator light goes out after it comes on.

If this is the case, contact your Toyota dealer and have your vehicle inspected.

Clutch start cancel switch (four–wheel drive models with manual transmission)

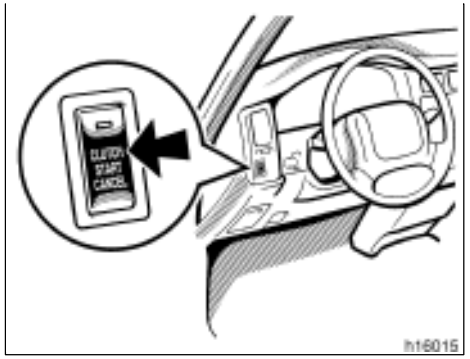

To crank the engine without depressing the clutch pedal, push the switch with the ignition on.

The switch stays on as long as the ignition is on. And it will automatically turn off when the ignition is off. An indicator light will illuminate to indicate the system is operating.

This switch cancels the clutch start system, which is designed to keep the starter motor from operating if the clutch pedal is not depressed all the way down.

The switch allows the vehicle to be driven out of difficult situations by cranking the engine with the clutch engaged.

Never use the switch for normal engine starting. Be sure to follow the starting procedure instructed in “How to start the engine” in Section 3.

SECTION 1– 7

OPERATION OF INSTRUMENTS AND CONTROLS

Car audio system

Reference 114
Using your audio system 114
Car audio system operating hints 134

Reference

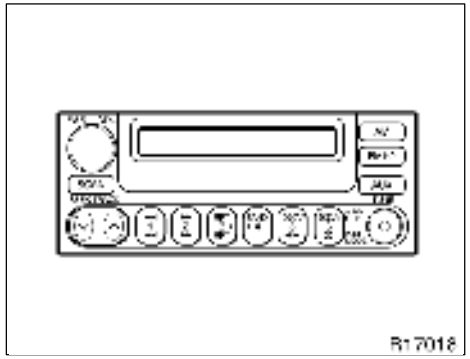

Type 1: AM·FM ETR radio/cassette·compact disc auto changer controller

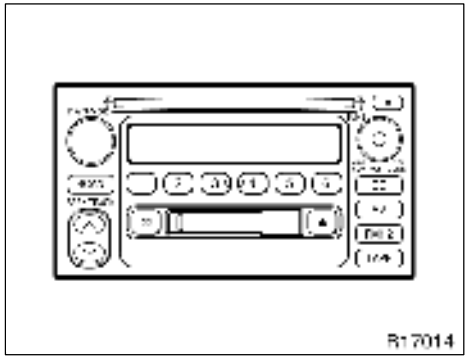

Type 3: AM·FM ETR radio/cassette player/compact disc player/compact disc auto changer controller

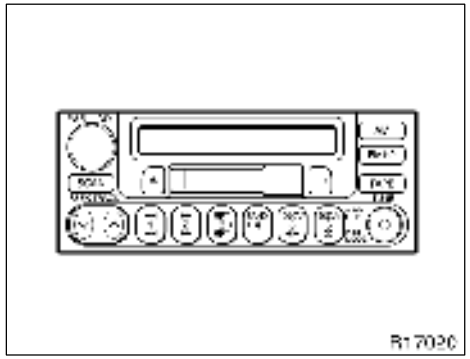

Type 2: AM·FM ETR radio/cassette player/compact disc auto changer controller

Using your audio system——Some basics

This section describes some of the basic features on Toyota audio systems. Some information may not pertain to your system.

Your audio system works when the ignition key is in the “ACC” or “ON” position.

TURNING THE SYSTEM ON AND OFF

Push “PWR/VOL” or “PWR·VOL” to turn the audio system on and off.

Push “AM”, “FM1·2”, “TAPE”, “CD” or “AUX” to turn on that function without pushing “PWR/VOL” or “PWR·VOL”.

You can turn on each player by inserting a cassette tape or compact disc.

You can turn off each player by ejecting the cassette tape or compact disc. If the audio system was previously off, then the entire audio system will be turned off when you eject the cassette tape or compact disc. If the another function was previously playing, it will come on again.

SWITCHING BETWEEN FUNCTIONS

Push “AM”, “FM1·2”, “TAPE”, “CD” or “AUX” if the system is already on but you want to switch from one function to another.

TONE AND BALANCE

For details about your system's tone and balance controls, see the description of your own system.

Tone

How good an audio program sounds to you is largely determined by the mix of the treble and bass levels. In fact, different kinds of music and vocal programs usually sound better with different mixes of treble and bass.

Balance

A good balance of the left and right stereo channels and of the front and rear sound levels is also important.

Keep in mind that if you are listening to a stereo recording or broadcast, changing the right/left balance will increase the volume of one group of sounds while decreasing the volume of another.

YOUR RADIO ANTENNA

To remove an antenna, carefully turn it counterclockwise.

To lower the power antenna, turn off the audio system by pushing "PWR/VOL" or "PWR·VOL", or turn the ignition key to "LOCK".

On some models, the power antenna automatically retracts when the radio mode is switched off to turn on the cassette tape player.

YOUR CASSETTE PLAYER

When you insert a cassette, the exposed tape should be to the right.

NOTICE

Do not oil any part of the player and do not insert anything other than cassette tapes into the slot, or the tape player may be damaged.

YOUR COMPACT DISC PLAYER

When you insert a disc, gently push it in with the label side up. (The player will automatically eject a disc if the label side is down.) The compact disc player will play from track 1 through the end of the disc. Then it will play from track 1 again. On models with the compact disc auto changer, next disc will be played from track 1.

NOTICE

Never try to disassemble or oil any part of the compact disc player. Do not insert anything except a compact disc into the slot.

The player is intended for use with 12 cm (5 in.) discs only.

—Controls and features

▶Type 1

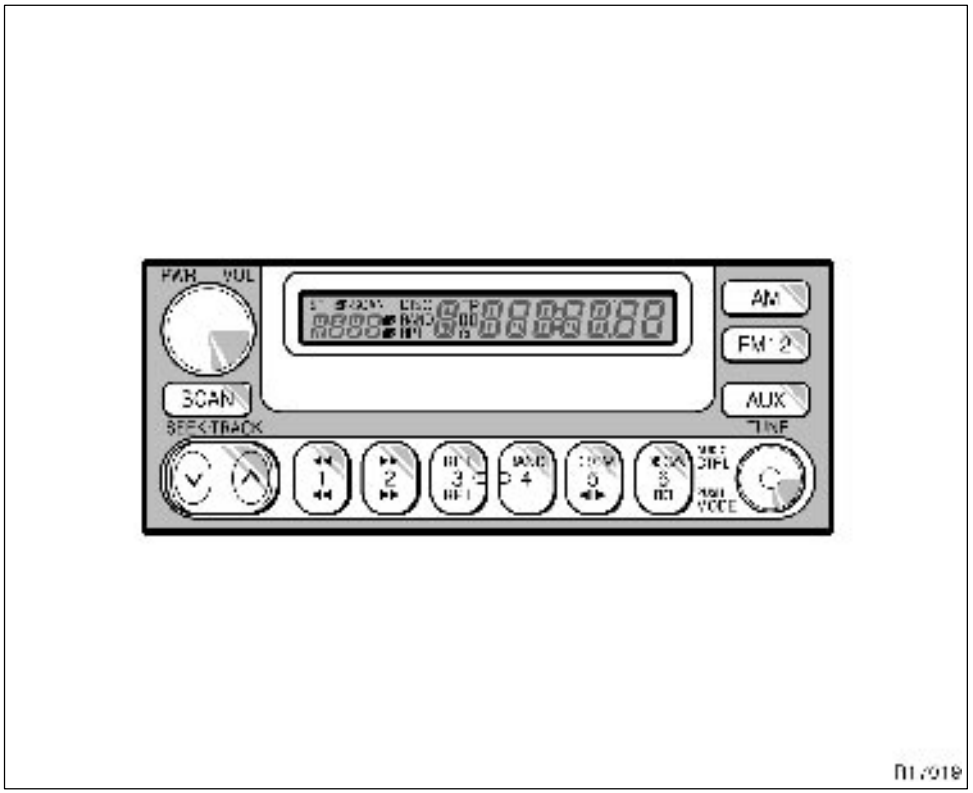

Details of specific buttons, controls, and features are described in the alphabetical listing that follows.

1 2 3 4 5 6 (Preset buttons)

These buttons are used to preset and tune in radio stations.

To preset a station to a button: Tune in the desired station (see “TUNE” knob or “SEEK” button). Push and hold down the button until you hear a beep—this will set the station to the button. The button number will appear on the display.

To tune in to a preset station: Push the button for the station you want. The button number and station frequency will appear on the display.

These systems can store one AM and two FM stations for each button (The display will show “AM”, “FM1” or “FM2” when you push “AM” “FM1·2”).

(Program)

Push “” to select the other side of a cassette tape. The display indicates which side is currently selected (“” indicates top side, “” indicates bottom side).

Auto–reverse feature: After the cassette player reaches the end of a tape side, it automatically reverses and begins to play the other side. This is true whether the cassette was playing or fast forwarding.

(Reverse/Fast forward buttons)

Cassette Player

Push the fast forward button to fast forward a cassette tape. “FF” will appear on the display. Push the reverse button to rewind a tape. “REW” will appear on the display.

To stop the tape while it is fast forwarding, push the fast forward button or “TAPE”; to stop the tape while it is rewinding, push the reverse button or “TAPE”.

If a tape side rewinds completely, the cassette player will stop and then play that same side. If a tape fast forwards completely, the cassette player will play the other side of the tape, using the auto–reverse feature.

Compact Disc Player

If you want to fast forward or reverse through a compact disc track, push and hold in the fast forward or reverse button. When you release the button, the compact disc player will resume playing.

AM

Push “AM” to turn on the radio and select the AM band. “AM” will appear on the display.

If the audio system is off, you can turn on the radio by pushing “AM”. Also, push “AM” to switch from cassette or compact disc operation to radio operation.

CTRL / MODE (Audio control and mode adjustment)

Manual tone adjustment function—

This knob is used to adjust the tone manually.

For low–pitch tone adjustment, push “CTRL / MODE” repeatedly until “BAS” appears on the display. Then turn the knob to suit your preference.

The display will show the range from “BAS –5” to “BAS 5”.

For high–pitch tone adjustment, push “CTRL / MODE” repeatedly until “TRE” appears on the display. Then turn the knob to suit your preference.

The display will show the range from “TRE –5” to “TRE 5”.

Sound balance adjustment function—

This knob is also used to adjust the sound balance between the front and rear, and the right and left speakers.

For front/rear adjustment, push “CTRL / MODE” repeatedly until “FAd” appears on the display. Then turn the knob to adjust the front/rear balance.

The display will show the range from “FAd–F7” to “FAd–R7”.

For left/right adjustment, push “CTRL / MODE” repeatedly until “BAL” appears on the display. Then turn the knob to adjust the left/right balance.

The display will show the range from “BAL–L7” to “BAL–R7”.

AUX (Auxiliary button)

This button is used to operate each player when a cassette tape player, compact disc player or compact disc auto changer is equipped with this radio player.

With cassette tape player

Push “AUX” to switch from radio to cassette operation. If the audio system is off, you can turn on the cassette player by pushing “AUX”. In both cases, a cassette must already be loaded in the player.

With compact disc player or compact disc auto changer

Push “AUX” to switch from radio to compact disc operation. If the audio system is off, you can turn on the compact disc player by pushing “AUX”. In both cases, a disc must already be loaded in the player.

When the audio is set into compact disc operation, the display shows the track or, track and disc number currently being played. Each time you push “AUX”, the system changes to the automatic changer.

If the player malfunctions, your audio system will display one of the six following error messages.

If “WAIT” appears on the display, it indicates that the inside of the player unit may be too hot due to the very high ambient temperature. Remove the disc or magazine from the player and allow the player to cool down.

If “Err 1” appears on the display, it indicates the disc is dirty, damaged, or it was inserted up–side down. Clean the disc or insert it correctly.

If “Err 2” appears on the display, it indicates no disc is loaded inside the magazine. Insert a disc.

If “Err 3” or “Err 4” appears on the display, it indicates there is a trouble inside the system. Eject the disc or magazine. Set the disc or magazine again.

If “OPEn” appears on the display, it indicates the compact disc auto changer lid is open. Close the compact disc auto changer lid.

If the malfunction is not rectified, take your vehicle to your Toyota dealer.

DISC ∨∧

Compact disc auto changer only—

By using this button, you can select a disc you wish to listen to.

Push either side of the button until the number of the disc you want to listen to appears on the display.

Dolby® B NR*

If you are listening to a tape that was recorded with Dolby® B Noise Reduction, push the button marked with the double–D symbol. The double–D symbol will appear on the display. Push the button again to turn off Dolby® B NR.

The Dolby NR mode reduces tape noise by about 10 dB. For best sound reproduction, play your tapes with this button on or off according to the mode used for recording the tape.

*: Dolby noise reduction manufactured under license from Dolby Laboratories Licensing Corporation. “DOLBY” and the double D symbol ⁞⁞ are trademarks of Dolby Laboratories Licensing Corporation.

FM1·2

Push “FM1·2” to turn on the radio and select the FM band. “FM1” or “FM2” will appear on the display. This system allows you to set twelve FM stations, two for each button.

If the audio system is off, you can turn on the radio by pushing “FM1·2”. Also, push “FM1·2” to switch from cassette or compact disc operation to radio operation.

PWR/VOL (Power/Volume)

Push “PWR/VOL” to turn the audio system on and off. Turn “PWR/VOL” to adjust the volume.

RAND (Random)

There are two random features—you can either listen to the tracks on all the compact discs in the magazine in random order, or only listen to the tracks on a specific compact disc in random order.

To randomly play the tracks on the disc: Quickly push and release “RAND”. “RAND” will appear on the display. The disc you are listening to will play in random order. If you hear a beep, you held the button too long, and the player will play all the tracks in the magazine in random order. To turn off the random feature, push “RAND” again.

Compact disc auto changer only—

To randomly play all the tracks in the magazine:
Push and hold “RAND” until you hear a beep. “ ·RAND” will appear on the display and the player will perform all the tracks on all the discs in the magazine in random order. To turn off the random feature, push “RAND” again.

RPT (Repeat)

Cassette Player

Push “RPT” while the track is playing. “RPT” will appear on the display. When the track ends, it will automatically be rewound and replayed. This process will be continued until you push the button again to turn off the repeat feature.

There must be at least 3 seconds of blank space between tracks in order for the repeat feature to work correctly.

Compact Disc Player

There are two repeat features—you can either replay a disc track or a whole compact disc.

Repeating a track:
Quickly push and release “RPT” while the track is playing. “RPT” will appear on the display. If you hear a beep, you held the button too long, and the player will repeat the whole disc. When the track ends, it will automatically be replayed. This process will be continued until you push the button again to turn off the repeat feature.

Compact disc auto changer only—

Repeating a disc:
Push and hold “RPT” until you hear a beep. “ ·RPT” will appear on the display. The player will repeat all the tracks on the disc you are listening to. When the disc ends, the player will automatically go back to the top track of the disc and replay. This process will be continued until you push the button again to turn off the repeat feature.

SCAN

Radio

You can either scan all the frequencies on a band or scan only the preset stations for that band.

To scan the preset stations:
Push and hold “SCAN” until you hear a beep. The radio will tune in the next preset station up the band, stay there for 5 seconds, and then move to the next preset station. To select a station, push “SCAN” again.

To scan all the frequencies:
Quickly push and release “SCAN”. If you hear a beep, you held the button too long, and the radio will scan the preset stations. The radio will find the next station up the station band, stay there for 5 seconds, and then scan again. To select a station, push “SCAN” again.

Compact disc player

There are two scan features—you can either scan the tracks on a specific disc or scan the first tracks of all the discs in the magazine.

Scanning the tracks on a disc:
Quickly push and release “SCAN”. “SCAN” will appear on the display and the player will scan all the tracks on the disc you are listening to. If you hear a beep, you held the button too long, and the player will scan the first track of all the discs in the magazine. To select a track, push “SCAN” again. If the player scanned all the tracks on the disc, it will stop scanning.

Compact disc auto changer only—

Scanning the first track of all the discs in the magazine:
Push “SCAN” until you hear a beep. “ ·SCAN” will appear on the display and the player will perform the first track of the next disc. To select a disc, push the “SCAN” again. If the player has scanned all the discs, it will stop scanning.

SEEK (Seeking)

Radio

In the seek mode, the radio finds and plays the next station up or down the station band.

To seek a station, quickly push and release the “∧” or “∨” under the “SEEK”. Do this again to find another station.

Cassette Player

By using this button, you can skip up or down to a different track.

You can skip up to nine tracks at a time.

Push the up or down side of the button. “FF 1” or “REW 1” will appear on the display.

Next, push either side of the track button until the number on the display reaches the number of tracks you want to skip. If you push the button ten times, the skip feature will be turned off.

When counting the number of tracks you want to rewind, remember to count the current track as well. For example, if you want to rewind to a song that is two before the song you are listening to, push on the down side of the button until “REW 3” appears on the display.

If you have pushed the track button more than you wanted to, push the other side of the button. The track number will be reduced.

The track number you select is not valid if it is higher than the number of tracks remaining on the current cassette side.

- After the beginning of the tape is reached, the player will automatically start playing the same side.

- After the end of the tape is reached, the player will automatically reverse sides and start playing the other side.

There must be at least 3 seconds of blank space between tracks for the track button to work correctly. In addition, the feature may not work well with some spoken word, live, or classical recordings.

ST (Stereo reception) display

Your radio automatically changes to stereo reception when a stereo broadcast is received. “ST” appears on the display. If the signal becomes weak, the radio reduces the amount of channel separation to prevent the weak signal from creating noise. If the signal becomes extremely weak, the radio switches from stereo to mono reception.

TRACK (Track up/down button): Compact disc player

By using this button, you can skip up or down to a different track.

Push either side of the track button until the number of the track you want to listen to appears on the display. If you want to return to the beginning of the current track, push the down side of the button one time, quickly.

TUNE (Tuning)

Your Toyota has an electronic tuning radio (ETR). Turn the knob clockwise to step up the frequency. Turn the knob counterclockwise to step down the frequency.

▶Type 2



Details of specific buttons, controls, and features are described in the alphabetical listing that follows.

1 2 3 4 5 6 (Preset buttons)

These buttons are used to preset and tune in radio stations.

To preset a station to a button: Tune in the desired station (see “TUNE” knob or “SEEK” button). Push and hold down the button until you hear a beep—this will set the station to the button. The button number will appear on the display.

To tune in to a preset station: Push the button for the station you want. The button number and station frequency will appear on the display.

These systems can store one AM and two FM stations for each button (The display will show “AM”, “FM1” or “FM2” when you push “AM” “FM1·2”).

(Eject button)

Push the cassette tape eject button to eject a cassette. Push the compact disc eject button to eject a compact disc.

After you turn the ignition to “LOCK”, you will be able to eject a cassette or disc but you will not be able to reinsert it.

(Program)

Push “” to select the other side of a cassette tape. The display indicates which side is currently selected (“” indicates top side, “” indicates bottom side).

Auto–reverse feature: After the cassette player reaches the end of a tape side, it automatically reverses and begins to play the other side. This is true whether the cassette was playing or fast forwarding.

(Reverse/Fast forward buttons)

Cassette Player

Push the fast forward button to fast forward a cassette tape. “FF” will appear on the display. Push the reverse button to rewind a tape. “REW” will appear on the display.

To stop the tape while it is fast forwarding, push the fast forward button or “TAPE”; to stop the tape while it is rewinding, push the reverse button or “TAPE”.

If a tape side rewinds completely, the cassette player will stop and then play that same side. If a tape fast forwards completely, the cassette player will play the other side of the tape, using the auto–reverse feature.

Compact Disc Player

If you want to fast forward or reverse through a compact disc track, push and hold in the fast forward or reverse button. When you release the button, the compact disc player will resume playing.

AM

Push “AM” to turn on the radio and select the AM band. “AM” will appear on the display.

If the audio system is off, you can turn on the radio by pushing “AM”. Also, push “AM” to switch from cassette or compact disc operation to radio operation.

CTRL / MODE (Audio control and mode adjustment)

Manual tone adjustment function—

This knob is used to adjust the tone manually.

For low–pitch tone adjustment, push “CTRL / MODE” repeatedly until “BAS” appears on the display. Then turn the knob to suit your preference.

The display will show the range from “BAS –5” to “BAS 5”.

For high–pitch tone adjustment, push "CTRL / MODE" repeatedly until "TRE" appears on the display. Then turn the knob to suit your preference.

The display will show the range from "TRE –5" to "TRE 5".

Sound balance adjustment function—

This knob is also used to adjust the sound balance between the front and rear, and the right and left speakers.

For left/right adjustment, push "CTRL / MODE" repeatedly until "BAL" appears on the display. Then turn the knob to adjust the left/right balance.

The display will show the range from "BAL–L7" to "BAL–R7".

Models with rear speakers—for front/rear adjustment, push "CTRL / MODE" repeatedly until "FAd" appears on the display. Then turn the knob to adjust the front/rear balance.

The display will show the range from "FAd–F7" to "FAd–R7".

CD (Compact Disc)

Push "CD" to switch from radio or cassette operation to compact disc operation. If the audio system is off, you can turn on the compact disc player by pushing "CD". In both cases, a disc must already be loaded in the player.

When the audio is set into compact disc operation, the display shows the track or, track and disc number currently being played. Each time you push "CD", the system changes to the automatic changer.

If the player malfunctions, your audio system will display one of the six following error messages.

If "WAIT" appears on the display, it indicates that the inside of the player unit may be too hot due to the very high ambient temperature. Remove the disc or magazine from the player and allow the player to cool down.

If "Err 1" appears on the display, it indicates the disc is dirty, damaged, or it was inserted up–side down. Clean the disc or insert it correctly.

If "Err 2" appears on the display, it indicates no disc is loaded inside the magazine. Insert a disc.

If "Err 3" or "Err 4" appears on the display, it indicates there is a trouble inside the system. Eject the disc or magazine. Set the disc or magazine again.

If "OPEn" appears on the display, it indicates the compact disc auto changer lid is open. Close the compact disc auto changer lid.

If the malfunction is not rectified, take your vehicle to your Toyota dealer.

DISC ∨∧

Compact disc auto changer only—

By using this button, you can select a disc you wish to listen to.

Push either side of the button until the number of the disc you want to listen to appears on the display.

Dolby® ▯▯ B NR*

If you are listening to a tape that was recorded with Dolby® B Noise Reduction, push the button marked with the double–D symbol. The double–D symbol will appear on the display. Push the button again to turn off Dolby® B NR.

The Dolby NR mode reduces tape noise by about 10 dB. For best sound reproduction, play your tapes with this button on or off according to the mode used for recording the tape.

*: Dolby noise reduction manufactured under license from Dolby Laboratories Licensing Corporation. “DOLBY” and the double D symbol ⁞⁞ are trademarks of Dolby Laboratories Licensing Corporation.

FM1·2

Push “FM1·2” to turn on the radio and select the FM band. “FM1” or “FM2” will appear on the display. This system allows you to set twelve FM stations, two for each button.

If the audio system is off, you can turn on the radio by pushing “FM1·2”. Also, push “FM1·2” to switch from cassette or compact disc operation to radio operation.

PWR/VOL (Power/Volume)

Push “PWR/VOL” to turn the audio system on and off. Turn “PWR/VOL” to adjust the volume.

RAND (Random)

There are two random features—you can either listen to the tracks on all the compact discs in the magazine in random order, or only listen to the tracks on a specific compact disc in random order.

To randomly play the tracks on a disc:
Quickly push and release “RAND”. “RAND” will appear on the display. The disc you are listening to will play in random order. If you hear a beep, you held the button too long, and the player will play all the tracks in the magazine in random order. To turn off the random feature, push “RAND” again.

Compact disc auto changer only—

To randomly play all the tracks in the magazine:
Push and hold “RAND” until you hear a beep. “ ·RAND” will appear on the display and the player will perform all the tracks on all the discs in the magazine in random order. To turn off the random feature, push “RAND” again.

RPT (Repeat)

Cassette Player

Push “RPT” while the track is playing. “RPT” will appear on the display. When the track ends, it will automatically be rewound and replayed. This process will be continued until you push the button again to turn off the repeat feature.

There must be at least 3 seconds of blank space between tracks in order for the repeat feature to work correctly.

Compact Disc Player

There are two repeat features—you can either replay a disc track or a whole compact disc.

Repeating a track:
Quickly push and release “RPT” while the track is playing. “RPT” will appear on the display. If you hear a beep, you held the button too long, and the player will repeat the whole disc. When the track ends, it will automatically be replayed. This process will be continued until you push the button again to turn off the repeat feature.

Compact disc auto changer only—

Repeating a disc:
Push and hold “RPT” until you hear a beep. “ ·RPT” will appear on the display. The player will repeat all the tracks on the disc you are listening to. When the disc ends, the player will automatically go back to the top track of the disc and replay. This process will be continued until you push the button again to turn off the repeat feature.

SCAN

Radio

You can either scan all the frequencies on a band or scan only the preset stations for that band.

To scan the preset stations:
Push and hold “SCAN” until you hear a beep. The radio will tune in the next preset station up the band, stay there for 5 seconds, and then move to the next preset station. To select a station, push “SCAN” again.

To scan all the frequencies:
Quickly push and release “SCAN”. If you hear a beep, you held the button too long, and the radio will scan the preset stations. The radio will find the next station up the station band, stay there for 5 seconds, and then scan again. To select a station, push “SCAN” again.

Compact disc player

There are two scan features—you can either scan the tracks on a specific disc or scan the first tracks of all the discs in the magazine.

Scanning the tracks on a disc:
Quickly push and release “SCAN”. “SCAN” will appear on the display and the player will scan all the tracks on the disc you are listening to. If you hear a beep, you held the button too long, and the player will scan the first track of all the discs in the magazine. To select a track, push “SCAN” again. If the player scanned all the tracks on the disc, it will stop scanning.

Compact disc auto changer only—

Scanning the first track of all the discs in the magazine:
Push “SCAN” until you hear a beep. “ ·SCAN” will appear on the display and the player will perform the first track of the next disc. To select a disc, push the “SCAN” again. If the player has scanned all the discs, it will stop scanning.

SEEK (Seeking)

Radio

In the seek mode, the radio finds and plays the next station up or down the station band.

To seek a station, quickly push and release the “∧” or “∨” under the “SEEK”. Do this again to find another station.

Cassette Player

By using this button, you can skip up or down to a different track.

You can skip up to nine tracks at a time.

Push the up or down side of the button. “FF 1” or “REW 1” will appear on the display.

Next, push either side of the track button until the number on the display reaches the number of tracks you want to skip. If you push the button ten times, the skip feature will be turned off.

When counting the number of tracks you want to rewind, remember to count the current track as well. For example, if you want to rewind to a song that is two before the song you are listening to, push on the down side of the button until “REW 3” appears on the display.

If you have pushed the track button more than you wanted to, push the other side of the button. The track number will be reduced.

The track number you select is not valid if it is higher than the number of tracks remaining on the current cassette side.

- After the beginning of the tape is reached, the player will automatically start playing the same side.

- After the end of the tape is reached, the player will automatically reverse sides and start playing the other side.

There must be at least 3 seconds of blank space between tracks for the track button to work correctly. In addition, the feature may not work well with some spoken word, live, or classical recordings.

ST (Stereo reception) display

Your radio automatically changes to stereo reception when a stereo broadcast is received. “ST” appears on the display. If the signal becomes weak, the radio reduces the amount of channel separation to prevent the weak signal from creating noise. If the signal becomes extremely weak, the radio switches from stereo to mono reception.

TAPE

Push “TAPE” to switch from radio or compact disc operation to cassette operation. If the audio system is off, you can turn on the cassette player by pushing “TAPE”. In both cases, a cassette must already be loaded in the player.

TRACK (Track up/down button): Compact disc player

By using this button, you can skip up or down to a different track.

Push either side of the track button until the number of the track you want to listen to appears on the display. If you want to return to the beginning of the current track, push the down side of the button one time, quickly.

TUNE (Tuning)

Your Toyota has an electronic tuning radio (ETR). Turn the knob clockwise to step up the frequency. Turn the knob counterclockwise to step down the frequency.

▶Type 3



Details of specific buttons, controls, and features are described in the alphabetical listing that follows.

1 2 3 4 5 6 (Preset buttons)

These buttons are used to preset and tune in radio stations.

To preset a station to a button: Tune in the desired station (see “TUNE” knob or “SEEK” button). Push and hold down the button until you hear a beep—this will set the station to the button. The button number will appear on the display.

To tune in to a preset station: Push the button for the station you want. The button number and station frequency will appear on the display.

These systems can store one AM and two FM stations for each button (The display will show “AM”, “FM1” or “FM2” when you push “AM” “FM1·2”).

(Eject button)

Push the cassette tape eject button to eject a cassette. Push the compact disc eject button to eject a compact disc.

After you turn the ignition to “LOCK”, you will be able to eject a cassette or disc but you will not be able to reinsert it.

(Program)

Push “” to select the other side of a cassette tape. The display indicates which side is currently selected (“” indicates top side, “” indicates bottom side).

Auto–reverse feature: After the cassette player reaches the end of a tape side, it automatically reverses and begins to play the other side. This is true whether the cassette was playing or fast forwarding.

(Reverse/Fast forward buttons)

Cassette Player

Push the fast forward button to fast forward a cassette tape. “FF” will appear on the display. Push the reverse button to rewind a tape. “REW” will appear on the display.

To stop the tape while it is fast forwarding, push the fast forward button or “TAPE”; to stop the tape while it is rewinding, push the reverse button or “TAPE”.

If a tape side rewinds completely, the cassette player will stop and then play that same side. If a tape fast forwards completely, the cassette player will play the other side of the tape, using the auto–reverse feature.

Compact Disc Player

If you want to fast forward or reverse through a compact disc track, push and hold in the fast forward or reverse button. When you release the button, the compact disc player will resume playing.

AM

Push “AM” to turn on the radio and select the AM band. “AM” will appear on the display.

If the audio system is off, you can turn on the radio by pushing “AM”. Also, push “AM” to switch from cassette or compact disc operation to radio operation.

CONTROL / MODE (Audio control and mode adjustment)

Manual tone adjustment function—

This knob is used to adjust the tone manually.

For low–pitch tone adjustment, push "CONTROL / MODE" repeatedly until "BAS" appears on the display. Then turn the knob to suit your preference.

The display will show the range from "BAS –5" to "BAS 5".

For middle–pitch tone adjustment, push "CONTROL / MODE" repeatedly until "MId" appears on the display. Then turn the knob to suit your preference.

The display will show the range from "MId –5" to "MId 5".

For high–pitch tone adjustment, push "CONTROL / MODE" repeatedly until "TRE" appears on the display. Then turn the knob to suit your preference.

The display will show the range from "TRE –5" to "TRE 5".

Sound balance adjustment function—

This knob is also used to adjust the sound balance between the front and rear, and the right and left speakers.

For front/rear adjustment, push "CONTROL / MODE" repeatedly until "FAd" appears on the display. Then turn the knob to adjust the front/rear balance.

The display will show the range from "FAd–F7" to "FAd–R7".

For left/right adjustment, push "CONTROL / MODE" repeatedly until "BAL" appears on the display. Then turn the knob to adjust the left/right balance.

The display will show the range from "BAL–L7" to "BAL–R7".

CD (Compact Disc)

Push "CD" to switch from radio or cassette operation to compact disc operation. If the audio system is off, you can turn on the compact disc player by pushing "CD". In both cases, a disc must already be loaded in the player.

When the audio is set into compact disc operation, the display shows the track or, track and disc number currently being played. Each time you push "CD", the system changes to the automatic changer.

If the player malfunctions, your audio system will display one of the six following error messages.

If "WAIT" appears on the display, it indicates that the inside of the player unit may be too hot due to the very high ambient temperature. Remove the disc or magazine from the player and allow the player to cool down.

If "Err 1" appears on the display, it indicates the disc is dirty, damaged, or it was inserted up–side down. Clean the disc or insert it correctly.

If "Err 2" appears on the display, it indicates no disc is loaded inside the magazine. Insert a disc.

If "Err 3" or "Err 4" appears on the display, it indicates there is a trouble inside the system. Eject the disc or magazine. Set the disc or magazine again.

If "OPEn" appears on the display, it indicates the compact disc auto changer lid is open. Close the compact disc auto changer lid.

If the malfunction is not rectified, take your vehicle to your Toyota dealer.

DISC ∨∧

Compact disc auto changer only—

By using this button, you can select a disc you wish to listen to.

Push either side of the button until the number of the disc you want to listen to appears on the display.

Dolby® B NR*

If you are listening to a tape that was recorded with Dolby® B Noise Reduction, push the button marked with the double–D symbol. The double–D symbol will appear on the display. Push the button again to turn off Dolby® B NR.

The Dolby NR mode reduces tape noise by about 10 dB. For best sound reproduction, play your tapes with this button on or off according to the mode used for recording the tape.

*: Dolby noise reduction manufactured under license from Dolby Laboratories Licensing Corporation. “DOLBY” and the double D symbol are trademarks of Dolby Laboratories Licensing Corporation.

FM1·2

Push “FM1·2” to turn on the radio and select the FM band. “FM1” or “FM2” will appear on the display. This system allows you to set twelve FM stations, two for each button.

If the audio system is off, you can turn on the radio by pushing “FM1·2”. Also, push “FM1·2” to switch from cassette or compact disc operation to radio operation.

PWR·VOL (Power and Volume)

Push “PWR·VOL” to turn the audio system on and off. Turn “PWR·VOL” to adjust the volume.

RAND (Random)

There are two random features—you can either listen to the tracks on all the compact discs in the magazine in random order, or only listen to the tracks on a specific compact disc in random order.

To randomly play the tracks on a disc: Quickly push and release “RAND”. “RAND” will appear on the display. The disc you are listening to will play in random order. If you hear a beep, you held the button too long, and the player will play all the tracks in the magazine in random order. To turn off the random feature, push this button again.

Compact disc auto changer only—

To randomly play all the tracks in the magazine:
Push and hold “RAND” until you hear a beep. “RAND” will appear on the display and the player will perform all the tracks on all the discs in the magazine in random order. To turn off the random feature, push this button again.

RPT (Repeat)

Cassette Player

Push “RPT” while the track is playing. “RPT” will appear on the display. When the track ends, it will automatically be rewound and replayed. This process will be continued until you push the button again to turn off the repeat feature.

There must be at least 3 seconds of blank space between tracks in order for the repeat feature to work correctly.

Compact Disc Player

There are two repeat features—You can either replay a disc track or a whole compact disc.

Repeating a track:

Quickly push and release "RPT" while the track is playing. "RPT" will appear on the display. If you hear a beep, you held the button too long, and the player will repeat the whole disc. When the track ends, it will automatically be replayed. This process will be continued until you push the button again to turn off the repeat feature.

Compact disc auto changer only—

Repeating a disc:

Push and hold "RPT" until you hear a beep. "RPT" will appear on the display. The player will repeat all the tracks on the disc you are listening to. When the disc ends, the player will automatically go back to the top track of the disc and replay. This process will be continued until you push the button again to turn off the repeat feature.

SCAN

Radio

You can either scan all the frequencies on a band or scan only the preset stations for that band.

To scan the preset stations:
Push and hold "SCAN" until you hear a beep. The radio will tune in the next preset station up the band, stay there for 5 seconds, and then move to the next preset station. To select a station, push "SCAN" again.

To scan all the frequencies:
Quickly push and release "SCAN". If you hear a beep, you held the button too long, and the radio will scan the preset stations. The radio will find the next station up the station band, stay there for 5 seconds, and then scan again. To select a station, push "SCAN" again.

Compact disc player

There are two scan features—you can either scan the tracks on a specific disc or scan the first tracks of all the discs in the magazine.

Scanning the tracks on a disc:
Quickly push and release "SCAN". "SCAN" will appear on the display and the player will scan all the tracks on the disc you are listening to. If you hear a beep, you held the button too long, and the player will scan the first track of all the discs in the magazine. To select a track, push "SCAN" again. If the player scanned all the tracks on the disc, it will stop scanning.

Compact disc auto changer only—

Scanning the first track of all the discs in the magazine:
Push "SCAN" until you hear a beep. "·SCAN" will appear on the display and the player will perform the first track of the next disc. To select a disc, push the "SCAN" again. If the player has scanned all the discs, it will stop scanning.

SEEK (Seeking)

Radio

In the seek mode, the radio finds and plays the next station up or down the station band.

To seek a station, quickly push and release the “∧” or “∨” under the “SEEK”. Do this again to find another station.

Cassette Player

By using this button, you can skip up or down to a different track.

You can skip up to nine tracks at a time.

Push the up or down side of the button. “FF 1” or “REW 1” will appear on the display.

Next, push either side of the track button until the number on the display reaches the number of tracks you want to skip. If you push the button ten times, the skip feature will be turned off.

When counting the number of tracks you want to rewind, remember to count the current track as well. For example, if you want to rewind to a song that is two before the song you are listening to, push on the down side of the button until “REW 3” appears on the display.

If you have pushed the track button more than you wanted to, push the other side of the button. The track number will be reduced.

The track number you select is not valid if it is higher than the number of tracks remaining on the current cassette side.

- After the beginning of the tape is reached, the player will automatically start playing the same side.
- After the end of the tape is reached, the player will automatically reverse sides and start playing the other side.

There must be at least 3 seconds of blank space between tracks for the track button to work correctly. In addition, the feature may not work well with some spoken word, live, or classical recordings.

ST (Stereo reception) display

Your radio automatically changes to stereo reception when a stereo broadcast is received. “ST” appears on the display. If the signal becomes weak, the radio reduces the amount of channel separation to prevent the weak signal from creating noise. If the signal becomes extremely weak, the radio switches from stereo to mono reception.

TAPE

Push “TAPE” to switch from radio or compact disc operation to cassette operation. If the audio system is off, you can turn on the cassette player by pushing “TAPE”. In both cases, a cassette must already be loaded in the player.

TRACK (Track up/down button): Compact disc player

By using this button, you can skip up or down to a different track.

Push either side of the track button until the number of the track you want to listen to appears on the display. If you want to return to the beginning of the current track, push the down side of the button one time, quickly.

TUNE (Tuning)

Your Toyota has an electronic tuning radio (ETR). Turn the knob clockwise to step up the frequency. Turn the knob counterclockwise to step down the frequency.

⏏ (Eject button)

Push this button to eject a compact disc.

After you turn the ignition to "LOCK", you will be able to eject a disc but you will not be able to reinsert it.

DISC IN (Disc indicator)

When the compact disc is inserted, the disc indicator on the right side of "DISC IN" turns on.

Car audio system operating hints

NOTICE

To ensure the correct audio system operation:

- ***Be careful not to spill beverages over the audio system.***
- ***Do not put anything other than a cassette tape or Compact Disc into the slot.***
- ***The use of cellular phone inside or near the vehicle may cause a noise from the speakers of the audio system which you are listening to. However, this does not indicate a malfunction.***

RADIO RECEPTION

Usually, a problem with radio reception does not mean there is a problem with your radio—it is just the normal result of conditions outside the vehicle.

For example, nearby buildings and terrain can interfere with FM reception. Power lines or telephone wires can interfere with AM signals. And of course, radio signals have a limited range. The farther you are from a station, the weaker its signal will be. In addition, reception conditions change constantly as your vehicle moves.

Here are some common reception problems that probably do not indicate a problem with your radio:

FM

Fading and drifting stations—Generally, the effective range of FM is about 40 km (25 miles). Once outside this range, you may notice fading and drifting, which increase with the distance from the radio transmitter. They are often accompanied by distortion.

Multi–path—FM signals are reflective, making it possible for two signals to reach your antenna at the same time. If this happens, the signals will cancel each other out, causing a momentary flutter or loss of reception.

Static and fluttering—These occur when signals are blocked by buildings, trees, or other large objects. Increasing the bass level may reduce static and fluttering.

Station swapping—If the FM signal you are listening to is interrupted or weakened, and there is another strong station nearby on the FM band, your radio may tune in the second station until the original signal can be picked up again.

AM

Fading—AM broadcasts are reflected by the upper atmosphere—especially at night. These reflected signals can interfere with those received directly from the radio station, causing the radio station to sound alternately strong and weak.

Station interference—When a reflected signal and a signal received directly from a radio station are very nearly the same frequency, they can interfere with each other, making it difficult to hear the broadcast.

Static—AM is easily affected by external sources of electrical noise, such as high tension power lines, lightening, or electrical motors. This results in static.

CARING FOR YOUR CASSETTE PLAYER AND TAPES

For the best performance for your cassette player and tapes:

Clean the tape head and other parts regularly.

- A dirty tape head or tape path can decrease sound quality and tangle your cassette tapes. The easiest way to clean them is by using a cleaning tape. (A wet type is recommended.)

Use high–quality cassettes.

- Low–quality cassette tapes can cause many problems, including poor sound, inconsistent playing speed, and constant auto–reversing. They can also get stuck or tangled in the cassette player.
- Do not use a cassette if it has been damaged or tangled or if its label is peeling off.
- Do not leave a cassette in the player if you are not listening to it, especially if it is hot outside.
- Store cassettes in their cases and out of direct sunlight.
- Avoid using cassettes with a total playing time longer than 100 minutes (50 minutes per side). The tape used in these cassettes is thin and could get stuck or tangled in the cassette player.



CARING FOR YOUR COMPACT DISC PLAYER AND DISCS

- Use only compact discs labeled as shown.
- Extremely high temperatures can keep your compact disc player from working. On hot days, use the air conditioning to cool the vehicle interior before you listen to a disc.
- Bumpy roads or other vibrations may make your compact disc player skip.

- If moisture gets into your compact disc player, you may not hear any sound even though your compact disc player appears to be working. Remove the disc from the player and wait until it dries.

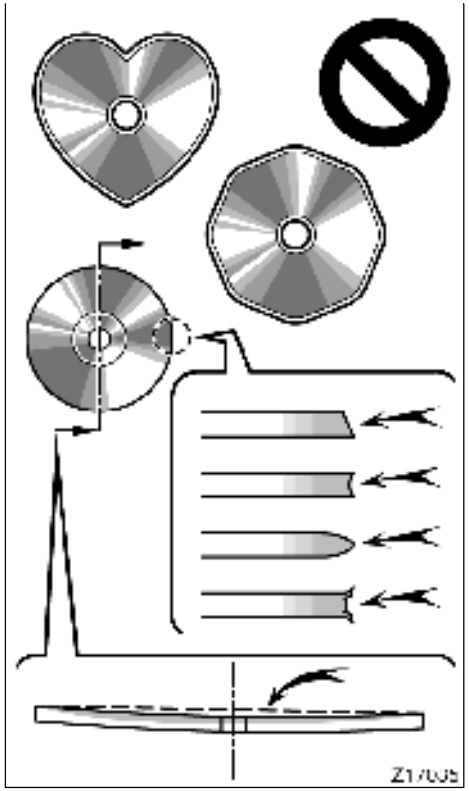

- Your automatic changer or compact disc player cannot play special shaped or low–quality compact discs such as those shown here. Do not use them as the changer or player could be damaged.
- Handle compact discs carefully, especially when you are inserting them. Hold them on the edge and do not bend them. Avoid getting fingerprints on them, particularly on the shiny side.
- Dirt, scrapes, warping, pin holes, or other disc damage could cause the player to skip or to repeat a section of a track. (To see a pin hole, hold the disc up to the light.)
- Remove discs from the compact disc player when you are not listening to them. Store them in their plastic cases away from moisture, heat, and direct sunlight.

To clean a compact disc: Wipe it with a soft, lint–free cloth that has been dampened with water. Wipe in a straight line from the center to the edge of the disc (not in circles). Dry it with another soft, lint–free cloth. Do not use a conventional record cleaner or anti–static device.

CAUTION

Compact disc players use invisible laser beam which could cause hazardous radiation exposure if directed outside the unit. Be sure to operate the player correctly as instructed.

SECTION 1–8

OPERATION OF INSTRUMENTS AND CONTROLS

Air conditioning system

Controls 140
Air flow selector settings 143
Operating tips 143
Side vents 145

Controls

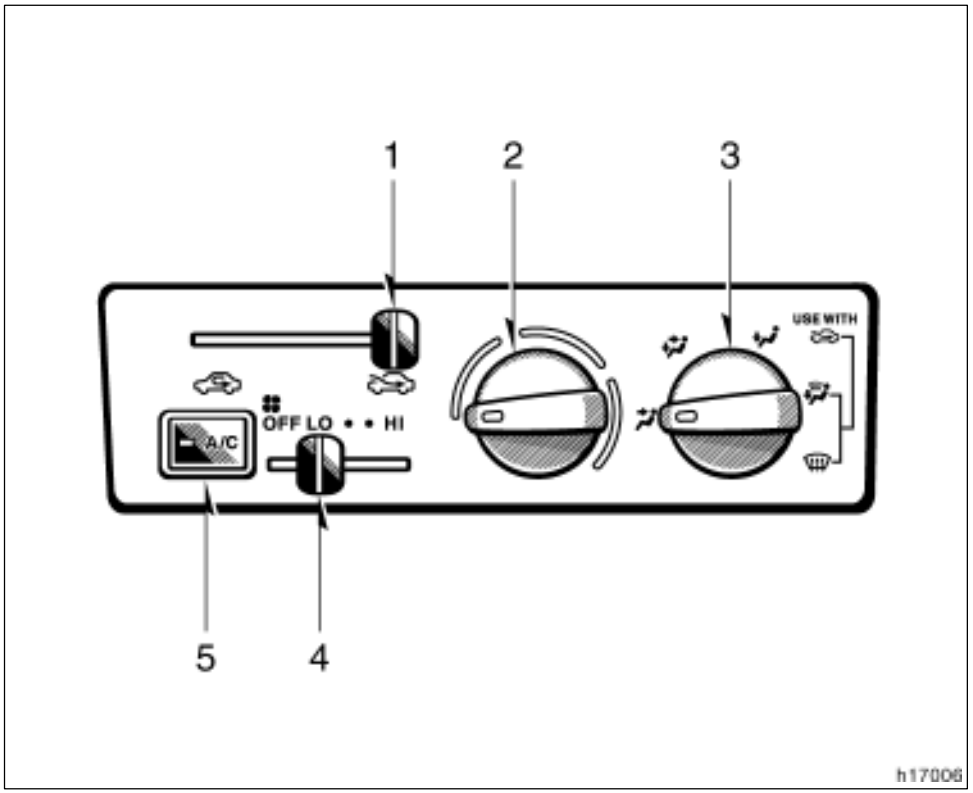

1. Air Intake Selector
2. Temperature Selector
3. Air Flow Selector
4. Fan Speed Selector
5. “A/C” Button (on some models)

Fan speed selector

Move the lever to adjust the fan speed—to the right to increase, to the left to decrease.

Temperature selector

Turn the knob to adjust the temperature—to the right to warm, to the left to cool.



Air flow selector

Turn the knob to select the vents used for air flow.

1. **Panel—**Air flows mainly from the instrument panel vents.
2. **Bi–level—**Air flows from both the floor vents and the instrument panel vents.
3. **Floor—**Air flows mainly from the floor vents.
4. **Floor/Windshield—**Air flows mainly from the floor vents and windshield vents.

   Use with the air intake selector positioned in Fresh.
5. **Windshield—**Air flows mainly from the windshield vents.

   Use with the air intake selector positioned in Fresh.

For details about air flow selector settings, see the illustration after “A/C” button.

Turning the Air Flow Selector to windshield position turns on the defroster to clear the front view more quickly.

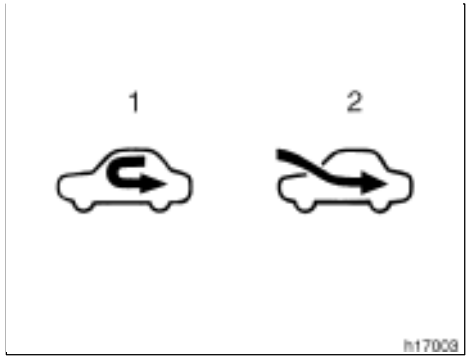

Air intake selector

Move the lever to select the air source.

1. **Recirculate—**Recirculates the air inside the vehicle.
2. **Fresh—**Draws outside air into the system.

“A/C” button

To turn on the air conditioning, press the “A/C” button. The “A/C” button indicator will come on. To turn the air conditioning off, press the button again.

If the “A/C” button indicator flashes, there is a problem in the air conditioning system and the air conditioning automatically shuts off. If this happens, take your vehicle to a Toyota dealer for service.

Air flow selector settings

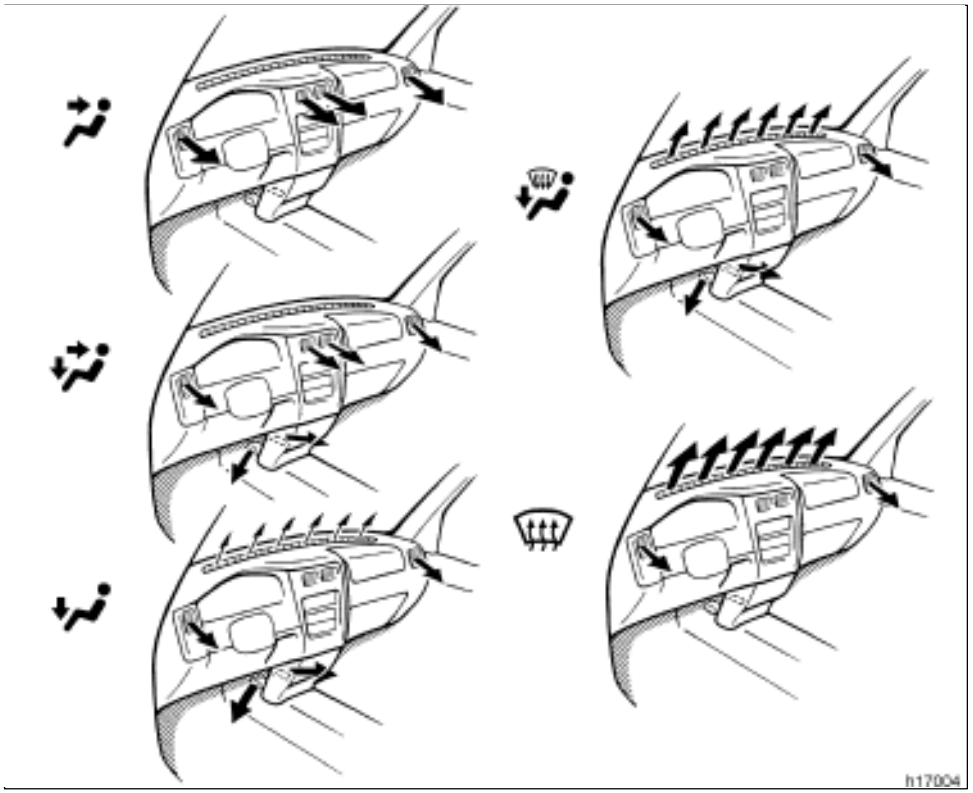

Operating tips

- To cool off your Toyota after it has been parked in the hot sun, drive with the windows open for a few minutes. This vents the hot air, allowing the air conditioning to cool the interior more quickly.
- Make sure the air intake grilles in front of the windshield are not blocked (by leaves or snow, for example).
- On humid days, do not blow cold air on the windshield. The windshield could fog up because of the difference in air temperature on the inside and outside of the windshield.
- Keep the area under the front seats clear to allow air to circulate throughout the vehicle.
- On cold days, move the fan speed to “HI” for a minute to help clear the intake ducts of snow or moisture. This can reduce the amount of fogging on the windows.
- When driving on dusty roads, close all windows. If dust thrown up by the vehicle is still drawn into the vehicle after closing the windows, it is recommended that the air intake selector be set to FRESH and the fan speed selector to any setting except “OFF”.

- If following another vehicle on a dusty road, or driving in windy and dusty conditions, it is recommended that the air intake selector be temporarily set to RECIRCULATE, which will close off the outside passage and prevent outside air and dust from entering the vehicle interior.

Heating

For best results, set controls to:

Fan speed—Any setting except “OFF”
Temperature—Towards **WARM** (red zone)
Air intake—FRESH (outside air)
Air flow—FLOOR
Air conditioning—OFF

- For quick heating, select recirculated air for a few minutes. To keep the windows from fogging, select fresh after the vehicle interior has been warmed.
- Press the “A/C” button on for dehumidified heating.
- Choose floor/windshield air flow to heat the vehicle interior while defrosting or defogging the windshield.

Air conditioning

For best results, set controls to:

Fan speed—Any setting except “OFF”
Temperature—Towards **COLD** (blue zone)
Air intake—FRESH (outside air)
Air flow—PANEL
Air conditioning—ON

- For quick cooling, move the air intake selector to recirculate for a few minutes.

Ventilation

For best results, set controls to:

Fan speed—Any setting except “OFF”
Temperature—Towards **COLD** (blue zone)
Air intake—FRESH (outside air)
Air flow—PANEL
Air conditioning—OFF

Defogging

The inside of the windshield

For best results, set controls to:

Fan speed—Any setting except “OFF”
Temperature—Towards **WARM** (red zone) to heat; **COLD** (blue zone) to cool
Air intake—FRESH (outside air)
Air flow—WINDSHIELD

Turning the Air Flow Selector to windshield position turns on the defroster to clear the front view more quickly.

Vehicles with “A/C” button—

Press the “A/C” button for dehumidified heating or cooling. This setting clears the front view more quickly.

- On humid days, do not blow cold air on the windshield—the difference between the outside and inside temperatures could make the fogging worse.

Defrosting

The outside of the windshield

For best results, set controls to:

Fan speed—Any setting except “OFF”
Temperature—Towards **WARM** (red zone)
Air intake—FRESH (outside air)
Air flow—WINDSHIELD

Turning the Air Flow Selector to windshield position turns on the defroster to clear the front view more quickly.

Vehicles with “A/C” button—

Press the “A/C” button for dehumidified heating or cooling. This setting clears the front view more quickly.

- To heat the vehicle interior while defrosting the windshield, choose floor/windshield air flow.

Side vents



If air flow control is not satisfactory, check the side vents. The side vents may be opened or closed as shown.

SECTION 1– 9

OPERATION OF INSTRUMENTS AND CONTROLS

Other equipment

Clock 148
Cigarette lighter and ashtray 148
Power outlets 149
Glove box 150
Cup holder 150
Floor mat 151

Clock



The digital clock indicates the time.

The key must be in the “ACC” or “ON” position.

To reset the hour: Push the “H” button.
To reset the minutes: Push the “M” button.

If quick adjustment to a full hour is desired, push the “:00” button.

For example, if the “:00” button is depressed when the time is between 1:01—1:29, the time will change to 1:00. If the time is between 1:30—1:59, the time will change to 2:00.

If the electrical power source has been disconnected from the clock, the time display will automatically be set to 1:00 (one o’clock).

When the instrument panel lights are turned on, the brightness of the time indication will be reduced.

Cigarette lighter and ashtray

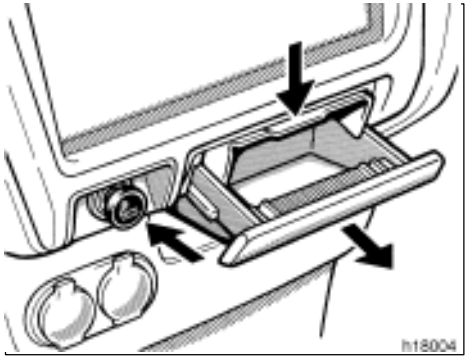

CIGARETTE LIGHTER

To use the cigarette lighter, press it in. When it becomes heated, it automatically pops out ready for use.

If the engine is not running, the key must be in the “ACC” position.

Do not hold the cigarette lighter pressed in.

Use a Toyota genuine cigarette lighter or equivalent for replacement.

ASHTRAY

To use the ashtray, pull it out.

When finished with your cigarette, thoroughly extinguish it in the ashtray to prevent other cigarette butts from catching fire. After using the ashtray, push it back in completely.

To remove the ashtray, press down on the lock spring plate and pull out.

CAUTION

To reduce the chance of injury in case of an accident or sudden stop while driving, always push the ashtray back in completely after using.

Power outlets

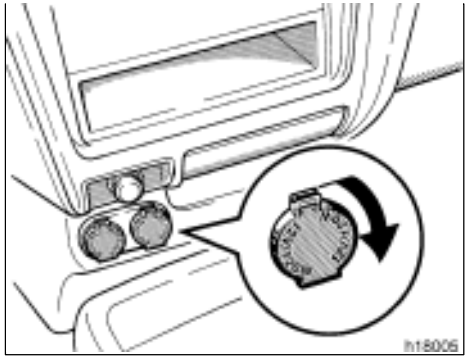

The power outlets are designed for power supply for car accessories.

The key must be in the "ACC" or "ON" position for the power outlets to be used.

NOTICE

- ***To prevent the fuse from being blown, do not use the electricity over the total vehicle capacity of 12V/120W.***
- ***To prevent the battery from being discharged, do not use the power outlets longer than necessary when the engine is not running.***
- ***Close the power outlet lids when the power outlets are not in use. Inserting a foreign object other than the appropriate plug that fits the outlet, or allowing any liquid into the outlet may cause electrical failure or short circuits.***

Glove box

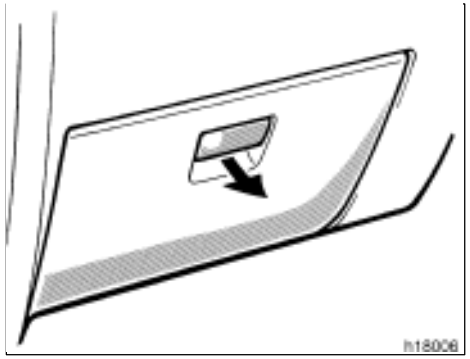

To open the glove box door, pull the lever.

On some models, the glove box light will come on when the glove box is open with the instrument panel lights on.

CAUTION

To reduce the chance of injury in case of an accident or a sudden stop, always keep the glove box door closed while driving.

Cup holder

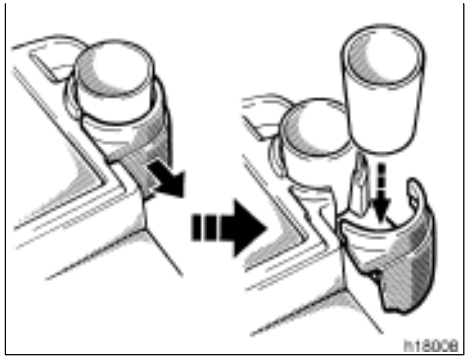

The cup holder is designed for holding cups or drink–cans securely in its holes.

To use the second cup holder, pull it out.

CAUTION

- **Xtra–cab models only: Do not use the second cup holder when you move passenger's seat for rear seat entry. The seat may interfere with second cup holder and the drink may spill over the occupants. If the spilled drink is hot, it may cause burns.**
- **Do not place anything else other than cups or drink–cans on the cup holder, as such items may be thrown about in the compartment and possibly injure people in the vehicle during sudden braking or in an accident.**
- **To reduce the chance of injury in case of an accident or sudden stop while driving, keep the second cup holder closed when it is not in use.**

NOTICE

Xtra–cab models only: Do not use the second cup holder when you move passenger's seat for rear seat entry. The seat may interfere with the second cup holder and the spilled drink may cause a malfunction on the electrical components.

Cup holder (Xtra–cab models)

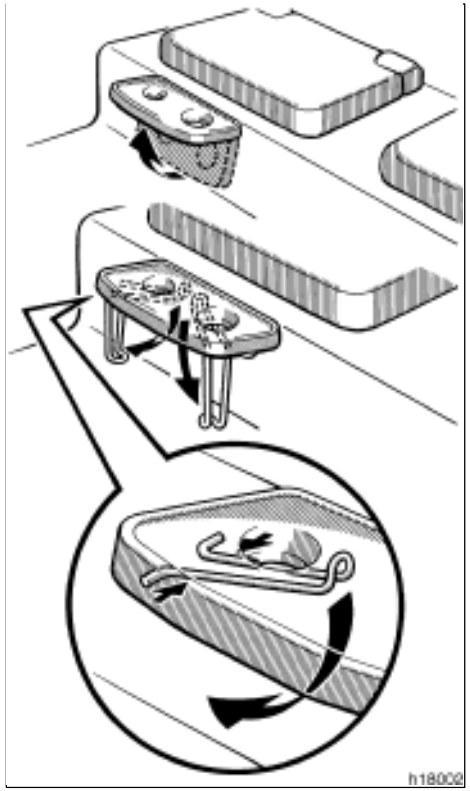

The cup holder is designed for holding cups fit securely in its holes.

To use the cup holder, raise the folding table under the right–rear seat. Stand the table by compressing and turning down the table legs.

CAUTION

- **Do not place anything else other than cups on the cup holder, as such item may be thrown about in the compartment and possibly injure people in the vehicle during sudden braking or an accident.**
- **To reduce the chance of injury in case of an accident or sudden stop while driving, keep the cup holder closed when it is not in use.**

Floor mat

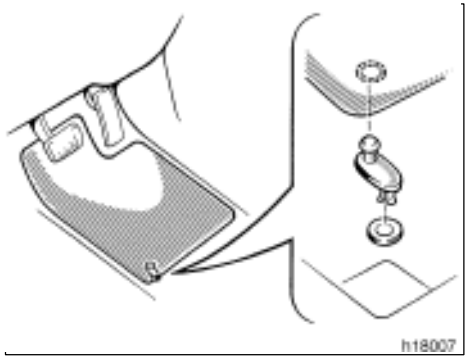

Use a floor mat of the correct size.

If the floor carpet and floor mat have a hole, then it is designed for use with a locking clip. Fix the floor mat with locking clip into the hole in the floor carpet.



CAUTION

Make sure the floor mat is properly placed on the floor carpet. If the floor mat slips and interferes with the movement of the pedals during driving, it may cause an accident.

SECTION 2

INFORMATION BEFORE DRIVING YOUR TOYOTA

Off–road vehicle precautions 154
Break–in period 155
Fuel 155
Operation in foreign countries 157
Three–way catalytic converter 157
Engine exhaust cautions 159
Facts about engine oil consumption 160
Twin ground electrode spark plugs 161
Brake system 161
Brake pad wear limit indicators 164
Luggage stowage precautions 164
Rear step bumper 165
Your Toyota’s identification 165
Suspension and chassis 166
Types of tires 167

Off–road vehicle precautions (4WD models and Pre Runner)

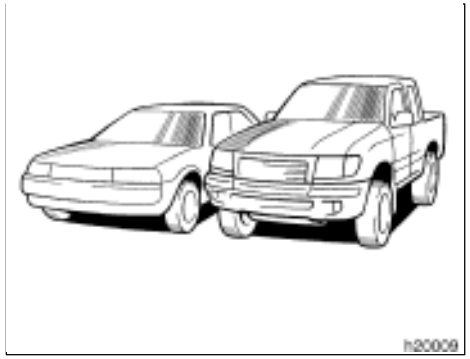

This vehicle has higher ground clearance and narrower tread in relation to the height of its center of gravity to make it capable of performing in a wide variety of off–road applications. Specific design characteristics give it a higher center of gravity than ordinary passenger cars. This vehicle design feature causes this type of vehicle to be more likely to rollover. And, it has a significantly higher rollover rate than other types of vehicles. An advantage of the higher ground clearance is a better view of the road allowing you to anticipate problems. It is not designed for cornering at the same speeds as ordinary passenger cars any more than low–slung sports cars designed to perform satisfactorily under off–road conditions. Therefore, sharp turns at excessive speeds may cause rollover.

CAUTION

Always observe the following precautions to minimize the risk of serious personal injury or damage to your vehicle:

- In a rollover crash, an unbelted person is significantly more likely to die than a person wearing a seat belt. Therefore, the driver and all passengers should fasten their seat belts whenever the vehicle is moving.
- Avoid sharp turns or abrupt maneuvers, if at all possible. Failure to operate this vehicle correctly may result in loss of control or vehicle rollover causing death or serious injury.
- Avoid loading any items on the roof that will raise the vehicle's center of gravity.
- Always slow down in gusty crosswinds. Because of its profile and higher center of gravity, your vehicle is more sensitive to side winds than an ordinary passenger car. Slowing down will allow you to have much better control.

- **When driving off–road or in rugged terrain, do not drive at excessive speeds, jump, make sharp turns, strike objects, etc. This may cause loss of control or vehicle rollover causing death or serious injury. You are also risking expensive damage to your vehicle’s suspension and chassis.**
- **Do not drive horizontally across steep slopes. Driving straight up or straight down is preferred. Your vehicle (or any similar off–road vehicle) can tip over sideways much more easily than forward or backward.**

Break–in period

Drive gently and avoid high speeds.

Your vehicle does not need an elaborate break–in. But following a few simple tips for the first 1600 km (1000 miles) can add to the future economy and long life of your vehicle:

- Do not drive over 88 km/h (55 mph).
- Run the engine at moderate speed between 2000 and 4000 rpm.
- Avoid full–throttle starts.
- Try to avoid hard stops during the first 300 km (200 miles).
- Do not drive slowly with the manual transmission in a high gear.
- Do not drive for a long time at any single speed, either fast or slow.
- Do not tow a trailer during the first 800 km (500 miles).

Four–wheel drive models with free–wheeling hubs only—

For the first 500 km (300 miles):

We recommend that you use high range, two–wheel drive, with both free–wheeling hubs engaged. For information on the four–wheel drive system and the front hubs, see “Four–wheel drive system” in Section 1–6.

Fuel

FUEL TYPE

Your new vehicle must use only unleaded gasoline.

To help prevent gas station mix–ups, your Toyota has a new smaller fuel tank opening. The special nozzle on pumps with unleaded fuel will fit it, but the larger standard nozzle on pumps with leaded gas will not.

At a minimum, the gasoline you use should meet specifications of ASTM D4814 in the U.S.A. and CGSB 3.5–M93 in Canada.

NOTICE

Do not use leaded gasoline. Use of leaded gasoline will cause the three–way catalytic converter to lose its effectiveness and the emission control system to function improperly. Also, this can increase maintenance costs.

OCTANE RATING

Select Octane Rating 87 (Research Octane Number 91) or higher.

Use of unleaded gasoline with an octane rating or research octane number lower than stated above will cause persistent heavy knocking. If it is severe, this will lead to engine damage.

If your engine knocks...

If you detect heavy knocking even when using the recommended fuel, or if you hear steady knocking while holding a steady speed on level roads, consult your Toyota dealer.

However, now and then, you may notice light knocking for a short time while accelerating or driving up hills. This is no need of concern.

GASOLINES CONTAINING DETERGENT ADDITIVES

Toyota recommends use of gasolines that contain detergent additives to avoid build–up of engine deposits.

For further details, ask your Toyota dealer or a local gasoline retailer.

IMPROVED GASOLINES

The American Automobile Manufacturers Association (AAMA) has developed a specification of improved gasolines. The AAMA specification offers optimal fuel information for better vehicle performance and better protection of your engine.

Toyota recommends the use of gasolines that meet the AAMA specification, if available, for improved driveability and emission control system.

GASOLINES CONTAINING MTBE

Gasolines that contain MTBE (Methyl Tertiary–Butyl Ether) are available in the market. If you use a gasoline mixed with MTBE, make certain that it does not contain more than 15% of MTBE.

GASOLINES CONTAINING MMT

Some gasolines contain an octane–enhancing additive called MMT (methylcyclopentadienyl manganese tricarbonyl).

Toyota does not recommend the use of gasolines that contain MMT. If fuels containing MMT are used, your emission control system may be adversely affected. The Malfunction Indicator Lamp on the instrument cluster may come on. If this happens, contact your Toyota dealer for service.

GASOLINES CONTAINING ALCOHOL

If you use gasohol in your Toyota, be sure that it is unleaded, has an octane rating no lower than 87 and does not contain more than 10% ethanol.

Gasohol is a mixture of gasoline and ethanol.

Toyota does not recommend the use of gasolines containing methanol. If you use gasoline containing methanol, use only gasoline meeting the requirements above and also containing less than 5% methanol with cosolvents and corrosion inhibitors for methanol.

GASOLINES QUALITY

In a very few cases, you may experience driveability problems caused by the particular gasoline that you are using. If you continue to have unacceptable driveability, try changing gasoline brands. If that does not rectify your problem, then consult your Toyota dealer.

NOTICE

- ***Do not use gasohol other than stated above. It will cause fuel system damage or vehicle performance problems.***
- ***If driveability problems occur (poor hot starting, vaporizing, engine knock, etc.), discontinue the use.***
- ***Take care not to spill gasohol during refueling. Gasohol may cause paint damage.***

FUEL TANK CAPACITY

Two–wheel drive models
except Pre Runner
57 L (15.1 gal., 12.5 Imp. gal.)

Four–wheel drive models
and Pre Runner
68 L (18.0 gal., 15.0 Imp. gal.)

Operation in foreign countries

If you plan to drive your Toyota in another country...

First, comply with the vehicle registration laws.

Second, confirm the availability of the correct fuel (unleaded and minimum octane number).

Three–way catalytic converter—

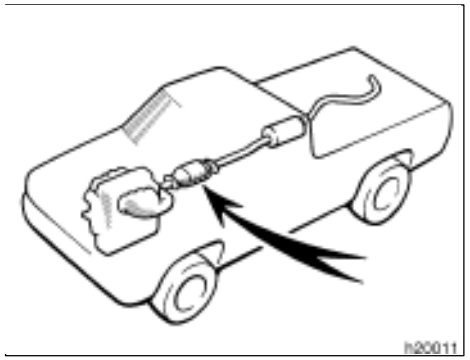

Except LEV*

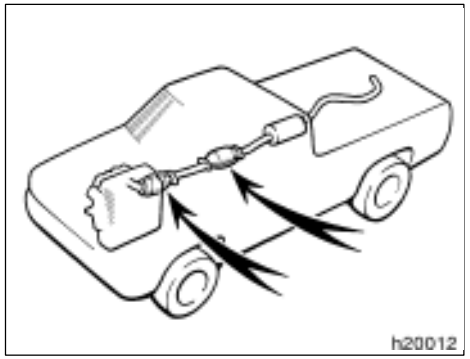

LEV*

The three–way catalytic converter is an emission control device installed in the exhaust system.

The purpose is to reduce pollutants in the exhaust gas.

*: See following "Exhaust emission label" for details.

CAUTION

- **Keep people and combustible materials away from the exhaust pipe while the engine is running. The exhaust gas is very hot.**
- **Do not drive, idle or park your vehicle over anything that might burn easily such as grass, leaves, paper or rags.**

NOTICE

A large amount of unburned gases flowing into the three–way catalytic converter may cause it to overheat and create a fire hazard. To prevent this and other damage, observe the following precautions:

- ***Use only unleaded gasoline.***
- ***Do not drive with an extremely low fuel level; running out of fuel could cause the engine to misfire, creating an excessive load on the three–way catalytic converter.***
- ***Do not allow the engine to run at idle speed for more than 20 minutes.***
- ***Avoid racing the engine.***
- ***Do not push–start or pull–start your vehicle.***
- ***Do not turn off the ignition while the vehicle is moving.***

- ***Keep your engine in good running order. Malfunctions in the engine electrical system, electronic ignition system/distributor ignition system or fuel systems could cause an extremely high three–way catalytic converter temperature.***
- ***If the engine becomes difficult to start or stalls frequently, take your vehicle in for a check–up as soon as possible. Remember, your Toyota dealer knows your vehicle and its three–way catalytic converter system best.***
- ***To ensure that the three–way catalytic converter and the entire emission control system operate properly, your vehicle must receive the periodic inspections required by the Toyota Maintenance Schedule. For scheduled maintenance information, refer to the separate "Scheduled Maintenance Guide" or "Owner's Manual Supplement".***

—Exhaust emission label



To distinguish your vehicle, refer to the exhaust emission label back of your engine hood. The letter printed on the label as shown means:

USA: LEV
FED & CANADA: Except LEV

Engine exhaust cautions

CAUTION

- **Avoid inhaling the engine exhaust. It contains carbon monoxide, which is a colorless and odorless gas. It can cause unconsciousness or even death.**
- **Make sure the exhaust system has no holes or loose connections. The system should be checked from time to time. If you hit something, or notice a change in the sound of the exhaust, have the system checked immediately.**
- **Do not run the engine in a garage or enclosed area except for the time needed to drive the vehicle in or out. The exhaust gases cannot escape, making this a particularly dangerous situation.**
- **Do not remain for a long time in a parked vehicle with the engine running. If it is unavoidable, however, do so only in an unconfined area and adjust the heating or cooling system to force outside air into the vehicle.**
- **To allow proper operation of your vehicle’s ventilation system, keep the inlet grilles in front of the windshield clear of snow, leaves, or other obstructions.**
- **If you smell exhaust fumes in the vehicle, drive with the windows open. Have the cause immediately located and corrected.**
- **Toyota does not recommend occupying the rear cargo area when it is fitted with a slide–in camper, camper shell or other type cover while the engine is running. This caution applies to both driving and stopped or parked situations with the engine running. Particular care should be taken to prevent exhaust gases from entering camper bodies, trailers or other enclosures on or around your vehicle. If exhaust fumes are detected, open all windows and thoroughly ventilate the area.**

Facts about engine oil consumption

FUNCTIONS OF ENGINE OIL

Engine oil has the primary functions of lubricating and cooling the inside of the engine, and plays a major role in maintaining the engine in proper working order.

ENGINE OIL CONSUMPTION

It is normal that an engine should consume some engine oil during normal engine operation. The causes of oil consumption in a normal engine are as follows.

- Oil is used to lubricate pistons, piston rings and cylinders. A thin film of oil is left on the cylinder wall when a piston moves downwards in the cylinder. High negative pressure generated when the vehicle is decelerating sucks some of this oil into the combustion chamber. This oil as well as some part of the oil film left on the cylinder wall is burned by the high temperature combustion gases during the combustion process.
- Oil is also used to lubricate the stems of the intake valves. Some of this oil is sucked into the combustion chamber together with the intake air and is burned along with the fuel. High temperature exhaust gases also burn the oil used to lubricate the exhaust valve stems.

The amount of engine oil consumed depends on the viscosity of the oil, the quality of the oil and the conditions the vehicle is driven under.

More oil is consumed by high–speed driving and frequent acceleration and deceleration.

A new engine consumes more oil, since its pistons, piston rings and cylinder walls have not become conditioned.

When judging the amount of oil consumption, note that the oil may become diluted and make it difficult to judge the true level accurately.

As an example, if a vehicle is used for repeated short trips, and consumes a normal amount of oil, the dipstick may not show any drop in the oil level at all, even after 1000 km (600 miles) or more. This is because the oil is gradually becoming diluted with fuel or moisture, making it appear that the oil level has not changed. The diluting ingredients evaporate out when the vehicle is then driven at high speeds, as on an expressway, making it appear that oil is excessively consumed after driving at high speeds.

IMPORTANCE OF ENGINE OIL LEVEL CHECK

One of the most important points in proper vehicle maintenance is to keep the engine oil at the optimum level so that oil function will not be impaired. Therefore, it is essential that the oil level be checked regularly. Toyota recommends that the oil level be checked every time you refuel the vehicle.

NOTICE
Failure to check the oil level regularly could lead to serious engine trouble due to insufficient oil.

For detailed information on oil level check, see “Checking the engine oil level” in Section 7–2.

Twin ground electrode spark plugs (5VZ–FE engine)

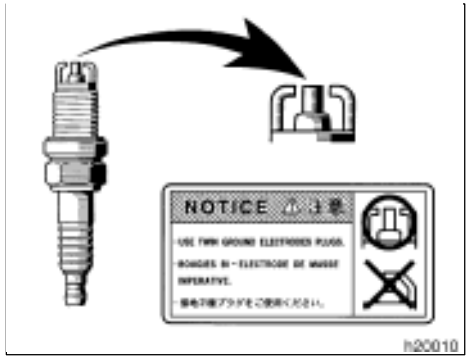

Your engine is fitted with twin ground electrode spark plugs.

NOTICE
Use only twin ground electrode spark plugs and do not adjust gaps for your engine performance.

Brake system

TANDEM MASTER CYLINDER BRAKE SYSTEM

The tandem master cylinder brake system is a hydraulic system with two separate sub–systems. If either sub–system should fail, the other will still work. However, the pedal will be harder to press, and your stopping distance will be longer. Also, the brake system warning light may come on.

CAUTION
Do not drive your vehicle with only a single brake system. Have your brakes fixed immediately.

BRAKE BOOSTER

The brake booster uses engine vacuum to power–assist the brakes. If the engine should quit while you are driving, you can bring the vehicle to a stop with normal pedal pressure. There is enough reserved vacuum for one or two stops—but no more!

CAUTION
● Do not pump the brake pedal if the engine stalls. Each push on the pedal uses up your reserved vacuum. **● Even if the power assist is completely lost, the brakes will still work. But you will have to push the pedal hard—much harder than normal. And your braking distance will be longer.**

ANTI–LOCK BRAKE SYSTEM (with “ABS” warning light)

The anti–lock brake system is designed to automatically help prevent lock–up of the wheels during sudden braking or braking on slippery road surfaces. This assists in providing directional stability and steering performance of the vehicle under these circumstances.

The anti–lock brake system becomes operative after the vehicle has accelerated to a speed in excess of approximately 10 km/h (6 mph). It stops operating when the vehicle decelerates to a speed below approximately 5 km/h (3 mph).

You may hear a sound in the engine compartment for a few seconds when the engine is started or just after the vehicle is started. This means that the anti–lock brake system is in the self check mode, and does not indicate a malfunction.

Effective way to press the “ABS” brake pedal: When the anti–lock brake system function is in action, you may feel the brake pedal pulsating and hear a noise. In this situation, to let the anti–lock brake system work for you, just hold the brake pedal down more firmly. Do not pump the brake in a panic stop. Pumping the brake pedal makes the stopping distance longer.

The brake pedal pulsation caused by the anti–lock brake system may indicate hazardous road surface conditions. Although the anti–lock brake system assists in providing vehicle control, it is still important to drive with all due care, because the anti–lock brake system cannot overcome the laws of physics that act on your vehicle:

- Braking capability is dependent on tire friction with the road surface.
- Even though the anti–lock brake system is operating, a driver cannot maintain full control on certain slippery road surfaces, when cornering at high speeds, or in violent maneuvers.
- Avoid high speeds on wet roads. The anti–lock brake system cannot eliminate the risk of hydroplaning and loss of tire friction.

Always maintain a safe distance from the vehicle in front of you. Compared with vehicles not fitted with an anti–lock brake system, your vehicle may require a longer stopping distance in the following cases:

- Driving on rough, gravel or snow–covered roads.
- Driving with tire chains installed.
- Driving on roads where the road surface is pitted or has other differences in surface height.

CAUTION

Do not use tires other than the manufacturer’s designated tires, and do not mix tires or wheels of different sizes. You may prevent the anti–lock brake system from operating at full effectiveness.

Vehicles with rear differential lock system—
The anti–lock brake system does not operate when the rear differential is locked. It is normal operation for the “ABS” warning light to be on at this time.



Type A

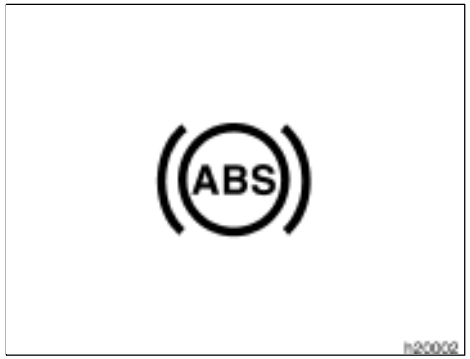

Type B

“ABS” warning light

This light comes on when the ignition key is turned to the “ON” position. After a few seconds, the light will go off.

If any of the following conditions occurs, this indicates a malfunction somewhere in the parts monitored by the warning light system. Contact your Toyota dealer as soon as possible to service the vehicle.

- The light does not come on as described above, or remains on.
- The light comes on while driving.

Vehicles with rear differential lock system—

- The light comes on while driving with the rear differential unlocked.
- The light does not comes on with the rear differential locked.
- The system comes into operation with the rear differential locked.

Even if the anti–lock brake system should fail, the brake system will still operate conventionally. However, when the “ABS” warning light is on (and the brake system warning light is off), the anti–lock brake system is not assisting brake performance so that the wheels can lock–up during sudden braking or braking on slippery road surfaces. Have your vehicle checked by your Toyota dealer as soon as possible.

Brake pad wear limit indicators

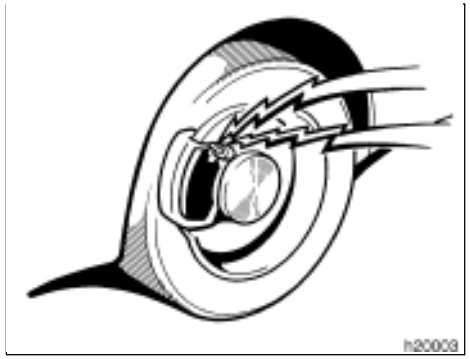

The brake pad wear limit indicators on your disc brakes give a warning noise when the brake pads are worn to where replacement is required.

If you hear a squealing or scraping noise while driving, have the brake pads checked and replaced by your Toyota dealer as soon as possible. Expensive rotor damage can result if the pads are not replaced when necessary.

Luggage stowage precautions

When stowing luggage or cargo in the vehicle, observe the following:

- Put luggage or cargo in the rear deck when at all possible. Be sure all items are secured in place.
- Be careful to keep the vehicle balanced. Locating the weight as far forward as possible helps maintain balance.
- For better fuel economy, do not carry unneeded weight.

CAUTION

- **To prevent luggage or packages from sliding forward during braking, do not stack anything behind the front seats higher than the seatbacks (Xtra–cab models). Keep luggage or packages low, as close to the floor as possible.**
- **Never allow anyone to ride in the rear deck. It is not designed for passengers. They should ride in their seats with their seat belts properly fastened. Otherwise, they are much more likely to suffer serious bodily injury, in the event of sudden braking or a collision.**
- **Do not drive with objects left on top of the instrument panel. They may interfere with the driver's field of view. Or they may move during sharp vehicle acceleration or turning, and impair the driver's control of the vehicle. In an accident they may injure the vehicle occupants.**

NOTICE

Do not load the vehicle beyond the cargo weight specified in Section 8.

Rear step bumper

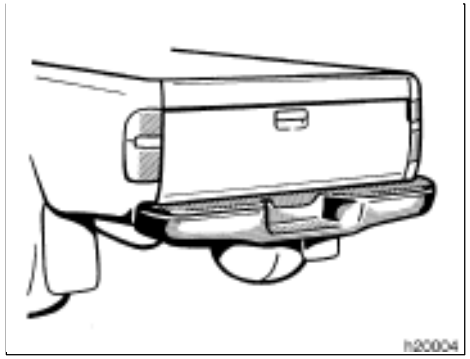

The rear step bumper is for rear end protection and easier step–up loading.

CAUTION

- **Do not allow more than one person to get on the rear step bumper at a time. It is designed for only one person.**
- **Never drive the vehicle with anyone on the rear step bumper.**

Your Toyota's identification——Vehicle identification number

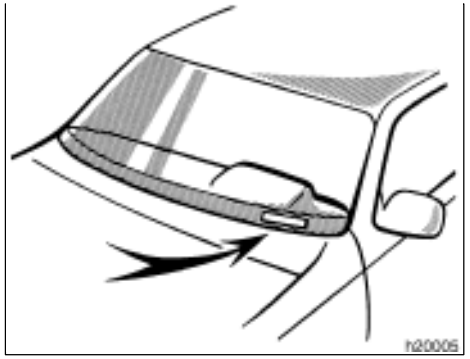

The vehicle identification number (VIN) is the legal identifier for your vehicle. This number is on the left top of the instrument panel, and can be seen through the windshield from outside.

This is the primary identification number for your Toyota. It is used in registering the ownership of your vehicle.

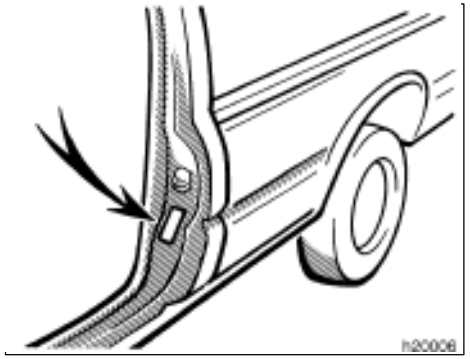

The vehicle identification number (VIN) is also on the Certification Label.

—Engine number

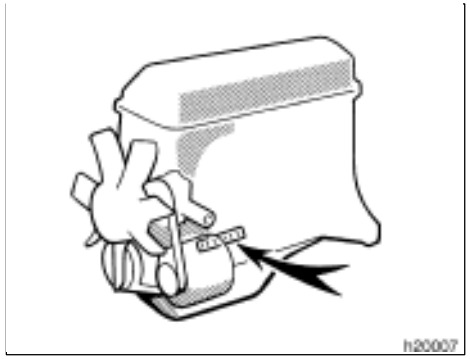

2RZ–FE and 3RZ–FE engines



5VZ–FE engine

The engine number is stamped on the engine block as shown.

Suspension and chassis

CAUTION

Do not modify the suspension/chassis with lift kits, spacers, springs, etc. It can cause dangerous handling characteristics, resulting in loss of control.

Types of tires

Determine sure what kind of tires your vehicle is originally equipped with.

1. Summer tires

Summer tires are high–speed capability tires best suited to highway driving under dry conditions.

Since summer tires do not have the same traction performance as snow tires, summer tires are inadequate for driving on snow–covered or icy roads. For driving on snow–covered or icy roads, we recommend using snow tires. If installing snow tires, be sure to replace all four tires.

2. All season tires

All season tires are designed to provide better traction in snow and to be adequate for driving in most winter conditions, as well as for use all year round.

All season tires, however, do not have adequate traction performance compared with snow tires in heavy or loose snow. Also, all season tires fall short in acceleration and handling performance compared with summer tires in highway driving.

CAUTION

- **Do not mix summer and all season tires on your vehicle as this can cause dangerous handling characteristics, resulting in loss of control.**
- **Do not use tires other than the manufacture’s designated tires, and never mix tires or wheels of the sizes different from the originals.**

New vehicle warranty

Your new vehicle is covered by the following Toyota limited warranties:

- New vehicle warranty
- Emission control systems warranty
- Others

For further information, please refer to the "Owner's Warranty Information Booklet" or "Owner's Manual Supplement".

Your responsibility for maintenance

It is the owner's responsibility to make sure that the specified maintenance is performed. Part 6 gives details of these maintenance requirements. Also included in Part 6 is general maintenance. For scheduled maintenance information, please refer to the separate "Scheduled Maintenance Guide" or "Owner's Manual Supplement".

Accessories, spare parts and modification of your Toyota

A wide variety of non–genuine spare parts and accessories for Toyota vehicles are currently available in the market. You should know that Toyota does not warrant these products and is not responsible for their performance, repair, or replacement, or for any damage they may cause to, or adverse effect they may have on, your Toyota vehicle.

This vehicle should not be modified with non–genuine Toyota products. Modification with non–genuine Toyota products could affect its performance, safety or durability, and may even violate governmental regulations. In addition, damage or performance problems resulting from the modification may not be covered under warranty.

Spark ignition system of your Toyota

The spark ignition system in your Toyota meets all requirements of the Canadian Interference–Causing Equipment Standard.

Installation of a mobile two–way radio system

As the installation of a mobile two–way radio system in your vehicle could affect electronic systems such as multiport fuel injection system/sequential multiport fuel injection system, cruise control system, anti–lock brake system, SRS airbag system and seat belt pretensioner system, be sure to check with your Toyota dealer for precautionary measures or special instructions regarding installation.

Scrapping of your Toyota

The SRS airbag and seat belt pretensioner devices in your Toyota contain explosive chemicals. If the vehicle is scrapped with the airbags and pretensioners left as they are, it may cause an accident such as fire. Be sure to have the systems of the SRS airbag and seat belt pretensioner removed and disposed of by a qualified service shop or by your Toyota dealer before you dispose of your vehicle.

On–pavement and off–road driving tips (4WD models and Pre Runner)

This vehicle will handle and maneuver differently from an ordinary passenger car because it is designed for off–road use also. It has a significantly higher rollover rate than other types of vehicles. In addition, this vehicle has a higher ground clearance and center of gravity than that of an ordinary passenger car. This vehicle design feature causes this type of vehicle to be more likely to rollover. Failure to operate this vehicle correctly may result in loss of control, accidents or vehicle rollover causing death or serious injury. Be sure to read “Off–road vehicle precautions” in Section 2 and “Off–road driving precautions” in Section 3.

Automatic Transmission Overdrive Switch (conventional type only)

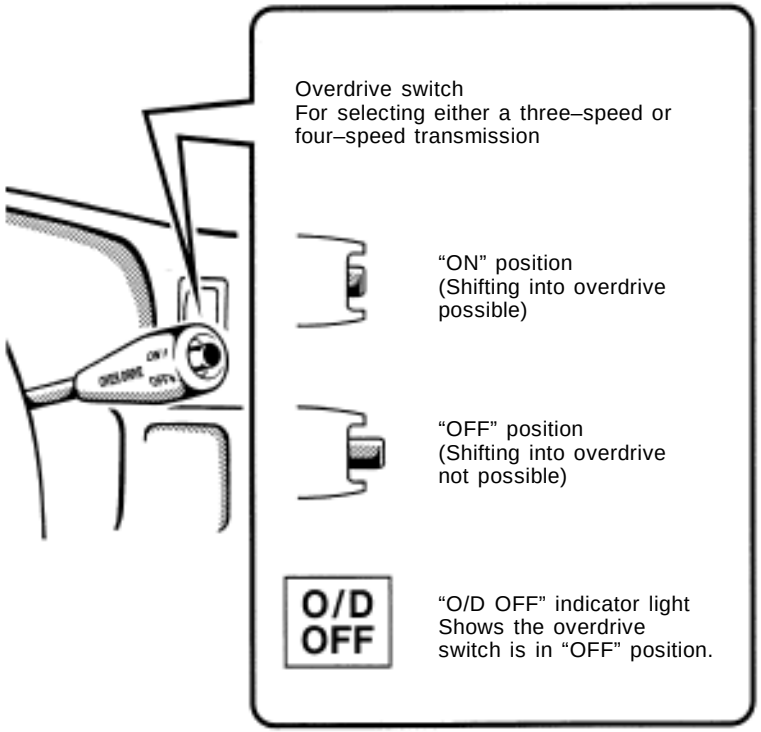

After starting your engine, always turn the overdrive switch on.

Even during ordinary driving, keep the overdrive switch turned on. (At this time, the “O/D OFF” indicatior light on the instrument cluster will be off.)

Always turn the overdrive switch on for better fuel economy and quieter driving.

For details, see “Automatic transmission” on page 85 and “How to save fuel and make your vehicle last longer, too” on page 181.

h00001

Important information about this manual

Safety and vehicle damage warnings

In this manual, you will see CAUTION and NOTICE warnings. These are used in the following ways:

⚠ CAUTION

This is a warning against something which may cause injury to people if the warning is ignored. You are informed what you must or must not do in order to avoid or reduce the risk to yourself and other people.

NOTICE

This is a warning against something which may cause damage to the vehicle or its equipment if the warning is ignored. You are informed what you must or must not do in order to avoid or reduce the risk of damage to your vehicle and its equipment.

Safety symbol

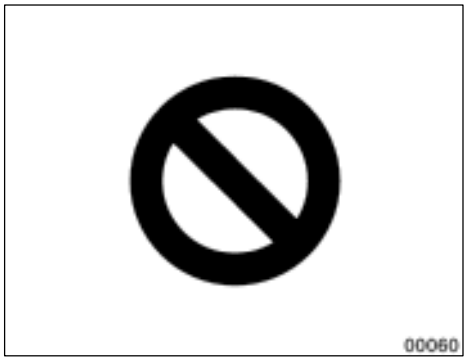

In this manual, you will also see a circle with a slash through it. This means “Do not”, “Do not do this”, or “Do not let this happen”.

SECTION 3

STARTING AND DRIVING

Before starting the engine 170
How to start the engine 170
Tips for driving in various conditions 171
Off–road driving precautions 172
Winter driving tips 174
Trailer towing 175
How to save fuel and make your vehicle last longer, too 181

Before starting the engine

1. Check the area around the vehicle before entering it.
2. Adjust seat position, seatback angle, seat cushion angle, head restraint height and steering wheel angle.
3. Adjust the inside and outside rear view mirrors.
4. Lock both doors.
5. Fasten seat belts.

How to start the engine— (a) Before cranking

1. Apply the parking brake firmly.
2. Turn off unnecessary lights and accessories.
3. **Manual transmission:** Press the clutch pedal to the floor and shift the transmission into neutral. Hold the clutch pedal to the floor until the engine is started. A starter safety device will prevent the starter from operating if the clutch pedal is not fully depressed.

   Automatic transmission: Put the selector lever in "P". If you need to restart the engine while the vehicle is moving, put the selector lever in "N". A starter safety device will prevent the starter from operating if the selector lever is in any drive position.
4. **Automatic transmission only:** Depress the brake pedal and hold it to the floor until driving off.

(b) Starting the engine

Before starting the engine, be sure to follow the instructions in "(a) Before cranking".

Normal starting procedure

The multiport fuel injection system/sequential multiport fuel injection system in your engine automatically controls the proper air–fuel mixture for starting. You can start a cold or hot engine as follows:

1. With your foot off the accelerator pedal, crank the engine by turning the key to "START". Release it when the engine starts.
2. After the engine runs for about 10 seconds, you are ready to drive.

If the weather is below freezing, let the engine warm up for a few minutes before driving.

If the engine stalls...

Simply restart it, using the correct procedure given in normal starting.

If the engine will not start...

See "If your vehicle will not start" in Section 4.

NOTICE

- ***Do not crank for more than 30 seconds at a time. This may overheat the starter and wiring systems.***
- ***Do not race a cold engine.***
- ***If the engine becomes difficult to start or stalls frequently, have the engine checked immediately.***

Tips for driving in various conditions

- Always slow down in gusty crosswinds. This will allow you much better control.
- Drive slowly onto curbs and, if possible, at a right angle. Avoid driving onto high, sharp–edged objects and other road hazards. Failure to do so can lead to severe tire damage resulting in tire bursts.
- When parking on a hill, turn the front wheels until they touch the curb so that the vehicle will not roll. Apply the parking brake, and place the transmission in “P” (automatic) or in first or reverse (manual). If necessary, block the wheels.
- Washing your vehicle or driving through deep water may get the brakes wet. To see whether they are wet, check that there is no traffic near you, and then press the pedal lightly. If you do not feel a normal braking force, the brakes are probably wet. To dry them, drive the vehicle cautiously while lightly pressing the brake pedal with the parking brake applied. If they still do not work safely, pull to the side of the road and call a Toyota dealer for assistance.
- Four–wheel drive models—Toyota recommends not using four–wheel drive on dry hard–surfaced roads, because four–wheel driving will cause unnecessary noise and wear, and poor fuel economy.
- Four–wheel drive models—In cold temperatures, noise may occur when driving in two–wheel drive before the transfer is warmed up. Therefore, first drive in four–wheel drive until the transfer is warmed up.

CAUTION

- **Before driving off, make sure that the parking brake is fully released and the parking brake reminder light is off.**
- **Do not leave your vehicle unattended while the engine is running.**
- **Do not rest your foot on the brake pedal while driving. It can cause dangerous overheating, needless wear, and poor fuel economy.**
- **Be careful when accelerating, upshifting, downshifting or braking on a slippery surface. Sudden acceleration or engine braking, could cause the vehicle to spin or skid.**
- **To drive down a long or steep hill, reduce your speed and downshift. Remember, if you ride the brakes excessively, they may overheat and not work properly.**
- **Do not continue normal driving when the brakes are wet. If they are wet, your vehicle will require a longer stopping distance, and it may pull to one side when the brakes are applied. Also, the parking brake will not hold the vehicle securely.**
- **Do not drive in excess of the speed limit. Even if the legal speed limit permits it, do not drive over 140 km/h (85 mph) unless your vehicle has high–speed capability tires. Driving over 140 km/h (85 mph) may result in tire failure, loss of control and possible injury. Be sure to consult a tire dealer to determine whether the tires on your vehicle are high–speed capability tires or not before driving at such speeds.**

Off–road driving precautions (4WD models and Pre Runner)

When driving your vehicle off–road, please observe the following precautions to ensure your driving enjoyment and to help prevent the closure of areas to off–road vehicles.

a. Drive your vehicle only in areas where off–road vehicles are permitted to travel.

b. Respect private property. Get owner’s permission before entering private property.

c. Do not enter areas that are closed. Honor gates, barriers and signs that restrict travel.

d. Stay on established roads. When conditions are wet, driving techniques should be changed or travel delayed to prevent damage to roads.

For owners in U.S. mainland, Hawaii and Puerto Rico:

To obtain additional information pertaining to driving your vehicle off–road, consult the following organizations.

- State and Local Parks and Recreation Departments
- State Motor Vehicle Bureau
- Recreational Vehicle Clubs

- U.S. Forest Service and Bureau of Land Management

⚠ CAUTION

Always observe the following precautions to minimize the risk of serious personal injury or damage to your vehicle:

- **Drive carefully when off the road. Do not take unnecessary risks by driving in dangerous places.**
- **Do not grip the steering wheel spokes when driving off–road. A bad bump could jerk the wheel and injure your hands. Keep both hands and especially your thumbs on the outside of the rim.**
- **Always check your brakes for effectiveness immediately after driving in sand, mud, water or snow.**
- **After driving through tall grass, mud, rock, sand, rivers, etc., check that there is no grass, bush, paper, rags, stone, sand, etc. adhering or trapped on the underbody. Clear off any such matter from the underbody. If the vehicle is used with these materials trapped or adhering to the underbody, a breakdown or fire could occur.**
- **In a rollover crash, an unbelted person is significantly more likely to die than a person wearing a seat belt. Therefore, the driver and all passengers should fasten their seat belts whenever the vehicle is moving.**
- **When driving off–road or in rugged terrain, do not drive at excessive speeds, jump, make sharp turns, strike objects, etc. This may cause loss of control or vehicle rollover causing death or serious injury. You are also risking expensive damage to your vehicle's suspension and chassis.**

NOTICE

- ***If driving through water, such as when crossing shallow streams, first check the depth of the water and the bottom of the river bed for firmness. Drive slowly and avoid deep water.***
- ***Take all necessary safety measures to ensure that water damage to the engine or other components does not occur.***

  Water entering the engine air intake will cause severe engine damage.

  Water can wash the grease from wheel bearings, causing rusting and premature failure, and may also enter the differentials, transmission and transfer case, reducing the gear oil's lubricating qualities.
- ***Sand and mud that has accumulated in brake drums and around brake discs may affect braking efficiency and may damage brake system components.***

◆ ***Always perform a maintenance inspection after each day of off–road driving that has taken you through rough terrain, sand, mud, or water. For scheduled maintenance information, refer to the “Scheduled Maintenance Guide” or “Owner’s Manual Supplement”.***

Winter driving tips

Make sure you have a proper freeze protection of engine coolant.

Your coolant must contain ethylene–glycol type coolant for a proper corrosion protection of aluminum components. Use “TOYOTA Long Life Coolant” or equivalent.

See Section 7–2 for details about coolant type selection.

NOTICE

Do not use alcohol type antifreeze or plain water alone.

When it is extremely cold, we recommend to use 60% solution for your Toyota, to provide protection down to about –50°C (–58°F). Do not use more than 70% solution for better coolant performance.

Check the condition of the battery and cables.

Cold temperatures reduce the capacity of any battery, so it must be in top shape to provide enough power for winter starting. Section 7–3 tells you how to visually inspect the battery. Your Toyota dealer and most service stations will be pleased to check the level of charge.

Make sure the engine oil viscosity is suitable for the cold weather.

See Section 7–2 for recommended viscosity. Leaving a heavy summer oil in your vehicle during winter months may cause harder starting. If you are not sure about which oil to use, call your Toyota dealer—he will be pleased to help.

Keep the door locks from freezing.

Squirt lock de–icer or glycerine into the locks to keep them from freezing. To open a frozen lock, try heating the key before inserting it.

Use a washer fluid containing an ant–freeze solution.

This product is available at your Toyota dealer and most auto parts stores. Follow the manufacturer’s directions for how much to mix with water.

NOTICE

Do not use engine antifreeze or any other substitute because it may damage your vehicle’s paint.

Do not use your parking brake when there is a possibility it could freeze.

When parking, put the transmission into “P” (automatic) or into first or reverse (manual) and block the front wheels. Do not use the parking brake, or snow or water accumulated in and around the parking brake mechanism may freeze, making it hard to release.

Keep ice and snow from accumulating under the fenders.

Ice and snow built up under your fenders can make steering difficult. During bad winter driving, stop and check under the fenders occasionally.

Depending on where you are driving, we recommend you carry some emergency equipment.

Some of the things you might put in the vehicle are tire chains, window scraper, bag of sand or salt, flares, small shovel, jumper cables, etc.

Trailer towing

Your vehicle is designed primarily as a passenger–and–load–carrying vehicle. Towing a trailer will have an adverse effect on handling, performance, braking, durability and driving economy (fuel consumption, etc.). Your safety and satisfaction depend on the proper use of correct equipment and cautious driving habits. For your safety and the safety of others, you must not overload your vehicle or trailer. Ask your local Toyota dealer for further details before towing.

WEIGHT LIMITS

Before towing, make sure the total trailer weight, gross combination weight, gross vehicle weight, gross axle weight and trailer tongue load are all within the limits.

The total trailer weight and tongue load can be measured with platform scales found at a highway weighing station, building supply company, trucking company, junk yard, etc.

CAUTION

- **The maximum gross trailer weight (trailer weight plus cargo weight) must never exceed the following.**

  2RZ–FE and 3RZ–FE engines
  1587 kg (3500 lb.)
  5VZ–FE engine
  2267 kg (5000 lb.)

  If towing a trailer and cargo weighing over 907 kg (2000 lb.), it is necessary to use a sway control device with sufficient capacity. The combination of the gross trailer weight added to the total weight of the vehicle, occupants and vehicle cargo must never exceed a total of the following.

Two–wheel drive models except Pre Runner

2RZ–FE engine
3038 kg (6700 lb.)

5VZ–FE engine
3764 kg (8300 lb.)

Four–wheel drive models and Pre Runner

3RZ–FE engine
3355 kg (7400 lb.)

5VZ–FE engine
4081 kg (9000 lb.)

Exceeding the maximum weight of the trailer, the vehicle, or the vehicle and trailer combination, can cause an accident resulting in serious personal injuries.

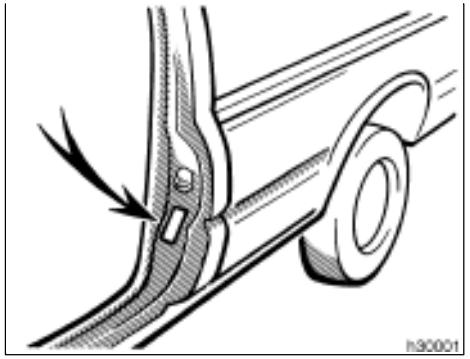

- **Trailer hitch assemblies have different weight capacities established by the hitch manufacturer. Even though the vehicle may be physically capable of towing a higher weight, the operator must determine the maximum weight rating of the particular hitch assembly and never exceed the maximum weight rating specified for the trailer–hitch. Exceeding the maximum weight rating set by the trailer hitch manufacturer can cause an accident resulting in serious personal injuries.**

- **The gross vehicle weight must not exceed the Gross Vehicle Weight Rating (GVWR) indicated on the Certification Label. The gross vehicle weight is the sum of weights of the unloaded vehicle, driver, passengers, luggage, hitch and trailer tongue load. It also includes the weight of any special equipment installed on your vehicle.**
- **The load on either the front or rear axle resulting from distribution of the gross vehicle weight on both axles must not exceed the Gross Axle Weight Rating (GAWR) listed on the Certification Label.**

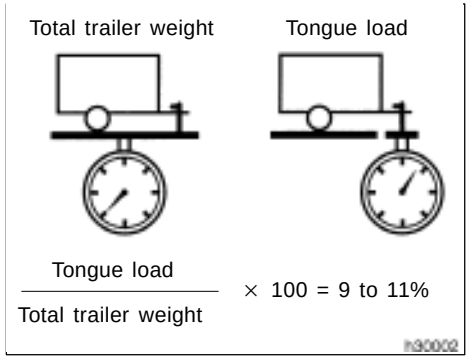

- **The trailer cargo load should be distributed so that the tongue load is 9 to 11% of the total trailer weight, not exceeding 158 kg (350 lb.).**

  However, if towing with a fifth wheel trailer, the cargo load must be distributed so that the tongue load is 19 to 21% of the total trailer weight. Never load the trailer with more weight in the back than in the front. About 60% of the trailer load should be in the front half of the trailer and the remaining 40% in the rear.

HITCHES

- Use only a weight carrying hitch designed for the total trailer weight. Toyota does not recommend using a weight distribution (load equalizing) hitch.
- The hitch must be bolted securely to the vehicle frame and installed according to the hitch manufacturer’s instructions.
- If using a fifth wheel hitch, the center of the king pin must be forward of the axis of the vehicle’s rear wheels, and installed according to the manufacturer’s instructions.
- The hitch ball and king pin should have a light coat of grease.
- Toyota recommends that the trailer hitch, except fifth wheel hitch, be removed when not towing to prevent injury and/or damage by the hitch in event of a rear end collision. After removing the hitch, the installation area should be sealed to prevent entry of exhaust fumes and mud.

NOTICE

Do not use an axle–mounting hitch as it may cause damage to the axle housing, wheel bearings, wheels and/or tires.

BRAKES AND SAFETY CHAINS

- Toyota recommends trailers with brakes that conform to any applicable federal and state/provincial regulations.
- A safety chain must always be used between the towing vehicle and the trailer. Leave sufficient slack in the chain for turns. The chain should cross under the trailer tongue to prevent the tongue from dropping to the ground in case it becomes damaged or separated. For correct safety chain procedures, follow the hitch or trailer manufacturer’s recommendations.

CAUTION

- **If the total trailer weight exceeds 453 kg (1000 lb.), trailer brakes are required.**
- **Never tap into your vehicle’s hydraulic system as it would lower its braking effectiveness.**
- **Never tow a trailer without using a safety chain securely attached to both the trailer and the vehicle. If damage occurs to the coupling unit or hitch ball, there is danger of the trailer wandering over into another lane.**

TIRES

- Ensure that your vehicle’s tires are properly inflated. See Section 7–2 for instructions.
- The trailer tires should be inflated to the pressure recommended by the trailer manufacturer in respect to the total trailer weight.

TRAILER LIGHTS

- Trailer lights must comply with federal, state/provincial and local regulations. See your local recreational vehicle dealer or rental agency for the correct type of wiring and relays for your trailer. Check for correct operation of the turn signals and stop lights each time you hitch up. Direct splicing may damage your vehicle’s electrical system and cause a malfunction of your lights.

BREAK–IN SCHEDULE

- Toyota recommends that you do not tow a trailer with a new vehicle or a vehicle with any new power train component (engine, transmission, differential, wheel bearing, etc.) for the first 800 km (500 miles) of driving.

MAINTENANCE

- If you tow a trailer, your vehicle will require more frequent maintenance due to the additional load. For this information, please refer to the scheduled maintenance information in the “Scheduled Maintenance Guide” or “Owner’s Manual Supplement”.
- Retighten all fixing bolts of the towing ball and bracket after approximately 1000 km (600 miles) of trailer driving.

PRE–TOWING SAFETY CHECK

- Check that your vehicle remains level when a loaded or unloaded trailer is hitched. Do not drive if the vehicle has an abnormal nose–up or nose–down condition, and check for improper tongue load, overload, worn suspension or other possible causes.
- Make sure the trailer cargo is securely loaded so that it cannot shift.
- Check that your rear view mirrors conform to any applicable federal, state/provincial or local regulation. If not, install the rear view mirrors required for towing purpose.

TRAILER TOWING TIPS

When towing a trailer, your vehicle will handle differently than when not towing. The three main causes of vehicle–trailer accidents are driver error, excessive speed and improper trailer loading. Keep these in mind when towing:

- Before starting out, check operation of the lights and all vehicle–trailer connections. After driving a short distance, stop and recheck the lights and connections. Before actually towing a trailer, practice turning, stopping and backing with a trailer in an area away from traffic until you learn the feel.
- Backing with a trailer is difficult and requires practice. Grip the bottom of the steering wheel and move your hand to the left to move the trailer to the left. Move your hand to the right to move the trailer to the right. (This procedure is generally opposite to that when backing without a trailer). Also, just turn the steering wheel a little at a time, avoiding sharp or prolonged turning. Have someone guide you when backing to reduce the risk of an accident.
- Because stopping distance may be increased, vehicle–to–vehicle distance should be increased when towing a trailer. For each 16 km/h (10 mph) of speed, allow at least one vehicle and trailer length between you and the vehicle ahead. Avoid sudden braking as you may skid, resulting in jackknifing and loss of control. This is especially true on wet or slippery surfaces.
- Avoid jerky starts or sudden acceleration. If your vehicle has a manual transmission, prevent excessive clutch slippage by keeping engine rpm low and not racing the engine. Always start out in first gear.
- Avoid jerky steering and sharp turns. The trailer could hit your vehicle in a tight turn. Slow down before making a turn to avoid the necessity of sudden braking.
- Remember that when making a turn, the trailer wheels will be closer than the vehicle wheels to the inside of the turn. Therefore, compensate for this by making a larger than normal turning radius with your vehicle.
- Crosswinds and rough roads will adversely affect handling of your vehicle and trailer, causing sway. Pay attention to the rear from time to time to prepare yourself for being passed by large trucks or buses, which may cause your vehicle and trailer to sway. If swaying happens, firmly grip the steering wheel and reduce speed immediately but gradually. Never increase speed. Steer straight ahead. If you make no extreme correction with the steering or brakes, the vehicle and trailer will stabilize.

- Be careful when passing other vehicles. Passing requires considerable distance. After passing a vehicle, do not forget the length of your trailer and be sure you have plenty of room before changing lanes.
- In order to maintain engine braking efficiency, do not use fifth gear (manual transmission) or overdrive (automatic transmission).
- Because of the added load of the trailer, your vehicle’s engine may overheat on hot days (at temperatures over 30°C [85°F]) when going up a long or steep grade with a trailer. If the engine coolant temperature gauge indicates overheating, immediately turn off the air conditioning (if in use), pull off the road and stop in a safe spot. Refer to “If your vehicle overheats” in Section 4 of this manual.
- Always place wheel blocks under both the vehicle and trailer wheels when parking. Apply the parking brake firmly. Put the transmission in “P” (automatic) or in first or reverse (manual). Avoid parking on a slope with a trailer, but if it cannot be avoided, do so only after performing the following:

1. Apply the brakes and hold.
2. Have someone place wheel blocks under both the vehicle and trailer wheels.
3. When the wheel blocks are in place, release your brakes slowly until the blocks absorb the load.
4. Apply the parking brake firmly.
5. Shift into first or reverse (manual) or “P” (automatic) and turn off the engine.

When restarting out after parking on a slope:

1. With the transmission in “P” position (automatic) or the clutch pedal depressed (manual), start the engine. (With an automatic transmission, be sure to keep the brake pedal depressed.)
2. Shift into gear.
3. Release the parking brake (also foot brake on automatic transmission vehicles) and slowly pull or back away from the wheel blocks. Stop and apply your brakes.
4. Have someone retrieve the blocks.

CAUTION

- **Do not exceed 72 km/h (45 mph) or the posted towing speed limit, whichever is lower. Because instability (swaying) of a towing vehicle–trailer combination usually increases as the speed increases, exceeding 72 km/h (45 mph) may cause loss of control.**
- **Slow down and downshift before descending steep or long downhill grades. Do not make sudden downshifts.**
- **Avoid holding the brake pedal down too long or too frequently. This could cause the brakes to overheat and result in reduced braking efficiency.**

How to save fuel and make your vehicle last longer, too

Getting more kilometers/mileage from a liter/gallon of fuel is easy—just take it easy. It will help make your vehicle last longer, too. Here are some specific tips on how to save money on both fuel and repairs:

- **Keep your tires inflated at the correct pressure.** Underinflation causes tire wear and wastes fuel. See Section 7–2 for instructions.
- **Do not carry unneeded weight in your vehicle.** Excess weight puts a heavier load on the engine, causing greater fuel consumption.
- **Avoid lengthy warm–up idling.** Once the engine is running smoothly, begin driving—but gently. Remember, however, that on cold winter days this may take a little longer.
- **Always keep the automatic transmission overdrive switch turned on.** Driving with the overdrive switch off will reduce the fuel economy. (For details, see “Automatic transmission” in Section 1–6.)
- **Accelerate slowly and smoothly.** Avoid jackrabbit starts. Get into high gear as quickly as possible.
- **Avoid long engine idling.** If you have a long wait and you are not in traffic, it is better to turn off the engine and start again later.
- **Avoid engine lug or overrevving.** Use a gear position suitable for the road on which you are travelling.
- **Avoid continuous speeding up and slowing down.** Stop–and–go driving wastes fuel.
- **Avoid unnecessary stopping and braking.** Maintain a steady pace. Try to time the traffic signals so you only need to stop as little as possible or take advantage of through streets to avoid traffic lights. Keep a proper distance from other vehicles to avoid sudden braking. This will also reduce wear on your brakes.
- **Avoid heavy traffic or traffic jams whenever possible.**
- **Do not rest your foot on the clutch or brake pedal.** This causes premature wear, overheating and poor fuel economy.
- **Maintain a moderate speed on highways.** The faster you drive, the greater the fuel consumption. By reducing your speed, you will cut down on fuel consumption.

- **Keep the front wheels in proper alignment.** Avoid hitting the curb and slow down on rough roads. Improper alignment not only causes faster tire wear but also puts an extra load on the engine, which, in turn, wastes fuel.
- **Keep the bottom of your vehicle free from mud, etc.** This not only lessens weight but also helps prevent corrosion
- **Keep your vehicle tuned–up and in top shape.** A dirty air cleaner, improper valve clearance, dirty plugs, dirty oil and grease,brakes not adjusted, etc. all lower engine performance and contribute to poor fuel economy. For longer life of all parts and lower operating costs, keep all maintenance work on schedule, and if you often drive under severe conditions, see that your vehicle receives more frequent maintenance. (For scheduled maintenance information, please refer to the separate “Scheduled Maintenance Guide” or “Owner’s Manual Supplement”).

CAUTION

Never turn off the engine to coast down hills. Your power steering and brake booster will not function without the engine running. Also, the emission control system operates properly only when the engine is running.

SECTION 4

IN CASE OF AN EMERGENCY

If your vehicle will not start 184
If your engine stalls while driving 187
If your vehicle overheats 187
If you have a flat tire 188
If your vehicle needs to be towed 198
If you cannot shift automatic transmission selector lever 203
If you lose your keys 205

If your vehicle will not start—
(a) Simple checks

Before making these checks, make sure you have followed the correct starting procedure given in "How to start the engine" in Section 3 and that you have sufficient fuel.

If the engine is not turning over or is turning over too slowly—

1. Check that the battery terminals are tight and clean.
2. If the battery terminals are O.K., switch on the interior light.
3. If the light is out, dim or goes out when the starter is cranked, the battery is discharged. You may try jump starting. See "(c) Jump starting" for further instructions.

If the light is O.K., but the engine still will not start, it needs adjustment or repair. Call a Toyota dealer or qualified repair shop.

NOTICE
Do not pull– or push–start the vehicle. It may damage the vehicle or cause a collision when the engine starts. Also the three–way catalytic converter may overheat and become a fire hazard.

If the engine turns over at its normal speed but will not start—

1. Check that all the push–on connectors are tight. (For example, connectors at the spark plugs, ignition coil and/or distributor)
2. If the connectors are O.K., the engine may be flooded because of repeated cranking. See "(b) Starting a flooded engine" for further instructions.

(b) Starting a flooded engine

If the engine will not start, your engine may be flooded because of repeated cranking.

If this happens, turn the key to "START" with the accelerator pedal held down. Keep the key and accelerator pedal so for 15 seconds and release them. Then try starting the engine with your foot off the accelerator pedal.

If the engine does not start after 15 seconds of cranking, release the key, wait a few minutes and try again.

If the engine still will not start, it needs adjustment or repair. Call a Toyota dealer or qualified repair shop for assistance.

NOTICE
Do not crank for more than 30 seconds at a time. This may overheat the starter and wiring systems.

(c) Jump starting

To avoid serious personal injury and damage to your vehicle which might result from battery explosion, acid burns, electrical burns, or damaged electronic components, these instructions must be followed precisely.

If you are unsure about how to follow this procedure, we strongly recommend that you seek the help of a competent mechanic or towing service.

⚠ CAUTION

- **Batteries contain sulfuric acid which is poisonous and corrosive. Wear protective safety glasses when jump starting, and avoid spilling acid on your skin, clothing, or vehicle.**
- **If you should accidentally get acid on yourself or in your eyes, remove any contaminated clothing and flush the affected area with water immediately. Then get immediate medical attention. If possible, continue to apply water with a sponge or cloth while en route to the medical office.**
- **The gas normally produced by a battery will explode if a flame or spark is brought near. Use only standardized jumper cables and do not smoke or light a match while jump starting.**

NOTICE

The battery used for boosting must be 12 V. Do not jump start unless you are sure that the booster battery is correct.

JUMP STARTING PROCEDURE

1. If the booster battery is installed in another vehicle, make sure the vehicles are not touching. Turn off all unnecessary lights and accessories.
2. If required, remove all the vent plugs from the booster and discharged batteries. Lay a cloth over the open vents on the batteries. (This helps reduce the explosion hazard, personal injuries and burns.)
3. If the engine in the vehicle with the booster battery is not running, start it and let it run for a few minutes. During jump starting, run the engine at about 2000 rpm with the accelerator pedal lightly depressed.

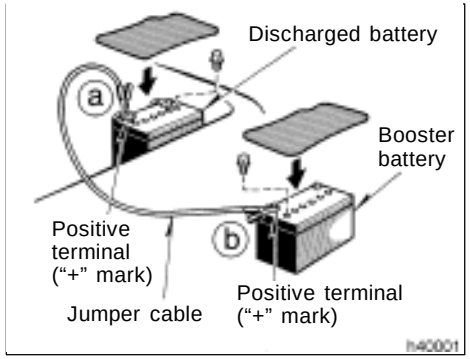

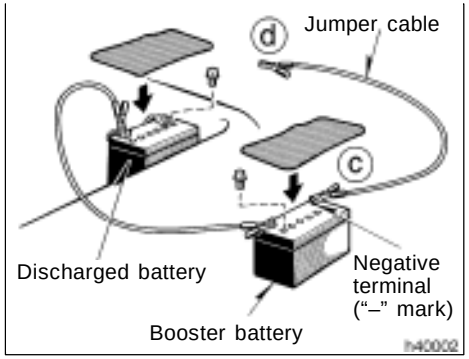

4. Make the cable connections in the order a, b, c, d.

   a. Connect the clamp of the positive (red) jumper cable to the positive (+) terminal on the discharged battery.

   b. Connect the clamp at the other end of the positive (red) jumper cable to the positive (+) terminal on the booster battery.

   c. Connect the clamp of the negative (black) jumper cable to the negative (–) terminal on the booster battery.

   d. Connect the clamp at the other end of the negative (black) jumper cable to a solid, stationary, unpainted, metallic point of the vehicle with the discharged battery.

   The recommended connecting points are shown in the following illustrations:

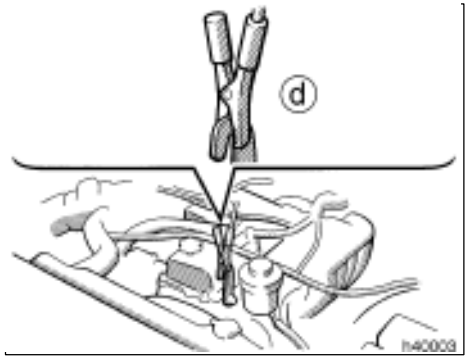

Connecting point for 2RZ–FE and 3RZ–FE engines

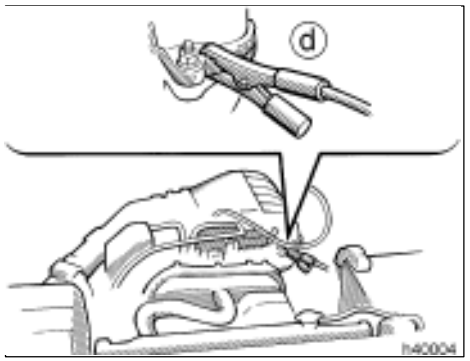

Connecting point for 5VZ–FE engine

Do not connect the cable to or near any part that moves when the engine is cranked.

CAUTION

When making the connections, to avoid serious injury, do not lean over the battery or accidentally let the jumper cables or clamps touch anything except the correct battery terminals or the ground.

5. Start your engine in the normal way. After starting, run it at about 2000 rpm for several minutes with the accelerator pedal lightly depressed.
6. Carefully disconnect the cables in the exact reverse order: the negative cable and then the positive cable.
7. Carefully dispose of the battery cover cloths—they may now contain sulfuric acid.
8. If removed, replace all the battery vent plugs.

If the cause of your battery discharging is not apparent (for example, lights left on), you should have it checked.

If your engine stalls while driving

If your engine stalls while driving...

1. Reduce your speed gradually, keeping a straight line. Move cautiously off the road to a safe place.
2. Turn on your emergency flashers.
3. Try starting the engine again.

If the engine will not start, see "If your vehicle will not start".

CAUTION

If the engine is not running, the power assist for the brakes and steering will not work so steering and braking will be much harder than usual.

If your vehicle overheats

If your engine coolant temperature gauge indicates overheating, if you experience a loss of power, or if you hear a loud knocking or pinging noise, the engine has probably overheated. You should follow this procedure...

1. Pull safely off the road, stop the vehicle and turn on your emergency flashers. Put the transmission in "P" (automatic) or neutral (manual) and apply the parking brake. Turn off the air conditioning if it is being used.
2. If coolant or steam is boiling out of the radiator or reservoir, stop the engine. Wait until the steam subsides before opening the hood. If there is no coolant boiling over or steam, leave the engine running.

CAUTION

To help avoid personal injury, keep the hood closed until there is no steam. Escaping steam or coolant is a sign of very high pressure.

3. Visually check to see if the engine drive belt (fan belt) is broken or loose. Look for obvious coolant leaks from the radiator, hoses, and under the vehicle. However, note that water draining from the air conditioning is normal if it has been used.

CAUTION

When the engine is running, keep hands and clothing away from the moving fan and engine drive belts.

4. If the engine drive belt is broken or the coolant is leaking, stop the engine immediately. Call a Toyota dealer for assistance.
5. If the engine drive belt is O.K. and there are no obvious leaks, you may help the engine cool down more quickly by running it at about 1500 rpm for a few minutes with the accelerator pedal lightly depressed.
6. Check the coolant reservoir. If it is dry, add coolant to the reservoir while the engine is running. Fill it about half full.

CAUTION

Do not attempt to remove the radiator cap when the engine and radiator are hot. Serious injury could result from scalding hot fluid and steam blown out under pressure.

7. After the engine coolant temperature has cooled to normal, again check the coolant level in the reservoir. If necessary, bring it up to half full again. Serious coolant loss indicates a leak in the system. You should have it checked as soon as possible at your Toyota dealer.

If you have a flat tire—

1. Reduce your speed gradually, keeping a straight line. Move cautiously off the road to a safe place well away from the traffic. Avoid stopping on the center divider of a highway. Park on a level spot with firm ground.
2. Stop the engine and turn on your emergency flashers.
3. Firmly set the parking brake and put the transmission in "P" (automatic) or reverse (manual).
4. Have everyone get out of the vehicle on the side away from traffic.
5. Read the following instructions thoroughly.

CAUTION

When jacking, be sure to observe the following to reduce the possibility of personal injury:

- **Follow jacking instructions.**
- **Do not put any part of your body under the vehicle supported by the jack. Personal injury may occur.**
- **Do not start or run the engine while your vehicle is supported by the jack.**

- **Stop the vehicle on a level firm ground, firmly set the parking brake and put the transmission in "P" (automatic) or reverse (manual). Block the wheel diagonally opposite to the one being changed if necessary.**
- **Make sure to set the jack properly in the jack point. Raising the vehicle with jack improperly positioned will damage the vehicle or may allow the vehicle to fall off the jack and cause personal injury.**
- **Never get under the vehicle when the vehicle is supported by the jack alone.**
- **Use the jack only for lifting your vehicle during wheel changing.**
- **Do not raise the vehicle with someone in the vehicle.**
- **When raising the vehicle, do not put an object on or under the jack.**
- **Raise the vehicle only high enough to remove and change the tire.**

NOTICE

Do not continue driving with a deflated tire. Driving even a short distance can damage a tire beyond repair.

—Required tools and spare tire (normal cab models)

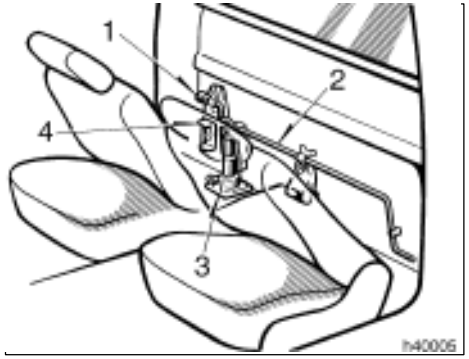

1. Get the required tools and spare tire.

1 Wheel nut wrench
2 Jack handle
3 Jack
4 Wheel ornament replacer (with free–wheeling hubs)

To prepare yourself for an emergency, you should familiarize yourself with the use of the jack, each of the tools and their storage locations.

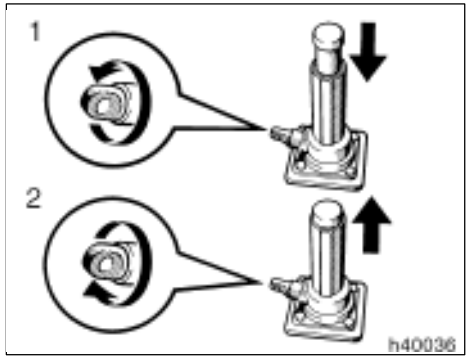

Turn the jack joint by hand.

To remove: Turn the joint in direction 1 until the jack is free.
To store: Turn the joint in direction 2 until the jack is firmly secured to prevent it flying forward during a collision or sudden braking.

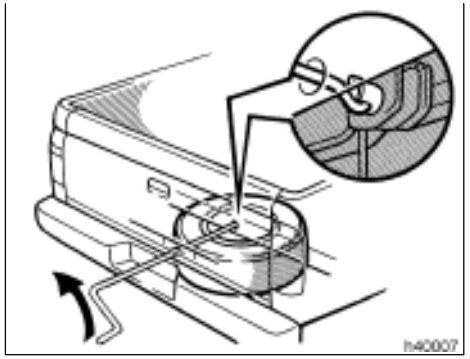

To remove the spare tire:

1. Insert the end of the jack handle into the lowering screw and turn it counterclockwise.
2. After the tire is lowered completely to the ground, remove the holding bracket.

When storing the spare tire, put it in place with the outer side of the wheel facing up. Then secure the tire, taking care that the tire goes straight up without catching on any other part, to prevent it from flying forward during a collision or sudden braking.

—Required tools and spare tire (Xtra–cab models)



1. Get the required tools and spare tire.

1 Tool bag
2 Jack

To prepare yourself for an emergency, you should familiarize yourself with the use of the jack, each of the tools and their storage locations.

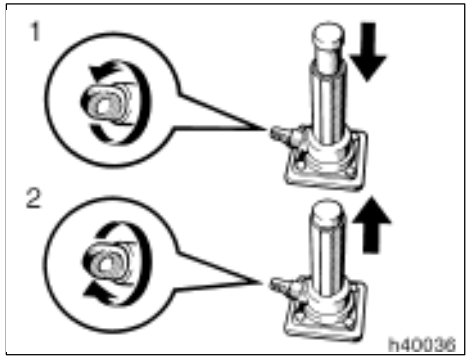

Turn the jack joint by hand.

To remove: Turn the joint in direction 1 until the jack is free.
To store: Turn the joint in direction 2 until the jack is firmly secured to prevent it flying forward during a collision or sudden braking.

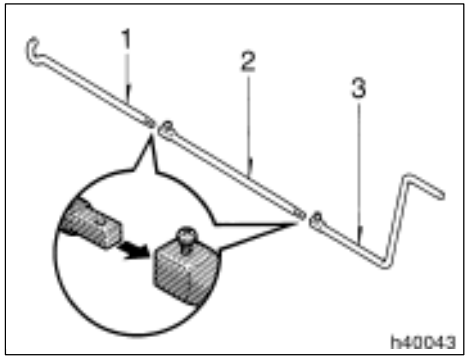

To remove the spare tire:

1. Put a jack handle, jack handle extension and jack handle end together as shown in the illustration.

   1 Jack handle end
   2 Jack handle extension
   3 Jack handle

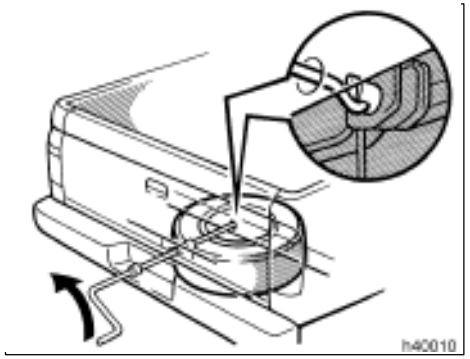

2. Insert the end of the jack handle extension into the lowering screw and turn it counterclockwise with the handle, making sure the handle remains firmly fitted onto the jack handle extension.
3. After the tire is lowered completely to the ground, remove the holding bracket.

When storing the spare tire, put it in place with the outer side of the wheel facing up. Then secure the tire, taking care that the tire goes straight up without catching on any other part, to prevent it from flying forward during a collision or sudden braking.

—Blocking the wheel

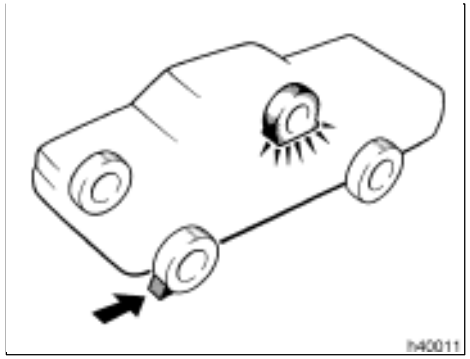

2. Block the wheel diagonally opposite the flat tire to keep the vehicle from rolling when it is jacked up.

When blocking the wheel, place a wheel block from the front for the front wheels or from the rear for the rear wheels.

—Removing wheel ornament

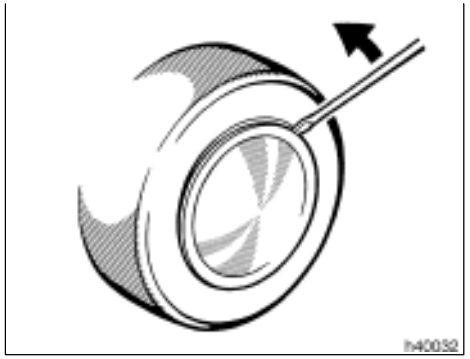

Type A

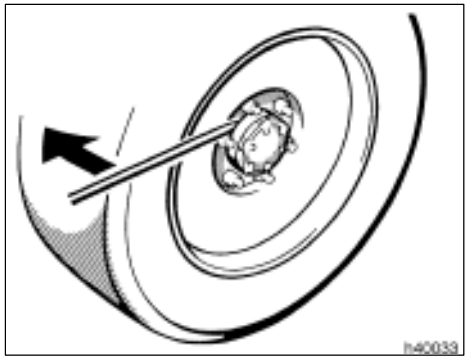

Type B

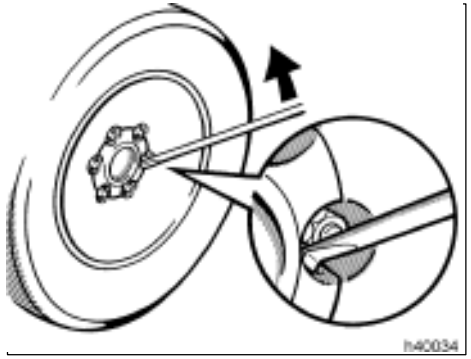

Type C

3. Remove the wheel ornament.

Pry off the wheel ornament, using the beveled end of the wheel nut wrench as shown.

CAUTION

Do not try to pull off the ornament by hand. Take due care in handling the ornament to avoid unexpected personal injury.

—Loosening wheel nuts

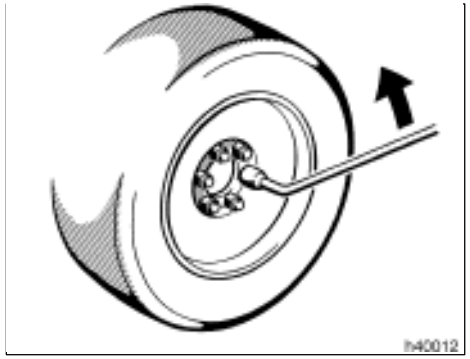

4. Loosen all the wheel nuts.

Always loosen the wheel nuts before raising the vehicle.

Turn the wheel nuts counterclockwise to loosen. To get maximum leverage, fit the wrench to the nut so that the handle is on the right side, as shown above. Grab the wrench near the end of the handle and pull up on the handle. Be careful that the wrench does not slip off the nut.

Do not remove the nuts yet—just unscrew them about one–half turn.

—Positioning the jack

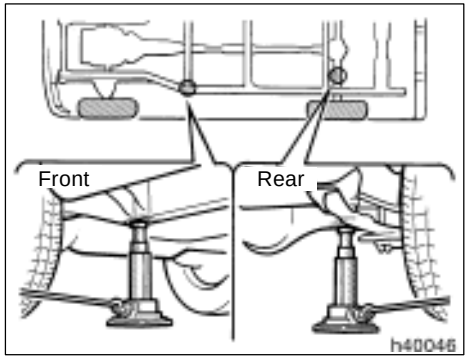

Two–wheel drive models except Pre Runner

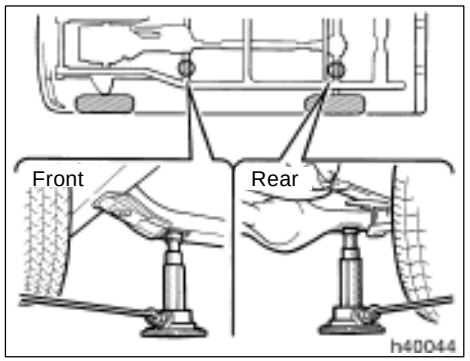

Four–wheel drive models and Pre Runner

5. Position the jack at the correct jack point as shown.

Make sure the jack is positioned on a level and solid place.

JACK POINTS:

Two–wheel drive models
except Pre Runner
Front—Under the frame side rail
Rear—Under the rear axle housing

Four–wheel drive models
and Pre Runner
Front—Under the front suspension cross member
Rear—Under the rear axle housing

—Raising your vehicle

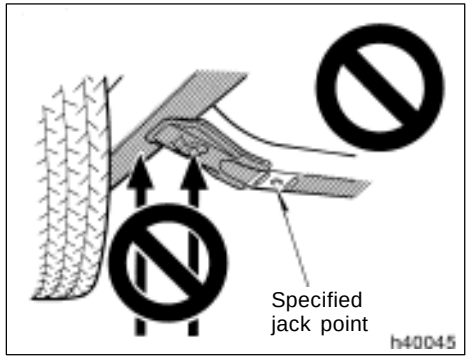

NOTICE

Only put the jack to the specified jack point; otherwise your vehicle may be damaged.

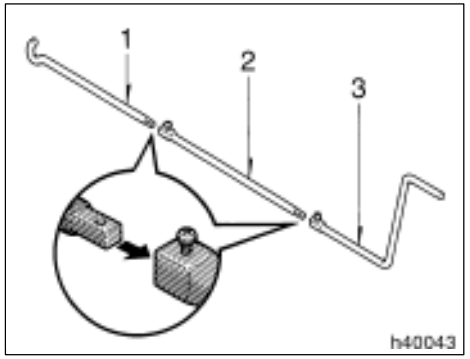

Xtra cab models—Put a jack handle, jack handle extension and jack handle end together as shown in the illustration.

1 Jack handle end
2 Jack handle extension
3 Jack handle

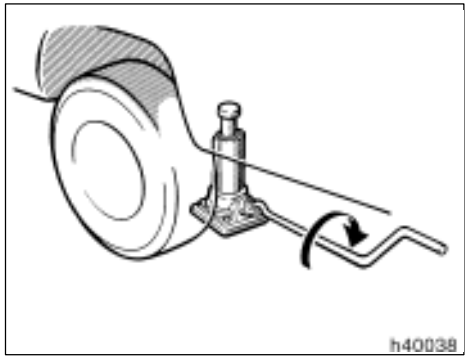

6. After making sure that no one is in the vehicle, raise it high enough so that the spare tire can be installed.

Remember you will need more ground clearance when putting on the spare tire than when removing the flat tire.

Normal cab models—To raise the vehicle, insert the jack handle into the jack (it is a loose fit) and turn it clockwise. As the jack touches the vehicle and begins to lift, double–check that it is properly positioned.

Xtra–cab models—To raise the vehicle, insert the jack handle extension into the jack (it is a loose fit) and turn it clockwise with the handle, making sure the handle remains firmly fitted onto the jack handle extension. As the jack touches the vehicle and begins to lift, double–check that it is properly positioned.

CAUTION

Never get under the vehicle when the vehicle is supported by the jack alone.

—Changing wheels





7. Remove the wheel nuts and change tires.

Lift the flat tire straight off and put it aside.

Roll the spare wheel into position and align the holes in the wheel with the bolts. Then lift up the wheel and get at least the top bolt started through its hole. Wiggle the tire and press it back over the other bolts.

Before putting on wheels, remove any corrosion on the mounting surfaces with a wire brush or such. Installation of wheels without good metal–to–metal contact at the mounting surface can cause wheel nuts to loosen and eventually cause a wheel to come off while driving. Therefore after the first 1600 km (1000 miles), check to see that the wheel nuts are tight.

—Reinstalling wheel nuts

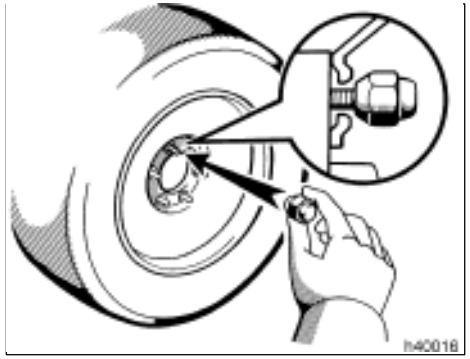

8. Reinstall all the wheel nuts finger tight.

Reinstall the wheel nuts (tapered end inward) and tighten them as much as you can by hand. Press back on the tire back and see if you can tighten them more.

—Lowering your vehicle

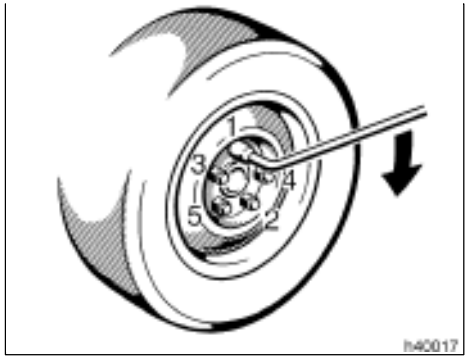

Two–wheel drive models

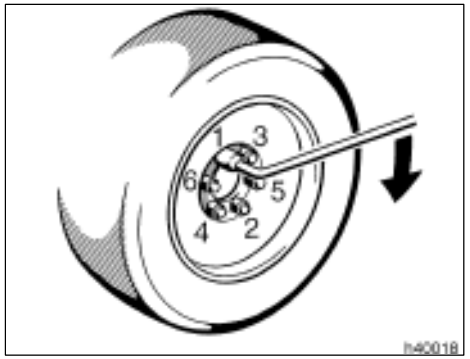

Four–wheel drive models

9. Lower the vehicle completely and tighten the wheel nuts.

Normal cab models—Turn the jack handle counterclockwise to lower the vehicle.

Xtra–cab models—Turn the jack handle extension counterclockwise with handle to lower the vehicle, making sure the handle remains firmly fitted onto the jack handle extension.

Use only the wheel nut wrench and turn it clockwise to tighten the nuts. Do not use other tools or any additional leverage other than your hands, such as a hammer, pipe or your foot. Make sure the wrench is securely engaged over the nut.

Tighten each nut a little at a time in the order shown. Repeat the process until all the nuts are tight.

CAUTION

When lowering the vehicle, make sure all portions of your body and all other persons around will not be injured as the vehicle is lowered to the ground.

—Reinstalling wheel ornament

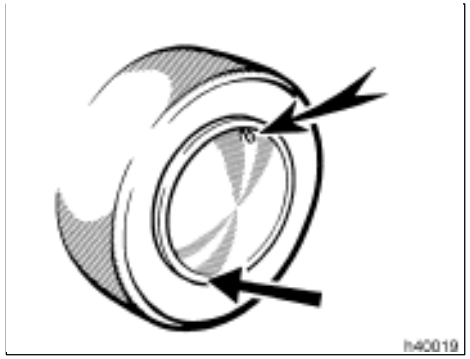

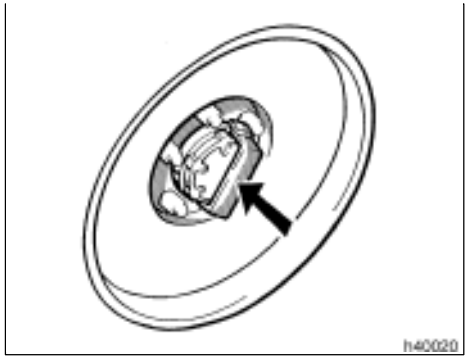

10. Reinstall the wheel ornament.

1. Put the wheel ornament in position.

On some models, align the cutout of the wheel ornament with the valve stem as shown.

2. Then firmly tap the outer edge of the wheel cap with the side or heel of your hand to snap it into place.

CAUTION

Take due care in handling the ornament to avoid unexpected personal injury.

On steel wheel ornaments for free–wheeling hubs, place the wheel ornament replacer over the opening and tap on the replacer to snap the ornament into place. Be careful not to slip off the replacer.

—After changing wheels

11. Check the air pressure of the replaced tire.

Adjust the air pressure to the specification designated in Section 8. If the pressure is lower, drive slowly to the nearest service station and fill to the correct pressure.

Do not forget to reinstall the tire inflation valve cap as dirt and moisture could get into the valve core and possibly cause air leakage. If the cap is missing, have a new one put on as soon as possible.

12. Restow all the tools, jack and flat tire securely.

As soon after changing wheels as possible, tighten the wheel nuts to the torque specified in Section 8 with a torque wrench. Have a technician repair the flat tire.

CAUTION

Before driving, make sure all the tools, jack and flat tire are securely in place in their storage location to reduce the possibility of personal injury during a collision or sudden braking.

If your vehicle needs to be towed—

(a) Towing with wheel lift type truck—

—From front



—From rear



(b) Using flat bed truck



h40024

Two–wheel drive models

(a) Towing with wheel lift type truck—

—From front



—From rear



(b) Using flat bed truck



h40025

Four–wheel drive models

If towing is necessary, we recommend you have it done by your Toyota dealer or a commercial tow truck service. In consultation with them, have your vehicle towed using either (a) or (b).

Only when you cannot receive a towing service from a Toyota dealer or commercial tow truck service, tow your vehicle carefully in accordance with the instructions given in “—Emergency towing” in this section.

Proper equipment will help ensure that your vehicle is not damaged while being towed. Commercial operators are generally aware of the state/provincial and local laws pertaining to towing.

Your vehicle can be damaged if it is towed incorrectly. Although most operators know the correct procedure, it is possible to make a mistake. To avoid damage to your vehicle, make sure the following precautions are observed. If necessary, show this page to the tow truck driver.

TOWING PRECAUTIONS:

Use a safety chain system for all towing, and abide by the state/provincial and local laws. The wheels and axle on the ground must be in good condition. If they are damaged, use a towing dolly.

Two–wheel drive models—

(a) Towing with wheel lift type truck

From front—

- Manual transmission:

We recommend using a towing dolly under the rear wheels. If you do not use a towing dolly, release the parking brake and put the transmission in neutral.

- Automatic transmission:

Use a towing dolly under the rear wheels.

NOTICE

Never tow a vehicle with an automatic transmission from the front with the rear wheels on the ground, as this may cause serious damage to the transmission.

From rear—Place the ignition key in the “ACC” position.

NOTICE

- ***When lifting wheels, take care to ensure adequate ground clearance for towing at the opposite end of the raised vehicle. Otherwise, the bumper and/or underbody of the towed vehicle will be damaged during towing.***
- ***Do not tow with the key removed or in the “LOCK” position, as the steering lock mechanism is not strong enough to hold the front wheels straight while towing.***

(b) Using flat bed truck

Four–wheel drive models—

(a) Towing with wheel lift type truck

From front—

- Manual transmission:

We recommend using a towing dolly under the rear wheels. If you do not use a towing dolly, release the parking brake, put the transmission in neutral and set the transfer in “H2” mode.

- Automatic transmission:

Use a towing dolly under the rear wheels.

NOTICE

Never tow a vehicle with an automatic transmission from the front with the rear wheels on the ground, as this may cause serious damage to the transmission.

From rear—We recommend using a towing dolly under the front wheels. If you do not use a towing dolly, place the ignition key in the “ACC” position, put the transmission in neutral and set the transfer in “H2” mode. Disengage both free–wheeling hubs if so equipped.

NOTICE
Do not tow with the key removed or in the “LOCK” position when towing from the rear without a towing dolly. The steering lock mechanism is not strong enough to hold the front wheels straight.

(b) Using flat bed truck

(c) Towing with sling type truck

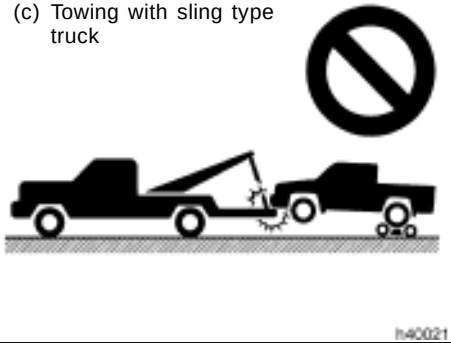

All models—

(c) Towing with sling type truck

NOTICE
Do not tow with sling type truck, either from the front or rear. This may cause body damage.

—Emergency towing (two–wheel drive models except Pre Runner)

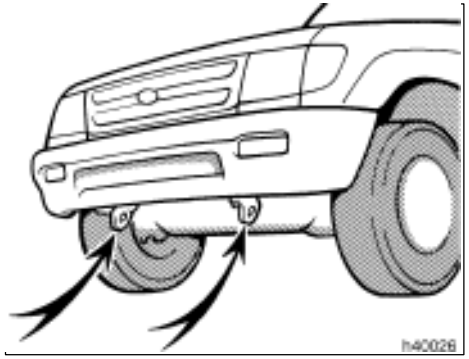

If towing is necessary, we recommend you to have it done by your Toyota dealer or a commercial tow truck service.

If towing service is not available in an emergency, your vehicle may be temporarily towed by a cable or chain secured to one of the emergency towing eyelets under the front of the vehicle. Use extreme caution when towing the vehicle.

NOTICE
Only use specified towing eyelet; otherwise your vehicle may be damaged.

A driver must be in the vehicle to steer it and operate the brakes.

Towing in this manner may be done only on hard–surfaced roads for a short distance and at low speeds. Also, the wheels, axles, drive train, steering and brakes must all be in good condition.

CAUTION

Use extreme caution when towing the vehicle. Avoid sudden starts or erratic driving maneuvers which would place excessive stress on the emergency towing eyelet and towing cable or chain. The eyelet and towing cable or chain may break and cause serious injury or damage.

NOTICE

Use only a cable or chain specifically intended for use in towing vehicles. Securely fasten the cable or chain to the towing eyelet provided.

Before towing, release the parking brake and put the transmission in neutral (manual) or “N” (automatic). The key must be in “ACC” (engine off) or “ON” (engine running).

CAUTION

If the engine is not running, the power assist for the brakes and steering will not work so steering and braking will be much harder than usual.

—Emergency towing (four–wheel drive models and Pre Runner)

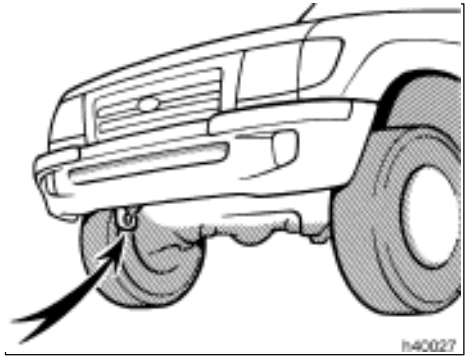

If towing is necessary, we recommend you to have it done by your Toyota dealer or a commercial tow truck service.

If towing service is not available in an emergency, your vehicle may be temporarily towed by a cable or chain secured to the emergency towing hook under the front of the vehicle. Use extreme caution when towing the vehicle.

NOTICE

Only use specified towing hook; otherwise your vehicle may be damaged.

A driver must be in the vehicle to steer it and operate the brakes.

Towing in this manner may be done only on hard–surfaced roads for a short distance and at low speeds. Also, the wheels, axles, drive train, steering and brakes must all be in good condition.

CAUTION

Use extreme caution when towing the vehicle. Avoid sudden starts or erratic driving maneuvers which would place excessive stress on the emergency towing hook and towing cable or chain. The hook and towing cable or chain may break and cause serious injury or damage.

NOTICE

Use only a cable or chain specifically intended for use in towing vehicles. Securely fasten the cable or chain to the towing hook provided.

Before towing, release the parking brake, put the transmission in neutral (manual) or “N” (automatic) and set the transfer in “H2” mode. The key must be in “ACC” (engine off) or “ON” (engine running).

CAUTION

If the engine is not running, the power assist for the brakes and steering will not work so steering and braking will be much harder than usual.

—Emergency towing hook precautions (four–wheel drive models)

- Before emergency towing, check that the hook is not broken or damaged and that the installation bolts are not loose.
- Fasten the towing cable or chain securely to the hook.
- Do not jerk the hook. Apply steady and even force.
- To avoid damaging the hook, do not pull from the side or at a vertical angle. Always pull straight ahead.

CAUTION

If the emergency towing hook is used to get out when your vehicle becomes stuck in the mud, sand or other condition from which the vehicle cannot be driven out under its own power, make sure to observe the precautions mentioned below. Otherwise, excessive stress will be put on the hook and the towing cable or chain may break, causing serious injury or damage.

- **If the towing vehicle can hardly move, do not forcibly continue the towing. Contact your Toyota dealer or a commercial tow truck service for assistance.**
- **Tow the vehicle as straight ahead as possible.**
- **Keep away from the vehicle during towing.**

—Tips for towing a stuck vehicle (four–wheel drive models)

The following methods are effective to use when your vehicle is stuck in the mud, sand or other condition from which the vehicle cannot be driven out under its own power. Use extreme caution when towing the vehicle. In addition, keep away from the vehicles and towing cable or chain when towing.

- Remove the sand and soil in the front and the back of the tires.
- Place stones or wood under the tires.

If you cannot shift automatic transmission selector lever (column shift)

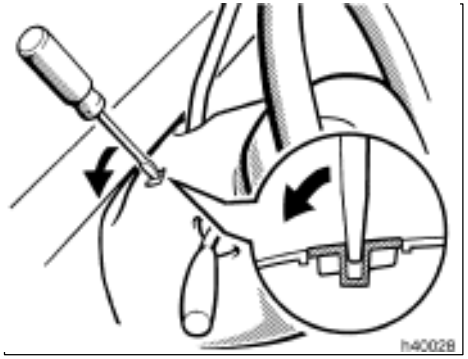

If you cannot shift the selector lever out of “P” position to other positions even though the brake pedal is depressed, use the shift lock override button as follows:

1. **Turn the ignition key to “LOCK” position. Make sure the parking brake is set.**
2. **Pry up the cover with a flat–bladed screwdriver or equivalent.**

If you cannot shift automatic transmission selector lever (floor shift)

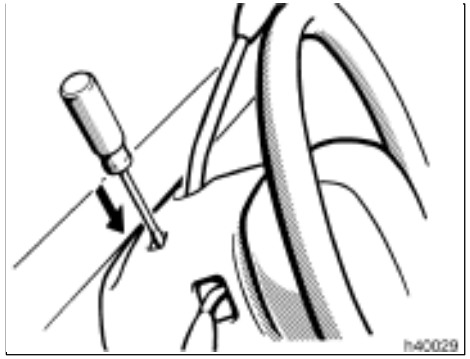

3. **Insert the screwdriver or equivalent into the hole to push up the shift lock override button. You can shift out of “P” position only while pushing the button.**
4. **Shift into “N” position.**
5. **Insert the cover.**
6. **Start the engine. For your safety, keep the brake pedal depressed.**

Be sure to have the system checked by your Toyota dealer as soon as possible.

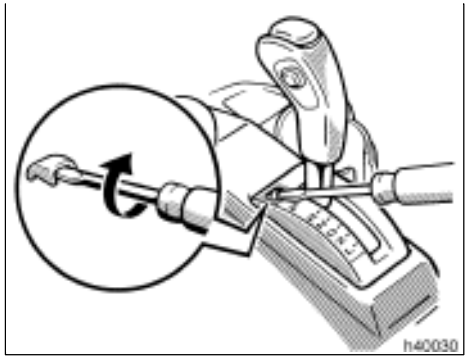

If you cannot shift the selector lever out of “P” position to other positions even though the brake pedal is depressed, use the shift lock override button as follows:

1. **Turn the ignition key to “LOCK” position. Make sure the parking brake is set.**
2. **Pry up the cover with a flat–bladed screwdriver or equivalent.**

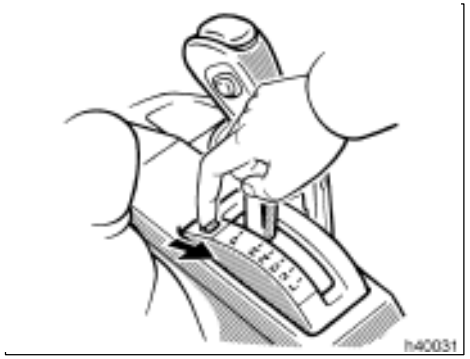

3. **Insert your finger into the hole to move the shift lock override lever backward. You can shift out of “P” position only while holding back the lever.**
4. **Shift into “N” position.**
5. **Insert the cover.**
6. **Start the engine. For your safety, keep the brake pedal depressed.**

Be sure to have the system checked by your Toyota dealer as soon as possible.

If you lose your keys

You can purchase a new key at your Toyota dealer if you can give them the key number.

See the suggestion given in “Keys” in Section 1–2.

If your keys are locked in the vehicle and you cannot get a duplicate, many Toyota dealers can still open the door for you, using their special tools. If you must break a window to get in, we suggest breaking the smallest side window because it is the least expensive to replace. Be extremely cautious to avoid cuts from the glass.

SECTION 5

CORROSION PREVENTION AND APPEARANCE CARE

Protecting your Toyota from corrosion 208
Washing and waxing your Toyota 209
Cleaning the interior 210

Protecting your Toyota from corrosion

Toyota, through its diligent research, design and use of the most advanced technology available, has done its part to help prevent corrosion and has provided you with the finest quality vehicle construction. Now, it is up to you. Proper care of your Toyota can help ensure long–term corrosion prevention.

The most common causes of corrosion to your vehicle are:

- The accumulation of road salt, dirt and moisture in hard–to–reach areas under the vehicle.
- Chipping of paint, or undercoating caused by minor accidents or by stones and gravel.

Care is especially important if you live in particular areas or operate your vehicle under certain environmental conditions:

- Road salt or dust control chemicals will accelerate corrosion, as will the presence of salt in the air near the sea–coast or in areas of industrial pollution.
- High humidity accelerates corrosion especially when temperatures range just above the freezing point.
- Wetness or dampness to certain parts of your vehicle for an extended period of time, may cause corrosion even though other parts of the vehicle may be dry.
- High ambient temperatures can cause corrosion to those components of the vehicle which are prevented from quick–drying due to lack of proper ventilation.

The above signifies the necessity to keep your vehicle, particularly the underside, as clean as possible and to repair any damage to paint or protective coatings as soon as possible.

To help prevent corrosion on your Toyota, follow these guidelines:

Wash your vehicle frequently. It is, of course, necessary to keep your vehicle clean by regular washing, but to prevent corrosion, the following points should be observed:

- If you drive on salted roads in the winter or if you live near the ocean, you should hose off the undercarriage at least once a month to minimize corrosion.
- High pressure water or steam is effective for cleaning the vehicle’s underside and wheel housings. Pay particular attention to these areas as it is difficult to see all the mud and dirt. It will do more harm than good to simply wet the mud and debris without removing them. The lower edge of doors, rocker panels and frame members have drain holes which should not be allowed to clog with dirt as trapped water in these areas can cause corrosion.
- Wash the underside of the vehicle thoroughly when winter is over.

See “Washing and waxing your Toyota” for more tips.

Check the condition of your vehicle’s paint and trim. If you find any chips or scratches in the paint, touch them up immediately to prevent corrosion from starting. If the chips or scratches have gone through the bare metal, have a qualified body shop make the repair.

Check the interior of your vehicle. Water and dirt can accumulate under the floor mats and could cause corrosion. Occasionally check under the mats to make sure the area is dry. Be particularly careful when transporting chemicals, cleansers, fertilizers, salt, etc.; these should be transported in proper containers. If a spill or leak should occur, immediately clean and dry the area.

Use mud shields on your wheels. If you drive on salted or gravel roads, mud shields help protect your vehicle. Full–size shields, which come as near to the ground as possible, are the best. We recommend that the fittings and the area where the shields are installed be treated to resist corrosion. Your Toyota dealer will be happy to assist in supplying and installing the shields if they are recommended for your area.

Keep your vehicle in a well ventilated garage or a roofed place. Do not park your vehicle in a damp, poorly ventilated garage. If you wash your vehicle in the garage, or if you drive it in covered with water or snow, your garage may be so damp it will cause corrosion. Even if your garage is heated, a wet vehicle can corrode if the ventilation is poor.

Washing and waxing your Toyota

Washing your Toyota

Keep your vehicle clean by regular washing.

The following cases may cause weakness to the paint or corrosion to the body and parts. Wash your vehicle as soon as possible.

- When driving in a coastal area
- When driving on a road sprinkled with antifreeze
- When having stuck of coal tar, tree sap, bird droppings and carcass of an insect
- When driving in the areas where there is a lot of smoke, soot, dust, iron dust and chemical substance
- When the vehicle becomes remarkably dirty with dust and mud

Hand–washing your Toyota

Work in the shade and wait until the vehicle body is not hot to the touch.

CAUTION

When cleaning under floor or chassis, be careful not to injure your hands.

1. Rinse off loose dirt with a hose. Remove any mud or road salt from the underside of the vehicle or in the wheel wells.
2. Wash with a mild car–wash soap, mixed according to the manufacturer’s instructions. Use a soft cotton mitt and keep it wet by dipping it frequently into the wash water. Do not rub hard—let the soap and water remove the dirt.

Plastic wheel ornaments: The plastic wheel ornaments are damaged easily by organic substances. If any organic substances splashes an ornament, be sure to wash it off with water and check if the ornament is damaged.

CAUTION

Do not attach the heavily damaged plastic wheel ornament. It may fly off the wheel and cause accidents while the vehicle is moving.

Aluminum wheels: Use only a mild soap or neutral detergent.

Road tar: Remove with turpentine or cleaners that are marked safe for painted surfaces.

NOTICE

Do not use organic substances (gasoline, kerosene, benzine or strong solvents), which may be toxic or cause damage.

3. Rinse thoroughly—dried soap can cause streaking. In hot weather you may need to rinse each section right after you wash it.
4. To prevent water spots, dry the vehicle using a clean soft cotton towel. Do not rub or press hard—you might scratch the paint.

Waxing your Toyota

Polishing and waxing is recommended to maintain the original beauty of your Toyota's finish.

Once a month or if the vehicle surface does not repel water well, apply wax.

1. Always wash and dry the vehicle before you begin waxing, even if you are using a combined cleaner and wax.
2. Use a good quality polish and wax. If the finish has become extremely weathered, use a car–cleaning polish, followed by a separate wax. Carefully follow the manufacturer's instructions and precautions. Be sure to polish and wax the chrome trim as well as the paint.
3. Wax the vehicle again when water does not bead but remains on the surface in large patches.

Cleaning the interior

⚠ CAUTION

Do not wash the vehicle floor with water, or allow water to get onto the floor when cleaning the vehicle interior or exterior. Water may get into audio components or other electrical components above or under the floor carpet (or mat) and cause a malfunction; and it may cause body corrosion.

Vinyl interior

The vinyl upholstery may be easily cleaned with a mild soap or detergent and water.

First vacuum over the upholstery to remove loose dirt. Then, using a sponge or soft cloth, apply the soap solution to the vinyl. After allowing it to soak in for a few minutes to loosen the dirt, remove the dirt and wipe off the soap with a clean damp cloth. If all the dirt do not come off, repeat the procedure. Commercial foaming–type vinyl cleaners are also available which work well. Follow the manufacturer's instructions.

NOTICE

Do not use solvent, thinner, gasoline or window cleaner on the interior.

Carpets

Use a good foam–type shampoo to clean the carpets.

Begin by vacuuming thoroughly to remove as much dirt as possible. Several types of foam cleaners are available; some are in aerosol cans and others are powders or liquids which you mix with water to produce a foam. To shampoo the carpets, use a sponge or brush to apply the foam. Rub in overlapping circles.

Do not apply water—the best results are obtained by keeping the carpet as dry as possible. Read the shampoo instructions and follow them closely.

Seat belts

The seat belts may be cleaned with mild soap and water or with lukewarm water.

Use a cloth or sponge. As you are cleaning, check the belts for excessive wear, fraying, or cuts.

NOTICE

- ***Do not use dye or bleach on the belts—it may weaken them.***
- ***Do not use the belts until they become dry.***

Windows

The windows may be cleaned with any household window cleaner.

Air conditioning control panel, car audio, instrument panel, console panel, and switches

Use a soft damp cloth for cleaning.

Soak a clean soft cloth in water or lukewarm water then lightly wipe off dirt.

NOTICE

- ***Do not use organic substances (solvents, kerosene, alcohol, gasoline, etc.) or alkaline or acidic solutions. These chemicals can cause discoloring, staining or peeling of the surface.***
- ***If you use cleaners or polishing agents, make sure their ingredients do not include the substances mentioned above.***
- ***If you use a liquid car freshener, do not spill the liquid onto the vehicle's interior surfaces. It may contain the ingredients mentioned above. Immediately clean any spill using the method mentioned above.***

Leather Interior

The leather upholstery may be cleaned with neutral detergent for wool.

Remove dirt using a soft cloth dampened with 5% solution of neutral detergent for wool. Then thoroughly wipe off all traces of detergent with a clean damp cloth.

After cleaning or whenever any part of the leather gets wet, dry with a soft clean cloth. Allow the leather to dry in a ventilated shaded area.

NOTICE

- ***If a stain should fail to come out with a neutral detergent, apply a cleaner that does not contain an organic solvent.***
- ***Never use organic substances such as benzine, alcohol or gasoline or alkaline or acid solutions for cleaning the leather as these could cause discoloring.***
- ***Use of a nylon brush or synthetic fiber cloth, etc. may scratch the fine grained surface of the leather.***
- ***Mildew may develop on soiled leather upholstery. Be especially careful to avoid oil spots. Try to keep your upholstery always clean.***
- ***Long exposure to direct sunlight may cause the leather surface to harden and shrink. Keep your vehicle in a shaded area, especially in the summer.***
- ***The interior of your vehicle is apt to heat up on hot summer days, so avoid placing on the upholstery items made of vinyl or plastic or containing wax as these tend to stick to leather when warm.***
- ***Improper cleaning of the leather upholstery could result in discoloration or staining.***

If you have any questions about the cleaning of your Toyota, your local Toyota dealer will be pleased to answer them.

SECTION 6

VEHICLE MAINTENANCE AND CARE

Maintenance requirements 214
General maintenance 215
Does your vehicle need repairing? 217

For scheduled maintenance information, please refer to the separate “Scheduled Maintenance Guide” or “Owner’s Manual Supplement”.

Maintenance requirements

Your Toyota vehicle has been designed to for fewer maintenance requirements with longer service intervals to save both your time and money. However, each regular maintenance, as well as day–to–day care, is more important than ever before to ensure smooth, and trouble–free, safe, and economical drivings.

It is the owner’s responsibility to make sure the specified maintenance, including general maintenance service, is performed. Note that both the new vehicle and emission control system warranties specify that proper maintenance and care must be performed. See “Owner’s Warranty Information Booklet” or “Owner’s Manual Supplement” for complete warranty information.

General maintenance

General maintenance items are those day–to–day care practices that are important to your vehicle for proper operation. It is the owner’s responsibility to ensure that the general maintenance items are performed regularly.

These checks or inspections can be done either by yourself or a qualified technician, or if you prefer, your Toyota dealer will be pleased to do them at a nominal cost.

Scheduled maintenance

The scheduled maintenance items listed in the “Scheduled Maintenance Guide” or “Owner’s Manual Supplement” are those required to be serviced at regular intervals.

For details of your maintenance schedule, read the separate “Scheduled Maintenance Guide” or “Owner’s Manual Supplement”.

It is recommended that any replacement parts used for maintenance or for the repair of the emission control system be Toyota supplied.

The owner may elect to use non–Toyota supplied parts for replacement purposes without invalidating the emission control system warranty. However, use of replacement parts which are not of equivalent quality may impair the effectiveness of the emission control systems.

You may also elect to have maintenance, replacement, or repair of the emission control devices and system performed by any automotive repair establishment or individual without invalidating this warranty. See “Owner’s Warranty Information Booklet” or “Owner’s Manual Supplement” for complete warranty information.

Where to go for service?

Toyota technicians are well–trained specialists and are kept up to date with the latest service information through technical bulletins, service tips, and in–dealership training programs. They learn to work on Toyotas before they work on your vehicle, rather than while they are working on it.

You can be confident that your Toyota dealer’s service department performs the best job to meet the maintenance requirements on your vehicle—reliably and economically.

Your copy of the repair order is proof that all required maintenance has been performed for warranty coverage. And if any problems should arise with your vehicle while under warranty, your Toyota dealer will promptly take care of it. Again, be sure to keep a copy of the repair order for any service performed on your Toyota.

What about do–it–yourself maintenance?

Many of the maintenance items are easy to do yourself if you have a little mechanical ability and a few basic automotive tools. Simple instructions for how to perform them are presented in Section 7.

If you are a skilled do–it–yourself mechanic, the Toyota service manuals are recommended. Please be aware that do–it–yourself maintenance can affect your warranty coverage. See “Owner’s Warranty Information Booklet” or “Owner’s Manual Supplement” for the details.

General maintenance

Listed below are the general maintenance items that should be performed as frequently as specified. In addition to checking the items listed, if you notice any unusual noise, smell or vibration, you should investigate the cause or take your vehicle to your Toyota dealer or a qualified service shop immediately. It is recommended that any problem you notice be brought to the attention of your dealer or the qualified service shop for their advice.

CAUTION

Make these checks only where adequate ventilation can be obtained if you run the engine.

OUTSIDE THE VEHICLE

Items listed below should be performed from time to time, unless otherwise specified.

Tire pressure

Check the pressure with a gauge every two weeks, or at least once a month. See Section 7–2 for additional information.

Tire surface and wheel nuts

Check the tires carefully for cuts, damage or excessive wear. See Section 7–2 for additional information. When checking the tires, make sure no nuts are missing, and check the nuts for looseness. Tighten them if necessary.

Tire rotation

Rotate the tires every 12000 km (7500 miles). See Section 7–2 for additional information.

Fluid leaks

Check underneath for leaking fuel, oil, water or other fluid after the vehicle has been parked for a while. If you smell fuel fumes or notice any leak, have the cause found and corrected immediately.

Doors and engine hood

Check that all doors including tailgate operate smoothly and all latches lock securely. Make sure the engine hood secondary latch secures the hood from opening when the primary latch is released.

INSIDE THE VEHICLE

Items listed below should be checked regularly, e.g. while performing periodic services, cleaning the vehicle, etc.

Lights

Make sure the headlights, stop lights, tail lights, turn signal lights, and other lights are all working. Check headlight aim.

Service reminder indicators and warning buzzers

Check that all service reminder indicators and warning buzzers function properly.

Steering wheel

Be alert for changes in steering condition, such as hard steering or strange noise.

Seats

Check that all seat controls such as seat adjusters, seatback recliner, etc. operate smoothly and that all latches lock securely in any position. Check that the head restraints move up and down smoothly and that the locks hold securely in any latched position. For folding–down seatback (bench seat), check that the latches lock securely.

Seat belts

Check that the seat belt system such as buckles, retractors and anchors operate properly and smoothly. Make sure the belt webbing is not cut, frayed, worn or damaged.

Accelerator pedal

Check the pedal for smooth operation and uneven pedal effort or catching.

Clutch pedal

Check the pedal for smooth operation.

Brake pedal

Check the pedal for smooth operation and that the pedal has the proper clearance. Check the brake booster function.

Brakes

At a safe place, check that the brakes do not pull to one side when applied.

Parking brake

Check that the lever has the proper travel and that, on a safe incline, your vehicle is held securely with only the parking brake applied.

Automatic transmission “Park” mechanism

Check the lock release button of the selector lever (floor shift type) for proper and smooth operation. On a safe incline, check that your vehicle is held securely with the selector lever in “P” position and all brakes released.

IN THE ENGINE COMPARTMENT

Items listed below should be checked from time to time, e.g. each time when refueling.

Washer fluid

Make sure there is sufficient fluid in the tank. See Section 7–3 for additional information.

Engine coolant level

Make sure the coolant level is between the “F” and “L” lines on the see–through reservoir when the engine is cold. See Section 7–2 for additional information.

Battery electrolyte level

Make sure the electrolyte level of all battery cells is between upper and lower level lines on the case. Add only distilled water when replenishing. See Section 7–3 for additional information.

Brake fluid level

Make sure the brake fluid level is correct. See Section 7–2 for additional information.

Engine oil level

Check the level on the dipstick with the engine turned off and the vehicle parked on a level spot. See Section 7–2 for additional information.

Power steering fluid level

Check the level on the dipstick. The level should be in the “HOT” or “COLD” range depending on the fluid temperature. See Section 7–2 for additional information.

Exhaust system

If you notice any change in the sound of the exhaust or smell exhaust fumes, have the cause located and corrected immediately. (See engine exhaust cautions in Section 2.)

Does your vehicle need repairing?

Be on the alert for changes in performance, sounds, and visual tip–offs that indicate service is needed. Some important clues are as follows:

- Engine missing, stumbling, or pinging
- Appreciable loss of power
- Strange engine noises
- A leak under the vehicle (however, water dripping from the air conditioning after use is normal.)
- Change in exhaust sound (This may indicate a dangerous carbon monoxide leak. Drive with the windows open and have the exhaust system checked immediately.)
- Flat–looking tire; excessive tire squeal when cornering; uneven tire wear
- Vehicle pulls to one side when driving straight on a level road
- Strange noises related to suspension movement
- Loss of brake effectiveness; spongy feeling brake or clutch pedal; pedal almost touches floor; vehicle pulls to one side when braking
- Engine coolant temperature continually higher than normal

If you notice any of these clues, take your vehicle to your Toyota dealer as soon as possible. It probably needs adjustment or repair.

CAUTION

Do not continue driving with the vehicle unchecked. It could result in serious vehicle damage and possibly personal injury.

SECTION 7–1

DO–IT–YOURSELF MAINTENANCE

Introduction

Engine compartment overview 220
Fuse locations 222
Do–it–yourself service precautions 222
Parts and tools 224

Engine compartment overview

▶2RZ–FE and 3RZ–FE engines

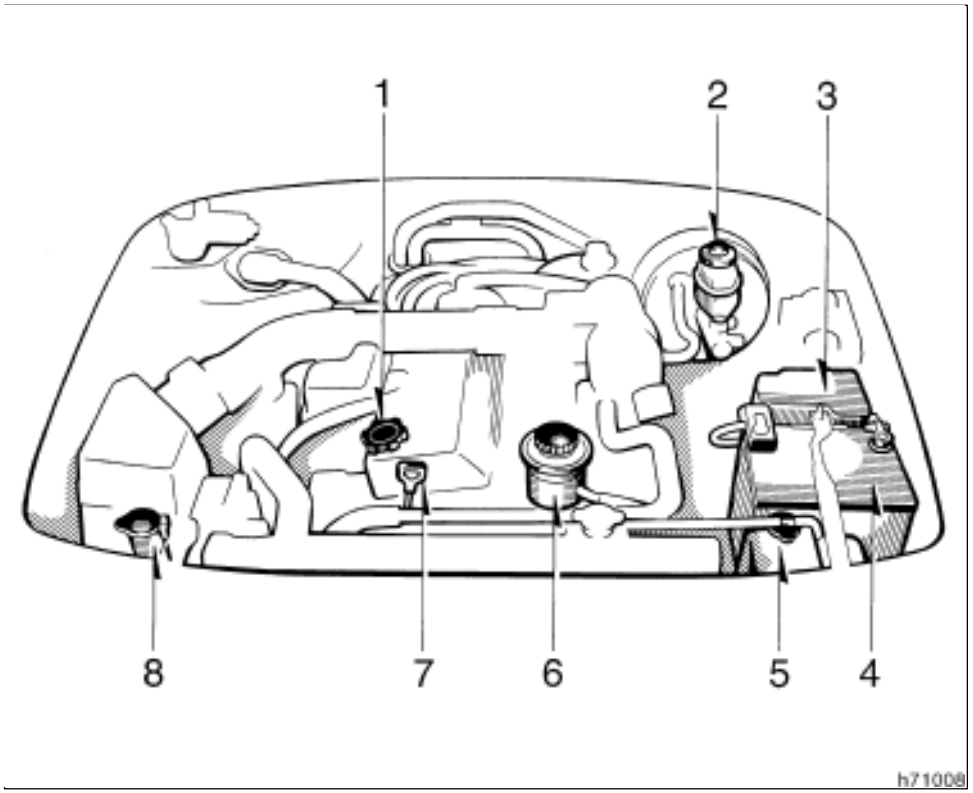

1. Engine oil filler cap
2. Brake fluid reservoir
3. Fuse block
4. Battery
5. Engine coolant reservoir
6. Power steering fluid reservoir
7. Engine oil level dipstick
8. Windshield washer fluid tank

▶5VZ–FE engine

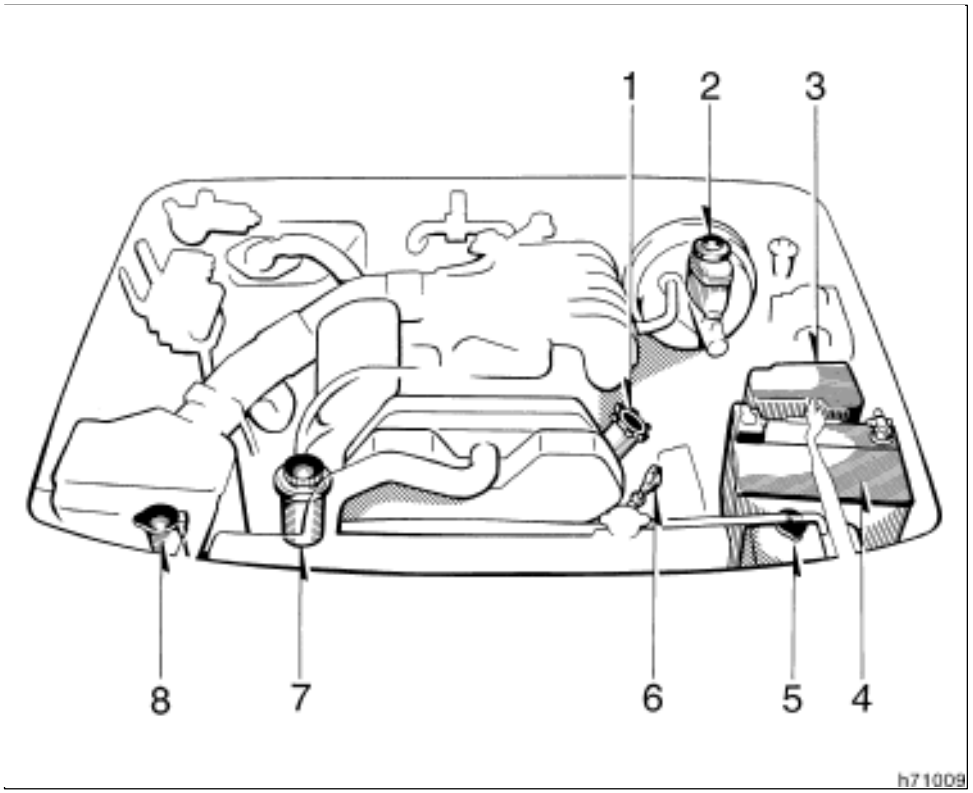

1. Engine oil filler cap
2. Brake fluid reservoir
3. Fuse block
4. Battery
5. Engine coolant reservoir
6. Engine oil level dipstick
7. Power steering fluid reservoir
8. Windshield washer fluid tank

Fuse locations

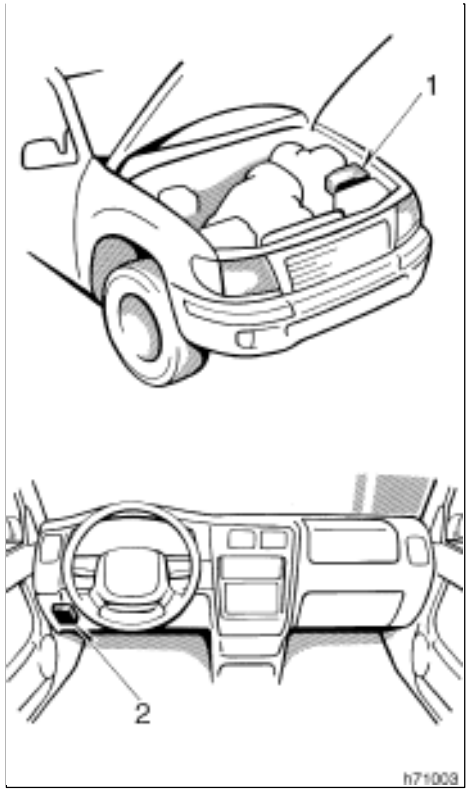

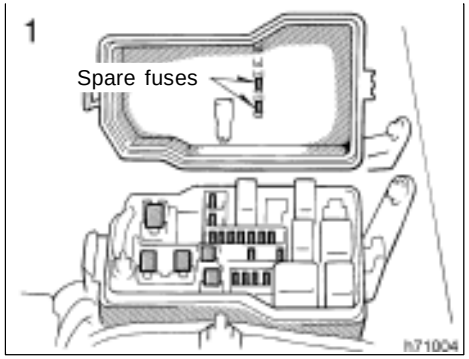

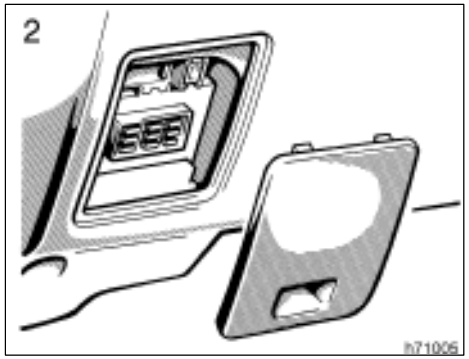

Do–it–yourself service precautions

If you perform maintenance by yourself, be sure to follow the correct procedure given in this section.

You should be aware that improper or incomplete servicing may result in operating problems.

Performing do–it–yourself maintenance during the warranty period may affect your warranty coverage. Read the separate Toyota Warranty statement for details and suggestions.

This section gives instructions only for those items that are relatively easy for an owner to perform. As explained in Section 6, there are still a number of items that must be done by a qualified technician with special tools.

For information on tools and parts for do–it–yourself maintenance, see “Parts and tools”.

Utmost care should be taken when working on your vehicle to prevent accidental injury. Here are a few precautions that you should be especially careful to observe:

CAUTION

- When the engine is running, keep hands, clothing, and tools away from the moving fan and engine drive belts. (Removing rings, watches, and ties is advisable.)
- Right after driving, the engine compartment—the engine, radiator, exhaust manifold, power steering fluid reservoir and spark plug boots, etc.—will be hot. So be careful not to touch them. Oil, fluids and spark plugs may also be hot.
- If the engine is hot, do not remove the radiator cap or loosen the drain plugs to prevent burning yourself.
- Do not smoke, cause sparks or allow open flames around fuel or the battery. Their fumes are flammable.
- Be extremely cautious when working on the battery. It contains poisonous and corrosive sulfuric acid.
- Do not get under your vehicle with just the body jack supporting it. Always use automotive jack stands or other solid supports.

- Use eye protection whenever you work on or under your vehicle where you may be exposed to flying or falling material, fluid spray, etc.
- Used engine oil contains potentially harmful contaminants which may cause skin disorders such as inflammation or skin cancer, so care should be taken to avoid prolonged and repeated contact with it. To remove used engine oil from your skin, wash thoroughly with soap and water.
- Do not leave used oil within the reach of children.
- Dispose of used oil and filter only in a safe and acceptable manner. Do not dispose of used oil and filter in household trash, in sewers or onto the ground. Call your dealer or a service station for information concerning recycling or disposal.

NOTICE

- *Remember that battery and ignition cables carry high currents or voltages. Be careful of accidentally causing a short circuit.*
- *Add only demineralized or distilled water to fill the radiator. And if you spill some of the coolant, be sure to wash it off with water to prevent it from damaging the parts or paint.*
- *Do not allow dirt or anything else to fall through the spark plug holes.*
- *Do not pry the outer electrode of a spark plug against the center electrode.*
- *Use only spark plugs of the specified type. Using other types will cause engine damage, loss of performance or radio noise.*
- *Do not overfill automatic transmission fluid, or the transmission could be damaged.*
- *Do not drive with the air cleaner filter removed, or excessive engine wear could result. Also backfiring could cause a fire in the engine compartment.*

◆ ***Be careful not to scratch the glass surface with the wiper frame.***

◆ ***When closing the engine hood, check to see that you have not forgotten any tools, rags, etc.***

Parts and tools

Here is a list of parts and tools you will need on performing do–it–yourself maintenance. Remember all Toyota parts are designed in metric sizes, so your tools must be metric.

Checking the engine oil level

Parts (if level is low):

- Engine oil API grade SJ, “Energy–Conserving” or ILSAC multigrade having viscosity proper for your climate

Tools:

- Rag or paper towel
- Funnel (only for adding oil)

Checking the engine coolant level

Parts (if level is low):

- “TOYOTA Long Life Coolant” or equivalent
  See Section 7–2 for details about coolant type selection.
- Demineralized or distilled water

Tools:

- Funnel (only for adding coolant)

Checking brake fluid

Parts (if level is low):

- SAE J1703 or FMVSS No.116 DOT 3 brake fluid

Tools:

- Rag or paper towel
- Funnel (only for adding fluid)

Checking power steering fluid

Parts (if level is low):

- Automatic transmission fluid DEXRON®II or III

Tools:

- Rag or paper towel
- Funnel (only for adding fluid)

Checking battery condition

Tools:

- Warm water
- Baking soda
- Grease
- Conventional wrench (for terminal clamp bolts)

Checking and replacing fuses

Parts (if replacement is necessary):

- Fuse with same amperage rating as original

Adding washer fluid

Parts:

- Water
- Washer fluid containing antifreeze (for winter use)

Tools:

- Funnel

Replacing light bulbs

Parts:

- Bulb with same number and wattage rating as original (See charts in “Replacing light bulbs” in Section 7–3.)

Tools:

- Screwdriver

SECTION 7–2

DO–IT–YOURSELF MAINTENANCE

Engine and Chassis

Checking the engine oil level 228
Checking the engine coolant level 229
Checking brake fluid 230
Checking power steering fluid 231
Checking tire pressure 232
Checking and replacing tires 233
Rotating tires 234
Installing snow tires and chains 234
Replacing wheels 235
Aluminum wheel precautions 236

Checking the engine oil level

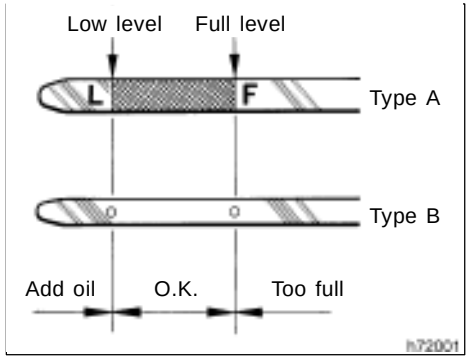

With the engine at operating temperature and turned off, check the oil level on the dipstick.

1. To get a true reading, the vehicle should be on a level spot. After turning off the engine, wait a few minutes for the oil to drain back into the bottom of the engine.
2. Pull out the dipstick, and wipe it clean with a rag.
3. Reinsert the dipstick—push it in as far as it will go, or the reading will not be correct.
4. Pull the dipstick out and look at the oil level on the end.

CAUTION

Be careful not to touch the hot exhaust manifold.

If the oil level is below or only slightly above the low level, add engine oil of the same type as already in the engine.

Remove the oil filler cap and add engine oil in small quantities at a time, checking the dipstick.

The approximate quantity of oil needed to fill between the low level and the full level on the dipstick is indicated below for reference.

When the level reaches within the correct range, install the filler cap hand–tight.

Oil quantity, L (qt., Imp. qt.):

2RZ–FE and 3RZ–FE engines
1.5 (1.6, 1.3)

5VZ–FE engine
Two–wheel drive models except Pre Runner
1.5 (1.6, 1.3)
Four–wheel drive models and Pre Runner
1.2 (1.3, 1.1)

NOTICE

- ***Avoid overfilling, or the engine could be damaged.***
- ***Check the oil level on the dipstick once again after adding the oil.***

Engine oil selection

Use API grade SJ, “Energy–Conserving” or ILSAC multigrade engine oil.

Recommended viscosity (SAE):

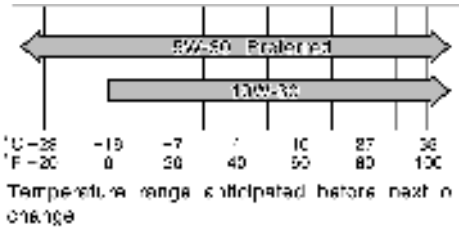

SAE 5W–30 is the best choice for your vehicle, for good fuel economy, and good starting in cold weather.

If you use SAE 10W–30 engine oil in extremely low temperatures, the engine may become difficult to start, so SAE 5W–30 engine oil is recommended.



API service symbol



ILSAC certification mark

Oil identification marks

Either or both API registered marks are added to some oil containers to help you select the oil you should use.

The API Service Symbol is located anywhere on the outside of the container.

The top portion of the label shows the oil quality by API (American Petroleum Institute) designations such as SJ. The center portion of the label shows the SAE viscosity grade such as SAE 5W–30. “Energy–Conserving” shown in the lower portion, indicates that the oil has fuel–saving capabilities.

The ILSAC (International Lubricant Standardization and Approval Committee) Certification Mark is displayed on the front of the container.

Checking the engine coolant level

Look at the see–through coolant reservoir when the engine is cold. The coolant level is satisfactory if it is between the “F” and “L” lines on the reservoir. If the level is low, add ethylene–glycol type coolant for a proper corrosion protection of aluminum components.

The coolant level in the reservoir will vary with engine temperature. However, if the level is on or below the “L” line, add coolant. Bring the level up to the “F” line.

Always use ethylene–glycol type coolant for a proper corrosion protection of aluminum components. See information in the next column.

If the coolant level drops within a short time after replenishing, there may be a leak in the system. Visually check the radiator, hoses, radiator cap and drain cock and water pump.

If you can find no leak, have your Toyota dealer test the cap pressure and check for leaks in the cooling system.

CAUTION

To prevent burning yourself, do not remove the radiator cap when the engine is hot.

Coolant type selection

Use of improper coolants may damage your engine cooling system. Your coolant must contain ethylene–glycol type coolant for a proper corrosion protection of your engine that contains aluminum components. Use "TOYOTA Long Life Coolant" or equivalent.

In addition to preventing freezing and subsequent damage to the engine, this type of coolant will also prevent corrosion. Further supplemental inhibitors or additives are neither needed nor recommended.

Read the coolant container for information on freeze protection. Follow the manufacturer's directions for how much to mix with plain water (preferably demineralized water or distilled water). The total capacity of the cooling system is given in Section 8.

We recommend to use 50% solution for your Toyota, to provide protection down to about –35°C (–31°F). When it is extremely cold, to provide protection down to about –50°C (–58°F), 60% solution is recommended. Do not use more than 70% solution for better coolant performance.

NOTICE

Do not use alcohol type antifreeze or plain water alone.

Checking brake fluid

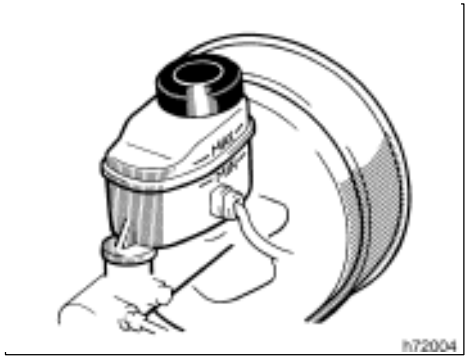

Type A

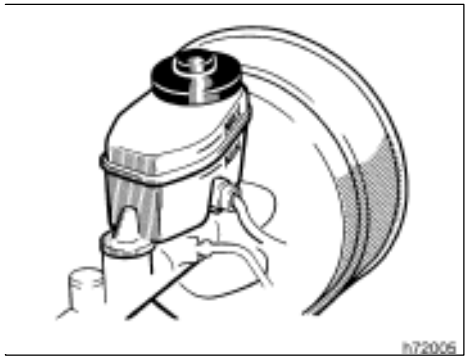

Type B

To check the fluid level, simply look at the see–through reservoir. The level should be between the "MAX" and "MIN" lines on the reservoir.

It is normal for the brake fluid level to go down slightly as the brake pads wear. So be sure to keep the reservoir filled.

If the reservoir needs frequent refilling, it may indicate a serious mechanical problem.

If the level is low, add SAE J1703 or FMVSS No.116 DOT 3 brake fluid to the brake reservoir.

Remove and replace the reservoir cover by hand. Fill the brake fluid to the dotted line. This brings the fluid to the correct level when you put the cover back on.

Use only newly opened brake fluid. Once opened, brake fluid absorbs moisture from the air, and excess moisture can cause a dangerous loss of braking.

CAUTION

Take care when filling the reservoir because brake fluid can harm your eyes and damage painted surfaces. If fluid gets in your eyes, flush your eyes with clean water.

NOTICE

If you spill the fluid, be sure to wash it off with water to prevent it from damaging the parts or paint.

Checking power steering fluid

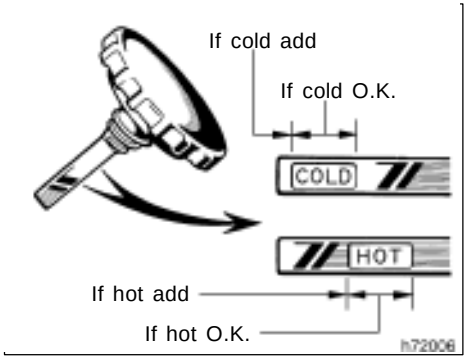

Check the fluid level on the dipstick. If necessary, add automatic transmission fluid DEXRON®II or III.

If the vehicle has been driven around 80 km/h (50 mph) for 20 minutes (a little more in frigid temperatures), the fluid is hot (40°C—80°C or 104°F—175°F). You may also check the level when the fluid is cold (about room temperature, 0°C—40°C or 32°F—104°F) if the engine has not been run for about five hours.

a. Clean all dirt from outside of the reservoir tank.

b. Remove the filler cap by turning it counterclockwise and wipe the dipstick clean.

c. Reinstall the filler cap

d. Remove the filler cap again and look at the fluid level. If the fluid is cold, the level should be in the "COLD" range on the dipstick. Similarly, if it is hot, the fluid level should be in the "HOT" range. If the level is at the low side of either range, add automatic transmission fluid DEXRON®II or III to bring the level within the range.

e. After replacing the filler cap, visually check the steering box case, vane pump and hose connections for leaks or damage.

CAUTION

The reservoir tank may be hot so be careful not to burn yourself.

NOTICE

Avoid overfilling, or the power steering could be damaged.

Checking tire pressure

Keep your tire pressures at the proper level.

The recommended cold tire pressures, tire size and the cargo weight rating are given in Section 8.

You should check the tire pressures every two weeks, or at least once a month. And do not forget the spare!

Incorrect tire pressure can reduce tire life and make your vehicle less safe to drive.

Low tire pressure results in excessive wear, poor handling, reduced fuel economy, and the possibility of blowouts from overheated tires. Also, low tire pressure can cause poor sealing of the tire bead. If the tire pressure is excessively low, there is the possibility of wheel deformation and/or tire separation.

High tire pressure produces a harsh ride, handling problems, excessive wear at the center of the tire tread, and a greater possibility of tire damage from road hazards.

If a tire frequently needs refilling, have it checked by your Toyota dealer.

The following instructions for checking tire pressure should be observed:

- **The pressure should be checked only when the tires are cold.** If your vehicle has been packed for at least 3 hours and has not been driven for more than 1.5 km or 1 mile since, you will get an accurate cold tire pressure reading.
- **Always use a tire pressure gauge.** The appearance of a tire can be misleading. Besides, tire pressures that are even just a few pounds off can degrade handling and ride.
- **Do not bleed or reduce tire pressure after driving.** It is normal for the tire pressure to be higher after driving.
- **Never exceed the cargo weight rating.** The luggage weight should be distributed evenly.
- **Be sure to reinstall the tire inflation valve caps.** Without the valve caps, dirt or moisture could get into the valve core and cause air leakage. If the caps have been lost, have new ones put on as soon as possible.

Checking and replacing tires

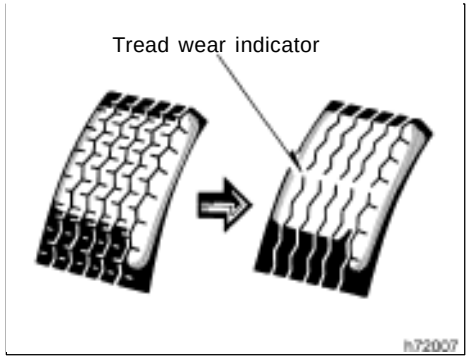

CHECKING YOUR TIRES

Check the tire tread for the tread wear indicators. If the indicators show, replace the tires.

The tires on your Toyota have built–in tread wear indicators to help you know when the tires need replacement. When the tread depth wears to 1.6 mm (0.06 in.) or less, the indicators will appear. If you can see the indicators in two or more adjacent grooves, the tire should be replaced. The lower the tread, the higher the risk of skidding.

The effectiveness of snow tires is lost if the tread wears down below 4 mm (0.16 in.).

Check the tires regularly for damage such as cuts, splits and cracks. If any damage is found, consult with a technician and have the tire repaired or replaced.

Even if the damage does not appear serious, a qualified technician should examine the damage. Objects which have penetrated the tire may have caused internal damage.

Any tires which are over 6 years old must be checked by a qualified technician even if damage is not obvious.

Tires deteriorate with age even if they have never or seldom been used.

This also applies to the spare tire and tires stored for future use.

REPLACING YOUR TIRES

When replacing a tire, use only the same size and construction as originally installed and with the same or greater load capacity.

Using any other size or type of tire may seriously affect handling, ride, speedometer/odometer calibration, ground clearance, and clearance between the body and tires or snow chains.

CAUTION

- **Do not mix radial, bias belted, or bias–ply tires on your vehicle. It can cause dangerous handling characteristics, resulting in loss of control.**
- **Do not use tires or wheels other than the manufacturer's recommended size.**

Toyota recommends all four tires, or at least both front or rear tires be replaced as a set.

See "If you have a flat tire" in Section 4 for tire change procedure.

When a tire is replaced, the wheel should always be balanced.

An unbalanced wheel may affect vehicle handling and tire life. Wheels can get out of balance with regular use and should therefore be balanced occasionally.

When replacing a tubeless tire, the air valve should also be replaced with a new one.

Rotating tires

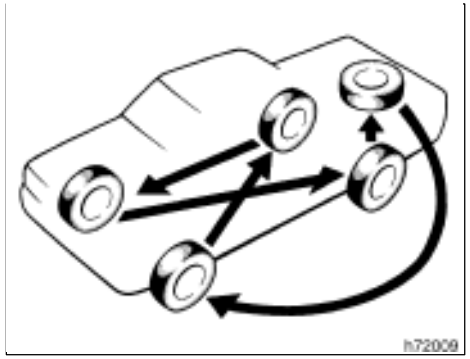

With a spare tire of the same wheel type as the installed tires

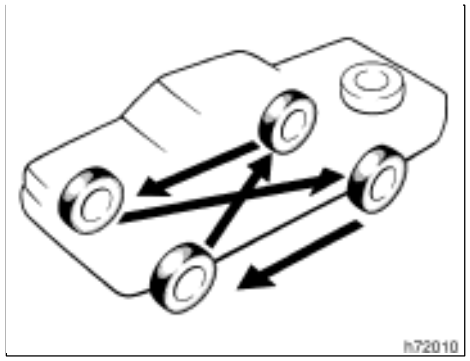

With a spare tire of different wheel type from the installed tires

To equalize tire wear and help extend tire life, Toyota recommends that you rotate your tires approximately every 12000 km (7500 miles). However, the most appropriate timing for tire rotation may vary according to your driving habits and road surface conditions.

See “If you have a flat tire” in Section 4 for tire change procedure.

When rotating tires, check for uneven wear and damage. Abnormal wear is usually caused by incorrect tire pressure, improper wheel alignment, out–of–balance wheels, or severe braking.

Installing snow tires and chains

WHEN TO USE SNOW TIRES OR CHAINS

Snow tires or chains are recommended when driving on snow or ice.

On wet or dry roads, conventional tires provide better traction than snow tires.

SNOW TIRE SELECTION

If you need snow tires, select the same size, construction and load capacity as the original tires on your Toyota.

Do not use tires other than those mentioned above. Do not install studded tires without first checking local regulations for possible restrictions.

SNOW TIRE INSTALLATION

Snow tires should be installed on all wheels.

Installing snow tires on the rear wheels only can lead to an excessive difference in road grip capability between the front and rear tires which could cause loss of vehicle control.

When storing removed tires, you should store them in a cool dry place.

Mark the direction of rotation and be sure to install them in the same direction when replacing.

CAUTION

- **Do not drive with the snow tires incorrectly inflated.**
- **Never drive over 120 km/h (75 mph) with any type of snow tires.**

TIRE CHAIN SELECTION

Use the tire chains of correct size.

Regulations regarding the use of tire chains vary according to location or type of road, so always check them before installing chains.

CHAIN INSTALLATION

Install the chains on the rear tires as tightly as possible. Do not use tire chains on the front tires. Retighten chains after driving 0.5—1.0 km (1/4—1/2 mile).

When installing chains on your tires, carefully follow the instructions of the chain manufacturer.

If wheel covers are used, they will be scratched by the chain band, so remove the covers before putting on the chains.

CAUTION

- **Do not exceed 50 km/h (30 mph) or the chain manufacturer's recommended speed limit, whichever is lower.**
- **Drive carefully avoiding bumps, holes, and sharp turns, which may cause the vehicle to bounce.**
- **Avoid sharp turns or locked–wheel braking, as use of chains may adversely affect vehicle handling.**

Replacing wheels

WHEN TO REPLACE YOUR WHEELS

If you have wheel damage such as bending, cracks or heavy corrosion, the wheel should be replaced.

If you fail to replace damaged wheels, the tire may slip off the wheel or cause loss of handling control.

WHEEL SELECTION

When replacing wheels, care should be taken to ensure that the wheels are replaced by ones with the same load capacity, diameter, rim width, and offset.

Correct replacement wheels are available at your Toyota dealer.

A wheel of a different size or type may adversely affect handling, wheel and bearing life, brake cooling, speedometer/odometer calibration, stopping ability, headlight aim, bumper height, vehicle ground clearance, and tire or snow chain clearance to the body and chassis.

Replacement with used wheels is not recommended as they may have been subjected to rough treatment or high mileage and could fail without warning. Also, bent wheels which have been straightened may have structural damage and therefore should not be used. Never use an inner tube in a leaking wheel which is designed for a tubeless tire.

Aluminum wheel precautions

- After driving your vehicle the first 1600 km (1000 miles), check that the wheel nuts are tight.
- If you have rotated, repaired, or changed your tires, check that the wheel nuts are still tight after driving 1600 km (1000 miles).
- When using tire chains, be careful not to damage the aluminum wheels.
- Use only the Toyota wheel nuts and wrench designed for your aluminum wheels.
- When balancing your wheels, use only Toyota balance weights or equivalent and a plastic or rubber hammer.
- As with any wheel, periodically check your aluminum wheels for damage. If damaged, replace immediately.

SECTION 7–3

DO–IT–YOURSELF MAINTENANCE

Electrical components

Checking battery condition 238
Battery recharging precautions 239
Checking and replacing fuses 240
Adding washer fluid 241
Replacing light bulbs 241

Checking battery condition—
—Precautions

⚠ CAUTION

BATTERY PRECAUTIONS

The battery produces flammable and explosive hydrogen gas.

- **Do not cause a spark from the battery with tools.**
- **Do not smoke or light a match near the battery.**

The electrolyte contains poisonous and corrosive sulfuric acid.

- **Avoid contact with eyes, skin or clothes.**
- **Never ingest electrolyte.**
- **Wear protective safety glasses when working near the battery.**
- **Keep children away from the battery.**

EMERGENCY MEASURES

- **If electrolyte gets in your eyes, flush your eyes with clean water immediately and get immediate medical attention. If possible, continue to apply water with a sponge or cloth while en route to the medical office.**
- **If electrolyte gets on your skin, thoroughly wash the contact area. If you feel pain or burning, get medical attention immediately.**
- **If electrolyte gets on your clothes, there is a possibility of its soaking through to your skin, so immediately take off the exposed clothing and follow the procedure above, if necessary.**
- **If you accidentally swallow electrolyte, drink a large quantity of water or milk. Follow with milk of magnesia, beaten raw egg or vegetable oil. Then go immediately for emergency help.**

—Checking battery exterior

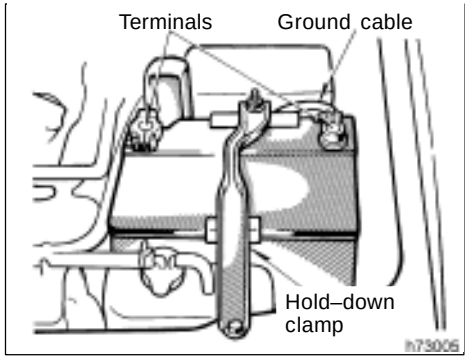

Check the battery for corroded or loose terminal connections, cracks, or loose hold–down clamp.

a. If the battery is corroded, wash it off with a solution of warm water and baking soda. Coat the outside of the terminals with grease to prevent further corrosion.

b. If the terminal connections are loose, tighten their clamp nuts—but do not overtighten.

c. Tighten the hold–down clamp only enough to keep the battery firmly in place. Overtightening may damage the battery case.

NOTICE

- ***Be sure the engine and all accessories are off before performing maintenance.***
- ***When checking the battery, remove the ground cable from the negative terminal ("–" mark) first and reinstall it last.***
- ***Be careful not to cause a short circuit with tools.***
- ***Take care no solution gets into the battery when washing it.***

—Checking battery fluid

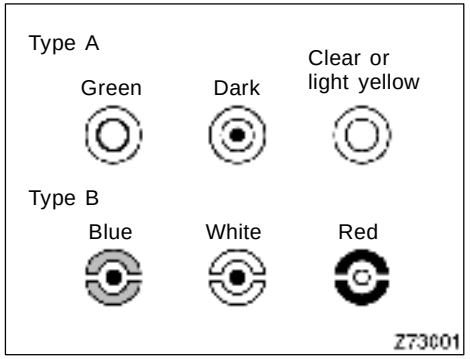

CHECKING BY HYDROMETER

Check the battery condition by the hydrometer color.

Hydrometer color		Condition
Type A	Type B	
GREEN	BLUE	Good
DARK	WHITE	Charging necessary. Have battery checked by your Toyota dealer.
CLEAR or LIGHT YELLOW	RED	Have battery checked by your Toyota dealer.

Battery recharging precautions

During recharging, the battery is producing hydrogen gas.

Therefore, before recharging:

1. If recharging with the battery installed on the vehicle, be sure to disconnect the ground cable.
2. Be sure the power switch on the recharger is off when connecting the charger cables to the battery and when disconnecting them.

CAUTION

- **Always charge the battery in an unconfined area. Do not charge the battery in a garage or closed room where there is not sufficient ventilation.**
- **Only do a slow charge (5 A or less). Charging at a quicker rate is dangerous. The battery may explode, causing personal injuries.**

NOTICE

Never recharge the battery while the engine is running. Also, be sure all accessories are turned off.

Checking and replacing fuses

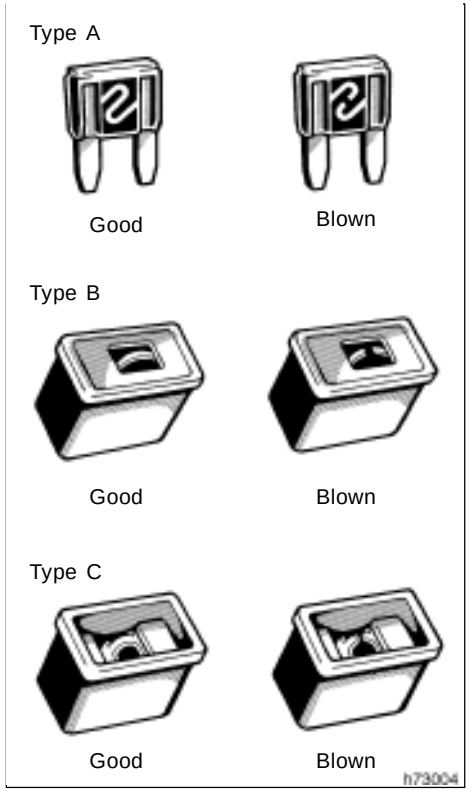

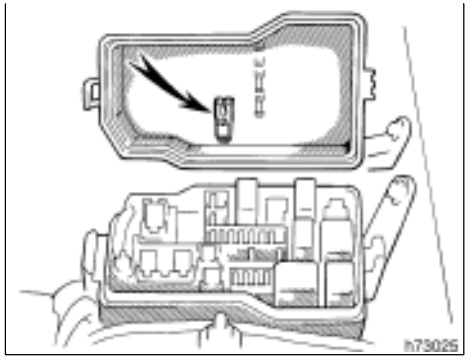

If the headlights or other electrical components do not work, check the fuses. If any of the fuses are blown, they must be replaced.

See "Fuse locations" in Section 7–1 for locations of the fuses.

Turn the ignition switch and inoperative component off. Pull a suspected fuse straight out and check it.

Determine which fuse may be causing the problem. The lid of the fuse box shows the name of the circuit for each fuse. See Section 8 of this manual for the functions controlled by each circuit.

Type A fuses can be pulled out by the pull–out tool. The location of the pull–out tool is shown in the illustration.

If you are not sure whether the fuse has blown, try replacing the suspected fuse with one that you know is good.

If the fuse has blown, push a new fuse into the clip.

Only install a fuse with the amperage rating designated on the fuse box lid.

If you do not have a spare fuse, in an emergency you can pull out the "CIG", "RADIO", "DOME" or "A.C" fuse, which may be dispensable for normal driving, and use it if its amperage rating is the same.

If you cannot use one of the same amperage, use one that is lower, but as close as possible to the rating. If the amperage is lower than that specified, the fuse might blow out again but this does not indicate anything wrong. Be sure to get the correct fuse as soon as possible and return the substitute to its original clip.

It is a good idea to purchase a set of spare fuses and keep them in your vehicle for emergencies.

If the new fuse immediately blows out, there is a problem with the electrical system. Have your Toyota dealer correct it as soon as possible.

CAUTION

Never use a fuse with a higher amperage rating, or any other object, in place of a fuse. This may cause extensive damage and possibly a fire.

Adding washer fluid

If any washer does not work, the washer tank may be empty. Add washer fluid.

You may use plain water as washer fluid. However, in cold areas where temperatures range below freezing point, use washer fluid containing antifreeze. This product is available at your Toyota dealer and most auto parts stores. Follow the manufacturer's directions for how much to mix with water.

NOTICE

Do not use engine antifreeze or any other substitute because it may damage your vehicle's paint.

Replacing light bulbs—

The following illustrations show how to gain access to the bulbs. When replacing a bulb, make sure the ignition switch and light switch are off. Use bulbs with the wattage ratings given in the table.

CAUTION

Halogen bulbs have pressurized gas inside and require special handling. They can burst or shatter if scratched or dropped. Hold a bulb only by its plastic or metal case. Do not touch the glass part of a bulb with bare hands.

NOTICE

Only use a bulb of the listed type.

Light bulbs	Bulb No.	W	Type
Headlights	HB2	60/55	A
Parking lights	168	5	C
Front turn signal lights	1156	27	B
Rear turn signal lights	1156	27	B
Stop and tail lights	1157	27/8	B
Back–up lights	1156	27	B
License plate lights	194	3.8	C
High mounted stoplight	168	5	C
Interior light Normal cab Xtra–cab	 — —	 5 10	D
Personal lights	—	5	D
Door courtesy lights	—	3	D
Glove box light	—	1.4	C

A: HB2 halogen bulbs
B: Single end bulbs
C: Wedge base bulbs
D: Double end bulbs

—Headlights

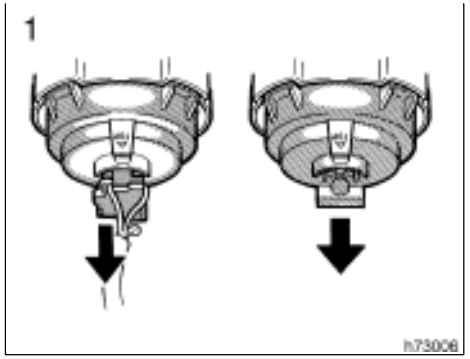

1. Open the hood. Unplug the connector. Remove the rubber cover.

If the connector is tight, wiggle it.

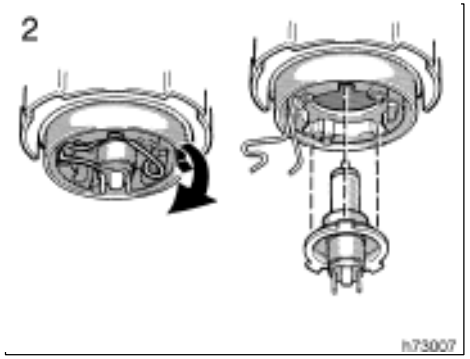

2. Release the bulb retaining spring and remove the bulb. Install a new bulb and the bulb retaining spring.

To install a bulb, align the tabs of the bulb with the cutouts of the mounting hole.

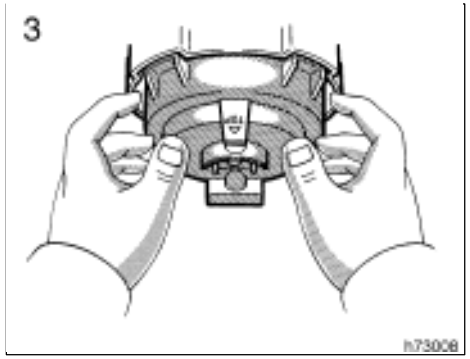

3. Install the rubber cover with the “TOP” mark upward and snuggle on the boss. Then insert the connector.

Make sure the rubber cover fits snugly on the connector and the headlight body.

Aiming is not necessary after replacing the bulb. When aiming adjustment is necessary, contact your Toyota dealer.

—Parking lights

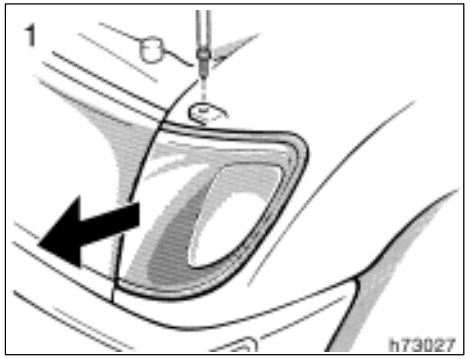

Use a Phillips–head screwdriver.

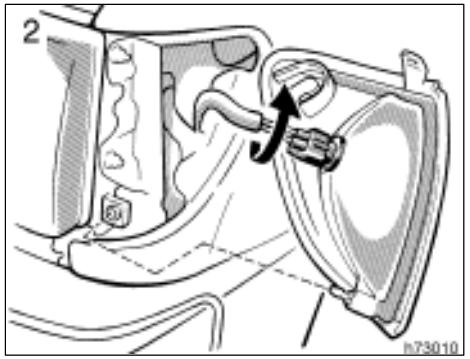

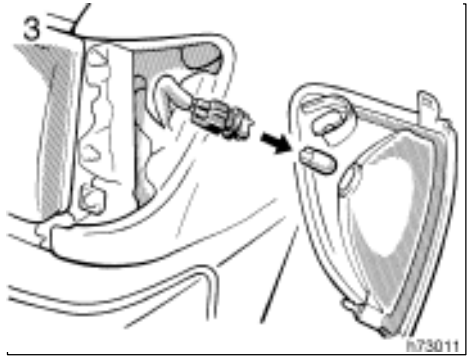

—Front turn signal lights (two–wheel drive models except Pre Runner)

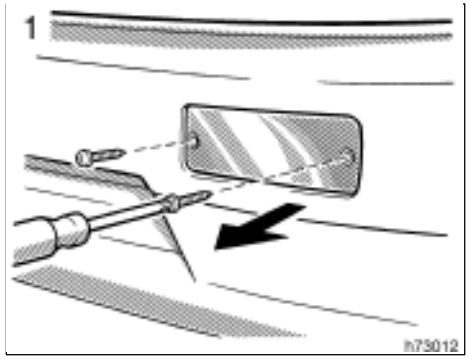

Use a Phillips–head screwdriver.

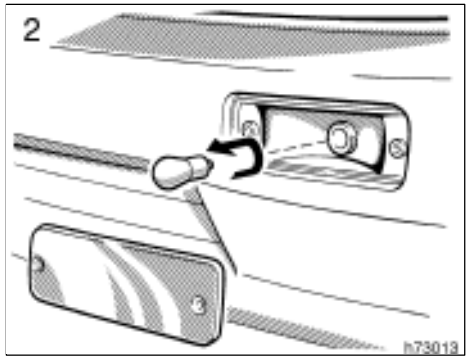

—Front turn signal lights (four–wheel drive models and Pre Runner)

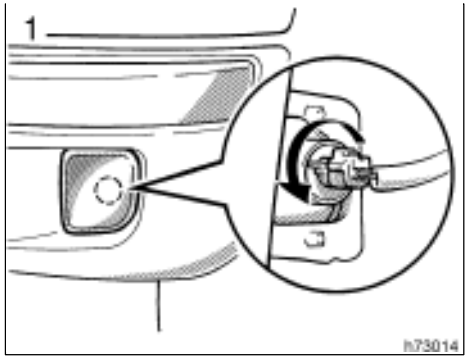

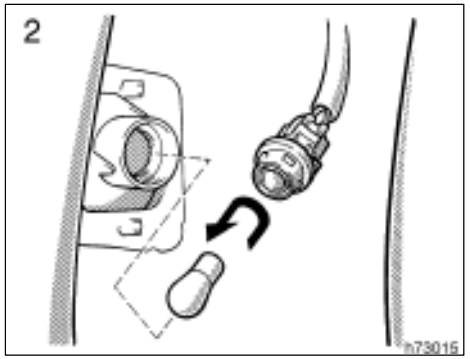

—Rear turn signal, stop and tail, and back–up lights

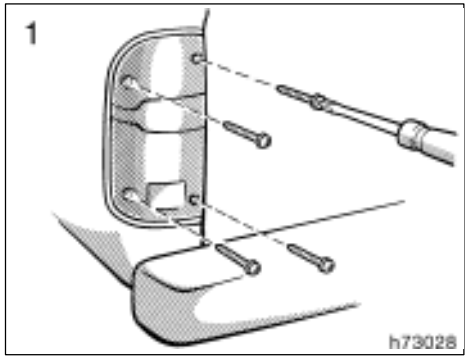

Use a Phillips–head screwdriver.

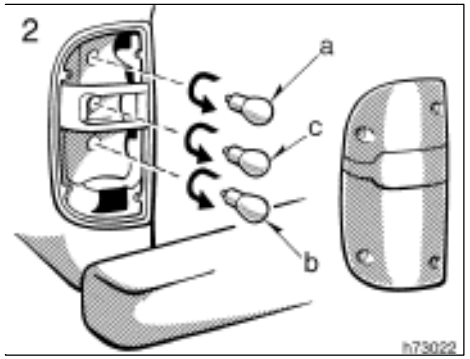

a: Rear turn signal light c: Back–up light
b: Stop and tail light

—License plate lights (type A)

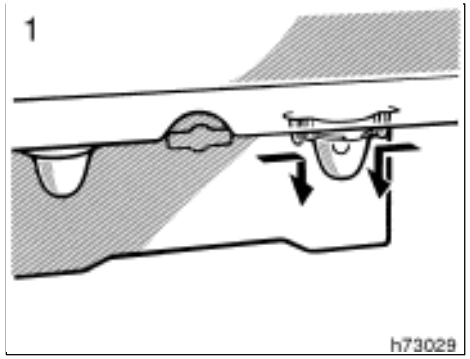

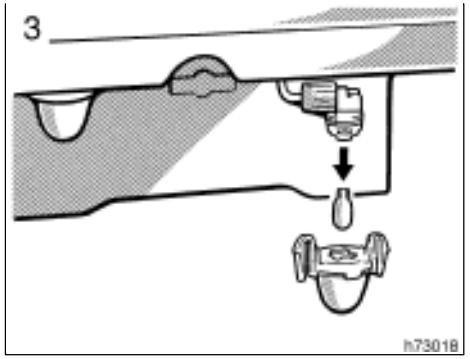

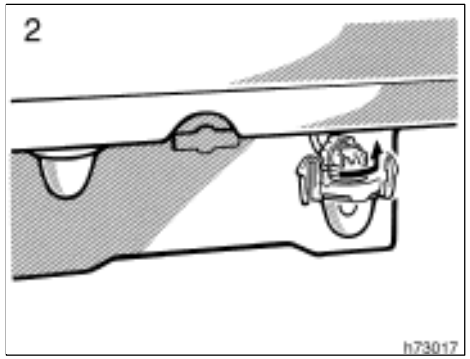

—License plate lights (type B)

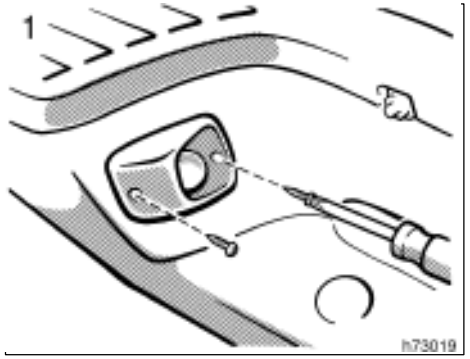

Use a Phillips–head screwdriver.

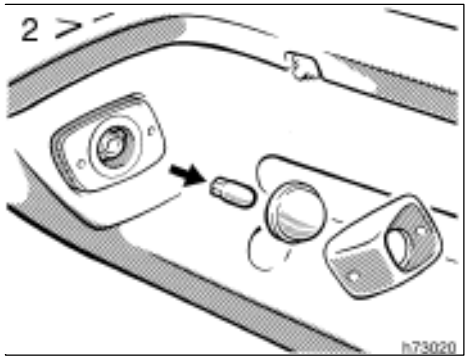

—High mounted stoplight

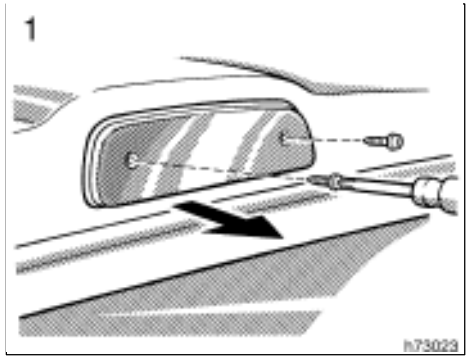

Use a Phillips–head screwdriver.

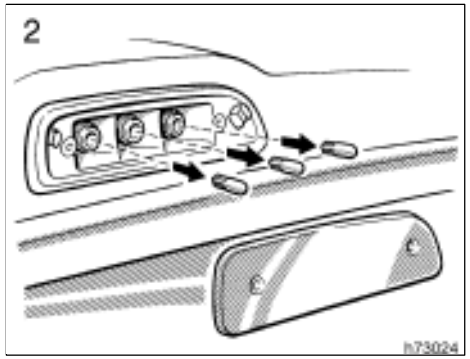

SECTION 8

SPECIFICATIONS

Dimensions and weight 248
Engine 249
Fuel 250
Service specifications 250
Tires 254
Fuses 254

Dimensions and weight

TWO–WHEEL DRIVE MODELS EXCEPT PRE RUNNER

		Normal cab models	Xtra–cab models
Overall length	mm (in.)	4540 (178.7)*1 4690 (184.6)*2	5010 (197.2)*1 5155 (203.0)*2
Overall width	mm (in.)	1690 (66.5)	1690 (66.5)
Overall height*5	mm (in.)	1575 (62.0)*3 1580 (62.2)	1580 (62.2)*4
Wheelbase	mm (in.)	2625 (103.3)	3095 (121.9)
Front tread	mm (in.)	1395 (54.9)*3 1425 (56.1)*4	1425 (56.1)
Rear tread	mm (in.)	1415 (55.7)*3 1440 (56.7)*4	1440 (56.7)
Cargo weight rating	kg (lb.)	500 (1100)*6 430 (950)*7	500 (1100)*6 430 (950)*7 295 (650)*8

*1: Without rear step bumper
*2: With rear step bumper
*3: With P195/75R14 tires
*4: With P215/70R14 tires
*5: Unladen vehicle
*6: With 1 or 2 occupants
*7: With 3 occupants
*8: With 5 occupants

FOUR–WHEEL DRIVE MODELS AND PRE RUNNER

		Normal cab models	Xtra–cab models
Overall length	mm (in.)	4665 (183.7)	5135 (202.2)
Overall width	mm (in.)	1690 (66.5)*1 1720 (67.7)*2 1765 (69.5)*3	1690 (66.5)*1 1720 (67.7)*2 1765 (69.5)*3
Overall height*4	mm (in.)	1715 (67.5)*1 1745 (68.7)*2	1720 (62.7)*1 1750 (68.9)*2
Wheelbase	mm (in.)	2625 (103.3)	3095 (121.9)
Front tread	mm (in.)	1460 (57.5)*5 1500 (59.1)*6	1460 (57.5)*7 1500 (59.1)*8
Rear tread	mm (in.)	1455 (57.3)*7 1495 (58.9)*8	1455 (57.3)*7 1495 (58.9)*8
Cargo weight rating	kg (lb.)	500 (1100)	500 (1100)*9 317 (700)*10

*1: With P225/75R15 tires
*2: With P265/75R15 tires or with 31 × 10.5R15LT tires
*3: With wheel opening extension
*4: Unladen vehicle
*5: With steel wheels plus P225/75R15 tires
*6: With steel wheels plus P265/75R15 tires or with aluminum wheels
*7: With steel wheels
*8: With aluminum wheels
*9: With 3 occupants
*10: With 5 occupants

Engine

Model:
2RZ–FE, 3RZ–FE and 5VZ–FE

Type:

2RZ–FE and 3RZ–FE engine
4 cylinder in line, 4 cycle, gasoline

5VZ–FE engine
6 cylinder V type, 4 cycle, gasoline

Bore and stroke, mm (in.):

2RZ–FE engine
95.0 × 86.0 (3.74 × 3.39)

3RZ–FE engine
95.0 × 95.0 (3.74 × 3.74)

5VZ–FE engine
93.5 × 82.0 (3.68 × 3.23)

Displacement, cm^3 (cu. in.):

2RZ–FE engine	2438 (148.8)
3RZ–FE engine	2694 (164.3)
5VZ–FE engine	3378 (206.1)

Fuel

Fuel type:
Unleaded gasoline, Octane Rating 87 (Research Octane Number 91) or higher

Fuel tank capacity, L (gal., Imp. gal.):

Two–wheel drive models except Pre Runner
57 (15.1, 12.5)

Four–wheel drive models and Pre Runner
68 (18.0, 15.0)

Service specifications

ENGINE

Valve clearance (engine cold), mm (in.):

2RZ–FE and 3RZ–FE engines		
Intake	0.15—0.25	(0.006—0.010)
Exhaust	0.25—0.35	(0.010—0.014)
5VZ–FE engine		
Intake	0.13—0.23	(0.006—0.009)
Exhaust	0.27—0.37	(0.011—0.014)

Spark plug type:

2RZ–FE and 3RZ–FE engines	
Except LEV*	
DENSO	K16R–U
NGK	BKR5EYA
LEV*	
DENSO	K16R–U11
NGK	BKR5EYA–11
5VZ–FE engine	
DENSO	K16TR11
NGK	BKR5EKB11

*: See “—Exhaust emission label” on page 159 for details.

Spark plug gap, mm (in.):

2RZ–FE and 3RZ–FE engines		
Except LEV*	0.8	(0.031)
LEV*	1.1	(0.043)
5VZ–FE engine	1.1	(0.043)

*: See “—Exhaust emission label” on page 159 for details.

Drive belt tension measured with Borroughs drive belt tension gauge No. BT–33–73F (used belt), lbf:

2RZ–FE and 3RZ–FE engines	
Generator belt	115 ± 20
Air conditioning compressor belt	100 ± 20
Power steering pump belt	100 $^{+20}_{-15}$
5VZ–FE engine	
Generator belt	100 ± 20
Air conditioning compressor belt	100 ± 20
Power steering pump belt	100 $^{+20}_{-15}$

ENGINE LUBRICATION

Oil capacity (drain and refill), L (qt., Imp. qt.):

Two–wheel drive models except Pre Runner

2RZ–FE engine

With filter	5.5 (5.8, 4.8)
Without filter	4.8 (5.0, 4.2)

5VZ–FE engine

With filter	5.4 (5.7, 4.8)
Without filter	5.1 (5.4, 4.5)

Four–wheel drive models and Pre Runner

3RZ–FE engine

With filter	5.4 (5.7, 4.8)
Without filter	4.7 (5.0, 4.1)

5VZ–FE engine

With filter	5.2 (5.5, 4.6)
Without filter	4.9 (5.2, 4.3)

Oil grade:

API grade SJ, “Energy–Conserving” or ILSAC multigrade engine oil is recommended.

Recommended oil viscosity (SAE):

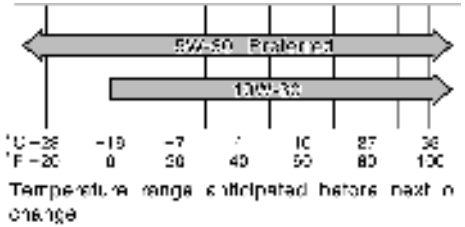

Temperature range anticipated before next oil change

OIL05U

COOLING SYSTEM

Total capacity, L (qt., Imp. qt.):

Two–wheel drive models except Pre Runner

With manual transmission

2RZ–FE engine	8.0 (8.5, 7.0)
5VZ–FE engine	9.7 (10.3, 8.5)

With automatic transmission

2RZ–FE engine	7.8 (8.2, 6.9)
5VZ–FE engine	9.5 (10.0, 8.4)

Four–wheel drive models and Pre Runner

With manual transmission

3RZ–FE engine	8.3 (8.8, 7.3)
5VZ–FE engine	10.1 (10.7, 8.9)

With automatic transmission

3RZ–FE engine	8.2 (8.7, 7.2)
5VZ–FE engine	10.0 (10.5, 8.8)

Coolant type:

“TOYOTA Long Life Coolant” or equivalent

With ethylene–glycol type coolant for a proper corrosion protection of aluminum components

Do not use alcohol type antifreeze or plain water alone.

BATTERY

Open voltage* at 20°C (68°F):

12.6—12.8 V	Fully charged
12.2—12.4 V	Half charged
11.8—12.0 V	Discharged

*: Voltage that is checked 20 minutes after the key is removed with all the lights turned off

Charging rates:

5 A max.

CLUTCH

Pedal free play, mm (in.):
5—15 (0.2—0.6)

Fluid type:
SAE J1703 or FMVSS No.116 DOT 3

MANUAL TRANSMISSION

Oil capacity, L (qt., Imp. qt.):

2RZ–FE engine	2.6 (2.7, 2.3)
3RZ–FE engine	2.5 (2.6, 2.2)
5VZ–FE engine	
Two–wheel drive models	2.6 (2.7, 2.3)
Four–wheel drive models	2.2 (2.3, 1.9)

Oil type:
Gear Oil API GL–4 or GL–5

Recommended oil viscosity:
SAE 75W–90

AUTOMATIC TRANSMISSION

Fluid capacity (drain and refill), L (qt., Imp. qt.):

Two–wheel drive models

2RZ–FE engine
Up to 2.4 (2.5, 2.1)

5VZ–FE and 3RZ–FE engines
Up to 1.6 (1.7, 1.4)

Four–wheel drive models
Up to 2.0 (2.1, 1.8)

Fluid type:
Automatic transmission fluid D–II or DEXRON®III (DEXRON®II)

TRANSFER

Oil capacity, L (qt., Imp. qt.):
1.0 (1.1, 0.9)

Oil type:
Gear Oil API GL–4 or GL–5

Recommended oil viscosity:
SAE 75W–90

DIFFERENTIAL

Oil capacity, L (qt., Imp. qt.):

Two–wheel drive models except Pre Runner

2RZ–FE engine	1.35 (1.4, 1.2)
5VZ–FE engine	2.55 (2.7, 2.2)

Four–wheel drive models and Pre Runner

Front (except Pre Runner)

A.D.D.	1.15 (1.2, 1.0)
Except A.D.D.	1.1 (1.2, 1.0)

Rear

Short wheel base
With rear differential lock system
2.65 (2.8, 2.3)
Without rear differential lock system
2.55 (2.7, 2.2)

Extra long wheel base
With rear differential lock system
2.95 (3.1, 2.6)
Without rear differential lock system
2.45 (2.6, 2.2)

Oil type:
Hypoid Gear Oil API GL–5

Recommended oil viscosity:

Front

A.D.D.
SAE 75W–90

Except A.D.D.
Above –18°C (0°F)
SAE 90
Below –18°C (0°F)
SAE 80W or 80W–90

Rear
Above –18°C (0°F)
SAE 90
Below –18°C (0°F)
SAE 80W or 80W–90

CHASSIS LUBRICATION

Wheel bearings:
Lithium base wheel bearing grease, NLGI No.2

Front drive shaft thrust bushings:
Synthetic oil and lithium soap base chassis grease, NLGI No.1

Propeller shafts:
Spiders
Lithium base chassis grease, NLGI No.2
Slide yoke and double cardan joint
Molybdenum–disulfide lithium base chassis grease, NLGI No.2

BRAKES

Minimum pedal clearance when depressed with the pressure of 490 N (50 kgf, 110 lbf) with the engine running, mm (in.):
72 (2.8)

Pedal free play, mm (in.):
3—6 (0.12—0.24)

Pad wear limit, mm (in.):
1.0 (0.04)

Lining wear limit, mm (in.):
1.0 (0.04)

Parking brake adjustment when pulled with the force of 196 N (20 kgf, 44 lbf):
12—18 clicks

Fluid type:
SAE J1703 or FMVSS No.116 DOT 3

STEERING

Wheel free play:
Less than 30 mm (1.2 in.)

Power steering fluid type:
Automatic transmission fluid DEXRON®II or III

Tires

Tire size	Tire pressure kPa (kgf/cm^2 or bar, psi)		Wheel size
	Front	Rear	
P195/75R14	200 (2.0, 29)	240 (2.4, 35)	14 × 5J
P215/70R14	200 (2.0, 29)	200 (2.0, 29)	14 × 6J 14 × 6JJ
P225/75R15	180 (1.8, 26)	200 (2.0, 29)	15 × 6J 15 × 7J 15 × 7JJ
P265/75R15	180 (1.8, 26)	180 (1.8, 26)	15 × 7J 15 × 7JJ
31x10.5R15LT	180 (1.8, 26)	200 (2.0, 29)	15 × 7J 15 × 7JJ

Wheel nut torque, N·m (kgf·m, ft·lbf):
110 (11.5, 83)

Fuses

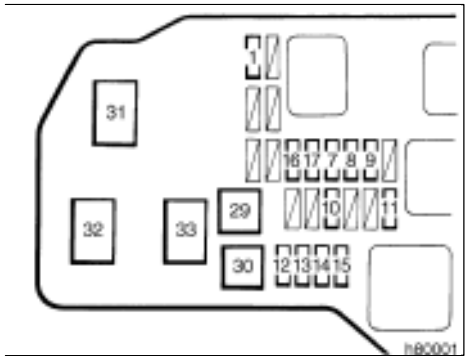

Engine compartment (without daytime running light system)

Fuses (type A)

1. **PWR OUTLET 15 A:** Power outlet
2. **DRL 7.5 A:** Daytime running light system
3. **HEAD (HI RH) 10 A:** Right–hand headlight (high beam), high beam indicator light
4. **HEAD (HI LH) 10 A:** Left–hand headlight (high beam)
5. **HEAD (LO RH) 10 A:** Right–hand headlight (low beam)

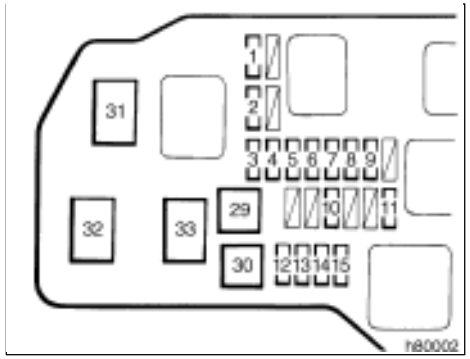

Engine compartment (with daytime running light system)

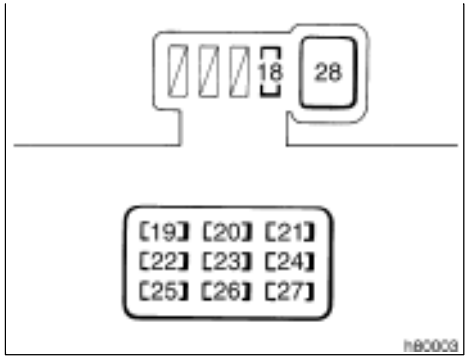

Instrument panel

6. **HEAD (LO LH) 10 A:** Left–hand headlight (low beam)
7. **TAIL 10 A:** Tail lights, licence plate lights
8. **PANEL 10 A:** Emergency flashers, heater control system, air conditioning system, gauges and meters, clock, car audio system, overdrive indicator light, glove box light, cigarette lighter, instrument panel lights, rear differential lock system, Multiport fuel injection system/ sequential multiport fuel injection system, electronically controlled automatic transmission system
9. **A.C 10 A:** Air conditioning system
10. **STOP 15 A:** Stop lights, high mounted stoplight, cruise control system
11. **ALT–S 7.5 A:** Charging system
12. **DOME 15 A:** Car audio system, power antenna, interior light, clock, ignition switch light, personal lights, door courtesy lights
13. **OBD 10 A:** On–board diagnosis system
14. **HORN 15 A:** Emergency flashers, horns
15. **EFI 20 A:** Multiport fuel injection system/sequential multiport fuel injection system
16. **HEAD (RH) 10 A:** Right–hand headlight
17. **HEAD (LH) 10 A:** Left–hand headlight
18. **STA 7.5 A:** Clutch start cancel system, starting system, gauges and meters
19. **4WD 20 A:** A.D.D. control system, four–wheel drive control system, rear differential lock system
20. **GAUGE 10 A:** Gauges and meters, back–up lights, cruise control system, power antenna, power door lock control system, electronically controlled automatic transmission system, starting system, charging system, air conditioning system
21. **TURN 10 A:** Turn signal lights, emergency flashers
22. **ECU–IG 15 A:** Cruise control system, anti–lock brake system, automatic transmission shift lock system
23. **WIPER 20 A:** Windshield wipers and washer
24. **IGN 7.5 A:** Discharge warning light, SRS airbag system, seat belt pretensioners, multiport fuel injection system/ sequential multiport fuel injection system

25. **RADIO 7.5 A:** Car audio system, power antenna
26. **CIG 15 A:** Cigarette lighter, clock, power rear view mirrors, back–up lights, automatic transmission shift lock system, SRS airbag system, seat belt pretensioners
27. **ECU–B 15 A:** SRS warning light, daytime running light system, cruise control system, SRS airbag system, seat belt pretensioners

Fuses (type B)

28. **POWER 30 A:** Power windows
29. **AM1 40 A:** Starting system
30. **AM2 30 A:** Ignition system

Fuses (type C)

31. **ABS 60 A:** Anti–lock brake system
32. **HEATER 40 A:** “A.C” fuse
33. **ALT 120 A:** “ABS”, “AM1”, “HEATER”, “A.C”, “TAIL”, “PANEL”, “STOP” and “ALT–S”, “PWR OUTLET” fuses

SECTION 9

REPORTING SAFETY DEFECTS FOR U.S. OWNERS, UNIFORM TIRE QUALITY GRADING AND CAMPER INFORMATION

Reporting safety defects for U.S. owners 258
Uniform tire quality grading 258
Camper information 259

Reporting safety defects for U.S. owners

If you believe that your vehicle has a defect which could cause a crash or could cause injury or death, you should immediately inform the National Highway Traffic Safety Administration (NHTSA) in addition to notifying Toyota Motor Sales, U.S.A., Inc. (Toll–free: 1–800–331–4331).

If NHTSA receives similar complaints, it may open an investigation, and if it finds that a safety defect exists in a group of vehicles, it may order a recall and remedy campaign. However, NHTSA cannot become involved in individual problems between you, your dealer, or Toyota Motor Sales, U.S.A., Inc.

To contact NHTSA, you may either call the Auto Safety Hotline toll–free at 1–800–424–9393 (or 366–0123 in Washington, D.C. area) or write to: NHTSA. U.S.Department of Transportation. Washington, D.C. 20590. You can also obtain other information about motor vehicle safety from the Hotline.

Uniform tire quality grading (except vehicles with 31 × 10.5R15LT tires)

This information has been prepared in accordance with regulations issued by the National Highway Traffic Safety Administration of the U.S. Department of Transportation. It provides the purchasers and/or prospective purchasers of Toyota vehicles with information on uniform tire quality grading.

Your Toyota dealer will help answer any questions you may have as you read this information.

DOT quality grades—All passenger vehicle tires must conform to Federal Safety Requirements in addition to these grades. These quality grades are molded on the sidewall.

Treadwear—The treadwear grade is a comparative rating based on the wear rate of the tire when tested under controlled conditions on a specified government test course. For example, a tire graded 150 would wear one and a half (1–1/2) times as well on the government course as a tire graded 100. The relative performance of tires depends upon the actual conditions of their use, however, and may depart significantly from the norm due to variations in driving habits, service practices and differences in road characteristics and climate.

Traction AA, A, B, C—The traction grades, from highest to lowest, are AA, A, B, and C, and they represent the tire’s ability to stop on wet pavement as measured under controlled conditions on specified government test surfaces of asphalt and concrete. A tire marked C may have poor traction performance.

Warning: The traction grade assigned to this tire is based on braking (straight ahead) traction tests and does not include cornering (turning) traction.

Temperature A, B, C—The temperature grades are A (the highest), B, and C, representing the tire’s resistance to the generation of heat and its ability to dissipate heat when tested under controlled conditions on a specified indoor laboratory test wheel. Sustained high temperature can cause the material of the tire to degenerate and reduce tire life, and excessive temperature can lead to sudden tire failure. The grade C corresponds to a level of performance which all passenger car tires must meet under the Federal Motor Vehicle Safety Standard No.109. Grades B and A represent higher levels of performance on the laboratory test wheel than the minimum required by law.

Warning: The temperature grades for this tire are established for a tire that is properly inflated and not overloaded. Excessive speed, underinflation, or excessive loading, either separately or in combination, can cause heat buildup and possible tire failure.

Camper information—

This information has been prepared in accordance with regulation issued by the National Highway Traffic Safety Administration of the U.S. Department of Transportation. It provides the purchasers and/or prospective purchasers of Toyota vehicles with information on truck–camper loading. Your Toyota dealer will help answer any questions you may have as you read this information.

—Center of gravity location

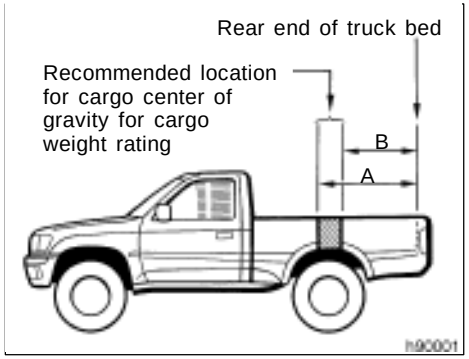

Two–wheel drive models except Pre Runner mm (in.)

	A	B
Normal cab models	1397 (55.0)	838 (33.0)
Xtra–cab models		
2RZ–FE engine	1397 (55.0)	1016 (40.0)
5VZ–FE engine	1193 (47.0)	1066 (42.0)

Four–wheel drive models and Pre Runner mm (in.)

A	B
1397 (55.0)	838 (33.0)

The figures given in the illustration indicate the recommended center of gravity zone.

CAUTION

If a load is too far back, it can cause dangerous handling. If it is too far forward, the front axle may be overloaded.

—Cargo weight rating and proper matching

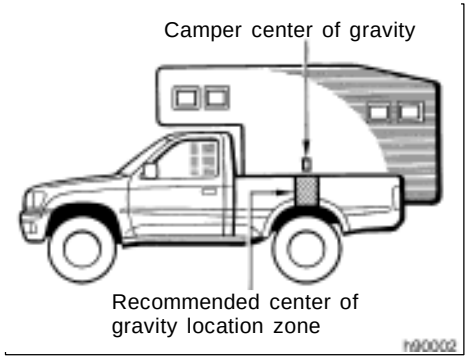

Cargo weight rating

Two–wheel drive models except Pre Runner

Normal cab models

With 2 occupants

499 kg (1100 lb.)

With 3 occupants

431 kg (950 lb.)

Xtra–cab models

With 2 occupants in the front seats and no occupants in the rear seats

499 kg (1100 lb.)

With 3 occupants in the front seats and no occupants in the rear seats

431 kg (950 lb.)

With 3 occupants in the front seats and 2 occupants in the rear seats

295 kg (650 lb.)

Four–wheel drive models and Pre Runner

Normal cab models

With 2 or 3 occupants

499 kg (1100 lb.)

Xtra–cab models

Vehicles with off road package

With 2 occupants in the front seats and no occupants in the rear seats

340 kg (750 lb.)

With 3 occupants in the front seats and no occupants in the rear seats

272 kg(600 lb.)

With 3 occupants in the front seats and 2 occupants in the rear seats

136 kg 300 lb.)

Vehicles without off road package

With 2 or 3 occupants in the front seats and no occupants in the rear seats

499 kg (1100 lb.)

With 3 occupants in the front seats and 2 occupants in the rear seats

318 kg (700 lb.)

When the truck is used to carry a slide–in camper, the total cargo load of the truck consists of the manufacturer’s camper weight figure, the weight of installed additional camper equipment not included in the manufacturer’s camper weight figure, the weight of camper cargo, and the weight of passengers in the camper.

The total cargo load should not exceed the truck’s cargo weight rating and the camper’s center of gravity should fall within the truck’s recommended center of gravity zone when installed.

CAUTION

Be careful—overloading can cause dangerous braking and handling problems, and can damage your vehicle and its tires.

—Gross axle and vehicle weight ratings

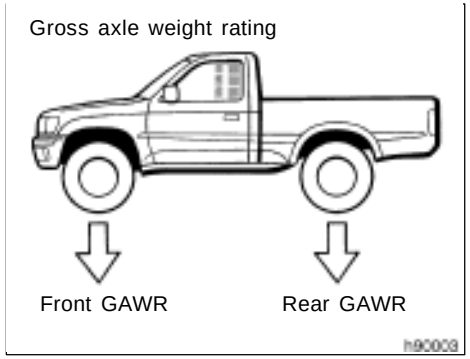

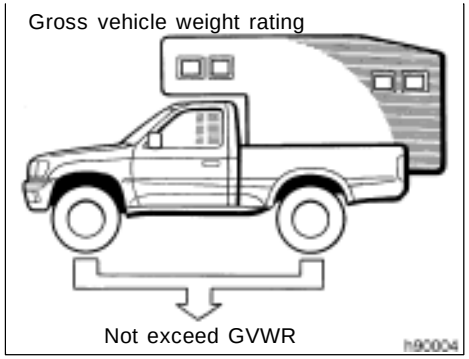

Secure loose items to prevent weight shifts that could affect the balance of your vehicle. When the truck camper is loaded, drive to a scale and weigh on the front and on the rear wheels separately to determine axle loads. Individual axle loads should not exceed either of the Gross Axle Weight Ratings (GAWR). The total of the axle loads should not exceed the Gross Vehicle Weight Rating (GVWR). These raitings are given on the vehicle Certification Label which is located on the door latch post on the left side of the vehicle. See “Your Toyota’s identification” in Section 2 for the Certification Label location. If weight raitings are exceeded, move or remove items to bring all weights below the raitings.

GAWR

Two–wheel drive models except Pre Runner

Front	**1000 kg(2200 lb.)**
Rear	**1135 kg(2500 lb.)**

Four–wheel drive models and Pre Runner

Front	**1200 kg(2650 lb.)**
Rear	**1270 kg(2800 lb.)**

GVWR

Two–wheel drive models except Pre Runner

Normal cab models

1920 kg (4250 lb.)

Xtra–cab models

2040 kg (4500 lb.)

Four–wheel drive models and Pre Runner

2315 kg (5100 lb.)

If weight ratings are exceeded, move or remove items to bring all weights below the ratings.

2000

Scheduled Maintenance Guide







Revised 1/00

TOYOTA

INTRODUCTION

The Importance of Scheduled Maintenance 2
Maintenance and Toyota Warranty Coverage 3

TOYOTA MAINTENANCE & REPAIR SUPPORT

Toyota Dealership Service 4
Toyota Express Lube 5
Genuine Toyota Parts and Accessories 6
Lifetime Guarantee Replacement Parts 8
TrueStart™ Batteries 9
Collision Repair Parts 10
Do-It-Yourself Products 12
Toyota Parts Centers 14
Toyota Service Manuals 15
Service Agreements and Pre-Paid Maintenance 16

SCHEDULED MAINTENANCE LOGS

Determining Your Vehicle's Maintenance Needs 17
Explanation of Maintenance Items 20
Maintenance Log: Cars and Sienna 24
Maintenance Log: SUVs and Trucks 40
Vehicle Identification 56

The Importance of Scheduled Maintenance

Regular maintenance is essential to obtaining the highest level of performance, safety and reliability from your Toyota. It can also enhance your vehicle's resale value. This booklet is designed to help you make sure your vehicle receives proper and timely maintenance. It includes factory-recommended maintenance guidelines along with information on the extensive maintenance and repair support available through Toyota and your dealership. You'll also find space to document your vehicle's maintenance history.

In addition to scheduled maintenance, your Toyota requires ongoing general maintenance which includes checking fluid levels and making periodic visual inspections. These items are explained under the "General Maintenance" heading in the "Vehicle Maintenance and Care" section of the *Owner's Manual*. Be sure to follow these guidelines carefully to ensure the most trouble-free operation of your vehicle.

With proper maintenance and care, your vehicle will last longer and deliver more dependable, economical performance. Follow this booklet's recommendations and you'll enjoy maximum reliability and peace of mind from your Toyota for many years to come.

TOYOTA | everyday

Maintaining your vehicle according to the recommendations in this booklet is required to ensure that your warranty coverage remains in force. You should keep detailed records of vehicle maintenance, including date of service, mileage at time of service and a description of service and/or parts installation performed. The Scheduled Maintenance Log in this booklet is a good place to record this information. If you sell your vehicle, be sure to give your maintenance records to the new owner.

Toyota will not deny a warranty claim solely because you do not have records to show that you maintained your vehicle. However, damage or failures caused by lack of proper maintenance are not covered under warranty.

Maintenance and repair services may be performed by you or by any automotive service provider you choose. Toyota will not deny a warranty claim solely because you used a service provider other than a Toyota dealership for maintenance and repairs. However, damage or failures caused by improper maintenance or repairs are not covered under warranty.

Your dealer may recommend more frequent maintenance intervals or more maintenance services than those listed in the Scheduled Maintenance Log. These additional services are not required to maintain your warranty coverage. Ask your dealer for an explanation of any recommended maintenance not included in the Scheduled Maintenance Log.

For a complete description of Toyota warranty coverages, see the booklet entitled *2000 Owner's Warranty Information* in your vehicle's glove box.

Toyota Dealership Service

To ensure that your vehicle receives first-quality service and factory-authorized parts, Toyota recommends having maintenance performed by an authorized Toyota dealership.

Toyota dealership technicians are experts in the maintenance and repair of Toyota vehicles. They stay current on the latest service information through Toyota technical bulletins, service publications and training courses. Many are also certified through the Toyota Certified Technician Program, which requires completion of Toyota's specialized, state-of-the-art training as well as rigorous exams through both Toyota and the National Institute for Automotive Service Excellence. Feel free to ask any Toyota dealership to show you its technicians' credentials.

You can be confident you're getting the best possible service for your vehicle when you take it to a Toyota dealership. Why trust your investment to anything but a team of highly qualified Toyota specialists?

TOYOTA CERTIFIED TECHNICIAN PROGRAM

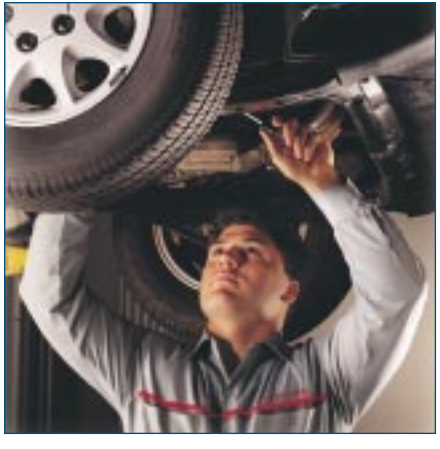

With Toyota Express Lube, you get the convenience of a quick-lube shop *and* the quality and expertise you count on when you go to a Toyota dealership. You also get the Express Lube guarantee: in 29 minutes or less from the time of write-up, a complete oil-and-filter change using Genuine Toyota Parts along with a multi-point inspection, or the next one is free.

You never need an appointment to use Express Lube at a Toyota dealership. You'll be waited on promptly and your oil-and-filter change will be done while you wait. Express Lube also delivers outstanding value, since the service is priced very competitively with franchised quick-lube centers.

More than 450 Toyota dealerships now offer Express Lube service. Call (800) 331-4331 for the Express Lube location nearest you.



TOYOTA
EXPRESS LUBE

Genuine Toyota Parts & Accessories

To safeguard the quality, reliability and value of your vehicle, Toyota recommends using only Genuine Toyota Parts for maintenance and repairs. Like all Toyota products, Genuine Toyota Parts are built to the highest standards of quality and performance. They are also designed to fit your vehicle's exact specifications.

Your Toyota dealership maintains an extensive inventory of Genuine Toyota Parts to meet your vehicle service needs. And because it is linked electronically to Toyota's Parts Distribution Centers, the dealership has quick access to any parts it may not have in stock.

When installed by a Toyota dealership, Genuine Toyota Parts are warranted for 12 months (regardless of mileage) or the remainder of any applicable New Vehicle Limited Warranty, whichever is longer. Selected Toyota replacement parts are covered by a lifetime warranty (see page 8). Non-Genuine Toyota Parts — and any damage or failures resulting from their use — are not covered by any Toyota warranty.

For all your maintenance and repair needs, insist on the quality and peace of mind you only get with Genuine Toyota Parts.



TOYOTA
GENUINE PARTS

When you want to personalize your Toyota vehicle, be sure to do it without sacrificing Toyota quality and performance. How? By choosing Genuine Toyota Accessories.

Only Genuine Toyota Accessories are designed and manufactured specifically for Toyota vehicles. In addition, they undergo rigorous testing to ensure first-rate quality, precise fit and long-term durability. Aftermarket accessories don't always meet these same high standards.

The quality of Genuine Toyota Accessories is also backed by the integrity of a Toyota warranty. Coverage is for 12 months from date of purchase, regardless of mileage. If the accessory is installed at the time of new-vehicle purchase, coverage is extended to 36 months/36,000 miles. See your dealer for details. And remember that Genuine Toyota Accessories can only be purchased from an authorized Toyota dealership.

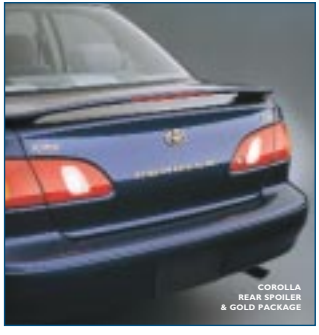
COROLLA
REAR SPOILER
& GOLD PACKAGE


ALLOY WHEELS

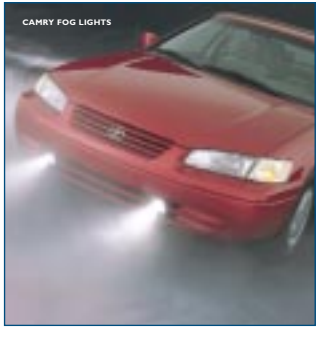
CAMRY FOG LIGHTS

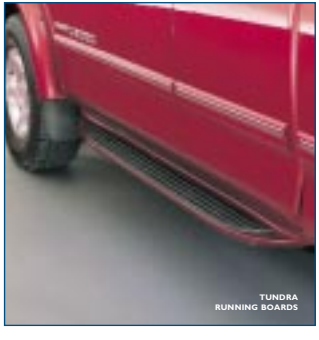
TUNDRA
RUNNING BOARDS

Lifetime Guarantee Replacement Parts

Toyota's confidence in its products and commitment to customer satisfaction are demonstrated by outstanding warranty coverage — including a lifetime guarantee on replacement mufflers, exhaust pipes, shock absorbers, struts and strut cartridges. When purchased at and installed by a Toyota dealership, these Genuine Toyota Parts are guaranteed to the original purchaser for the life of the vehicle. This includes coverage for parts *and* labor.

Compare the guarantees offered on these parts by aftermarket repair shops — many don't offer the extensive coverage Toyota does. And remember that only Genuine Toyota Parts are manufactured to your vehicle's exact specifications. So don't compromise; when replacement time comes, count on your Toyota dealer for quality, performance and the peace of mind that comes with a factory-backed lifetime guarantee.

For complete details of the Toyota Lifetime Guarantee, see an authorized Toyota dealer.



The reputation for quality and reliability was likely a key reason behind your decision to buy a Toyota. That overall quality is present in each of the components of your car or truck, including the battery. When it's time for a replacement, your Toyota dealer is the only place to find a battery with the power to start and operate your vehicle like new.

To maintain the original performance designed into your Toyota, a replacement battery must meet Toyota's specifications for Cold Cranking Amps (CCA) and Reserve Capacity (RC). RC, a specification often not met by aftermarket brands, supplies the power you need during high-demand conditions such as driving in heavy traffic. RC is also what gives you the power to operate electronic accessories with the engine off. By choosing a TrueStart,™ you can be confident your battery will meet your needs, every day.

Warranty coverage is another important consideration when selecting a replacement battery. TrueStart™ batteries feature a free replacement period of 18 months (regardless of mileage) or the remainder of the Toyota New Vehicle Limited Warranty, whichever is longer. Following the free replacement period, warranty coverage is prorated based on the battery's time in use. See your Toyota dealer for more details.

Don't entrust your Toyota's performance to anything less than the best: Genuine Toyota TrueStart™ Batteries.



Insist on Genuine Toyota Quality

If you're involved in a collision, you want your vehicle to be returned to its pre-accident condition when repaired. To maintain your Toyota's value, it's important to make sure it's repaired with Genuine Toyota Parts. Some repair shops and insurance companies may suggest using imitation or used salvage parts to save money. However, these parts do not meet Toyota's high standards for quality, fit and corrosion resistance. In addition, imitation and used salvage parts are not covered by any Toyota warranty (see box at right).

To maintain the appearance, performance and safety of your Toyota, make sure only Genuine Toyota Parts are used for collision repairs. Protect your investment — insist on Genuine Toyota quality.

Toyota warranty coverage remains intact when vehicle repairs are completed with Genuine Toyota Parts. Toyota warranties do not cover imitation or used salvage parts or any damage or failures caused by the use of such parts.

In Case of Accident, Be an Informed Owner

Toyota believes customers have the right to choose the types of parts used in the repair of their vehicles. That's why Toyota supports full disclosure by repair shops and insurance companies regarding parts used for collision repair. The following information is provided to help you understand the differences in the types of parts that could be used in the repair of your vehicle.

General Information

"Collision repair parts" or "replacement crash parts" are the parts typically replaced during the repair of a vehicle that has been damaged in a collision. These parts include exterior sheet metal such as fenders, hoods, doors and related components; and plastic components such as bumper covers and lamp assemblies.

Warranty Coverage

Warranties for collision repair parts are provided by the manufacturer or distributor of the parts. Warranty coverage varies. Your insurance company or collision repair facility should provide you with written warranty statements for all parts used in the repair of your vehicle.

Types of Collision Repair Parts

New Original-Equipment Manufacturer (OEM)

Parts that are made by the vehicle manufacturer or one of its licensees and distributed through its normal channels. These parts maintain the manufacturer's vehicle warranty.

Aftermarket or Imitation

Parts that are made by companies other than the vehicle manufacturer or its licensees.

Recycled or Used Salvage

Used parts and assemblies that have been removed from another vehicle. There are no systems in place to regulate the quality or safety of these parts.

Remanufactured

Parts that have been returned to like-new condition through repair, refurbishing or rebuilding.

Due to the critical nature of Supplemental Restraint Systems (also known as air bags), Toyota does not support the use of imitation or used parts for their repair. Only new Genuine Toyota Parts should be used to repair/replace Supplemental Restraint Systems.

Do-It-Yourself Products

When it's time to replace key wear items on your vehicle, don't settle for less than Genuine Toyota Parts. Available exclusively through Toyota dealerships, Genuine Toyota Parts meet the highest standards of quality and performance and are built to exact factory specifications. Here are a few of your vehicle's components that are particularly subject to wear and some benefits of replacing them with Genuine Toyota Parts.

Genuine Toyota Platinum Spark Plugs*

- Designed to last at least 60,000 miles.
- Provide the maximum spark required by Toyota's high-compression engines.
- Resist fouling and misfires for more efficient combustion and better fuel economy.

Genuine Toyota Brake Pads

- Friction materials selected for optimum performance when matched with Toyota brake drums or rotors.
- Precision-machined backing plates allow pads to move freely within the calipers for smooth, efficient braking.

Genuine Toyota Wiper Inserts

- Cut to match the exact length and shape of your vehicle's wiper blades for a proper and secure fit.
- Constructed of compression-molded natural rubber — not synthetic — for superior wiping performance.



* Available for selected models. See your dealer for details.

Genuine Toyota Chemicals

Toyota offers a complete line of products to help you keep your Toyota looking and running like new. To safeguard your vehicle's appearance, you'll find everything from fabric spot remover and glass cleaner to liquid car wash and touch-up paint. When it's time to get under the hood (or under the car), products such as fuel injector cleaner, brake fluid and silicone spray will help you get the job done. All of these products are formulated specifically for use with Toyota vehicles, so you can be confident you're giving your vehicle the best care possible, inside and out.

Genuine Toyota Antifreeze Coolant

Genuine Toyota Long Life Antifreeze Coolant is the same high quality, factory-fill product found in all new Toyotas. You'll know it by its distinctive red color. It provides maximum protection and durability without the use of harmful silicates. And because it's compatible with non-metallic materials, it helps extend the life of water-pump seals. Don't trust your engine to anything less than the best: Genuine Toyota Long Life Antifreeze Coolant.

Genuine Toyota Motor Oil

Your Toyota's engine features highly advanced technology to ensure superior performance, reliability and fuel economy. Genuine Toyota Motor Oil is formulated with a special combination of lube-base stocks and an additive blend to maximize the benefits of this technology. Make sure you're getting the most out of your engine by always putting the best into it: Genuine Toyota Motor Oil.



Toyota Parts Centers

If you plan to perform your own maintenance or repairs on your Toyota, be sure to check out your nearby Toyota Parts Center (TPC). More than 500 Toyota dealerships now have a TPC, which is an in-dealership parts store offering a wide selection of automotive products. All TPCs feature a complete line of Genuine Toyota maintenance parts and car-care products for "do-it-yourselfers."

In addition to Toyota maintenance and repair products, TPCs offer free technical advice to Toyota owners who want to service their own vehicles. You'll also find model-specific parts application guides and how-to brochures covering most common maintenance jobs. Both are provided to customers free of charge.

Toyota Parts Centers are open during regular dealership hours; many also have extended evening and weekend hours. If you're a do-it-yourselfer, stop by and experience the service, selection and value offered by your local TPC.



If you'll be doing some of your own maintenance and repair work on your vehicle, a Toyota service manual will be one of your most valuable tools. Toyota offers three types of manuals to assist do-it-yourselfers. To order any of the following manuals, call Toyota's service publications department at (800)622-2033.

Vehicle Repair Manual

This is the same manual used by professional technicians in Toyota dealerships throughout the United States. It is fully illustrated and includes maintenance and repair procedures for all vehicle mechanical systems. It also includes instructions for vehicle tune-ups.

Electrical Systems Manual

This manual provides detailed wiring diagrams for each electrical system in your vehicle, along with troubleshooting tips and repair procedures.

Automatic Transmission/Transaxle Repair Manual

This manual includes complete procedures for overhauling the automatic transmission/transaxle of your vehicle.

For information on basic do-it-yourself maintenance items, see the "Vehicle Maintenance and Care" and "Do-It-Yourself Maintenance" sections of your *Owner's Manual*.



TOYOTA
FINANCIAL SERVICES

Extended Service Coverage

A Toyota Motor Insurance Services (TMIS) vehicle service agreement provides protection against unexpected repairs for mechanical breakdown beyond the factory warranty. It also protects you from increases in the cost of covered repairs. In addition, many TMIS plans include benefits such as towing, substitute transportation and travel protection with lodging and meals.

Because they are factory-backed, TMIS service agreements are accepted at all Toyota dealerships in the United States and Canada. That means repairs are made only by factory-trained technicians using Genuine Toyota Parts.

TMIS offers several levels of service agreement coverage, each with a variety of time and mileage options. Your Toyota dealer can help you select the coverage that best meets your needs.

Pre-Paid Maintenance

An excellent way to make sure your Toyota receives the recommended maintenance — and to protect yourself from increases in vehicle service costs — is to pay for maintenance services in advance.

Toyota Auto Care pre-paid maintenance plans are available for both new and used vehicles. Benefits include oil-and-filter changes, lubrication of key chassis parts and a 19-point vehicle inspection at each service interval. In addition, you receive 24-hour roadside assistance, timed service reminders and a computerized history of each service visit. The Premium Plan (available for new vehicles) also includes tire rotations and factory-recommended maintenance at service intervals of 15,000, 30,000 and 45,000 miles.

Toyota Auto Care plans offer two coverage levels as well as several options for service intervals, time and mileage. Ask your Toyota dealer to help you select the options that are best for you.

Toyota Financial Services is a servicemark used by Toyota Motor Insurance Services, Inc.

Determining the Proper Maintenance Interval

Depending on your circumstances, you should obtain maintenance for your Toyota every 5,000 miles or every 7,500 miles. Follow these guidelines to determine which interval to use.

5,000-Mile Intervals

Use 5,000-mile intervals if you primarily operate your vehicle under any of the following conditions:

- Driving on unpaved or dusty roads.
- Towing a trailer or using a camper or car-top carrier.
- Repeated trips of less than five miles in temperatures below freezing.

7,500-Mile Intervals

Use 7,500-mile intervals if you primarily operate your vehicle under conditions other than those listed above.

Following the Maintenance Log Charts

The Scheduled Maintenance Log identifies the maintenance required at each mileage interval and corresponding time interval based on mileage of 1,250 miles per month. If you drive more than 1,250 miles per month, you should obtain maintenance at the indicated mileage interval rather than the indicated time interval.

If you choose 5,000-mile intervals, follow the maintenance instructions shown below non-shaded headings such as this one:

5,000 Miles or 4 Months

If you choose 7,500-mile intervals, follow the maintenance instructions shown below shaded headings such as this one:

7,500 Miles or 6 Months

At 15,000-mile increments, the 5,000-mile and 7,500-mile intervals coincide. Therefore, shaded and non-shaded headings appear together, as in this example:

15,000 Miles or 12 Months
15,000 Miles or 12 Months

Special Operating Conditions

In addition to standard maintenance items, the Scheduled Maintenance Log indicates services that should be performed on vehicles that are driven under especially demanding conditions. Specific conditions require specific services, as indicated below. The Scheduled Maintenance Log indicates at which mileage/time intervals each service should be performed.

You should perform these additional maintenance services if you drive *primarily* under any of the conditions noted. If you drive only occasionally under these conditions, it is not necessary to perform the additional services.

Driving on Rough, Muddy or Snow-Melted Roads

- Rotate tires
- Inspect ball joints and dust cover
- Inspect brake linings/drums and brake pads/discs
- Inspect drive shaft boots
- Inspect nuts and bolts on chassis and body
- Inspect steering linkage
- Re-torque drive shaft bolt*
- Lubricate propeller shaft and re-torque bolt*

Driving on Salt-Covered Roads

- Lubricate propeller shaft and re-torque bolt*

Driving on Unpaved or Dusty Roads

- Inspect brake linings/drums and brake pads/discs
- Inspect or change engine air filter
- Lubricate propeller shaft and re-torque bolt*

Extensive Idling or Low-Speed Driving for Long Distances

- Inspect brake linings/drums and brake pads/discs

* Applies to selected models. See the Scheduled Maintenance Log for details.

Towing a Trailer or Using a Camper or Car-Top Carrier

- Inspect brake linings/drums and brake pads/discs
- Inspect nuts and bolts on chassis and body
- Replace differential oil
- Replace transmission fluid or oil
- Replace transfer oil*
- Lubricate propeller shaft and re-torque bolt*

Off-Road Maintenance

If you own a Land Cruiser or a four-wheel drive RAV4, Tacoma, Tundra or 4Runner, you should check the following items daily whenever you drive off-road through deep sand, mud or water:

- Brake lines and hoses
- Brake linings/drums and brake pads/discs
- Engine air filter
- Differential oil
- Steering wheel, linkage and boots
- Transfer oil
- Transmission fluid or oil
- Wheel bearings

For all four-wheel drive vehicles except RAV4, you should also lubricate the propeller shafts daily.

Explanation of Maintenance Items

The following descriptions are provided to give you a better understanding of the maintenance items that should be performed on your vehicle. The Scheduled Maintenance Log indicates at which mileage/time intervals each item should be performed. Please note that many maintenance items should be performed only by a qualified technician.

For further information on maintenance items you can perform yourself, see the "Vehicle Maintenance and Care" and "Do-It-Yourself Maintenance" sections of your *Owner's Manual*.

Automatic Transmission Fluid or Manual Transmission Oil

Inspect each component for signs of leakage. If you discover any leakage, have it repaired by a qualified technician immediately.

Ball Joints and Dust Covers

Check the suspension and steering linkage ball joints for looseness and damage. Check all dust covers for deterioration and damage. A qualified technician should perform these inspections.

Brake Lines and Hoses

Visually inspect for proper installation. Check for chafing, cracks, deterioration and evidence of leaking. Replace any deteriorated or damaged parts immediately. A qualified technician should perform these operations.

Brake Linings/Drums and Brake Pads/Discs

Check the brake linings (shoes) and drums for scoring, burning, fluid leakage, broken parts and excessive wear. Check the pads for excessive wear and the discs for runout, excessive wear and fluid leakage. A qualified technician should perform these inspections.

Charcoal Canister (CA, MA and NY vehicles)

Check for internal damage and clogging. If necessary, clean with compressed air or replace. A qualified technician should perform these operations.

Differential Oil

Inspect each component for signs of leakage. If you discover any leakage, have it repaired by a qualified technician immediately.

Drive Belts

Inspect for cracks, excessive wear and oiliness. Check the belt tension and adjust if necessary. Replace the belts if they are damaged.

Drive Shaft Boots

Check the drive shaft boots and clamps for cracks, deterioration and damage. Replace any damaged parts and, if necessary, repack the grease. Selected models also require periodic inspection of the drive shaft bolt for proper torque. A qualified technician should perform these operations.

Engine Air Filter

Check for damage, excessive wear and oiliness. Replace if necessary.

Engine Coolant

Drain and flush the cooling system and refill with an ethylene-glycol type coolant. A qualified technician should perform this operation.

Engine Oil and Oil Filter

Change the oil filter and replace the engine oil with API SJ, Energy-Conserving II multigrade or ILSAC multigrade oil. For recommended viscosity, refer to your *Owner's Manual*.

Engine Valves

Inspect for excessive lifter noise and engine vibration and adjust if necessary. A qualified technician should perform this operation.

Exhaust Pipes and Mountings

Visually inspect the exhaust pipes, muffler and hangers for cracks, deterioration and damage. Start the engine and listen carefully for any exhaust gas leakage. Tighten connections or replace parts as necessary.

Fuel Lines and Connections, Fuel Tank Band and Fuel Tank Vapor Vent System Hoses

Visually inspect for corrosion, damage, cracks and loose or leaking connections. Tighten connections or replace parts as necessary.

Fuel Tank Cap Gasket

Visually inspect for cracks, deterioration and damage and replace if necessary.

Nuts and Bolts on Chassis and Body

Re-tighten the seat mounting bolts and front/rear suspension member retaining bolts to specified torque.

Propeller Shaft

Lubricate the propeller shaft spiders and slide yokes with lithium-base chassis grease and the double cardan joint with molybdenum-disulfide lithium-base chassis grease, and re-torque the bolt. Only a qualified technician should re-torque the bolt.

Spark Plugs

Install new plugs of the same type as originally equipped. A qualified technician should perform this operation.

Steering Gear Box

Inspect for signs of leakage. If you discover any leakage, have it repaired immediately by a qualified technician.

Steering Wheel, Linkage and Boots

With the vehicle stopped, check for excessive freeplay in the steering wheel. Inspect the linkage for bending and damage and the dust boots for deterioration, cracks and damage. Replace any damaged parts. A qualified technician should perform these operations.

Timing Belt

Replace every 90,000 miles. A qualified technician should perform this operation.

Tire Rotation

Tires should be rotated according to the instructions in the *Owner's Manual*. When rotating tires, check for damage and uneven wear.

Transfer Case Oil

Inspect each component for signs of leakage. If you discover any leakage, have it repaired by a qualified technician immediately.

Wheel Bearing and Drive Shaft Bearing Grease

Repack the wheel bearings with wheel bearing grease and the front drive shaft bearings with molybdenum-disulfide lithium-base chassis grease. A qualified technician should perform these operations.

5,000-Mile Maintenance Intervals
7,500-Mile Maintenance Intervals

To determine the appropriate maintenance interval for your vehicle, see page 17.

5,000 Miles or 4 Months

❑ Replace engine oil and oil filter

Additional Maintenance Items for Special Operating Conditions:*

❑ Inspect the following:

- __ Ball joints and dust covers
- __ Brake linings/drums and brake pads/discs
- __ Drive shaft boots
- __ Engine air filter
- __ Nuts and bolts on chassis and body
- __ Steering wheel, linkage and boots

❑ Rotate tires (except MR2 Spyder)

DEALER SERVICE VERIFICATION

Date: _____

Mileage: _____

10,000 Miles or 8 Months

❑ Replace engine oil and oil filter

Additional Maintenance Items for Special Operating Conditions:*

❑ Inspect the following:

- __ Ball joints and dust covers
- __ Brake linings/drums and brake pads/discs
- __ Drive shaft boots
- __ Engine air filter
- __ Nuts and bolts on chassis and body
- __ Steering wheel, linkage and boots

❑ Rotate tires (except MR2 Spyder)

DEALER SERVICE VERIFICATION

Date: _____

Mileage: _____

7,500 Miles or 6 Months

❑ Replace engine oil and oil filter

❑ Rotate tires (except MR2 Spyder)

DEALER SERVICE VERIFICATION

Date: _____

Mileage: _____

* Specific services apply to specific operating conditions. See pages 18–19 for details.

15,000 Miles or 12 Months

15,000 Miles or 12 Months

- ❑ Replace engine oil and oil filter
- ❑ Rotate tires (except MR2 Spyder)
- ❑ Replace air conditioning filter (Avalon)
- ❑ Inspect the following:
  - __ Ball joints and dust covers
  - __ Brake lines and hoses
  - __ Brake linings/drums and brake pads/discs
  - __ Drive shaft boots
  - __ Exhaust pipes and mountings
  - __ Steering gear box
  - __ Steering wheel, linkage and boots

Additional Maintenance Items for Special Operating Conditions:*

- ❑ Inspect automatic transmission fluid (Avalon, Camry, Camry Solara, Corolla, Sienna)
- ❑ Inspect differential oil[1]
- ❑ Inspect engine air filter
- ❑ Inspect nuts and bolts on chassis and body

DEALER SERVICE VERIFICATION

Date: _____

Mileage: _____

TOYOTA
GENUINE PARTS

[1] Applies to Avalon, Camry, Camry Solara, Corolla and Sienna models with automatic transmission.

5,000-Mile Maintenance Intervals
7,500-Mile Maintenance Intervals

To determine the appropriate maintenance interval for your vehicle, see page 17.

20,000 Miles or 16 Months

❑ Replace engine oil and oil filter

Additional Maintenance Items for Special Operating Conditions:*

❑ Inspect the following:

- __ Ball joints and dust covers
- __ Brake linings/drums and brake pads/discs
- __ Drive shaft boots
- __ Engine air filter
- __ Nuts and bolts on chassis and body
- __ Steering wheel, linkage and boots

❑ Rotate tires (except MR2 Spyder)

DEALER SERVICE VERIFICATION

Date: _____

Mileage: _____

25,000 Miles or 20 Months

❑ Replace engine oil and oil filter

Additional Maintenance Items for Special Operating Conditions:*

❑ Inspect the following:

- __ Ball joints and dust covers
- __ Brake linings/drums and brake pads/discs
- __ Drive shaft boots
- __ Engine air filter
- __ Nuts and bolts on chassis and body
- __ Steering wheel, linkage and boots

❑ Rotate tires (except MR2 Spyder)

DEALER SERVICE VERIFICATION

Date: _____

Mileage: _____

22,500 Miles or 18 Months

❑ Replace engine oil and oil filter

❑ Rotate tires (except MR2 Spyder)

DEALER SERVICE VERIFICATION

Date: _____

Mileage: _____

* Specific services apply to specific operating conditions. See pages 18–19 for details.

30,000 Miles or 24 Months
30,000 Miles or 24 Months

- ❑ Replace engine air filter
- ❑ Replace engine coolant
- ❑ Replace air conditioning filter (Avalon)
- ❑ Replace engine oil and oil filter
- ❑ Rotate tires (except MR2 Spyder)
- ❑ Inspect the following:
  - __ Ball joints and dust covers
  - __ Brake lines and hoses
  - __ Brake linings/drums and brake pads/discs
  - __ Differential oil
  - __ Fuel lines and connections, fuel tank band and fuel tank vapor vent system hoses
  - __ Drive shaft boots
  - __ Exhaust pipes and mountings
  - __ Fuel tank cap gasket
  - __ Steering gear box
  - __ Steering wheel, linkage and boots
  - __ Transmission fluid or oil

Additional Maintenance Items for Special Operating Conditions:*

- ❑ Inspect nuts and bolts on chassis and body
- ❑ Replace automatic transmission fluid (Avalon, Camry, Camry Solara, Corolla, Sienna)
- ❑ Replace differential oil[1]
- ❑ Replace manual transmission oil

DEALER SERVICE VERIFICATION

Date: _____

Mileage: _____

TOYOTA

QUALITY SERVICE

[1] Applies to all models with manual transmission and Avalon, Camry, Camry Solara, Corolla and Sienna models with automatic transmission.

5,000-Mile Maintenance Intervals
7,500-Mile Maintenance Intervals

To determine the appropriate maintenance interval for your vehicle, see page 17.

35,000 Miles or 28 Months

❑ Replace engine oil and oil filter

Additional Maintenance Items for Special Operating Conditions:*

❑ Inspect the following:

__ Ball joints and dust covers
__ Brake linings/drums and brake pads/discs
__ Drive shaft boots
__ Engine air filter
__ Nuts and bolts on chassis and body
__ Steering wheel, linkage and boots

❑ Rotate tires (except MR2 Spyder)

DEALER SERVICE VERIFICATION

Date: _____

Mileage: _____

40,000 Miles or 32 Months

❑ Replace engine oil and oil filter

Additional Maintenance Items for Special Operating Conditions:*

❑ Inspect the following:

__ Ball joints and dust covers
__ Brake linings/drums and brake pads/discs
__ Drive shaft boots
__ Engine air filter
__ Nuts and bolts on chassis and body
__ Steering wheel, linkage and boots

❑ Rotate tires (except MR2 Spyder)

DEALER SERVICE VERIFICATION

Date: _____

Mileage: _____

37,500 Miles or 30 Months

❑ Replace engine oil and oil filter

❑ Rotate tires (except MR2 Spyder)

DEALER SERVICE VERIFICATION

Date: _____

Mileage: _____

* Specific services apply to specific operating conditions. See pages 18–19 for details.

45,000 Miles or 36 Months

45,000 Miles or 36 Months

- ❑ Replace engine oil and oil filter
- ❑ Rotate tires (except MR2 Spyder)
- ❑ Replace air conditioning filter (Avalon)
- ❑ Inspect the following:
  - __ Ball joints and dust covers
  - __ Brake lines and hoses
  - __ Brake linings/drums and brake pads/discs
  - __ Drive shaft boots
  - __ Exhaust pipes and mountings
  - __ Steering gear box
  - __ Steering wheel, linkage and boots

Additional Maintenance Items for Special Operating Conditions:*

- ❑ Inspect automatic transmission fluid (Avalon, Camry, Camry Solara, Corolla, Sienna)
- ❑ Inspect differential oil[1]
- ❑ Inspect engine air filter
- ❑ Inspect nuts and bolts on chassis and body

DEALER SERVICE VERIFICATION

Date: _____

Mileage: _____

[1] Applies to Avalon, Camry, Camry Solara, Corolla and Sienna models with automatic transmission.

5,000-Mile Maintenance Intervals
7,500-Mile Maintenance Intervals

To determine the appropriate maintenance interval for your vehicle, see page 17.

50,000 Miles or 40 Months

❑ Replace engine oil and oil filter

Additional Maintenance Items for Special Operating Conditions:*

❑ Inspect the following:

- __ Ball joints and dust covers
- __ Brake linings/drums and brake pads/discs
- __ Drive shaft boots
- __ Engine air filter
- __ Nuts and bolts on chassis and body
- __ Steering wheel, linkage and boots

❑ Rotate tires (except MR2 Spyder)

DEALER SERVICE VERIFICATION

Date: _____

Mileage: _____

55,000 Miles or 44 Months

❑ Replace engine oil and oil filter

Additional Maintenance Items for Special Operating Conditions:*

❑ Inspect the following:

- __ Ball joints and dust covers
- __ Brake linings/drums and brake pads/discs
- __ Drive shaft boots
- __ Engine air filter
- __ Nuts and bolts on chassis and body
- __ Steering wheel, linkage and boots

❑ Rotate tires (except MR2 Spyder)

DEALER SERVICE VERIFICATION

Date: _____

Mileage: _____

52,500 Miles or 42 Months

❑ Replace engine oil and oil filter

❑ Rotate tires (except MR2 Spyder)

DEALER SERVICE VERIFICATION

Date: _____

Mileage: _____

* Specific services apply to specific operating conditions. See pages 18–19 for details.

60,000 Miles or 48 Months

60,000 Miles or 48 Months

- ❑ Replace engine air filter
- ❑ Replace engine coolant
- ❑ Replace air conditioning filter (Avalon)
- ❑ Replace platinum spark plugs (Camry, Camry Solara, Sienna)[1]
- ❑ Replace engine oil and oil filter
- ❑ Rotate tires (except MR2 Spyder)
- ❑ Inspect the following:
  - __ Ball joints and dust covers
  - __ Brake lines and hoses
  - __ Brake linings/drums and brake pads/discs
  - __ Charcoal canister (Sienna)[2]
  - __ Differential oil
  - __ Drive belts[3]
  - __ Fuel lines and connections, fuel tank band and fuel tank vapor vent system hoses
  - __ Drive shaft boots
  - __ Engine valve clearance
  - __ Exhaust pipes and mountings
  - __ Fuel tank cap gasket
  - __ Steering gear box
  - __ Steering wheel, linkage and boots
  - __ Transmission fluid or oil

Additional Maintenance Items for Special Operating Conditions:*

- ❑ Inspect nuts and bolts on chassis and body
- ❑ Replace automatic transmission fluid
- ❑ Replace differential oil
- ❑ Replace manual transmission oil

DEALER SERVICE VERIFICATION

Date: _____

Mileage: _____

[1] Required under the terms of the Emission Control Warranty.

[2] Inspect at 60,000 miles or 72 months, whichever comes first. Required only for vehicles in California, Massachusetts and New York.

[3] Initial inspection at 60,000 miles. Inspect every 15,000 miles thereafter.

5,000-Mile Maintenance Intervals
7,500-Mile Maintenance Intervals

To determine the appropriate maintenance interval for your vehicle, see page 17.

65,000 Miles or 52 Months

❑ Replace engine oil and oil filter

Additional Maintenance Items for Special Operating Conditions:*

❑ Inspect the following:

__ Ball joints and dust covers
__ Brake linings/drums and brake pads/discs
__ Drive shaft boots
__ Engine air filter
__ Nuts and bolts on chassis and body
__ Steering wheel, linkage and boots

❑ Rotate tires (except MR2 Spyder)

DEALER SERVICE VERIFICATION

Date: _____

Mileage: _____

70,000 Miles or 56 Months

❑ Replace engine oil and oil filter

Additional Maintenance Items for Special Operating Conditions:*

❑ Inspect the following:

__ Ball joints and dust covers
__ Brake linings/drums and brake pads/discs
__ Drive shaft boots
__ Engine air filter
__ Nuts and bolts on chassis and body
__ Steering wheel, linkage and boots

❑ Rotate tires (except MR2 Spyder)

DEALER SERVICE VERIFICATION

Date: _____

Mileage: _____

67,500 Miles or 54 Months

❑ Replace engine oil and oil filter

❑ Rotate tires (except MR2 Spyder)

DEALER SERVICE VERIFICATION

Date: _____

Mileage: _____

* Specific services apply to specific operating conditions. See pages 18–19 for details.

75,000 Miles or 60 Months
75,000 Miles or 60 Months

❑ Replace engine oil and oil filter

❑ Rotate tires (except MR2 Spyder)

❑ Replace air conditioning filter (Avalon)

❑ Inspect the following:

__ Ball joints and dust covers
__ Brake lines and hoses
__ Brake linings/drums and brake pads/discs
__ Drive belts
__ Drive shaft boots
__ Exhaust pipes and mountings
__ Steering gear box
__ Steering wheel, linkage and boots

Additional Maintenance Items for Special Operating Conditions:*

❑ Inspect automatic transmission fluid (Avalon, Camry, Camry Solara, Corolla, Sienna)

❑ Inspect differential oil[1]

❑ Inspect engine air filter

❑ Inspect nuts and bolts on chassis and body

DEALER SERVICE VERIFICATION

Date: _____

Mileage: _____

TOYOTA
GENUINE PARTS

[1] Applies to Avalon, Camry, Camry Solara, Corolla and Sienna models with automatic transmission.

5,000-Mile Maintenance Intervals
7,500-Mile Maintenance Intervals

To determine the appropriate maintenance interval for your vehicle, see page 17.

80,000 Miles or 64 Months

❑ Replace engine oil and oil filter

Additional Maintenance Items for Special Operating Conditions:*

❑ Inspect the following:

__ Ball joints and dust covers
__ Brake linings/drums and brake pads/discs
__ Drive shaft boots
__ Engine air filter
__ Nuts and bolts on chassis and body
__ Steering wheel, linkage and boots

❑ Rotate tires (except MR2 Spyder)

DEALER SERVICE VERIFICATION

Date: _____

Mileage: _____

85,000 Miles or 68 Months

❑ Replace engine oil and oil filter

Additional Maintenance Items for Special Operating Conditions:*

❑ Inspect the following:

__ Ball joints and dust covers
__ Brake linings/drums and brake pads/discs
__ Drive shaft boots
__ Engine air filter
__ Nuts and bolts on chassis and body
__ Steering wheel, linkage and boots

❑ Rotate tires (except MR2 Spyder)

DEALER SERVICE VERIFICATION

Date: _____

Mileage: _____

82,500 Miles or 66 Months

❑ Replace engine oil and oil filter

❑ Rotate tires (except MR2 Spyder)

DEALER SERVICE VERIFICATION

Date: _____

Mileage: _____

* Specific services apply to specific operating conditions. See pages 18–19 for details.

90,000 Miles or 72 Months

90,000 Miles or 72 Months

- ❑ Replace engine air filter
- ❑ Replace engine coolant
- ❑ Replace air conditioning filter (Avalon)
- ❑ Replace timing belt (Avalon, Camry, Camry Solara, Sienna)
- ❑ Replace engine oil and oil filter
- ❑ Rotate tires (except MR2 Spyder)
- ❑ Inspect the following:
  - __ Ball joints and dust covers
  - __ Brake lines and hoses
  - __ Brake linings/drums and brake pads/discs
  - __ Differential oil
  - __ Drive belts
  - __ Fuel lines and connections, fuel tank band and fuel tank vapor vent system hoses
  - __ Drive shaft boots
  - __ Exhaust pipes and mountings
  - __ Fuel tank cap gasket
  - __ Steering gear box
  - __ Steering wheel, linkage and boots
  - __ Transmission fluid or oil

Additional Maintenance Items for Special Operating Conditions:*

- ❑ Inspect nuts and bolts on chassis and body
- ❑ Replace automatic transmission fluid (Avalon, Camry, Camry Solara, Corolla, Sienna)
- ❑ Replace differential oil[1]
- ❑ Replace manual transmission oil

DEALER SERVICE VERIFICATION

Date: _____

Mileage: _____

TOYOTA

QUALITY SERVICE

[1] Applies to all models with manual transmission and Avalon, Camry, Camry Solara, Corolla and Sienna models with automatic transmission.

5,000-Mile Maintenance Intervals
7,500-Mile Maintenance Intervals

To determine the appropriate maintenance interval for your vehicle, see page 17.

95,000 Miles or 76 Months

❑ Replace engine oil and oil filter

Additional Maintenance Items for Special Operating Conditions:*

❑ Inspect the following:

- __ Ball joints and dust covers
- __ Brake linings/drums and brake pads/discs
- __ Drive shaft boots
- __ Engine air filter
- __ Nuts and bolts on chassis and body
- __ Steering wheel, linkage and boots

❑ Rotate tires (except MR2 Spyder)

DEALER SERVICE VERIFICATION

Date: _____

Mileage: _____

100,000 Miles or 80 Months

❑ Replace engine oil and oil filter

Additional Maintenance Items for Special Operating Conditions:*

❑ Inspect the following:

- __ Ball joints and dust covers
- __ Brake linings/drums and brake pads/discs
- __ Drive shaft boots
- __ Engine air filter
- __ Nuts and bolts on chassis and body
- __ Steering wheel, linkage and boots

❑ Rotate tires (except MR2 Spyder)

DEALER SERVICE VERIFICATION

Date: _____

Mileage: _____

97,500 Miles or 78 Months

❑ Replace engine oil and oil filter

❑ Rotate tires (except MR2 Spyder)

DEALER SERVICE VERIFICATION

Date: _____

Mileage: _____

* Specific services apply to specific operating conditions. See pages 18–19 for details.

105,000 Miles or 84 Months

105,000 Miles or 84 Months

- ❑ Replace engine oil and oil filter
- ❑ Rotate tires (except MR2 Spyder)
- ❑ Replace air conditioning filter (Avalon)
- ❑ Inspect the following:
  - __ Ball joints and dust covers
  - __ Brake lines and hoses
  - __ Brake linings/drums and brake pads/discs
  - __ Drive belts
  - __ Drive shaft boots
  - __ Exhaust pipes and mountings
  - __ Steering gear box
  - __ Steering wheel, linkage and boots

Additional Maintenance Items for Special Operating Conditions:*

- ❑ Inspect automatic transmission fluid (Avalon, Camry, Camry Solara, Corolla, Sienna)
- ❑ Inspect differential oil[1]
- ❑ Inspect engine air filter
- ❑ Inspect nuts and bolts on chassis and body

DEALER SERVICE VERIFICATION

Date: _____

Mileage: _____

[1] Applies to Avalon, Camry, Camry Solara, Corolla and Sienna models with automatic transmssion.

5,000-Mile Maintenance Intervals
7,500-Mile Maintenance Intervals

To determine the appropriate maintenance interval for your vehicle, see page 17.

110,000 Miles or 88 Months

❑ Replace engine oil and oil filter

Additional Maintenance Items for Special Operating Conditions:*

❑ Inspect the following:

- __ Ball joints and dust covers
- __ Brake linings/drums and brake pads/discs
- __ Drive shaft boots
- __ Engine air filter
- __ Nuts and bolts on chassis and body
- __ Steering wheel, linkage and boots

❑ Rotate tires (except MR2 Spyder)

DEALER SERVICE VERIFICATION

Date: _____

Mileage: _____

115,000 Miles or 92 Months

❑ Replace engine oil and oil filter

Additional Maintenance Items for Special Operating Conditions:*

❑ Inspect the following:

- __ Ball joints and dust covers
- __ Brake linings/drums and brake pads/discs
- __ Drive shaft boots
- __ Engine air filter
- __ Nuts and bolts on chassis and body
- __ Steering wheel, linkage and boots

❑ Rotate tires (except MR2 Spyder)

DEALER SERVICE VERIFICATION

Date: _____

Mileage: _____

112,500 Miles or 90 Months

❑ Replace engine oil and oil filter

❑ Rotate tires (except MR2 Spyder)

DEALER SERVICE VERIFICATION

Date: _____

Mileage: _____

* Specific services apply to specific operating conditions. See pages 18–19 for details.

120,000 Miles or 96 Months

120,000 Miles or 96 Months

- ❑ Replace engine air filter
- ❑ Replace engine coolant
- ❑ Rotate tires (except MR2 Spyder)
- ❑ Replace air conditioning filter (Avalon)
- ❑ Replace engine oil and oil filter
- ❑ Replace spark plugs (all models)[1]
- ❑ Inspect the following:
  - __ Ball joints and dust covers
  - __ Brake lines and hoses
  - __ Brake linings/drums and brake pads/discs
  - __ Charcoal canister (Sienna)[2]
  - __ Differential oil
  - __ Drive belts
  - __ Fuel lines and connections, fuel tank band and fuel tank vapor vent system hoses
  - __ Drive shaft boots
  - __ Engine valve clearance
  - __ Exhaust pipes and mountings
  - __ Fuel tank cap gasket
  - __ Steering gear box
  - __ Steering wheel, linkage and boots
  - __ Transmission fluid or oil

Additional Maintenance Items for Special Operating Conditions:*

- ❑ Inspect nuts and bolts on chassis and body
- ❑ Replace automatic transmission fluid
- ❑ Replace differential oil
- ❑ Replace manual transmission oil

DEALER SERVICE VERIFICATION

Date: _____

Mileage: _____

[1] Required under the terms of the Emission Control Warranty.

[2] Inspect at 120,000 miles or 144 months, whichever comes first. Required only for vehicles in California, Massachusetts and New York.

Maintenance Log: SUVs & Trucks

5,000-Mile Maintenance Intervals
7,500-Mile Maintenance Intervals

To determine the appropriate maintenance interval for your vehicle, see page 17.

5,000 Miles or 4 Months

❑ Replace engine oil and oil filter

Additional Maintenance Items for Special Operating Conditions:*

❑ Inspect the following:

__ Ball joints and dust covers
__ Brake linings/drums and brake pads/discs
__ Drive shaft boots
__ Engine air filter
__ Nuts and bolts on chassis and body
__ Steering wheel, linkage and boots

❑ Rotate tires
❑ Lubricate propeller shaft and re-torque bolt (all 4WD except RAV4)
❑ Re-torque drive shaft bolt (4WD RAV4)

DEALER SERVICE VERIFICATION

Date: _____

Mileage: _____

10,000 Miles or 8 Months

❑ Replace engine oil and oil filter

Additional Maintenance Items for Special Operating Conditions:*

❑ Inspect the following:

__ Ball joints and dust covers
__ Brake linings/drums and brake pads/discs
__ Drive shaft boots
__ Engine air filter
__ Nuts and bolts on chassis and body
__ Steering wheel, linkage and boots

❑ Rotate tires
❑ Lubricate propeller shaft and re-torque bolt (all 4WD except RAV4)
❑ Re-torque drive shaft bolt (4WD RAV4)

DEALER SERVICE VERIFICATION

Date: _____

Mileage: _____

7,500 Miles or 6 Months

❑ Replace engine oil and oil filter

❑ Rotate tires

DEALER SERVICE VERIFICATION

Date: _____

Mileage: _____

* Specific services apply to specific operating conditions. See pages 18–19 for details.

15,000 Miles or 12 Months

15,000 Miles or 12 Months

- ❑ Replace engine oil and oil filter
- ❑ Rotate tires
- ❑ Lubricate propeller shaft (all 4WD except RAV4)
- ❑ Re-torque drive shaft bolt (4WD RAV4))
- ❑ Re-torque propeller shaft bolt (all models except RAV4)
- ❑ Inspect the following:
  - __ Automatic transmission fluid (Tundra)
  - __ Ball joints and dust covers
  - __ Brake lines and hoses
  - __ Brake linings/drums and brake pads/discs
  - __ Drive shaft boots (all 4WD models and 2WD RAV4)
  - __ Exhaust pipes and mountings
  - __ Front differential oil (all 4WD except RAV4)
  - __ Limited-slip differential oil (Land Cruiser, 4WD RAV4)[1]
  - __ Rear differential oil (all models except 2WD RAV4)
  - __ Steering gear box
  - __ Steering wheel, linkage and boots

Additional Maintenance Items for Special Operating Conditions:*

- ❑ Inspect automatic transmission fluid (Land Cruiser, RAV4, Tacoma, 4Runner)
- ❑ Inspect engine air filter
- ❑ Inspect front differential oil (2WD and 4WD RAV4)
- ❑ Inspect nuts and bolts on chassis and body
- ❑ Replace automatic transmission fluid (Tundra)
- ❑ Replace front differential oil (all 4WD except RAV4)
- ❑ Replace rear differential oil (including limited-slip)

DEALER SERVICE VERIFICATION

Date: _____

Mileage: _____

TOYOTA
GENUINE PARTS

[1] If vehicle is equipped with limited-slip differential.

Maintenance Log: SUVs & Trucks

5,000-Mile Maintenance Intervals
7,500-Mile Maintenance Intervals

To determine the appropriate maintenance interval for your vehicle, see page 17.

20,000 Miles or 16 Months

❑ Replace engine oil and oil filter

Additional Maintenance Items for Special Operating Conditions:*

❑ Inspect the following:

__ Ball joints and dust covers
__ Brake linings/drums and brake pads/discs
__ Drive shaft boots
__ Engine air filter
__ Nuts and bolts on chassis and body
__ Steering wheel, linkage and boots

❑ Rotate tires
❑ Lubricate propeller shaft and re-torque bolt (all 4WD except RAV4)
❑ Re-torque drive shaft bolt (4WD RAV4)

DEALER SERVICE VERIFICATION

Date: _____

Mileage: _____

25,000 Miles or 20 Months

❑ Replace engine oil and oil filter

Additional Maintenance Items for Special Operating Conditions:*

❑ Inspect the following:

__ Ball joints and dust covers
__ Brake linings/drums and brake pads/discs
__ Drive shaft boots
__ Engine air filter
__ Nuts and bolts on chassis and body
__ Steering wheel, linkage and boots

❑ Rotate tires
❑ Lubricate propeller shaft and re-torque bolt (all 4WD except RAV4)
❑ Re-torque drive shaft bolt (4WD RAV4)

DEALER SERVICE VERIFICATION

Date: _____

Mileage: _____

22,500 Miles or 18 Months

❑ Replace engine oil and oil filter

❑ Rotate tires

DEALER SERVICE VERIFICATION

Date: _____

Mileage: _____

* Specific services apply to specific operating conditions. See pages 18–19 for details.

30,000 Miles or 24 Months

30,000 Miles or 24 Months

- ❑ Replace engine air filter
- ❑ Replace engine coolant
- ❑ Replace engine oil and oil filter
- ❑ Rotate tires
- ❑ Replace limited-slip differential oil (Land Cruiser)[1]
- ❑ Replace non-platinum spark plugs (Tacoma, Tundra, 4Runner)[2]
- ❑ Lubricate propeller shaft (all 4WD except RAV4)
- ❑ Lubricate wheel bearings (Tacoma 2WD)
- ❑ Lubricate wheel bearings and drive shaft bearings (Land Cruiser)
- ❑ Re-torque drive shaft bolt (4WD RAV4)
- ❑ Re-torque propeller shaft bolt (all models except RAV4)
- ❑ Inspect the following:
  - __ Ball joints and dust covers
  - __ Brake lines and hoses
  - __ Brake linings/drums and brake pads/discs
  - __ Drive shaft boots (all 4WD models and 2WD RAV4)
  - __ Exhaust pipes and mountings
  - __ Front differential oil
  - __ Fuel lines and connections, fuel tank band and fuel tank vapor vent system hoses
  - __ Fuel tank cap gasket
  - __ Limited-slip differential oil (4WD RAV4)[1]
  - __ Rear differential oil (all models except 2WD RAV4)
  - __ Steering gear box
  - __ Steering wheel, linkage and boots
  - __ Transfer case oil (4WD models)
  - __ Transmission fluid or oil

Additional Maintenance Items for Special Operating Conditions:*

- ❑ Inspect nuts and bolts on chassis and body
- ❑ Replace front differential oil (2WD RAV4 and all 4WD)
- ❑ Replace rear differential oil (including limited-slip)
- ❑ Replace transmission fluid or oil

DEALER SERVICE VERIFICATION

Date: _____

Mileage: _____

TOYOTA

QUALITY SERVICE

[1] If vehicle is equipped with limited-slip differential.

[2] Required under the terms of the Emission Control Warranty.

Maintenance Log: SUVs & Trucks

5,000-Mile Maintenance Intervals
7,500-Mile Maintenance Intervals

To determine the appropriate maintenance interval for your vehicle, see page 17.

35,000 Miles or 28 Months

❑ Replace engine oil and oil filter

Additional Maintenance Items for Special Operating Conditions:*

❑ Inspect the following:

__ Ball joints and dust covers
__ Brake linings/drums and brake pads/discs
__ Drive shaft boots
__ Engine air filter
__ Nuts and bolts on chassis and body
__ Steering wheel, linkage and boots

❑ Rotate tires
❑ Lubricate propeller shaft and re-torque bolt (all 4WD except RAV4)
❑ Re-torque drive shaft bolt (4WD RAV4)

DEALER SERVICE VERIFICATION

Date: _____

Mileage: _____

40,000 Miles or 32 Months

❑ Replace engine oil and oil filter

Additional Maintenance Items for Special Operating Conditions:*

❑ Inspect the following:

__ Ball joints and dust covers
__ Brake linings/drums and brake pads/discs
__ Drive shaft boots
__ Engine air filter
__ Nuts and bolts on chassis and body
__ Steering wheel, linkage and boots

❑ Rotate tires
❑ Lubricate propeller shaft and re-torque bolt (all 4WD except RAV4)
❑ Re-torque drive shaft bolt (4WD RAV4)

DEALER SERVICE VERIFICATION

Date: _____

Mileage: _____

37,500 Miles or 30 Months

❑ Replace engine oil and oil filter

❑ Rotate tires

DEALER SERVICE VERIFICATION

Date: _____

Mileage: _____

* Specific services apply to specific operating conditions. See pages 18–19 for details.

45,000 Miles or 36 Months

45,000 Miles or 36 Months

- ❑ Replace engine oil and oil filter
- ❑ Rotate tires
- ❑ Lubricate propeller shaft (all 4WD except RAV4)
- ❑ Re-torque drive shaft bolt (4WD RAV4))
- ❑ Re-torque propeller shaft bolt (all models except RAV4)
- ❑ Inspect the following:
  - __ Automatic transmission fluid (Tundra)
  - __ Ball joints and dust covers
  - __ Brake lines and hoses
  - __ Brake linings/drums and brake pads/discs
  - __ Drive shaft boots (all 4WD models and 2WD RAV4)
  - __ Exhaust pipes and mountings
  - __ Front differential oil (all 4WD except RAV4)
  - __ Limited-slip differential oil (Land Cruiser, 4WD RAV4)[1]
  - __ Rear differential oil (all models except 2WD RAV4)
  - __ Steering gear box
  - __ Steering wheel, linkage and boots

Additional Maintenance Items for Special Operating Conditions:*

- ❑ Inspect automatic transmission fluid (Land Cruiser, RAV4, Tacoma, 4Runner)
- ❑ Inspect engine air filter
- ❑ Inspect front differential oil (2WD and 4WD RAV4)
- ❑ Inspect nuts and bolts on chassis and body
- ❑ Replace automatic transmission fluid (Tundra)
- ❑ Replace front differential oil (all 4WD except RAV4)
- ❑ Replace rear differential oil (including limited-slip)

DEALER SERVICE VERIFICATION

Date: _____

Mileage: _____

[1] If vehicle is equipped with limited-slip differential.

5,000-Mile Maintenance Intervals
7,500-Mile Maintenance Intervals

To determine the appropriate maintenance interval for your vehicle, see page 17.

50,000 Miles or 40 Months

❑ Replace engine oil and oil filter

Additional Maintenance Items for Special Operating Conditions:*

❑ Inspect the following:

- __ Ball joints and dust covers
- __ Brake linings/drums and brake pads/discs
- __ Drive shaft boots
- __ Engine air filter
- __ Nuts and bolts on chassis and body
- __ Steering wheel, linkage and boots

❑ Rotate tires
❑ Lubricate propeller shaft and re-torque bolt (all 4WD except RAV4)
❑ Re-torque drive shaft bolt (4WD RAV4)

DEALER SERVICE VERIFICATION

Date: _____

Mileage: _____

55,000 Miles or 44 Months

❑ Replace engine oil and oil filter

Additional Maintenance Items for Special Operating Conditions:*

❑ Inspect the following:

- __ Ball joints and dust covers
- __ Brake linings/drums and brake pads/discs
- __ Drive shaft boots
- __ Engine air filter
- __ Nuts and bolts on chassis and body
- __ Steering wheel, linkage and boots

❑ Rotate tires
❑ Lubricate propeller shaft and re-torque bolt (all 4WD except RAV4)
❑ Re-torque drive shaft bolt (4WD RAV4)

DEALER SERVICE VERIFICATION

Date: _____

Mileage: _____

52,500 Miles or 42 Months

❑ Replace engine oil and oil filter

❑ Rotate tires

DEALER SERVICE VERIFICATION

Date:

Mileage:

* Specific services apply to specific operating conditions. See pages 18–19 for details.

60,000 Miles or 48 Months

60,000 Miles or 48 Months

- ❑ Replace engine air filter
- ❑ Replace engine coolant
- ❑ Replace limited-slip differential oil (Land Cruiser, RAV4)[1]
- ❑ Replace platinum spark plugs (RAV4)[2]
- ❑ Replace non-platinum spark plugs (Tacoma, Tundra, 4Runner)[2]
- ❑ Lubricate propeller shaft (all 4WD except RAV4)
- ❑ Lubricate wheel bearings (Tacoma 2WD)
- ❑ Lubricate wheel bearings and drive shaft bearings (Land Cruiser)
- ❑ Re-torque drive shaft bolt (4WD RAV4)
- ❑ Re-torque propeller shaft bolt (all models except RAV4)
- ❑ Replace engine oil and oil filter
- ❑ Rotate tires
- ❑ Inspect the following:
  - __ Ball joints and dust covers
  - __ Brake lines and hoses
  - __ Brake linings/drums and brake pads/discs
  - __ Charcoal canister[3]
  - __ Drive belts[4]
  - __ Drive shaft boots (all 4WD models and 2WD RAV4)
  - __ Engine valve clearance
  - __ Fuel lines and connections, fuel tank band and fuel tank vapor vent system hoses
  - __ Exhaust pipes and mountings
  - __ Front differential oil
  - __ Fuel tank cap gasket
  - __ Rear differential oil (all models except 2WD RAV4)
  - __ Steering gear box
  - __ Steering wheel, linkage and boots
  - __ Transfer case oil (4WD models)
  - __ Transmission fluid or oil

Additional Maintenance Items for Special Operating Conditions:*

- ❑ Inspect nuts and bolts on chassis and body
- ❑ Replace front differential oil (2WD RAV4 and all 4WD)
- ❑ Replace rear differential oil (including limited-slip)
- ❑ Replace transmission fluid or oil

DEALER SERVICE VERIFICATION

Date: _____

Mileage: _____

[1] If vehicle is equipped with limited-slip differential.

[2] Required under the terms of the Emission Control Warranty.

[3] Inspect at 60,000 miles or 72 months, whichever comes first. Required only for vehicles in California, Massachusetts and New York.

[4] Initial inspection at 60,000 miles. Inspect every 15,000 miles thereafter.

5,000-Mile Maintenance Intervals
7,500-Mile Maintenance Intervals

To determine the appropriate maintenance interval for your vehicle, see page 17.

65,000 Miles or 52 Months

❑ Replace engine oil and oil filter

Additional Maintenance Items for Special Operating Conditions:*

❑ Inspect the following:

- __ Ball joints and dust covers
- __ Brake linings/drums and brake pads/discs
- __ Drive shaft boots
- __ Engine air filter
- __ Nuts and bolts on chassis and body
- __ Steering wheel, linkage and boots

❑ Rotate tires
❑ Lubricate propeller shaft and re-torque bolt (all 4WD except RAV4)
❑ Re-torque drive shaft bolt (4WD RAV4)

DEALER SERVICE VERIFICATION

Date: _____

Mileage: _____

70,000 Miles or 56 Months

❑ Replace engine oil and oil filter

Additional Maintenance Items for Special Operating Conditions:*

❑ Inspect the following:

- __ Ball joints and dust covers
- __ Brake linings/drums and brake pads/discs
- __ Drive shaft boots
- __ Engine air filter
- __ Nuts and bolts on chassis and body
- __ Steering wheel, linkage and boots

❑ Rotate tires
❑ Lubricate propeller shaft and re-torque bolt (all 4WD except RAV4)
❑ Re-torque drive shaft bolt (4WD RAV4)

DEALER SERVICE VERIFICATION

Date: _____

Mileage: _____

67,500 Miles or 54 Months

❑ Replace engine oil and oil filter

❑ Rotate tires

DEALER SERVICE VERIFICATION

Date: _____

Mileage: _____

* Specific services apply to specific operating conditions. See pages 18–19 for details.

75,000 Miles or 60 Months

75,000 Miles or 60 Months

- ❑ Replace engine oil and oil filter
- ❑ Rotate tires
- ❑ Lubricate propeller shaft (all 4WD except RAV4)
- ❑ Re-torque drive shaft bolt (4WD RAV4))
- ❑ Re-torque propeller shaft bolt (all models except RAV4)
- ❑ Inspect the following:
  - __ Automatic transmission fluid (Tundra)
  - __ Ball joints and dust covers
  - __ Brake lines and hoses
  - __ Brake linings/drums and brake pads/discs
  - __ Drive belts
  - __ Drive shaft boots (all 4WD models and 2WD RAV4)
  - __ Exhaust pipes and mountings
  - __ Front differential oil (all 4WD except RAV4)
  - __ Limited-slip differential oil (Land Cruiser, 4WD RAV4)[1]
  - __ Rear differential oil (all models except 2WD RAV4)
  - __ Steering gear box
  - __ Steering wheel, linkage and boots

Additional Maintenance Items for Special Operating Conditions:*

- ❑ Inspect automatic transmission fluid (Land Cruiser, RAV4, Tacoma, 4Runner)
- ❑ Inspect engine air filter
- ❑ Inspect front differential oil (2WD and 4WD RAV4)
- ❑ Inspect nuts and bolts on chassis and body
- ❑ Replace automatic transmission fluid (Tundra)
- ❑ Replace front differential oil (all 4WD except RAV4)
- ❑ Replace rear differential oil (including limited-slip)

DEALER SERVICE VERIFICATION

Date: _____

Mileage: _____

TOYOTA
GENUINE PARTS

[1] If vehicle is equipped with limited-slip differential.

5,000-Mile Maintenance Intervals
7,500-Mile Maintenance Intervals

To determine the appropriate maintenance interval for your vehicle, see page 17.

80,000 Miles or 64 Months

❑ Replace engine oil and oil filter

Additional Maintenance Items for Special Operating Conditions:*

❑ Inspect the following:

__ Ball joints and dust covers
__ Brake linings/drums and brake pads/discs
__ Drive shaft boots
__ Engine air filter
__ Nuts and bolts on chassis and body
__ Steering wheel, linkage and boots

❑ Rotate tires
❑ Lubricate propeller shaft and re-torque bolt (all 4WD except RAV4)
❑ Re-torque drive shaft bolt (4WD RAV4)

DEALER SERVICE VERIFICATION

Date: _____

Mileage: _____

85,000 Miles or 68 Months

❑ Replace engine oil and oil filter

Additional Maintenance Items for Special Operating Conditions:*

❑ Inspect the following:

__ Ball joints and dust covers
__ Brake linings/drums and brake pads/discs
__ Drive shaft boots
__ Engine air filter
__ Nuts and bolts on chassis and body
__ Steering wheel, linkage and boots

❑ Rotate tires
❑ Lubricate propeller shaft and re-torque bolt (all 4WD except RAV4)
❑ Re-torque drive shaft bolt (4WD RAV4)

DEALER SERVICE VERIFICATION

Date: _____

Mileage: _____

82,500 Miles or 66 Months

❑ Replace engine oil and oil filter

❑ Rotate tires

DEALER SERVICE VERIFICATION

Date: _____

Mileage: _____

* Specific services apply to specific operating conditions. See pages 18–19 for details.

90,000 Miles or 72 Months

90,000 Miles or 72 Months

- ❑ Replace engine air filter
- ❑ Replace engine coolant
- ❑ Replace engine oil and oil filter
- ❑ Rotate tires
- ❑ Replace limited-slip differential oil (Land Cruiser)[1]
- ❑ Replace non-platinum spark plugs (Tacoma, Tundra, 4Runner)[2]
- ❑ Replace timing belt (except 4-cyl. Tacoma and 4Runner)
- ❑ Lubricate propeller shaft (all 4WD except RAV4)
- ❑ Lubricate wheel bearings (Tacoma 2WD)
- ❑ Lubricate wheel bearings and drive shaft bearings (Land Cruiser)
- ❑ Re-torque drive shaft bolt (4WD RAV4)
- ❑ Re-torque propeller shaft bolt (all models except RAV4)
- ❑ Inspect the following:
  - __ Ball joints and dust covers
  - __ Brake lines and hoses
  - __ Brake linings/drums and brake pads/discs
  - __ Drive belts
  - __ Drive shaft boots (all 4WD models and 2WD RAV4)
  - __ Exhaust pipes and mountings
  - __ Fuel lines and connections, fuel tank band and fuel tank vapor vent system hoses
  - __ Front differential oil
  - __ Fuel tank cap gasket
  - __ Limited-slip differential oil (4WD RAV4)[1]
  - __ Rear differential oil (all models except 2WD RAV4)
  - __ Steering gear box
  - __ Steering wheel, linkage and boots
  - __ Transfer case oil (4WD models)
  - __ Transmission fluid or oil

Additional Maintenance Items for Special Operating Conditions:*

- ❑ Inspect nuts and bolts on chassis and body
- ❑ Replace front differential oil (2WD RAV4 and all 4WD)
- ❑ Replace rear differential oil (including limited-slip)
- ❑ Replace transmission fluid or oil

DEALER SERVICE VERIFICATION

Date: _____

Mileage: _____

TOYOTA

QUALITY SERVICE

[1] If vehicle is equipped with limited-slip differential.

[2] Required under the terms of the Emission Control Warranty.

5,000-Mile Maintenance Intervals
7,500-Mile Maintenance Intervals

To determine the appropriate maintenance interval for your vehicle, see page 17.

95,000 Miles or 76 Months

❑ Replace engine oil and oil filter

Additional Maintenance Items for Special Operating Conditions:*

❑ Inspect the following:

__ Ball joints and dust covers
__ Brake linings/drums and brake pads/discs
__ Drive shaft boots
__ Engine air filter
__ Nuts and bolts on chassis and body
__ Steering wheel, linkage and boots

❑ Rotate tires
❑ Lubricate propeller shaft and re-torque bolt (all 4WD except RAV4)
❑ Re-torque drive shaft bolt (4WD RAV4)

DEALER SERVICE VERIFICATION

Date: _____

Mileage: _____

100,000 Miles or 80 Months

❑ Replace engine oil and oil filter

Additional Maintenance Items for Special Operating Conditions:*

❑ Inspect the following:

__ Ball joints and dust covers
__ Brake linings/drums and brake pads/discs
__ Drive shaft boots
__ Engine air filter
__ Nuts and bolts on chassis and body
__ Steering wheel, linkage and boots

❑ Rotate tires
❑ Lubricate propeller shaft and re-torque bolt (all 4WD except RAV4)
❑ Re-torque drive shaft bolt (4WD RAV4)

DEALER SERVICE VERIFICATION

Date: _____

Mileage: _____

97,500 Miles or 78 Months

❑ Replace engine oil and oil filter

❑ Rotate tires

DEALER SERVICE VERIFICATION

Date: _____

Mileage: _____

* Specific services apply to specific operating conditions. See pages 18–19 for details.

105,000 Miles or 84 Months

105,000 Miles or 84 Months

- ❑ Replace engine oil and oil filter
- ❑ Rotate tires
- ❑ Lubricate propeller shaft (all 4WD except RAV4)
- ❑ Re-torque drive shaft bolt (4WD RAV4))
- ❑ Re-torque propeller shaft bolt (all models except RAV4)
- ❑ Inspect the following:
  - __ Automatic transmission fluid (Tundra)
  - __ Ball joints and dust covers
  - __ Brake lines and hoses
  - __ Brake linings/drums and brake pads/discs
  - __ Drive belts
  - __ Drive shaft boots (all 4WD models and 2WD RAV4)
  - __ Exhaust pipes and mountings
  - __ Front differential oil (all 4WD except RAV4)
  - __ Limited-slip differential oil (Land Cruiser, 4WD RAV4)[1]
  - __ Rear differential oil (all models except 2WD RAV4)
  - __ Steering gear box
  - __ Steering wheel, linkage and boots

Additional Maintenance Items for Special Operating Conditions:*

- ❑ Inspect automatic transmission fluid (Land Cruiser, RAV4, Tacoma, 4Runner)
- ❑ Inspect engine air filter
- ❑ Inspect front differential oil (2WD and 4WD RAV4)
- ❑ Inspect nuts and bolts on chassis and body
- ❑ Replace automatic transmission fluid (Tundra)
- ❑ Replace front differential oil (all 4WD except RAV4)
- ❑ Replace rear differential oil (including limited-slip)

DEALER SERVICE VERIFICATION

Date: _____

Mileage: _____

[1] If vehicle is equipped with limited-slip differential.

5,000-Mile Maintenance Intervals
7,500-Mile Maintenance Intervals

To determine the appropriate maintenance interval for your vehicle, see page 17.

110,000 Miles or 88 Months

❑ Replace engine oil and oil filter

Additional Maintenance Items for Special Operating Conditions:*

❑ Inspect the following:

__ Ball joints and dust covers
__ Brake linings/drums and brake pads/discs
__ Drive shaft boots
__ Engine air filter
__ Nuts and bolts on chassis and body
__ Steering wheel, linkage and boots

❑ Rotate tires
❑ Lubricate propeller shaft and re-torque bolt (all 4WD except RAV4)
❑ Re-torque drive shaft bolt (4WD RAV4)

DEALER SERVICE VERIFICATION

Date: _____

Mileage: _____

115,000 Miles or 92 Months

❑ Replace engine oil and oil filter

Additional Maintenance Items for Special Operating Conditions:*

❑ Inspect the following:

__ Ball joints and dust covers
__ Brake linings/drums and brake pads/discs
__ Drive shaft boots
__ Engine air filter
__ Nuts and bolts on chassis and body
__ Steering wheel, linkage and boots

❑ Rotate tires
❑ Lubricate propeller shaft and re-torque bolt (all 4WD except RAV4)
❑ Re-torque drive shaft bolt (4WD RAV4)

DEALER SERVICE VERIFICATION

Date: _____

Mileage: _____

112,500 Miles or 90 Months

❑ Replace engine oil and oil filter

❑ Rotate tires

DEALER SERVICE VERIFICATION

Date: _____

Mileage: _____

* Specific services apply to specific operating conditions. See pages 18–19 for details.

120,000 Miles or 96 Months

120,000 Miles or 96 Months

- ❑ Replace engine air filter
- ❑ Replace engine coolant
- ❑ Replace engine oil and oil filter
- ❑ Rotate tires
- ❑ Replace limited-slip differential oil (Land Cruiser, RAV4)[1]
- ❑ Replace spark plugs (all models)[2]
- ❑ Lubricate propeller shaft (all 4WD except RAV4)
- ❑ Lubricate wheel bearings (Tacoma 2WD)
- ❑ Lubricate wheel bearings and drive shaft bearings (Land Cruiser)
- ❑ Re-torque drive shaft bolt (4WD RAV4)
- ❑ Re-torque propeller shaft bolt (all models except RAV4)
- ❑ Inspect the following:
  - __ Ball joints and dust covers
  - __ Brake lines and hoses
  - __ Brake linings/drums and brake pads/discs
  - __ Charcoal canister[3]
  - __ Drive belts
  - __ Drive shaft boots (all 4WD models and 2WD RAV4)
  - __ Engine valve clearance
  - __ Exhaust pipes and mountings
  - __ Front differential oil
  - __ Fuel lines and connections, fuel tank band and fuel tank vapor vent system hoses
  - __ Fuel tank cap gasket
  - __ Rear differential oil (all models except 2WD RAV4)
  - __ Steering gear box
  - __ Steering wheel, linkage and boots
  - __ Transfer case oil (4WD models)
  - __ Transmission fluid or oil

Additional Maintenance Items for Special Operating Conditions:*

- ❑ Inspect nuts and bolts on chassis and body
- ❑ Replace front differential oil (2WD RAV4 and all 4WD)
- ❑ Replace rear differential oil (including limited-slip)
- ❑ Replace transmission fluid or oil

DEALER SERVICE VERIFICATION

Date: _____

Mileage: _____

TOYOTA EXPRESS LUBE

[1] If vehicle is equipped with limited-slip differential.

[2] Required under the terms of the Emission Control Warranty.

[3] Inspect at 120,000 miles or 144 months, whichever comes first. Required only for vehicles in California, Massachusetts and New York.

Vehicle Identification

Model _____

Body style _____

Model year _____

In-service date _____

Mileage at delivery _____

Key number _____

Selling dealership _____

Selling dealership phone number _____

Vehicle identification number _____

TOYOTA | everyday



www.toyota.com

00400-02000-SMG3

Printed in U.S.A.
1/00

AC08Z–01

INSPECTION

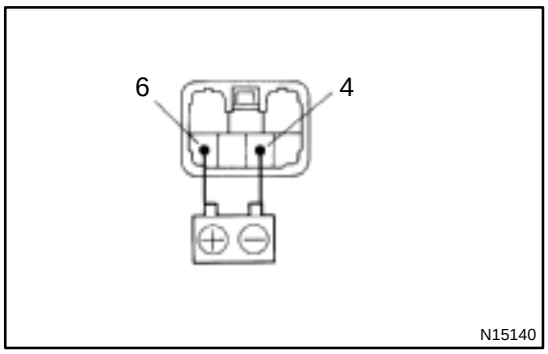

1. INSPECT A/C INDICATOR OPERATION

(a) Connect the positive (+) lead from the battery to terminal 6 and the negative (–) lead to terminal 4.

(b) Push the A/C button in and then check that the indicator lights up.

If operation is not as specified, replace the switch.

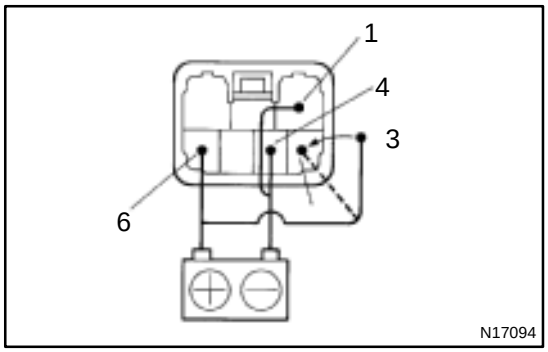

2. INSPECT DIMMING OPERATION

(a) Connect positive (+) lead from the battery to terminal 6 and negative (–) lead to terminal 4 and 1.

(b) Connect the positive (+) lead from the battery to terminal 3 and then check that the indicator dims.

If operation is not as specified, replace the switch.

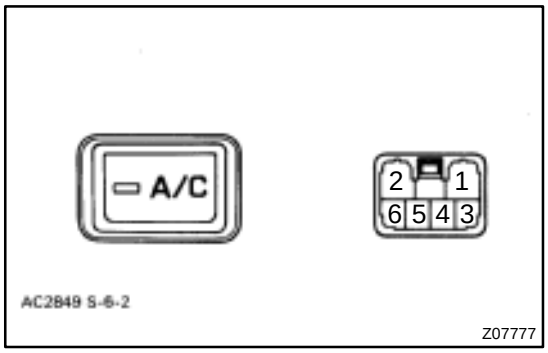

3. INSPECT A/C SWITCH CONTINUITY

Condition/Circuit	Tester connection	Specified condition
OFF	–	No continuity
ON	5 – 6	Continuity
Illumination circuit	3 – 1	Continuity

If operation is not as specified, replace the switch or test the bulb.

AC090–01

INSTALLATION

Installation is in the reverse order of removal (See page AC–83).

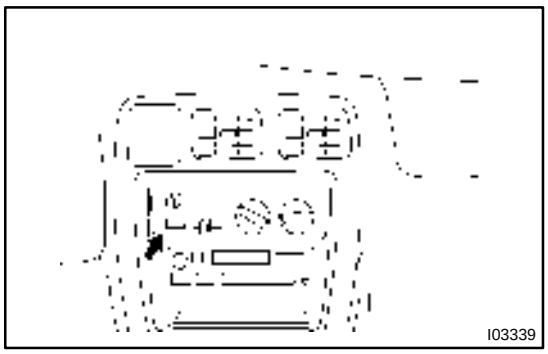

AIR CONDITIONING SWITCH

AC08Y–01

REMOVAL

REMOVE A/C SWITCH

(a) Cover the switch with a cloth.
(b) Using pliers, pull out the switch.

TROUBLESHOOTING

AC22A–01

PROBLEM SYMPTOMS TABLE

Use the table below to help you find the cause of the problem. The numbers indicate the priority of the likely cause of the problem. Check each part in order. If necessary replace these parts.

Symptom	Suspect Area	See page
No blower operation	11. HTR Fuse	–
	12. Heater main relay	AC–79
	13. Blower motor	AC–67
	14. Blower resistor	AC–70
	15. Blower speed control switch	AC–91
	16. Wire harness	–
No air temperature control	1. Engine coolant volume	–
	2. Heater control assembly	AC–86
	3. Water valve	AC–63
No compressor operation	1. Refrigerant volume	–
	2. A.C Fuse	–
	3. Magnetic clutch	AC–39
	4. Compressor	AC–39
	5. Pressure switch	AC–76
	6. Heater main relay	AC–79
	7. Blower speed control switch	AC–91
	8. A/C switch	AC–84
	9. A/C amplifier	AC–80
	10. Thermistor	AC–72
	11. Wire harness	–
Compressor operates intermittently	1. Refrigerant volume	AC–3
	2. Pressure switch	AC–76
	3. A/C switch	AC–84
	4. Thermistor	AC–72
	5. Wire harness	–
No cool air comes out	1. Refrigerant volume	AC–3
	2. Refrigerant pressure	AC–3
	3. Drive belt	AC–16
	4. Magnetic clutch	AC–39
	5. Compressor	AC–39
	6. Pressure switch	AC–76
	7. Thermistor	AC–72
	8. A/C switch	AC–84
	9. A/C amplifier	AC–80
	10. Heater control assembly	AC–86
	11. Wire harness	–
Insufficient cooling	1. Refrigerant volume	AC–3
	2. Drive belt	AC–16
	3. Magnetic clutch	AC–39
	4. Compressor	AC–39
	5. Condenser	AC–50
	6. Receiver	AC–47
	7. Expansion valve	AC–60
	8. Evaporator	AC–55
	9. Refrigerant lines	AC–21
	10. Pressure switch	AC–76
	11. A/C amplifier	AC–80
	12. Heater control assembly	AC–86

No engine idle–up when A/C switch ON	1. A/C amplifier 2. Idle control system 3. Wire harness	AC–80 *1 DI–132 *2 DI–297 –
No warm air comes out	1. Engine coolant volume 2. Heater control assembly 3. Water valve 4. Heater radiator	– AC–86 AC–63 AC–58

*1: 2RZ–FE and 3RZ–FE Engine Models
*2: 5VZ–FE Engine Models

AC093–01

INSTALLATION

Installation is in the reverse order of removal (See page AC–81).

Wire Harness Side

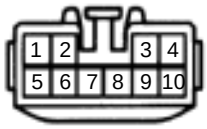

e-10-1 Z15513

AIR CONDITIONING AMPLIFIER

AC091–01

ON–VEHICLE INSPECTION

INSPECT AMPLIFIER CIRCUIT

(a) Remove the glove compartment door (See page BO–47).

(b) Disconnect the amplifier connector and inspect the connector on wire harness side, as shown in the chart below.
Test conditions:
- Turn ignition switch to ON
- Blower speed switch HI

Tester connection	Condition	Specified condition
4 – Ground	Constant	Continuity
6 – 2	Constant	Continuity
2 – 10	Evaporator temperature at 25 °C (77 °F)	Approx. 1.5 kΩ at 25 °C (77 °F)
5 – Ground	A/C switch ON	Battery positive voltage
5 – Ground	A/C switch OFF	No voltage

If the circuit is not as specified, inspect the circuits connected to other parts.

From Back Side

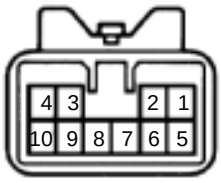

e-10-2 Z15514

(c) Connect the connector to amplifier and inspect wire harness side connector from the back side, as shown in the chart below.
Test conditions
- Running engine at idle speed
- Blower speed switch at ”HI” position
- A/C switch ON
- Temperature control lever at ”COOL” position
- Set on manifold gauge set

Tester connection	Condition	Specified condition
1 – Ground	Refrigerant pressure 196 – 1,340 kPa	Battery positive voltage
1 – Ground	Refrigerant pressure less than 196 or more than 3,140 kPa	No voltage
3 – Ground	Magnetic clutch engaged	Battery voltage
3 – Ground	Magnetic clutch not engaged	Below 1.0 V
8 – Ground	Engine speed at idle speed	Below 0.7 V
8 – Ground	Engine speed at idle–up speed	No voltage
9 – Ground	Magnetic clutch engaged	Below 1.0 V
9 – Ground	Magnetic clutch not engaged	No voltage

If circuit is as specified, try replacing the amplifier with a new one. If the circuit is not as specified, inspect the circuits connected to other parts.

AC092–01

REMOVAL

1. REMOVE GLOVE COMPARTMENT DOOR
(See page BO–47)

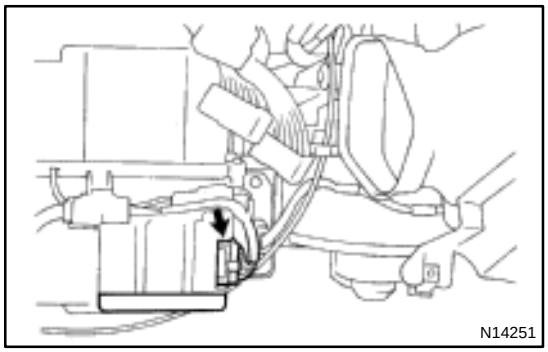
N14251

2. REMOVE AMPLIFIER

(a) Disconnect the connector from the amplifier.
(b) Remove amplifier cover.
(c) Remove the amplifier from the cooling unit.

AC08L–01

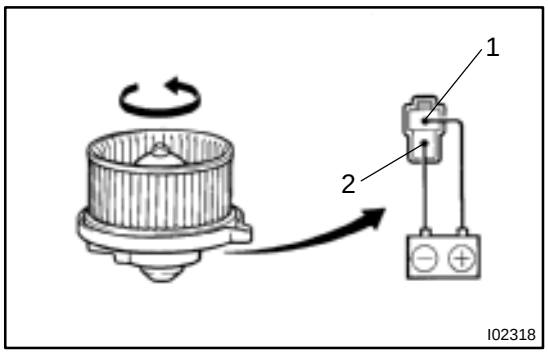

INSPECTION

INSPECT BLOWER MOTOR OPERATION

Connect the positive (+) lead from the battery to terminal 1 and the negative (–) lead to terminal 2, then check that the motor operations smoothly.

If operation is not as specified, replace the blower motor.

AC08M–01

INSTALLATION

Installation is in the reverse order of removal (See page AC–66).

BLOWER MOTOR

AC08K–01

REMOVAL

1. REMOVE GLOVE COMPARTMENT DOOR
(See page BO–47)

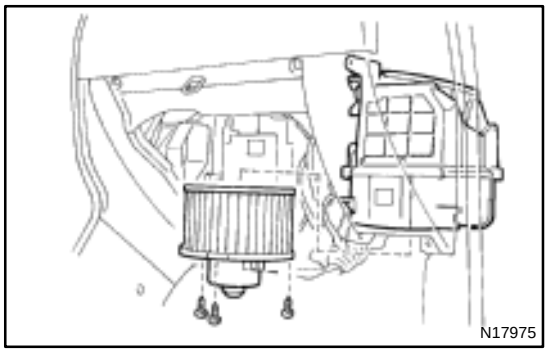

2. REMOVE BLOWER MOTOR

(a) Disconnect the connector.

(b) Remove the 3 screws and motor.

AC08O–01

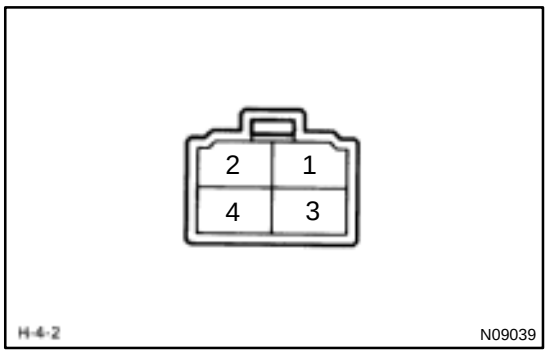

INSPECTION

INSPECT BLOWER RESISTOR RESISTANCE

Tester connection	Condition	Specified condition
1–4	Constant	2.2 ± 0.1 Ω
1–3	Constant	1.2 ± 0.2 Ω
1–2	Constant	1.8 ± 0.2 Ω

If resistance is not as specified, replace the blower resistor.

AC08P–01

INSTALLATION

Installation is in the reverse order of removal (See page AC–69).

BLOWER RESISTOR

AC08N–01

REMOVAL

1. REMOVE GLOVE COMPARTMENT DOOR
(See page BO–47)

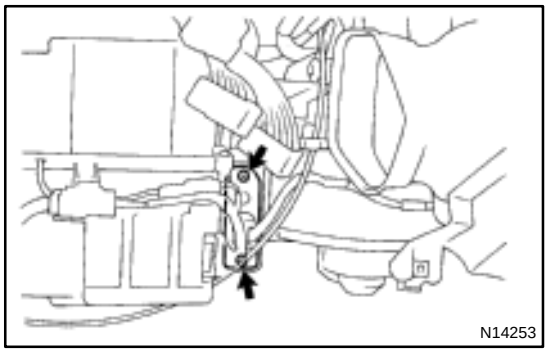

2. REMOVE BLOWER RESISTOR

(a) Disconnect the connector.

(b) Remove the 2 screws and blower resistor.

BLOWER UNIT

COMPONENTS

AC07R–01

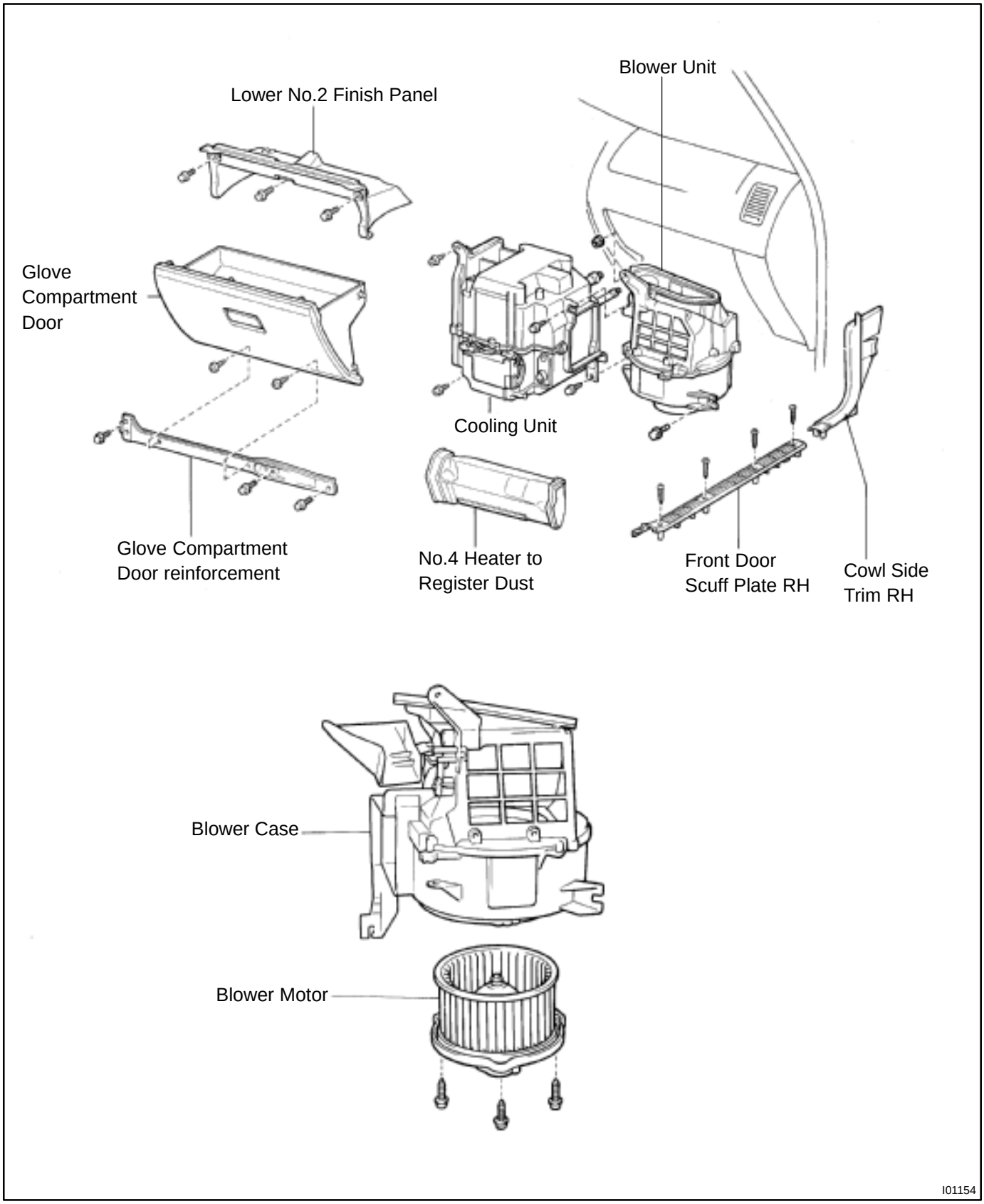

AC07T–01

DISASSEMBLY

REMOVE BLOWER MOTOR

Remove the 3 screws and blower motor.

AC07V–01

INSTALLATION

Installation is in the reverse order of removal (See page AC–35).

AC07U–01

REASSEMBLY

Reassembly is in the reverse order of disassembly (See page AC–36).

AC07S–01

REMOVAL

1. REMOVE THESE PARTS:

(a) Glove compartment door
(b) Glove compartment door reinforcement
(c) Lower No.2 finish panel
(d) No.4 heater to register duct
(e) Front door scuff plate RH
(f) Cowl side trim RH
(g) Cooling unit
(See page AC–25)

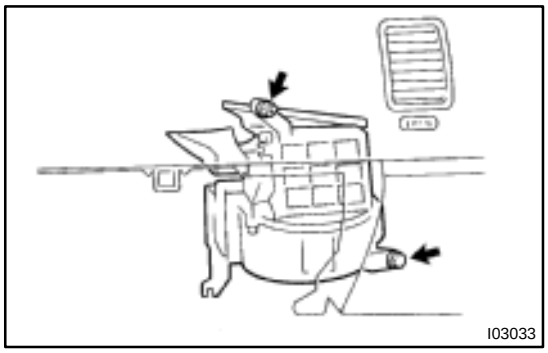

2. REMOVE BLOWER UNIT

(a) Disconnect the connector from the blower motor.
(b) Disconnect the air inlet damper control cable from the blower motor.

HINT:
At the time of installation, please refer to the following item.
For installing the control cable, refer to ”INSTALLATION” of ”HEATER CONTROL ASSEMBLY” on page AC–93.

(c) Remove the nut, bolt and blower unit.

AC07X–01

COMPONENTS

2RZ–FE and 3RZ–FE Engine Models:

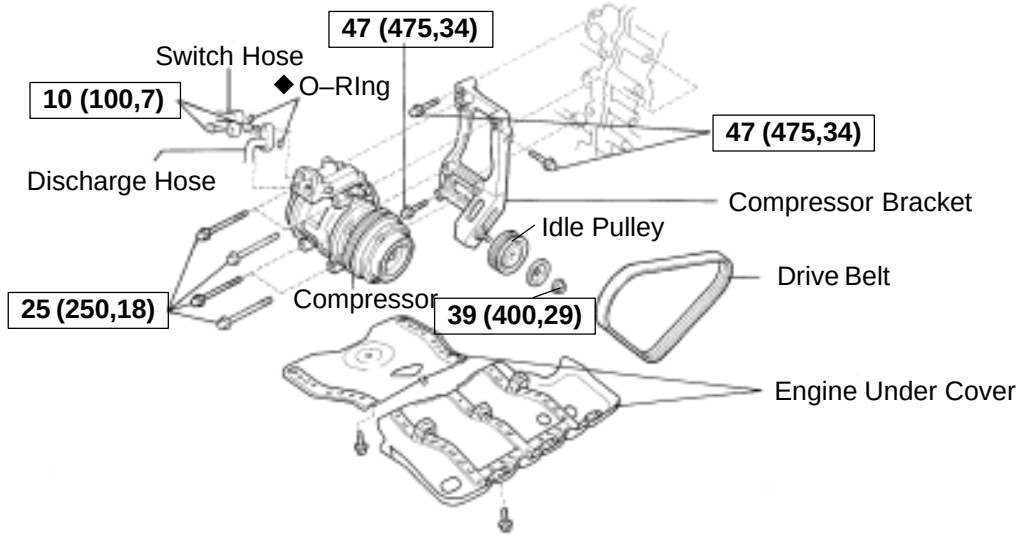

5VZ–FE Engine Models:

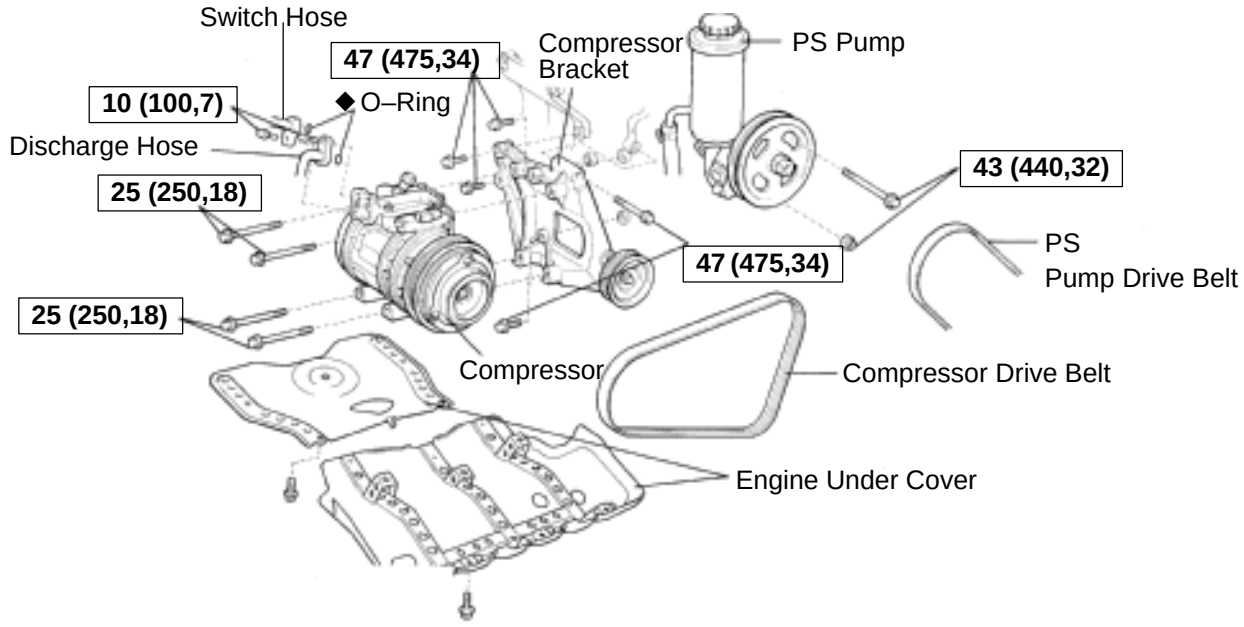

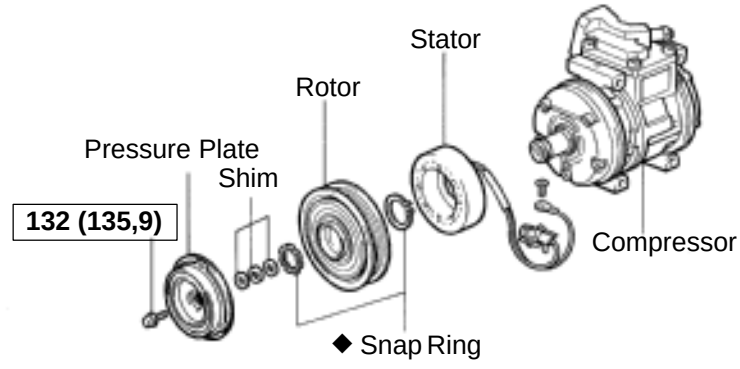

N17876
N17875
N12543

N·m (kgf·cm,ft·lbf): Specified torque

◆ Non–reusable part

I00909

AC07Z–01

DISASSEMBLY

1. REMOVE PRESSURE PLATE

(a) Using SST and a socket wrench, remove the shaft bolt.
Torque: 13.2 N·m (135 kgf·cm, 9 ft·lbf)

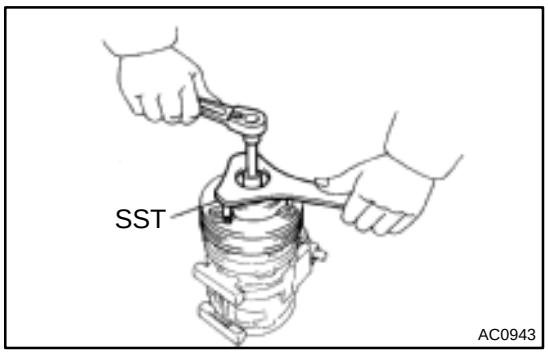

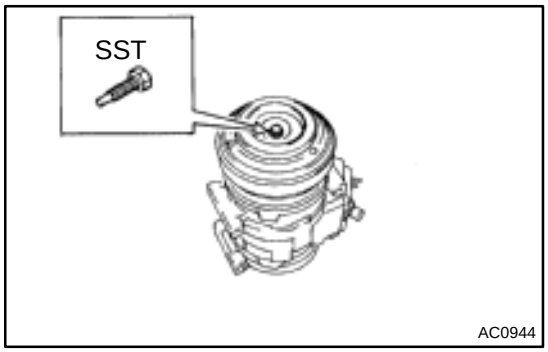

(b) Install SST on the pressure palate.
SST 07112–66040

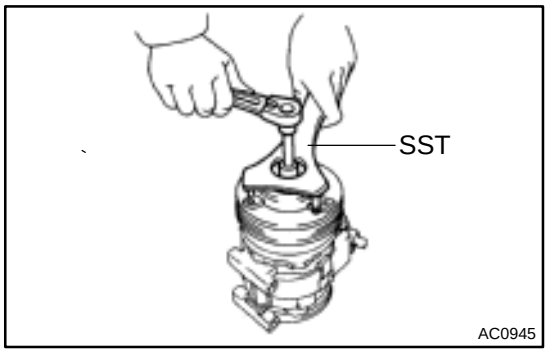

(c) Using SST and socket wrench, remove the pressure plate.
SST 07112–76060

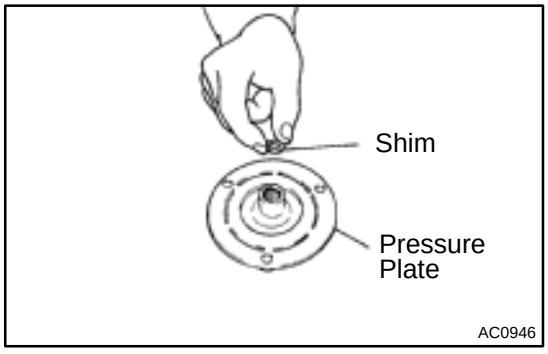

(d) Remove the shims from the pressure palate.

2. REMOVE ROTOR

(a) Using SST, remove the snap ring.
SST 07114–84020

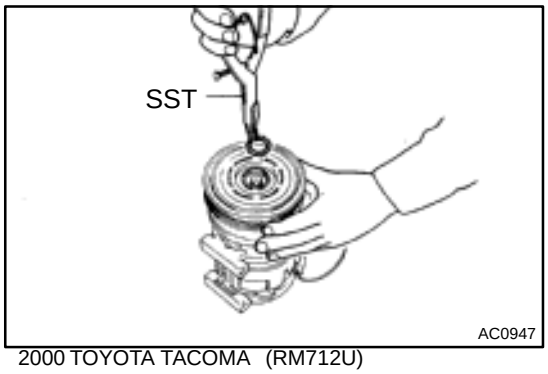

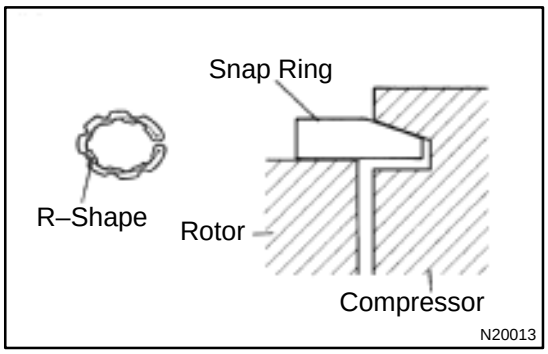

NOTICE:
At the time of reassembly, please refer to the following item.
The snap ring should be installed so that beveled side faces up.

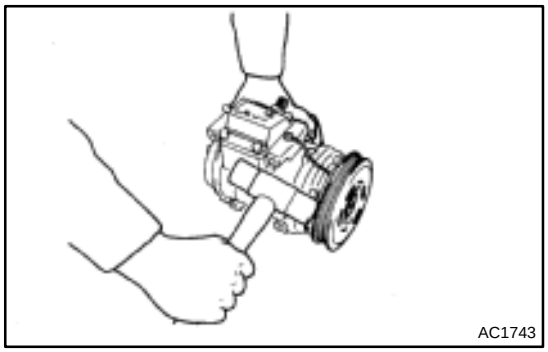

(b) Using a plastic hammer, tap the rotor off the shaft.

NOTICE:
Be careful not to damage the pulley when tapping on the rotor.

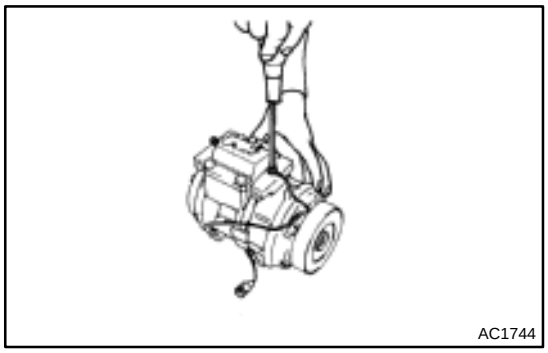

3. REMOVE STATOR

(a) Disconnect the stator lead wire from the compressor housing.

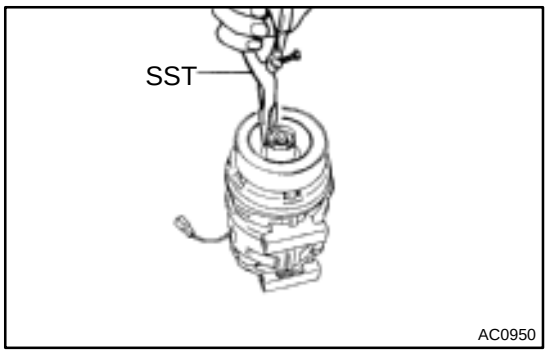

(b) Using SST, remove the snap ring.
SST 07114–84020

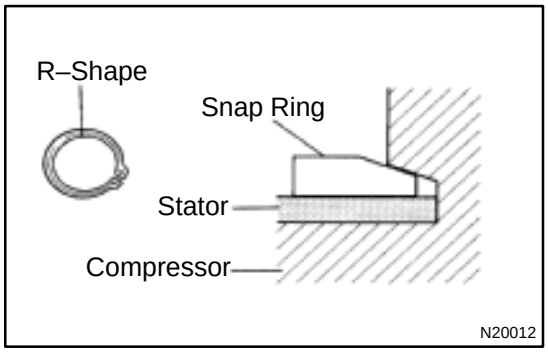

NOTICE:
At the time of reassembly, please refer to the following item.
The snap ring should be installed so that its beveled side faces up.

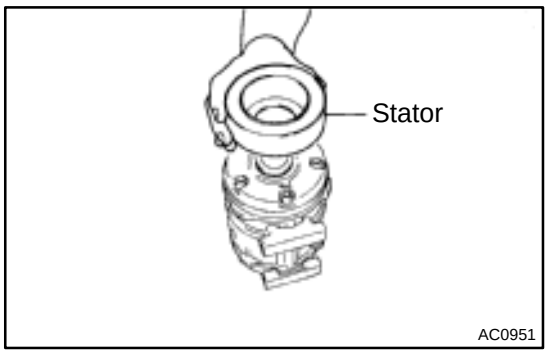

(c) Remove the stator.

AC081–01

INSTALLATION

1. INSTALL COMPRESSOR

(a) Install the compressor with 4 bolts.
Torque: 25 N·m (250 kgf·cm, 18 ft·lbf)

(b) Connect the connector.

2. CONNECT DISCHARGE AND SUCTION HOSES

Connect the both hoses with the 2 bolts.
Torque: 10 N·m (100 kgf·cm, 7 ft·lbf)

NOTICE:

Hose should be connected immediately after the caps have been removed.

HINT:

Lubricate 2 new O–rings with compressor oil and install the hoses.

3. INSTALL AND CHECK DRIVE BELT
(See page AC–18)

4. INSTALL ENGINE UNDER COVER

5. 5VZ– FE Engine Models:
INSTALL PS PUMP SET BOLT AND NUT
Torque: 43 N·m (440 kgf·cm, 32 ft·lbf)

6. CONNECT NEGATIVE (–) TERMINAL CABLE TO BATTERY

7. EVACUATE AIR FROM REFRIGERATION SYSTEM

8. CHARGE SYSTEM WITH REFRIGERANT
Specified amount: 600 ± 50 g (21.16 ± 1.76 oz.)

9. INSPECT FOR LEAKAGE OF REFRIGERANT

Using a gas leak detector, check for leakage of refrigerant.
If there is leakage, check the tightening torque at the joints.

10. INSPECT A/C OPERATION

COMPRESSOR AND MAGNETIC CLUTCH

AC07W–01

ON–VEHICLE INSPECTION

1. SET ON MANIFOLD GAUGE SET
(See page AC–19)

2. START ENGINE

3. INSPECT COMPRESSOR FOR METALLIC SOUND

Check if there is an abnormal metallic sound from the compressor when the A/C switch is on.

If abnormal metallic sound is heard, replace the compressor assembly.

4. INSPECT REFRIGERANT PRESSURE

See ”ON–VEHICLE INSPECTION” of AIR CONDITIONING SYSTEM on page AC–3.

5. STOP ENGINE

6. INSPECT VISUALLY FOR LEAKAGE OF REFRIGERANT FROM SAFETY SEAL

Using a gas leak detector, check for leakage of refrigerant.

If there is any leakage, replace the compressor assembly.

7. SET OFF MANIFOLD GAUGE SET
(See page AC–20)

8. MAKE THESE VISUAL CHECK:

(a) Leakage of grease from the clutch bearing.

(b) Signs of oil on the pressure plate

Repair or replace, as necessary.

9. INSPECT MAGNETIC CLUTCH BEARING FOR NOISE

(a) Start engine.

(b) Check for abnormal noise from near the compressor when the A/C switch is OFF.

If abnormal noise is being emitted, replace the magnetic clutch.

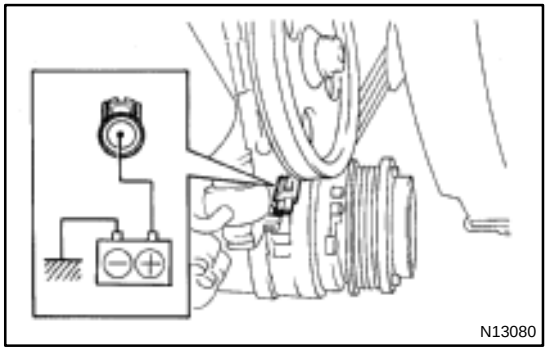

10. INSPECT MAGNETIC CLUTCH OPERATION

(a) Disconnect the connector.

(b) Connect the positive (+) lead from the battery to terminal on the magnetic clutch connector and the negative (–) lead to the body ground.

(c) Check that the magnetic clutch is energized.

If operation is not as specified, replace the magnetic clutch.

AC080–01

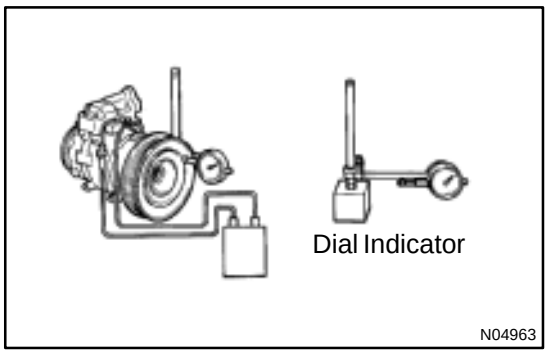

REASSEMBLY

Reassembly is in the reverse order of disassembly.

HINT:

After reassembly, check clearance of magnetic clutch.

(d) Set the dial indicator to the pressure plate of the magnetic clutch.

(e) Connect the magnetic clutch lead wire to the positive (+) terminal of the battery.

(f) Check the clearance between the pressure plate and rotor when connecting the negative (–) terminal to the battery.

Standard clearance:

0.5 ± 0.15 mm (0.020 ± 0.0059 in.)

If the clearance is not within the standard clearance, adjust the clearance using shims to obtain the standard clearance.

Shim thickness:

0.1 mm (0.004 in.)

0.3 mm (0.012 in.)

0.5 mm (0.020 in.)

AC07Y–01

REMOVAL

1. RUN ENGINE AT IDLE SPEED WITH A/C ON FOR APPROX. 10 MINUTES WITH A/C ON

2. STOP ENGINE

3. DISCONNECT NEGATIVE (–) TERMINAL CABLE FROM BATTERY

4. DISCHARGE REFRIGERANT FROM REFRIGERATION SYSTEM

5. REMOVE ENGINE UNDER COVER

6. DISCONNECT DISCHARGE AND SUCTION HOSES

Remove the 2 bolts and disconnect the both hoses.

NOTICE:

Cap the open fitting immediately to keep moisture or dirt out of the system.

7. REMOVE DRIVE BELT

(See page AC–17)

8. 5VZ–FE Engine Models:
REMOVE PS PUMP SET BOLT AND NUT

9. REMOVE COMPRESSOR

(a) Disconnect the connector.

(b) Remove the 4 bolts and compressor.

AC087–01

INSTALLATION

Installation is in the reverse order of removal (See page AC–51).

AC086–01

REMOVAL

1. DISCHARGE REFRIGERANT FROM REFRIGERATION SYSTEM

HINT:

At the time of installation, please refer to the following item.

Evacuate air from refrigeration system.

Charge system with refrigerant and inspect for leakage of refrigerant.

Specified amount: 600 ± 50 g (21.16 ± 1.76 oz.)

2. REMOVE THESE PARTS:

(a) Radiator grille

(b) Horns

(c) Hood lock set bolts

(d) Center brace

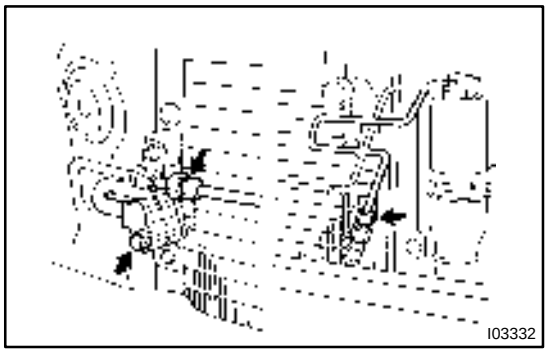

3. REMOVE 2 LIQUID TUBES

(a) Remove the 2 bolts and disconnect the liquid tubes from receiver.

Torque: 6.0 N·m (60 kgf·cm, 52 in.·lbf)

NOTICE:

Cap the open fittings immediately to keep moisture or dirt out of the system.

HINT:

At the time of installation, please refer to the following item.

Lubricate 2 new O–rings with compressor oil and install the tubes.

(b) Loosen the 2 nuts and remove the 2 liquid tubes.

Torque: 14 N·m (140 kgf·cm, 10 ft·lbf)

NOTICE:

Cap the open fittings immediately to keep moisture or dirt out of the system.

HINT:

At the time of installation, please refer to the following item.

Lubricate 2 new O–rings with compressor oil and install the tubes.

4. DISCONNECT DISCHARGE HOSE FROM CONDENSER

(a) Remove the piping clamp set bolt.

(b) Remove the bolt and disconnect the hose.

Torque: 10 N·m (100 kgf·cm, 7 ft·lbf)

NOTICE:

Cap the open fitting immediately to keep moisture or dirt out of the system.

HINT:

At the time of installation, please refer to the following item.

Lubricate a new O–rings with compressor oil and install the tubes.

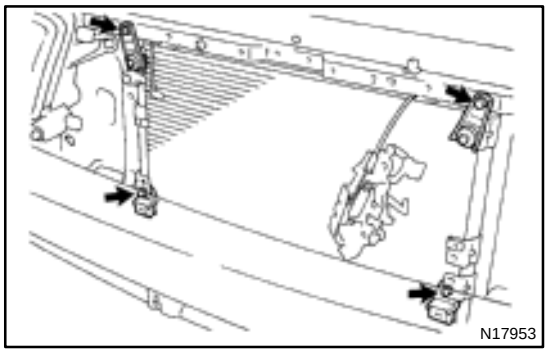

5. REMOVE CONDENSER

(a) Remove the liquid tube clamping bolt.

(b) Remove the 2 condenser mounting bolts and pull out the condenser.

HINT:

At the time of installation, please refer to the following item.

If condenser is replaced, add compressor oil to the condenser.

ADD 40 – 50 cc (1.4 – 1.7 fl.oz.)

Compressor oil: ND–OIL 8 or equivalent

COOLING UNIT

COMPONENTS

AC07H–01

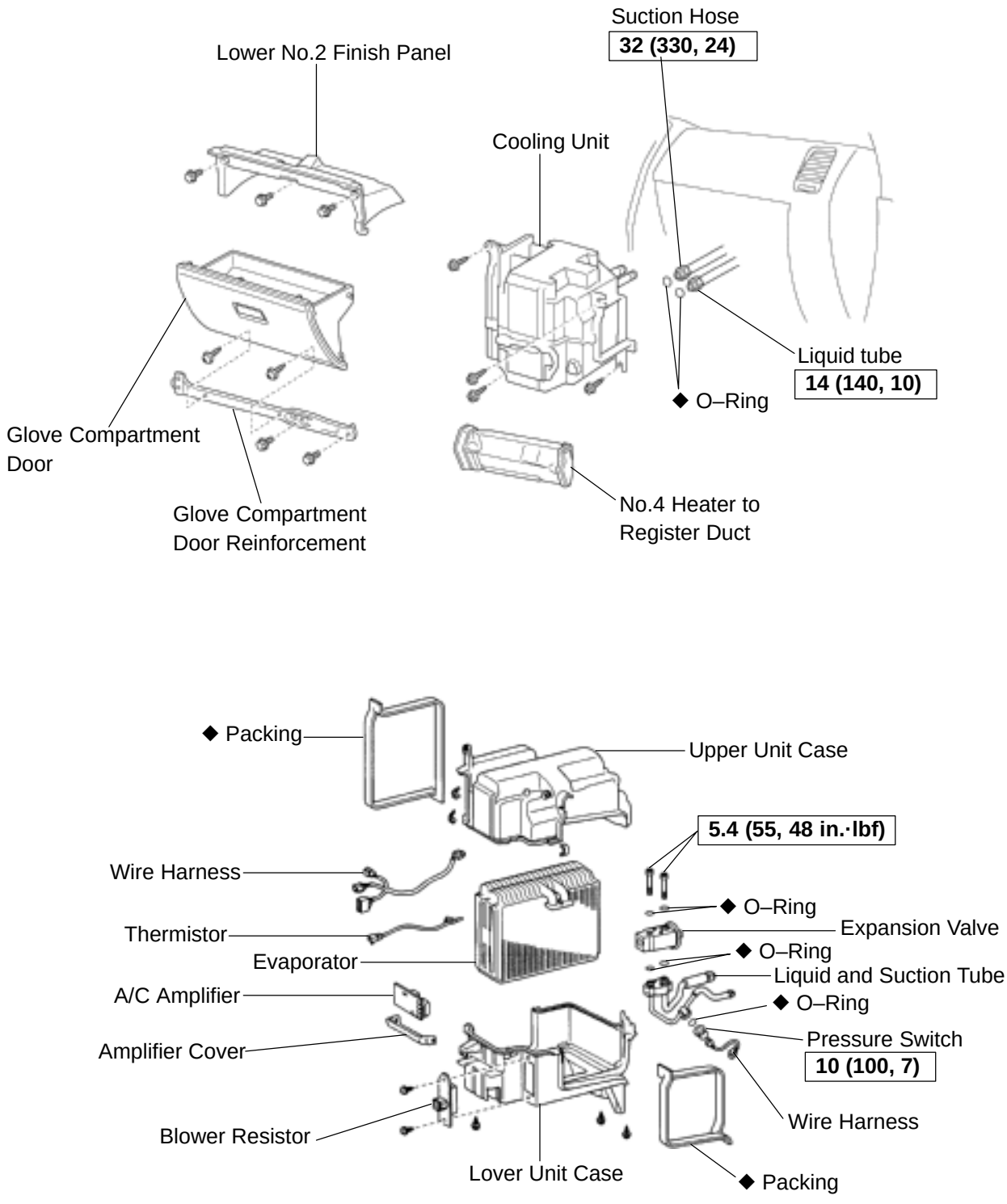

N·m (kgf·cm, ft·lbf) : Specified torque
◆ Non– reusable part

I02737

AC07J–01

DISASSEMBLY

1. REMOVE THESE PARTS:

(a) A/C amplifier.

(b) Wire harness.

2. REMOVE BLOWER RESISTOR

Remove the 2 screws and blower resistor.

3. SEPARATE UPPER AND LOWER UNIT CASES

(a) Using a knife, cut off the each packing.

(b) Remove 3 clips and 3 screws.

(c) Separate the upper and lower unit case.

4. REMOVE EVAPORATOR FROM LOWER UNIT CASE

HINT:

At the time of reassembly, please refer to the following item.

If evaporator is replaced, add compressor oil to evaporator.

Add 40 – 50 cc (1.4 –1.7 fl.oz.)

Compressor oil: ND–OIL 8 or equivalent

5. REMOVE THERMISTOR

Pull out the thermistor from evaporator.

6. REMOVE PRESSURE SWITCH FROM LIQUID TUBE

Torque: 10 N·m (100 kgf·cm, 7 ft·lbf)

HINT:

- Lock the switch mount on the tube with an opened wrench, being careful not to deform the tube and remove the switch.
- At the time of reassembly, please refer to the following item.
  Lubricate a new O–ring with compressor oil and install the switch.

7. REMOVE EXPANSION VALVE

Using a hexagon wrench, remove the 2 bolts and separate the expansion valve evaporator, liquid and suction tube.

Torque: 5.4 N·m (55 kgf·cm, 48 in.·lbf)

HINT:

At the time of reassembly, please refer to the following item.

Lubricate 4 new O–rings with compressor oil and install the valve and tubes.

AC07L–01

INSTALLATION

Installation is in the reverse order of removal (See page AC–25).

AC07K–01

REASSEMBLY

Reassembly is in the reverse order of disassembly (See page AC–26).

AC07I–01

REMOVAL

1. DISCHARGE REFRIGERANT FROM REFRIGERATION SYSTEM

HINT:

At the time of installation, please refer to the following item.

Evacuate air from refrigeration system.

Charge system with refrigerant and inspect for leakage of refrigerant.

Specified amount: 600 ± 50 g (21.16 ± 1.76 oz.)

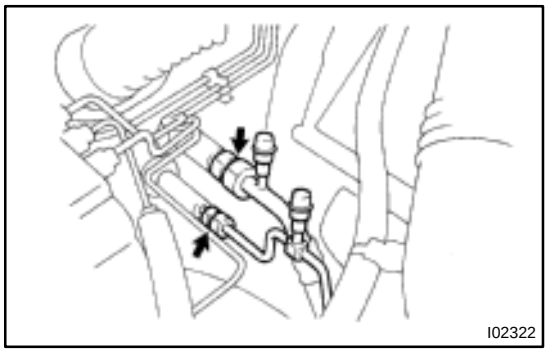
I02322

2. DISCONNECT SUCTION TUBE AND LIQUID TUBE FROM COOLING UNIT FITTINGS

Torque:

Liquid tube: 14 N·m (140 kgf·cm, 10 ft·lbf)

Suction tube: 32 N·m (330 kgf·cm, 24 ft·lbf)

NOTICE:

Cap the open fittings immediately to keep moisture or dirt out of the system.

HINT:

At the time of installation, please refer to the following item.

Lubricate 2 new O–rings with compressor oil and install the tubes.

3. REMOVE 2 GROMMETS

4. REMOVE DRAIN PIPE GROMMET

5. REMOVE THESE PARTS:

(a) Glove compartment door

(b) Glove compartment door reinforcement

(c) Lower No. 2 finish panel

(d) No. 4 heater to register duct

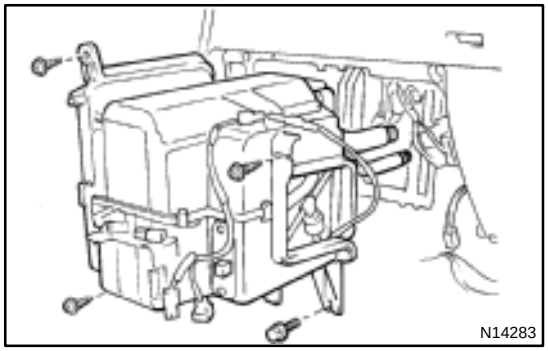
N14283

6. REMOVE COOLING UNIT

(a) Disconnect the connectors.

(b) Remove the 3 screws, bolt and the cooling unit.

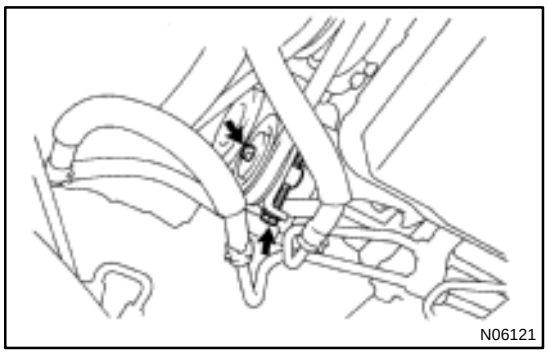
N06121

AC07B–01

INSTALLATION

1. **TIGHTEN IDLE PULLEY LOCK NUT TEMPORALLY**
   Torque: 2.5 N·m (25 kgf·cm, 22 in.·lbf)
2. **INSTALL DRIVE BELT**
3. **USING ADJUSTING BOLT, ADJUST DRIVE BELT TENSION**
   Drive belt tension
   New belt: 160 ± 25 lbf
   Used belt: 100 ± 25 lbf
4. **TIGHTEN IDLE PULLEY LOCK NUT**
   Torque: 39 N·m (400 kgf·cm, 29 ft·lbf)
5. **INSTALL PS PUMP DRIVE BELT**
6. **INSTALL ENGINE UNDER COVER**

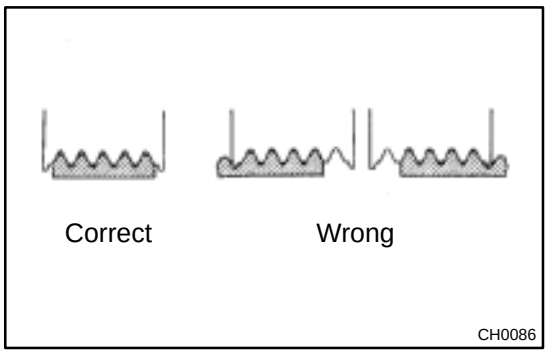

DRIVE BELT

AC079–01

ON–VEHICLE INSPECTION

1. INSPECT DRIVE BELT'S INSTALLATION CONDITION

Check that the drive belt fits properly in the ribbed grooves.

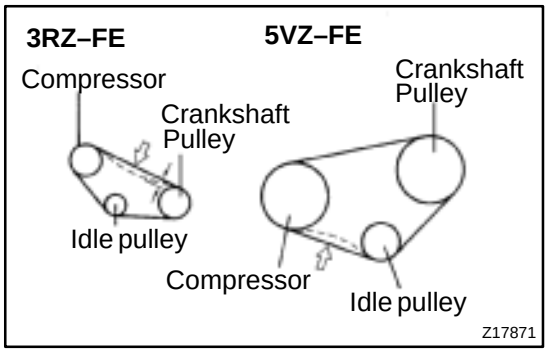

2. INSPECT DRIVE BELT TENSION

Using a belt tension gauge, check the drive belt tension.

Drive belt tension:

New belt 160 ± 25 lbf

Used belt 100 ± 20 lbf

HINT:

- "New belt" refers to a belt which has been used less than 5 minutes on a running engine.
- "Used belt" refers to a belt which has been used on a running engine for 5 minutes or more.
- After installing the drive belt, check that it fits properly in the ribbed grooves.

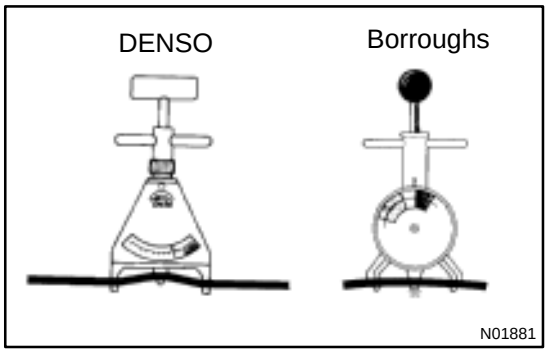

AC07A–01

REMOVAL

1. **REMOVE PS PUMP DRIVE BELT**
   2RZ–FE and 3RZ–FE: (See page SR–40)
   5VZ–FE: (See page SR–50)
2. **REMOVE ENGINE UNDER COVER**

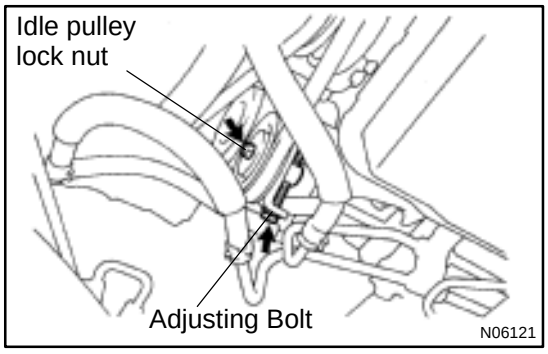

3. **LOOSEN IDLE PULLEY LOCK NUT**
   Torque: 39 N·m (400 kgf·cm, 29 ft·lbf)
4. **REMOVE COMPRESSOR DRIVE BELT**

Loosen drive belt tension by adjusting bolt and remove the drive belt.

AC089–01

INSPECTION

1. CHECK EVAPORATOR FINS FOR BLOCKAGE

If the fins are clogged, clean them wth compressed air.

2. CHECK FITTING FOR CRACKS FOR SCRATCHES

Repair as necessary.

AC08A–01

INSTALLATION

Installation is in the reverse order of removal (See page AC–54).

EVAPORATOR

AC088–01

REMOVAL

1. REMOVE COOLING UNIT

(See page AC–25)

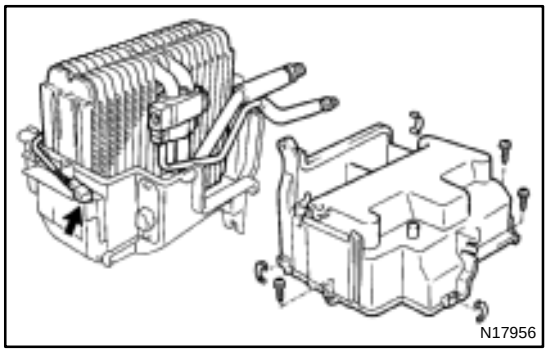

2. REMOVE EVAPORATOR

(a) Using a knife, cut off each packing.

(b) Remove the 3 screws and 3 clips, then separate the upper and lower case.

(c) Disconnect the connector clamp.

(d) Remove the evaporator.

HINT:

At the time of installation, please refer to the following item.

If evaporator is replaced, add compressor oil to evaporator.

Add 40 cc (1.4 fl.oz.)

Compressor oil: ND–OIL 8 or equivalent

AC08G–01

INSTALLATION

Installation is in the reverse order of removal (See page AC–61).

EXPANSION VALVE

AC08E–01

ON–VEHICLE INSPECTION

1. CHECK QUANTITY OF GAS DURING REFRIGERATION CYCLE

2. SET ON MANIFOLD GAUGE SET

(See page AC–19)

3. RUN ENGINE

(a) Run the engine at 1,500 rpm for at least 5 minutes.

(b) Then check that the high pressure reading is 1.37 – 1.57 MPa (14 – 16 kgf/cm^2, 199 – 228 psi).

4. CHECK EXPANSION VALVE

If the expansion valve is faulty, the low pressure reading will drop to 0 kPa (0 kgf/cm^2, 0 psi).

HINT:

When the low pressure drops to 0 kPa (0 kgf/cm^2, 0 psi), check the receiver's IN and OUT sides for no temperature difference.

AC08F–01

REMOVAL

1. REMOVE EVAPORATOR

(See page AC–54)

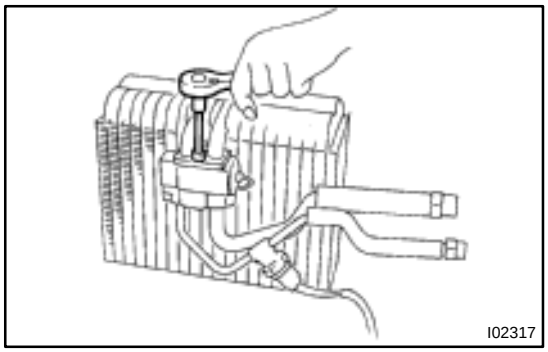

2. REMOVE EXPANSION VALVE

Using a hexagon wrench, remove the 2 bolts and separate the expansion valve and evaporator and tubes.

Torque: 5.4 N·m (55 kgf·cm, 48 in.·lbf)

HINT:

At the time of installation, please refer to the following item.

Lubricate 4 new O–rings with compressor oil and install the tubes and valve.

AC095–01

COMPONENTS

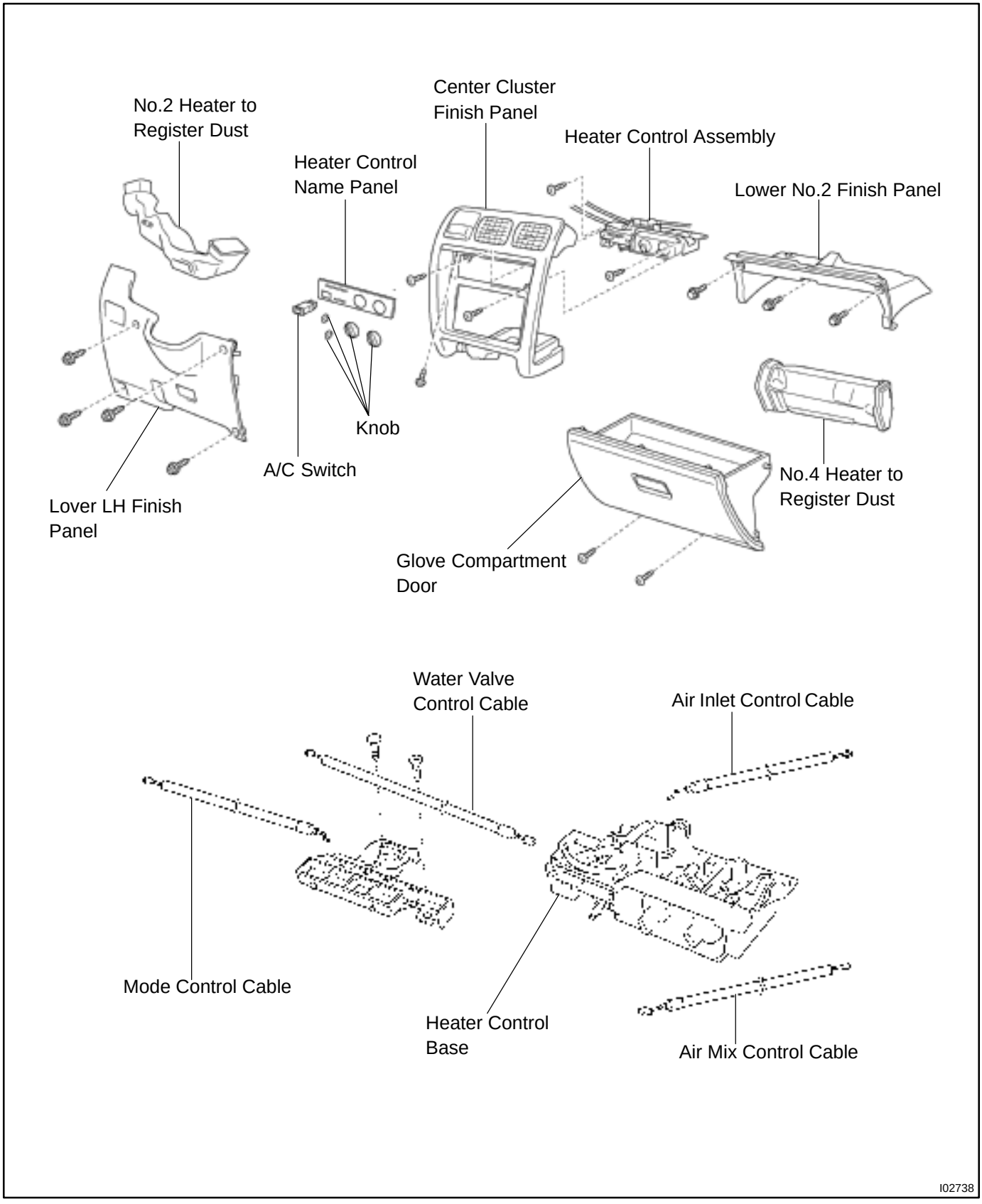

AC097–01

DISASSEMBLY

1. REMOVE BULB

2. REMOVE HEATER CONTROL CABLES

(a) Using a screwdriver, spread the claw of the cable clamp and diconnect the outer cable.

HINT:

Tape the screwdriver tip before use.

(b) Remove the inner cable from the heater control base.

AC098–01

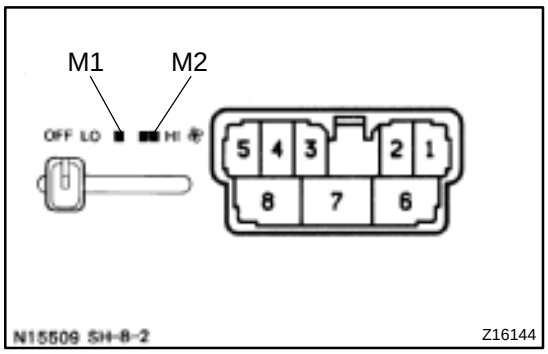

INSPECTION

INSPECT BLOWER SPEED CONTROL SWITCH CONTINUITY

Position/ Circuit	Tester connection	Specified condition
OFF	–	No continuity
LO	6 – 5	Continuity
M1	1 – 5 – 6	Continuity
M2	2 – 5 – 6	Continuity
Illumination circuit	3 – 4	Continuity

If continuity is not as specified, replace the heater control assembly or test the bulb.

AC09A–01

INSTALLATION

Installation is in the reverse order of removal (See page AC–88).

HINT:

After installation, adjust the heater control cables.

(a) Set hater control assembly in these conditions:
  (1) Set heater control assembly at ”FRESH” position.
  (2) Mode control dial at ”FACE” position
  (3) Temperature control dial at ”COOL” position

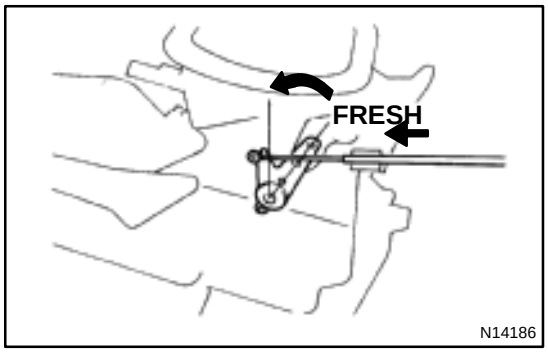

(b) Adjust air inlet control cable.
Pull the mode control link at ”FRESH” position, connect the control cable and lock the clamp.

HINT:

Lock the clamp during lightly pushing the outer cable in the direction, as shown in the illustration.

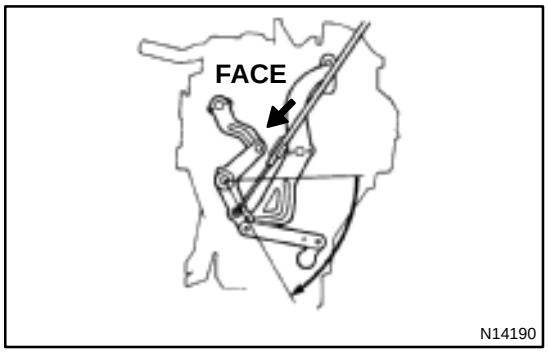

(c) Adjust mode control cable.
Pull the mode control link at ”FACE” position, connect the control cable and lock the clamp.

HINT:

Lock the clamp during lightly pushing the outer cable in the direction, as shown in the illustration.

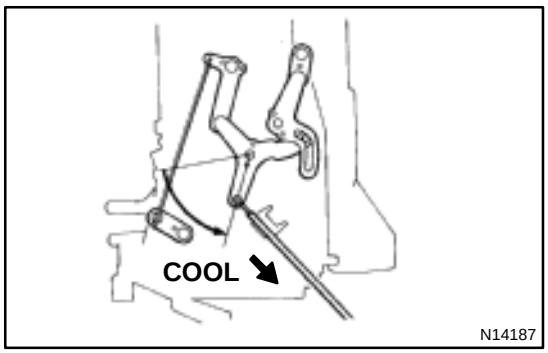

(d) Adjust air mix control cable.
Pull the air mix link at ”COOL” position, connect the control cable and lock the clamp.

HINT:

Lock the clamp during lightly pushing the outer cable in the direction, as shown in the illustration.

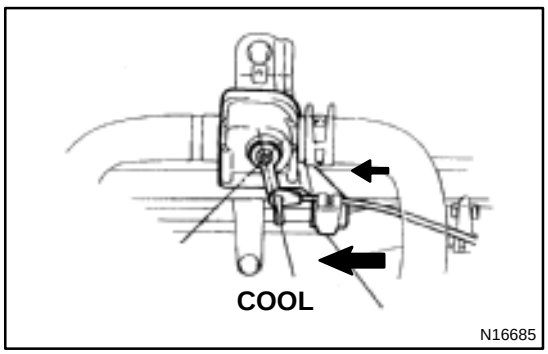

(e) Adjust water valve control cable.
Pull the water valve control lever at ”COOL” position, connect the control cable and lock the clamp.

HINT:

Lock the clamp during lightly pushing the outer cable in the direction, as shown in the illustration.

HEATER CONTROL ASSEMBLY

AC094–01

ON–VEHICLE INSPECTION

INSPECT HEATER CONTROL LEVER AND DIALS OPERATION

Move the control lever and dials left and right check for stiffness and binding the full range of the lever and dials.

AC099–01

REASSEMBLY

Reassembly is in the reverse order of disassembly (See page AC–90).

AC096–01

REMOVAL

1. REMOVE THESE PARTS:

(a) Lower finish panel
(b) Glove compartment door
(c) No.2 Lower finish panel
(See page BO–47)

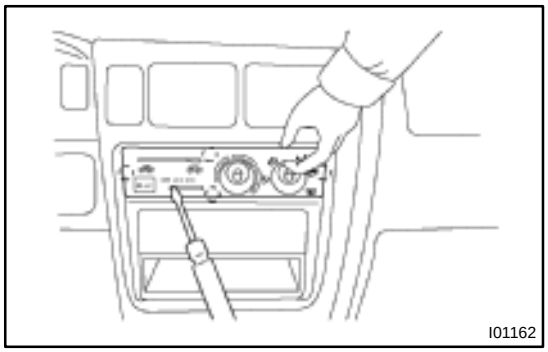
I01162

2. REMOVE CENTER CLUSTER FINISH PANEL

(a) Remove the A/C switch.
(See page AC–83)
(b) Pull out the hater control knobs.
(c) Remove heater control name plate.
(d) Remove the 2 screws.

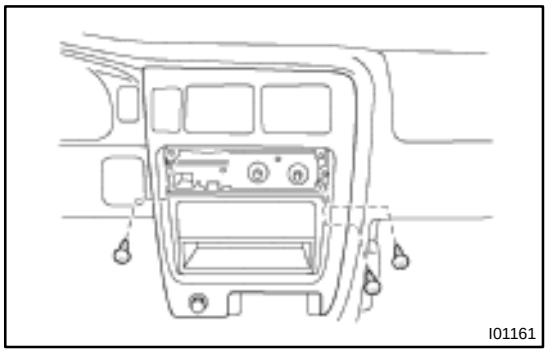
I01161

(e) Using a screwdriver, release the 4 fitting clips and pull out the panel, then disconnect the connector.

HINT:
Tape the screwdriver tip before use.

3. DISCONNECT HATER CONTROL CABLES

HINT:

After connection, adjust the control cables.

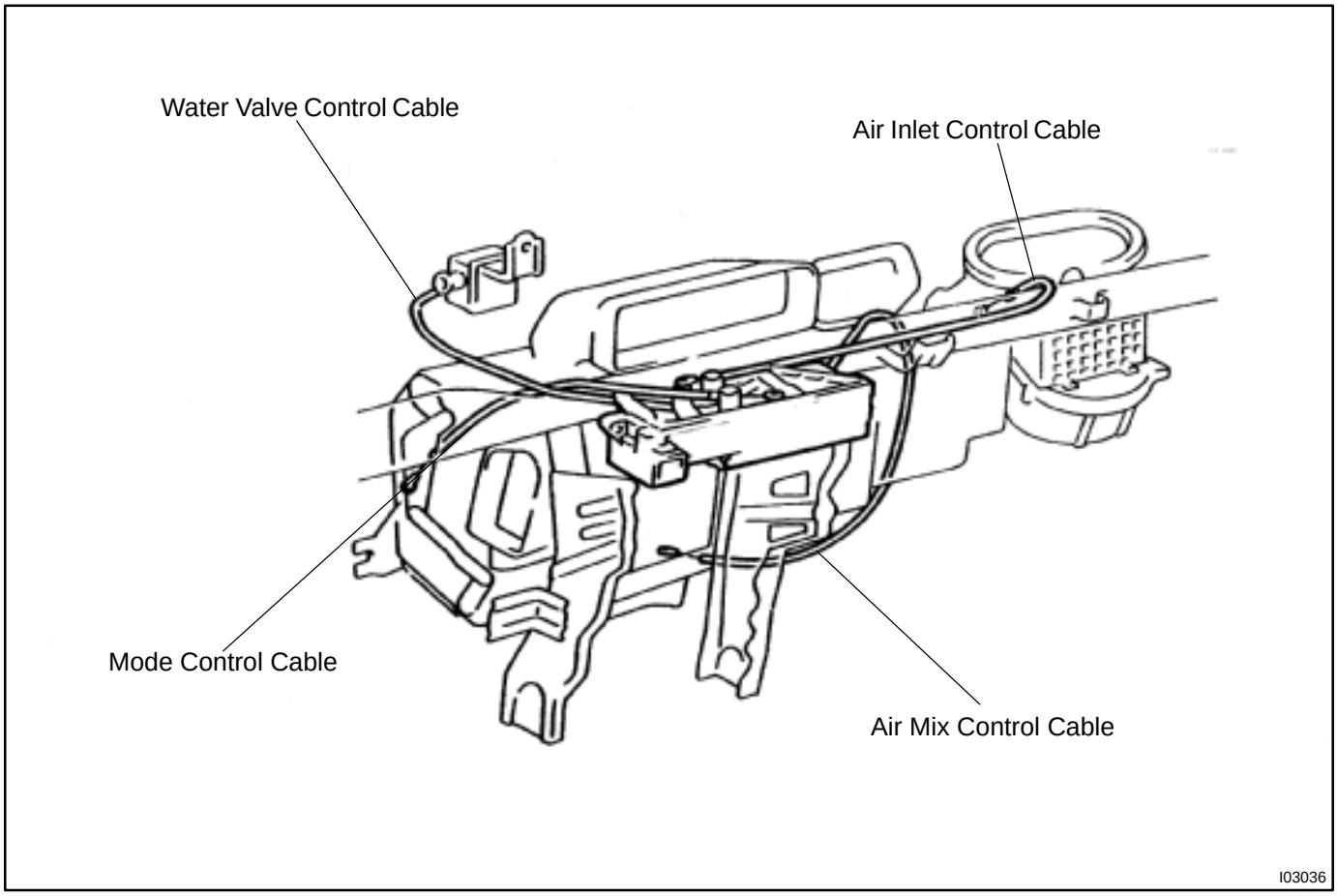

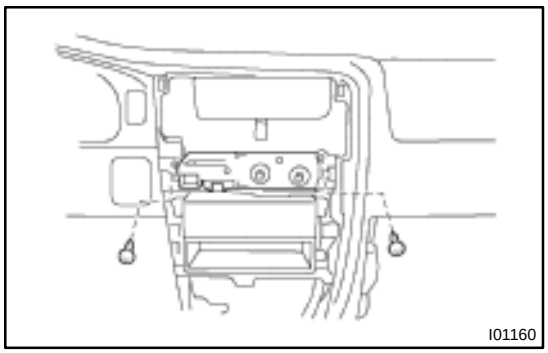

4. REMOVE HEATER CONTROL ASSEMBLY

Remove the 2 screws and pull out the heater control assembly, then disconnect the connector.

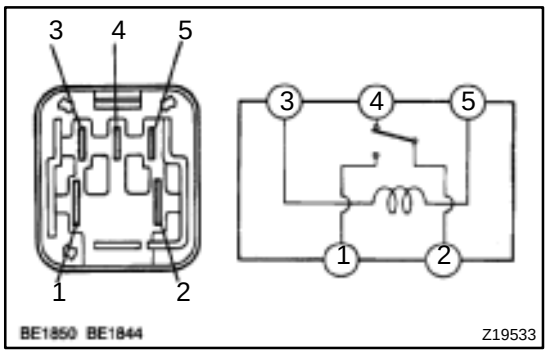

HEATER MAIN RELAY

AC08X–01

INSPECTION

INSPECT HEATER MAIN RELAY (Making: HTR) CONTINUITY

Condition	Tester connection	Specified condition
Constant	2 – 4 3 – 5	Continuity
Apply B+ between terminals 3 and 5	1 – 2	Continuity

If continuity is not as specified, replace the relay.

AC08C–01

INSPECTION

INSPECT FINS FOR BLOCKAGE

If the fins are clogged, clean them with compressed air.

AC08D–01

INSTALLATION

Installation is in the reverse order of removal (See page AC–57).

HEATER RADIATOR

AC08B–01

REMOVAL

1. REMOVE HEATER UNIT
(See page AC–30)

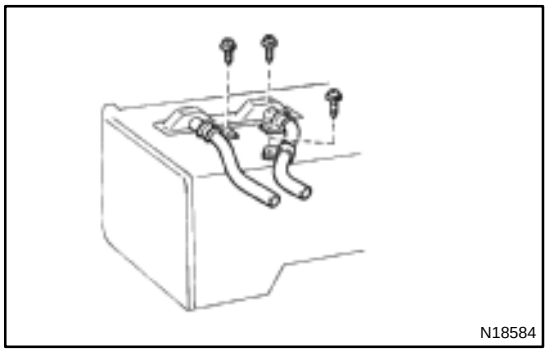

2. REMOVE HEATER RADIATOR

(a) Remove 3 screws and 3 plates and clamp.

(b) Pull the radiator upward.

HEATER UNIT

COMPONENTS

AC07M–01

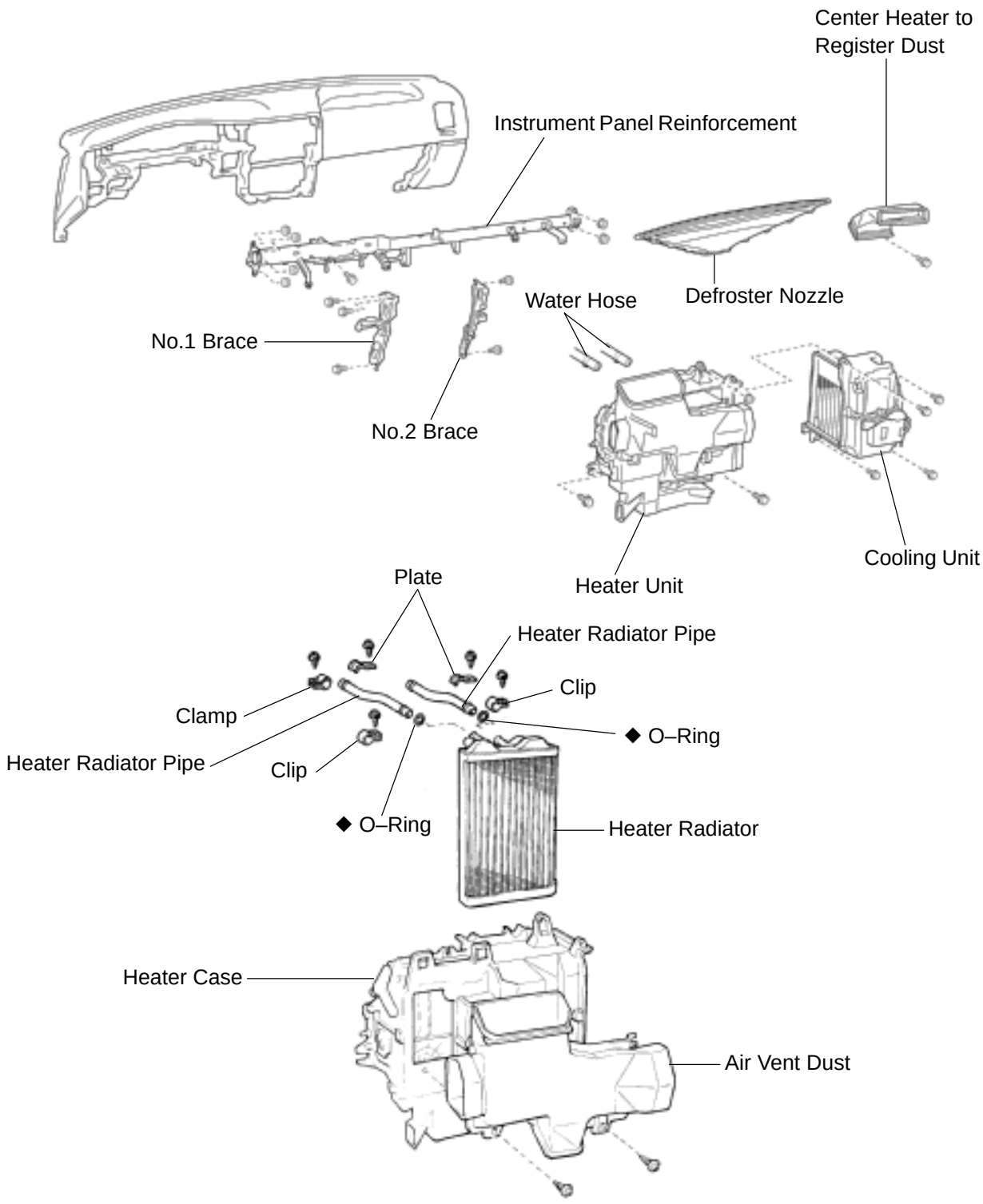

◆ Non–reusable part

I02739

AC07P–01

DISASSEMBLY

1. REMOVE HEATER RADIATOR

(a) Remove the 3 screws and 2 plates and clamp.

(b) Pull out the heater radiator.

(c) Remove the 2 screws and 2 clips, then disconnect the heater radiator pipes.

HINT:

At the time of reassembly, please refer to the following item.

Do not reuse 2 O–rings.

2. REMOVE AIR VENT DUCT

Remove the 2 screws and duct.

AC07Q–01

INSTALLATION

Installation is in the reverse order of removal (See page AC–30).

AC07O–01

REASSEMBLY

Reassembly is in the reverse order of disassembly (See page AC–31).

AC07N–01

REMOVAL

1. REMOVE COOLING UNIT (See page AC–25)

2. DRAIN ENGINE COOLANT FROM RADIATOR

HINT:

It is not necessary to drain out all the coolant.

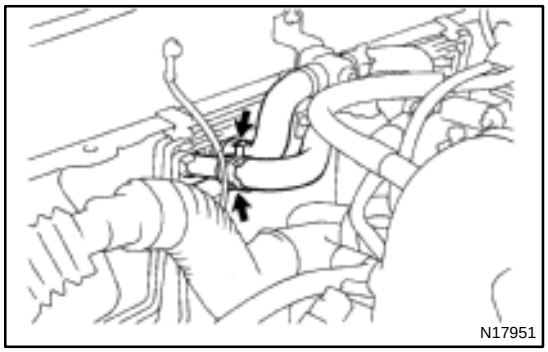

3. DISCONNECT WATER HOSES FROM HEATER RADIATOR PIPES

(a) Using pliers, grip the claw of the hose clip and slide the clip along the hose

(b) Disconnect the water hoses from the heater radiator pipes.

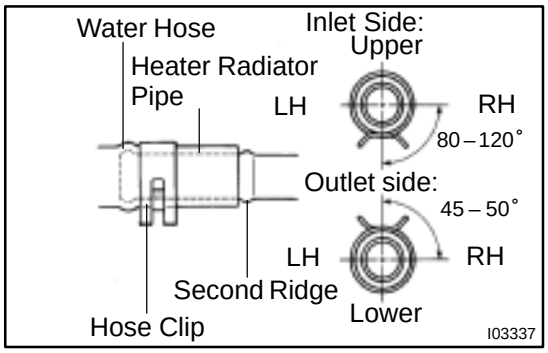

HINT:

At the time of installation, please refer to the following items.

- Push the water hose onto the heater radiator pipe as far as the second ridge on the pipe.
- Install the hose clip in the position, as shown in the illustration.

4. REMOVE INSTRUMENT PANEL AND REINFORCEMENT (See page BO–47)

5. REMOVE DEFROSTER NOZZLE AND HEATER TO REGISTER DUCT

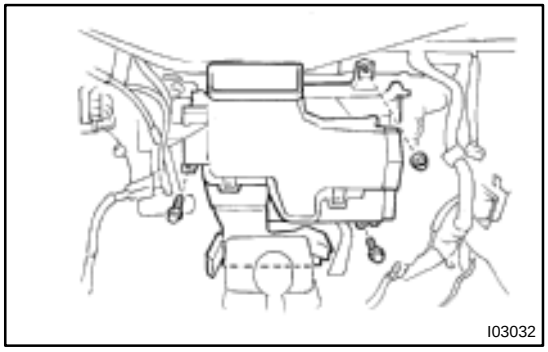

6. REMOVE HEATER UNIT

Remove the 2 bolts, nut and heater unit.

AC07D–01

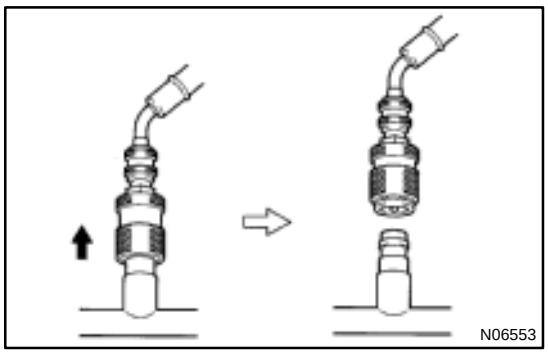

SET OFF

1. **CLOSE BOTH HAND VALVE OF MANIFOLD GAUGE SET**
2. **DISCONNECT QUICK DISCONNECT ADAPTERS FROM SERVICE VALVES ON REFRIGERANT LINE**

HINT:

Slide the sleeve of the quick disconnect adapter upward to unlock the adapter and remove it from the service valve.

3. **INSTALL CAPS TO SERVICE VALVES ON REFRIGERANT LINE**

AC08W–01

INSTALLATION

Installation is in the reverse order of removal (See page AC–77).

PRESSURE SWITCH

AC08U–01

ON–VEHICLE INSPECTION

1. **SET ON MANIFOLD GAUGE SET (See page AC–19)**
2. **REMOVE GLOVE COMPARTMENT DOOR (See page BO–47)**
3. **DISCONNECT CONNECTOR FROM COOLING UNIT**
4. **SET VEHICLE IN THESE CONDITIONS:**

(a) Running engine at 2,000 rpm
(b) Blower speed control switch at HI
(c) Temperature control lever MAX. COOL
(d) A/C switch ON

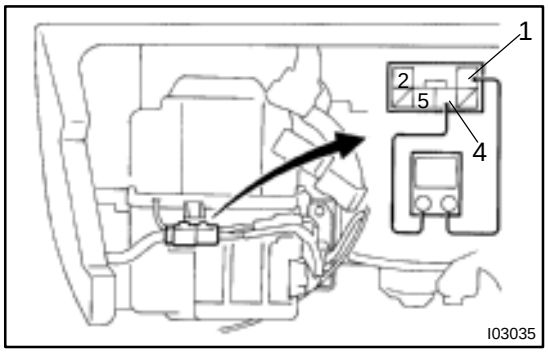

5. **INSPECT PRESSURE SWITCH OPERATION**

(a) Connect the positive (+) lead from the ohmmeter to terminal 1 and negative (–) lead to terminal 4.

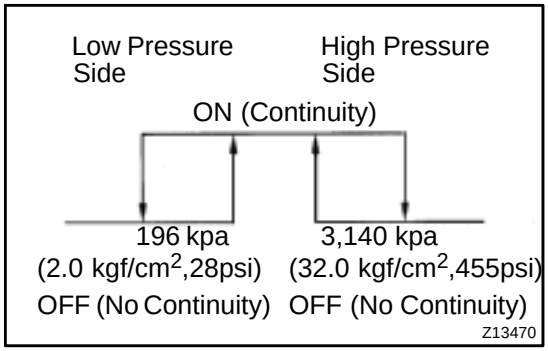

(b) Check continuity between terminals when refrigerant pressure is changed, as shown in the illustration.

If operation is not as specified, replace the pressure switch.

AC08V–01

REMOVAL

1. REMOVE EVAPORATOR
(See page AC–54)

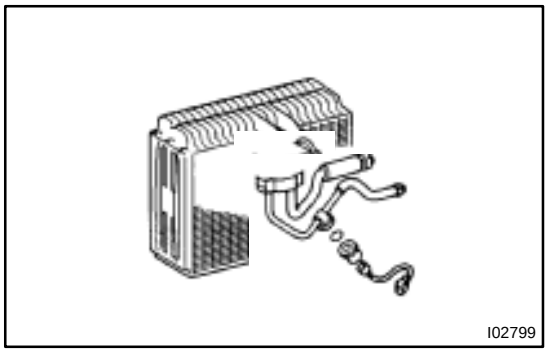

2. REMOVE PRESSURE SWITCH FROM LIQUID TUBE

Disconnect the connector and remove the pressure switch.

Torque: 10 N·m (100 kgf·cm, 7 ft·lbf)

HINT:

- Lock the switch mounted on the tube with an open end wrench, being careful not to deform the tube and remove the switch.
- At the time of installation, please refer to the following item.
  Lubricate a new O–ring with the compressor oil and install the switch.

AC084–01

INSTALLATION

Installation is in the reverse order of removal (See page AC–48).

RECEIVER

AC082–01

ON–VEHICLE INSPECTION

INSPECT FITTINGS FOR LEAKAGE

Using a gas leak detector, check for leakage.

If there is leakage, check the tightening toque at the joints.

AC083–01

REMOVAL

1. DISCHARGE REFRIGERANT FROM REFRIGERATION SYSTEM

HINT:

At the time of installation, please refer to the following item.

Evacuate air from refrigeration system.

Charge system with refrigerant and inspect for leakage of refrigerant.

Specified amount: 600 ± 50 g (21.16 ± 1.76 oz.)

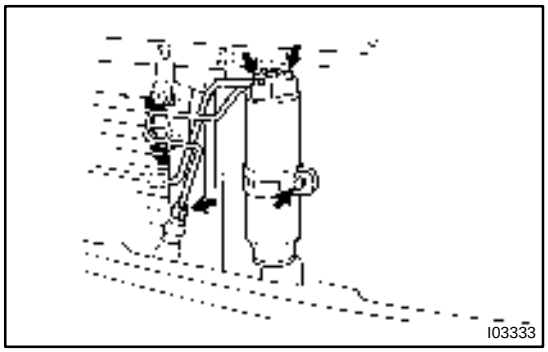

2. DISCONNECT LIQUID TUBE BETWEEN RECEIVER AND COOLING UNIT

Remove the bolt and disconnect the liquid tube.

Torque: 6.0 N·m (60 kgf·cm, 52 in.·lbf)

NOTICE:

Cap the open fittings immediately to keep moisture or dirt out of the system.

HINT:

At the time of installation, please refer to the following item.

Lubricate a new O–ring with compressor oil and install the tube.

3. REMOVE LIQUID TUBE BETWEEN RECEIVER AND CONDENSER

(a) Loosen the nut and disconnect the liquid tube from condenser.

Torque: 14 N·m (140 kgf·cm, 10 ft·lbf)

(b) Remove the 2 bolts and disconnect the both tubes.

Torque: 6.0 N·m (60 kgf·cm, 52 in.·lbf)

NOTICE:

Cap the open fittings immediately to keep moisture or dirt out of the system.

HINT:

At the time of installation, please refer to the following item.

Lubricate 3 new O–rings with compressor oil and install the tube.

4. REMOVE RECEIVER FROM RECEIVER HOLDER

Remove the holder bolt and pull the receiver upward from the holder

HINT:

At the time of installation, please refer to the following item.

If receiver is replaced, add compressor oil to receiver.

Add 20 cc (0.71 fl.oz.)

Compressor oil: ND–OIL 8 or equivalent

AC07F–01

LOCATION

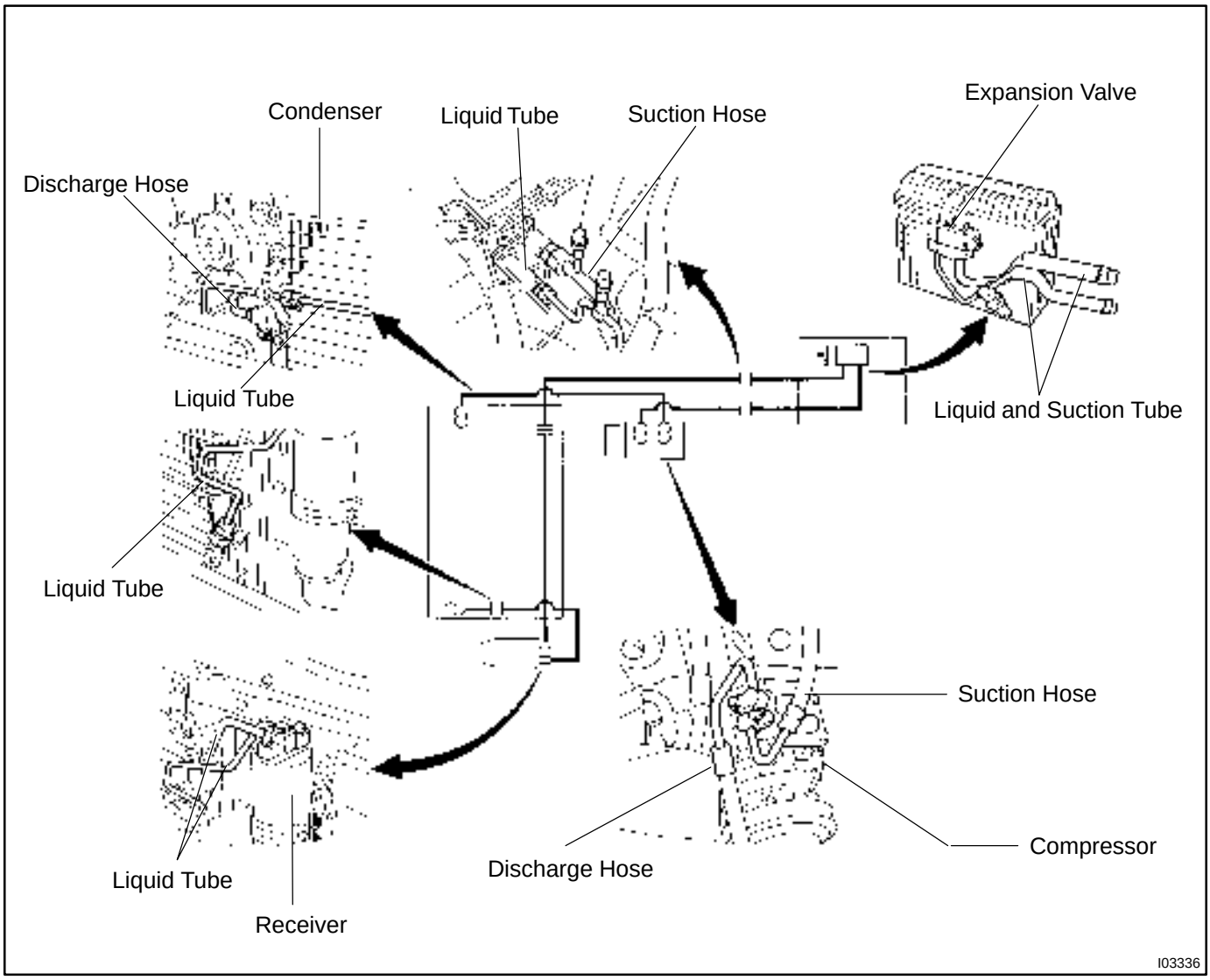

REFRIGERANT LINE

AC07G–01

ON–VEHICLE INSPECTION

1. INSPECTION HOSE AND TUBE CONNECTIONS FOR LOOSENESS

2. INSPECT HOSES AND TUBES FOR LEAKAGE

Using a gas leak detector, check for leakage of refrigerant.

AC07E–01

REPLACEMENT

1. DISCHARGE REFRIGERANT FROM REFRIGERATION SYSTEM

2. REPLACE FAULTY TUBE OR HOSE

NOTICE:

Cap the open fittings immediately to keep moisture or dirt out of the system.

3. TIGHTEN JOINT OF BOLT OR NUT AT SPECIFIED TOQUE

NOTICE:

Connections should not be torqued tighter than the specified torque.

Part tightened	N·m	kgf·cm	ft·lbf
Receiver x Liquid tube	6.0	60	52 in.·lbf
Condenser x Discharge hose	10	100	7
Condenser x Liquid tube	14	140	10
Compressor x Discharge hose	10	100	7
Compressor x Suction hose	10	100	7
Cooling unit x Liquid tube	14	140	10
Cooling unit x Suction tube	32	330	24
Expansion valve x Evaporator	5.4	55	48 in.·lbf
Suction line (Piping joint)	32	330	24
Liquid line (Piping joint)	14	140	10

4. EVACUATE AIR IN REFRIGERATION SYSTEM AND CHARGE SYSTEM WITH REFRIGERANT

Specified amount: 600 ± 50g (21.16 ± 1.76 oz.)

5. INSPECT FOR LEAKAGE OF REFRIGERANT

Using a gas leak detector, check for leakage of refrigerant.

6. INSPECT AIR CONDITIONING OPERATION

AC077–01

CHARGING

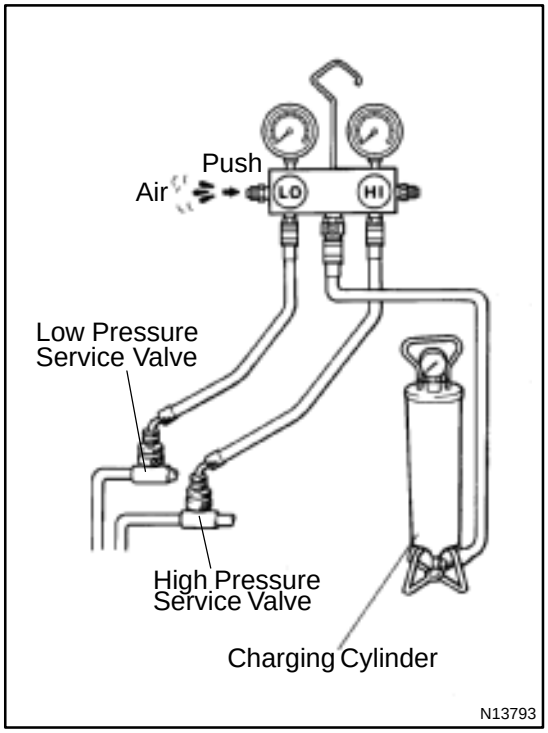

1. INSTALL CHARGING CYLINDER

HINT:

When handling the charging cylinder, always follow the directions given in the instruction manual.

(a) Charge the proper amount of refrigerant into the charging cylinder.

(b) Connect the center hose to the charging cylinder.

CAUTION:

Do not open both high and low hand valves of manifold gauge set.

(c) Open the valve of charging cylinder.

(d) Press the valve core on the side of manifold gauge and expel the air inside of the center hose.

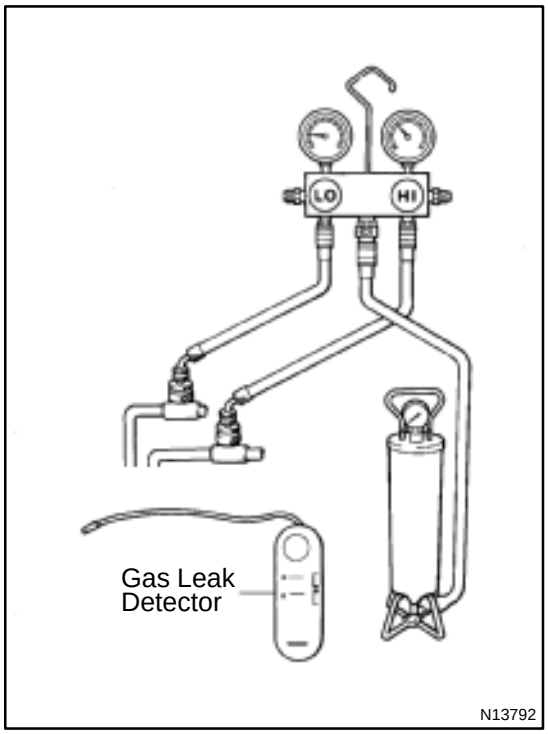

2. INSPECT REFRIGERATION SYSTEM FOR LEAKS

(a) Open the high pressure hand valve and charge refrigerant.

(b) When the low pressure gauge indicates 98 kPa (1 kgf/cm^2, 14 psi) close the high pressure hand valve.

(c) Using a gas leak detector, check the system for leakage.

If leak is found, repair the faulty component or connection.

CAUTION:

Use the refrigerant recovery/ recycling machine to recover the refrigerant whenever replacing parts.

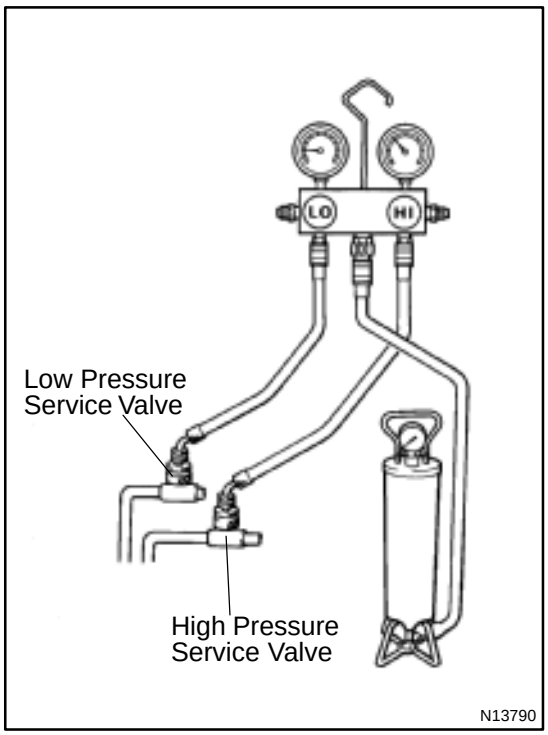

3. CHARGE REFRIGERANT INTO REFRIGERANT SYSTEM

If there is no leakafter refrigerant leak check, charge the proper amount of refrigerant intor refrigeration system.

CAUTION:

- **Never run the engine when charging the system throughthe high pressure side.**
- **Do not open the low pressure hand avalve when the system is being charged with liquid refrigerant.**

(a) Open the high pressure hand valve fully.

(b) Charge specified amopunt of refrigerant, then close the high pressure hand valve.

HINT:

A fully charged system is indicated by the sight flass veing free of any bubbles.

4. SET OFF MANIFOLD GAUGE SET

(a) Close both hand valves of manifold gauge set.

(b) Disconnect the quick disconnect adapters from the service valves.

5. INSTALL CAPS TO SERVICE VALVES ON REFRIGERANT LINES

AC076–01

EVACUATING

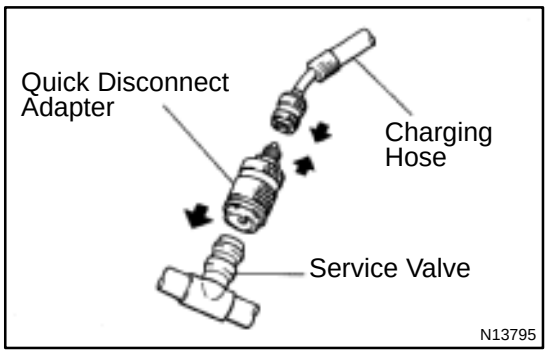

1. CONNECT QUICK DISCONNECT ADAPTER TO CHARGING HOSES

2. REMOVE CAPS FROM SERVICE VALVES ON REFRIGERANT LINES

3. SET ON MANIFOLD GAUGE SET

(a) Close both hand valves of manifold gauge set.

(b) Connect the quick disconnect adapters to the service valves.

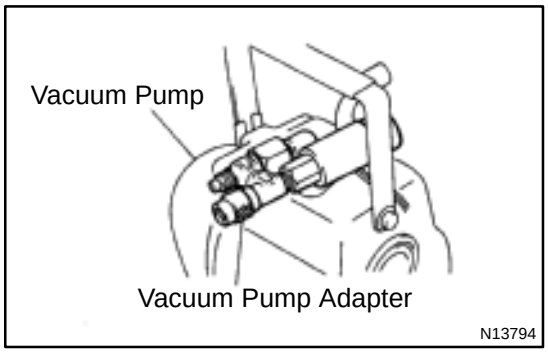

4. EVACUATE AIR FROM REFRIGERATION SYSTEM

(a) Connect the vacuum pump adapter to the vacuum pump.

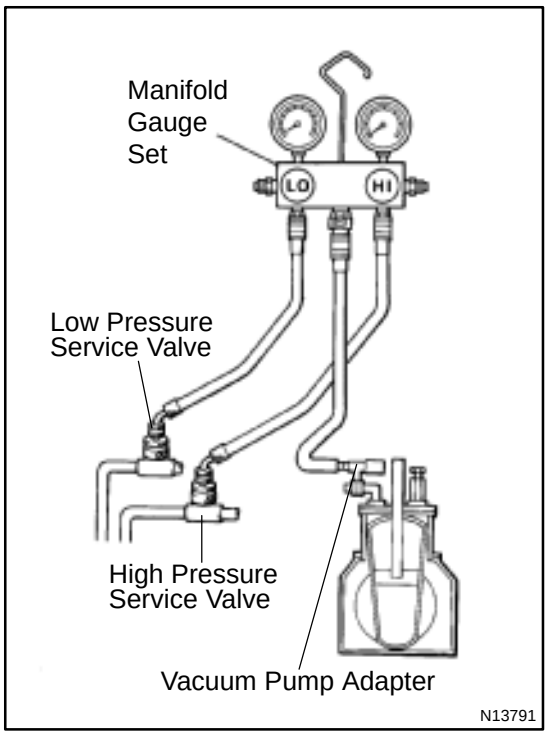

(b) Connect the center hose of the manifold gauge set to the vacuum pump adapter.

(c) Open both the high and low hand valves and run the vacuum pump.

(d) After 10 minutes or more, check that the low pressure gauge indicates 750 mmHg (30 in. Hg) or more.

HINT:

If the reading is 750 mmHg (30 in. Hg) or more, close both hand valves of manifold gauge set and stop the vacuum pump.

Check the system for leaks and repair if necessary.

(e) Close both the high and low hand valves and stop the vacuum pump.

(f) Leave the system in this condition for 5 minutes or more and check that there is no gauge indicator.

AC078–01

LOCATION

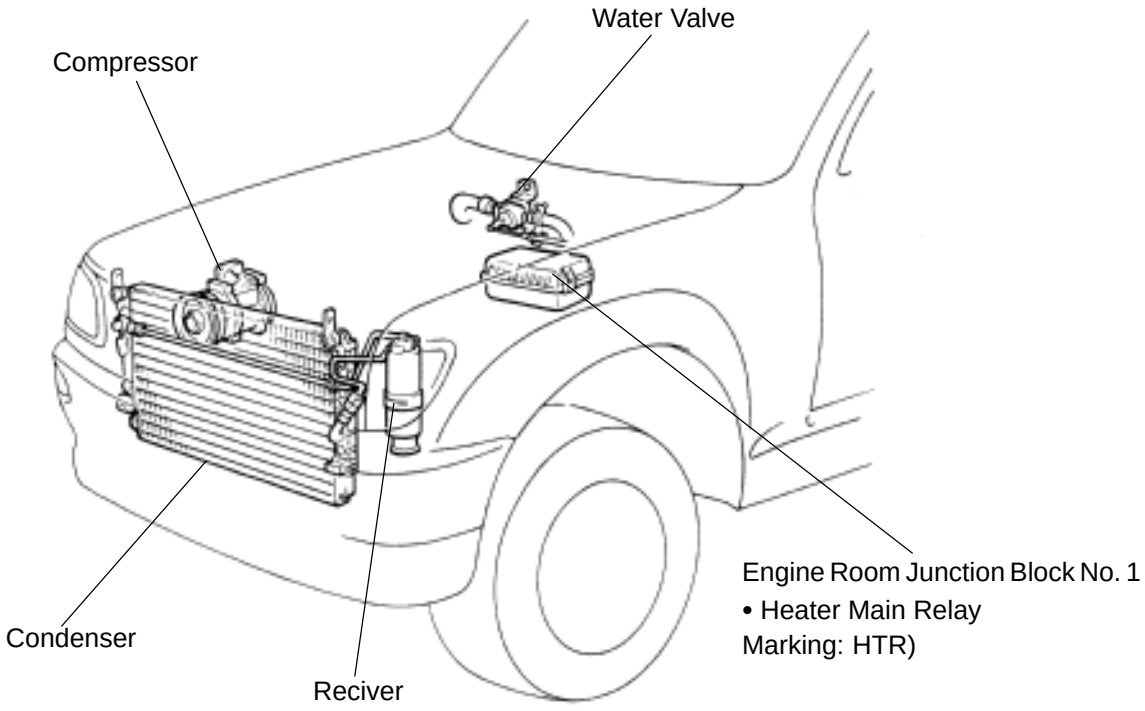

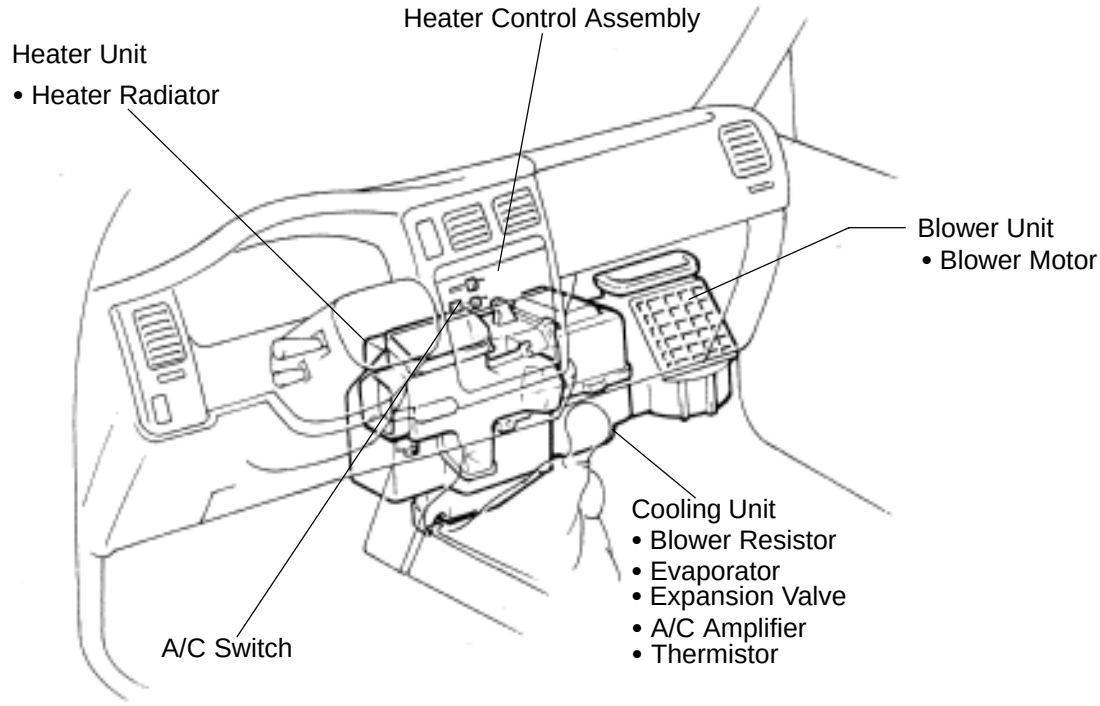

I03335

AC075–01

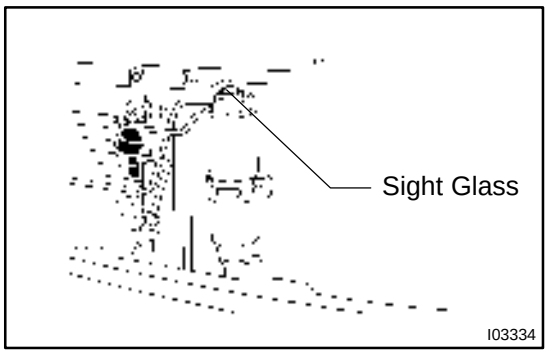

ON–VEHICLE INSPECTION

1. INSPECT REFRIGERANT VOLUME

Observe the sight glass on the liquid tube.

Test conditions:

- Running engine at 1,500 rpm
- Blower speed control switch at ”HI” position
- A/C switch ON
- Temperature control dial at ”COOL” position
- Fully open the doors

Item	Symptom	Amount of refrigerant	Remedy
1	Bubbles present in sight glass	Insufficient*	(1) Check for gas leakage with gas leak detector and repair if necessary (2) Add refrigerant until bubbles disappear
2	No bubbles present in sight glass	None, sufficient or too much	Refer item 3 and 4
3	No temperature difference between compressor inlet and outlet	Empty or nearly empty	(1) Check for gas leakage with gas leak detector and repair if necessary (2) Add refrigerant until bubbles disappear
4	Temperature between compressor inlet and outlet is noticeably different	Correct or too much	Refer to item 5 and 6
5	Immediately after air conditioning is turned off, refrigerant in sigh glass stays clear	Too much	(1) Discharge refrigerant (2) Evacuate air and charge proper amount of purified refrigerant
6	When air conditioning is turned off, refrigerant foams and then stays clear	Correct	–

*: Bubbles in the sight glass with ambient temperatures higher than usual can be considered normal if cooling is sufficient.

2. INSPECT REFRIGERANT PRESSURE WITH MANIFOLD GAUGE SET

This is a method in which the trouble is located by using a manifold gauge set. Read the manifold gauge pressure when these conditions are established.

Test conditions:

- Temperature at the air inlet with the switch set at RECURC is 30 – 35 ˚C (86 – 95 ˚F)
- Engine running at 1500 rpm
- Blower speed control switch at ”HI” position
- Temperature control dial on ”COOL” position

HINT:

It should be noted that the gauge indications may vary slightly due to ambient temperature conditions.

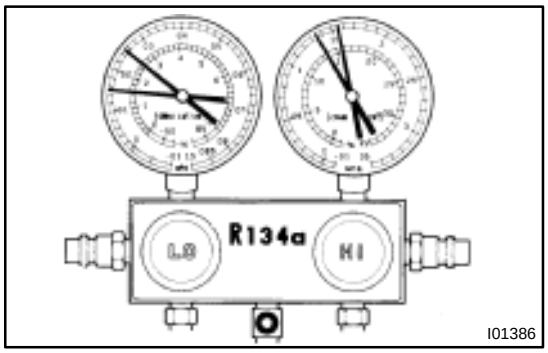

I01386

(1) Normally functioning refrigeration system.

Gauge reading:

Low pressure side:

0.15 – 0.25 MPa (1.5 – 2.5 kgf/cm^2)

High pressure side:

1.37 – 1.57 MPa (14 – 16 kgf/cm$^{2)}$

(2) Moisture present in refrigeration system.

Condition : Periodically cools and then fails to cool

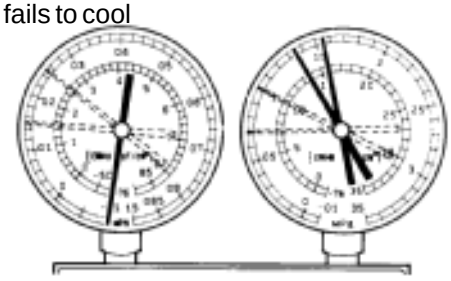
I01387

Symptom seen in refrigeration system	Probable cause	Diagnosis	Remedy
During operation, pressure on low pressure side sometimes become a vacuum and sometime normal	Moisture entered in refrigeration system freezes at expansion valve orifice and temporarily stops cycle, but normal state is restored after a time when the ice melts	• Drier in oversaturated state • Moisture in refrigeration system freezes at expansion valve orifice and blocks circulation of refrigerant	(1) Replace receiver (2) Remove moisture in cycle through repeatedly evacuating air (3) Charge proper amount of new refrigerant

(3) Insufficient cooling

Condition: Insufficient cooling

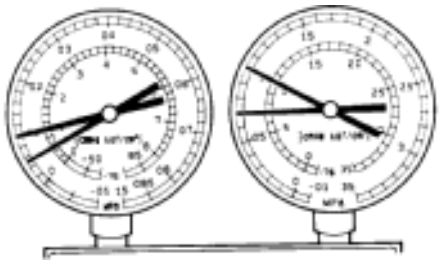

I01388

Symptom seen in refrigeration system	Probable cause	Diagnosis	Remedy
• Pressure low on both low and high pressure sides • Bubbles seen in sight glass continuously • Insufficient cooling performance	Gas leakage at some place in refrigeration system	• Insufficient refrigerant in system • Refrigerant leaking	(1) Check for gas leakage with gas leak detector and repair if necessary (2) Charge Proper amount of refrigerant (3) If indicated pressure value is near 0 when connected to gauge, create the vacuum after inspecting and repairing the location of the leak

(4) Poor circulation of refrigerant

Condition: Insufficient cooling

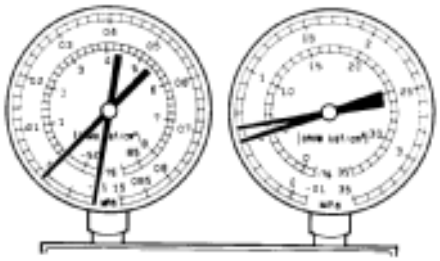

I01389

Symptom seen in refrigeration system	Probable cause	Diagnosis	Remedy
• Pressure low in both low and high pressure sides • Frost on tube from receiver to unit	Refrigerant flow obstructed by dirt in receiver	Receiver clogged	Replace receiver

(5) Refrigerant does not circulate

Condition: Does not cool (Cools from time to time in some cases)

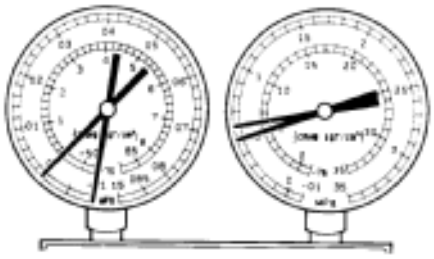

I01449

Symptom seen in refrigeration system	Probable cause	Diagnosis	Remedy
• Vacuum indicated on low pressure side, very low pressure indicated on high pressure side • Frost or dew seen on piping before and after receiver/ drier or expansion valve	• Refrigerant flow obstructed by moisture or dirt in refrigeration system • Refrigerant flow obstructed by gas leakage from expansion valve	Refrigerant does not circulate	(1) Check expansion valve (2) Clean out dirt in expansion valve by blowing with air (3) Replace receiver (4) Evacuate air and charge new refrigerant to proper amount (5) For gas leakage from expansion valve, replace expansion valve

(6) Refrigerant overcharged or insufficient cooling of condenser

Condition: Insufficient cooling

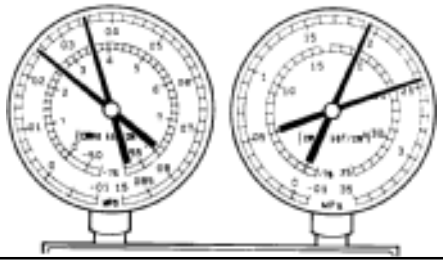

I01390

Symptom seen in refrigeration system	Probable cause	Diagnosis	Remedy
• Pressure too high on both low and high pressure sides • No air bubbles seen through the sight glass even when the engine rpm is lowered	• Unable to develop sufficient performance due to excessive refrigerant in system • Insufficient cooling of condenser	•Excessive refrigerant in cycle → refrigerant overcharged • Condenser cooling insufficient → condenser fins clogged of cooling fan faulty	(1) Clean condenser (2) Check cooling fan with fluid coupling operation (3) If (1) and (2) are in normal state, check amount of refrigerant Charge proper amount of refrigerant

(7) Air present in refrigeration system

Condition: Insufficient cooling

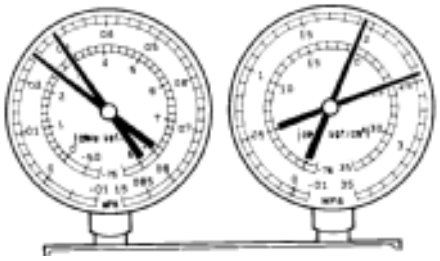

NOTE : These gauge indications are shown when the refrigeration system has been opened and the refrigerant charged without vacuum purging.

I01392

Symptom seen in refrigeration system	Probable cause	Diagnosis	Remedy
• Pressure too high on both low and high pressure sides • The low pressure piping hot to the touch • Bubbles seen in sight glass	Air entered in refrigeration system	• AIr present in refrigeration system • Insufficient vacuum purging	(1) Check compressor oil to see if it is dirty or insufficient (2) Evacuate air and charge new refrigerant

(8) Expansion valve improperly

Condition: Insufficient cooling

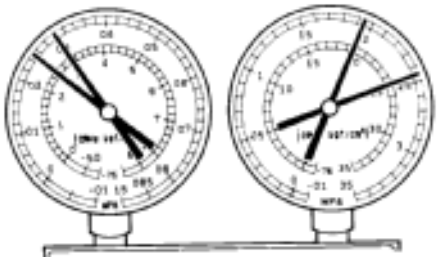

I01450

Symptom seen in refrigeration system	Probable cause	Diagnosis	Remedy
• Pressure too high on both low and high pressure sides • Frost or large amount of dew on piping on low pressure side	Trouble in expansion valve	• Excessive refrigerant in low pressure piping • Expansion valve opened too wide	Check expansion valve Replace if defective

(9) Defective compression compressor

Condition : Does not cool

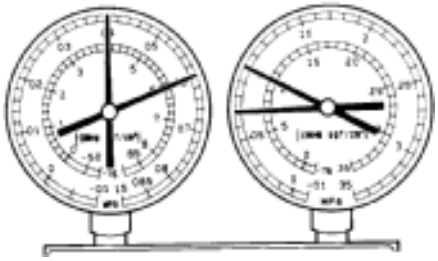

I01393

Symptom seen in refrigeration system	Probable cause	Diagnosis	Remedy
• Pressure too high on low and high pressure sides • Pressure too low on high pressure side	Internal leak in compressor	• Compression defective • Valve leaking or broken sliding parts	Repair or replace compressor

3. INSPECT IDLE–UP SPEED

(a) Warm up engine.

(b) Inspect idle–up speed when the these conditions are established.

- Warm up engine
- Blower speed control switch at ”HI” position
- A/C switch ON
- Temperature control dial at ”COOL” position

Magnetic clutch condition	Idle–up speed
2RZ–FE and 3RZ–FE Engine	–
Magnetic clutch not engaged	700 ± 50 rpm
Magnetic clutch engaged	900 ± 50 rpm
5VZ–FE Engine	–
Magnetic clutch not engaged	700 ± 50 rpm
Magnetic clutch engaged	850 ± 50 rpm

If idle speed is not as specified, check IAC valve and air intake system.

4. INSPECT FOR LEAKAGE OF REFRIGERANT

(a) Perform in these conditions:

- Stop engine.
- Secure good ventilation (If the gas leak detector may not react to volatile gases which are not refrigerant, such as evaporated gasoline and exhaust gas.)
- Repeat the test 2 or 3 times.
- Make sure that there is some refrigerant remaining in the refrigeration system.
  When compressor is OFF: approx. 392 – 588 kPa (4 – 6 kgf/ cm^2, 57 – 85 psi)

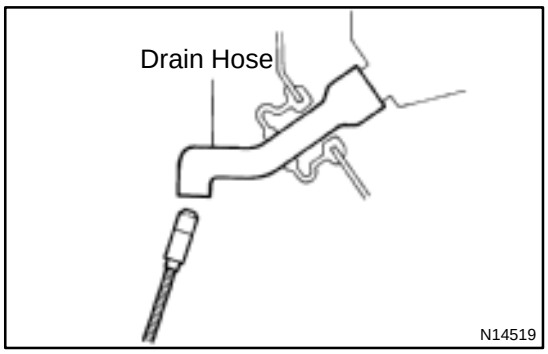

(b) Bring the gas leak detector close to the drain hose before performing the test.

HINT:

- After the blower motor has stopped, leave the cooling unit for more than 15 minutes.
- Expose the gas leak detector sensor under the drain hose.
- When bring the gas leak detector close to the drain hose, make sure that the gas leak detector does not react to the volatile gases.

If such reaction is unavoidable, the vehicle must be lifted up.

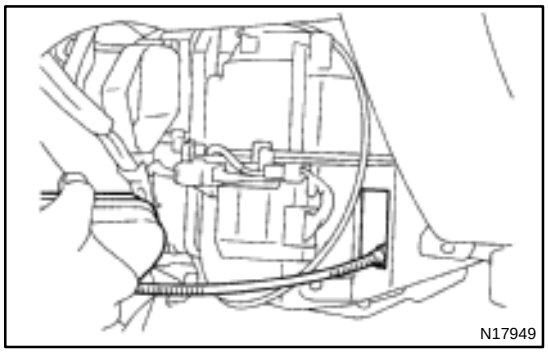

(c) If gas leak is not detected on the drain hose, remove the blower resistor from the cooling unit. Then insert the gas leak detector sensor into the unit and perform the test.

(d) Disconnect the connector and leave the pressure switch for approx. 20 minutes. Then bring the gas leak detector close to the pressure switch and perform the test.

(e) Bring the gas leak detector close to the refrigerant lines and perform the test.

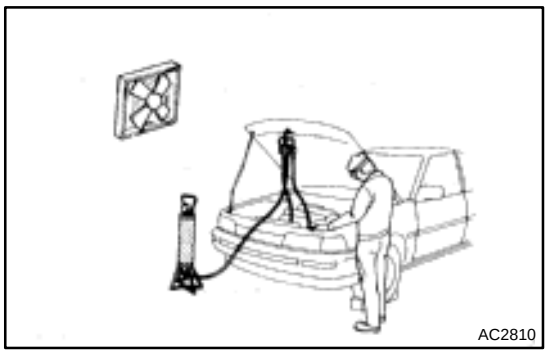
AC2810

AIR CONDITIONING SYSTEM

AC073–01

PRECAUTION

1. DO NOT HANDLE REFRIGERANT IN AN ENCLOSED AREA OR WEAR EYE PROTECTION

2. ALWAYS WEAR EYE PROTECTION

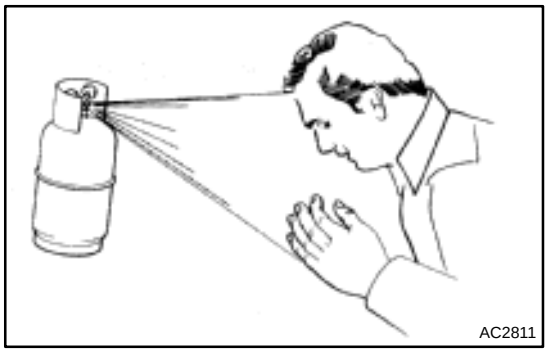
AC2811

3. BE CAREFUL NOT TO GET LIQUID REFRIGERANT IN YOUR EYES OR ON YOUR SKIN

If liquid refrigerant gets in your eyes or on your skin.

(a) Wash the area with lots of cool water.

CAUTION:

Do not rub your eyes or skin.

(b) Apply clean petroleum jelly to the skin.

(c) Go immediately to a physician or hospital for professional treatment.

4. NEVER HEAT CONTAINER OR EXPOSE IT TO NAKED FLAME

5. BE CAREFUL NOT TO DROP CONTAINER AND NOT TO APPLY PHYSICAL SHOCKS TO IT

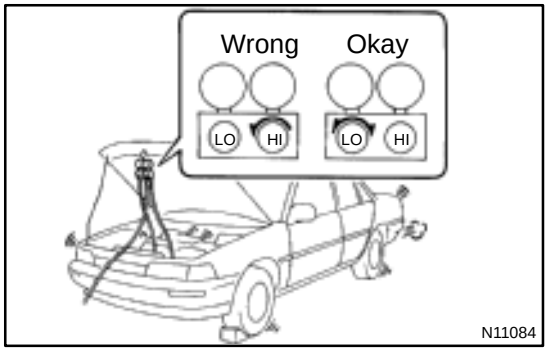

N11084

6. DO NOT OPERATE COMPRESSOR WITHOUT ENOUGH REFRIGERANT IN REFRIGERATION SYSTEM

If there is not enough refrigerant in the refrigerant system oil lubrication will be insufficient and compressor burnout may occur, so that care to avoid this, necessary care should be taken.

7. DO NOT OPEN PRESSURE MANIFOLD VALVE WHILE COMPRESSOR IS OPERATE

If the high pressure valve is opened, refrigerant flows in the reverse direction and could cause the charging cylinder to rupture, so open and close the only low pressure valve.

8. BE CAREFUL NOT TO OVERCHARGE SYSTEM WITH REFRIGERANT

If refrigerant is overcharged, it causes problems such as insufficient cooling, poor fuel economy, engine overheating etc.

9. SUPPLEMENTAL RESTRAINT SYSTEM (SRS)

The TOYOTA TACOMA is equipped with an SRS (Supplemental Restraint System) such as the driver airbag and passenger airbag. Failure to carry out service operations the correct sequence could cause the SRS to unexpectedly deployed during servicing, possible the SRS may fail to operate when required. Before servicing (including removal or installation of parts, inspection or replacement), be sure to read the following item carefully, then follow the correct procedure described in the repair manual.

AC08S–01

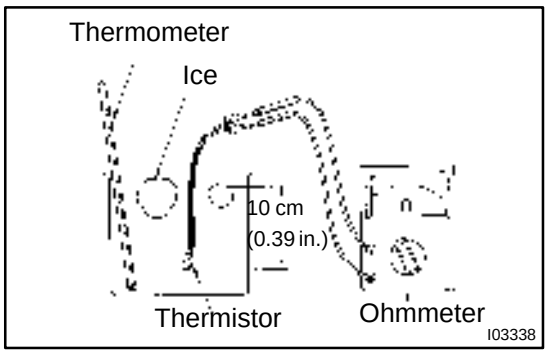

INSPECTION

INSPECT THERMISTOR RESISTANCE

(a) Place the thermistor in cold water, and while changing the temperature of the water, measure resistance at the connector and at the same time, measure temperature of the water with a thermometer.

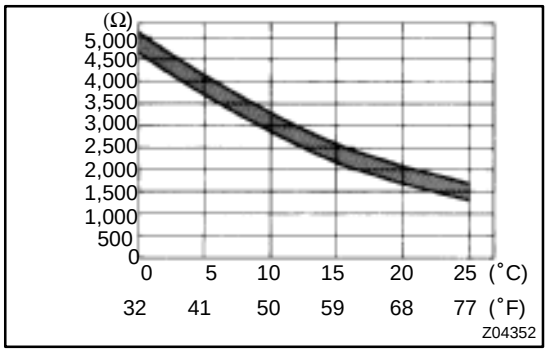

(b) Compare the 2 readings on the chart.

If resistance value is not as specified, replace the thermistor.

AC08T–01

INSTALLATION

Installation is in the reverse order of removal (See page AC–73).

THERMISTOR

AC08Q–01

ON–VEHICLE INSPECTION

1. REMOVE GLOVE COMPARTMENT DOOR
(See page BO–47)

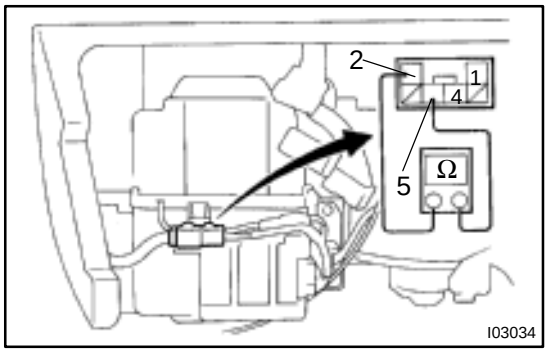

2. INSPECT THERMISTOR RESISTANCE

(a) Disconnect the connector

(b) Measure resistance between terminals 2 and 5.
Standard resistance: 1,500 Ω at 25 °C (77°F)

If resistance is not as specified, proceed next inspection.

AC08R–01

REMOVAL

1. REMOVE EVAPORATOR
(See page AC–54)

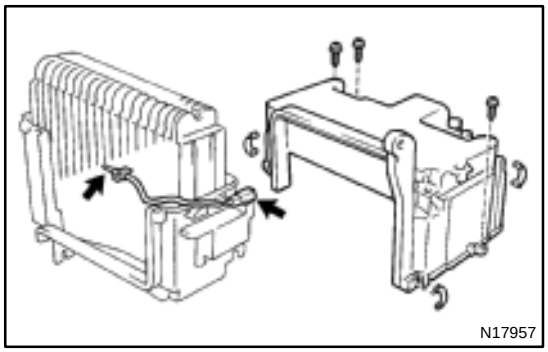

2. REMOVE THERMISTOR

(a) Disconnect the connector clamp.

(b) Pull out the thermistor from evaporator.

AC08J–01

INSTALLATION

Installation is in the reverse order of removal (See page AC–64).

WATER VALVE

AC08H–01

ON–VEHICLE INSPECTION

1. WARM UP ENGINE

2. DISCONNECT WATER VALVE CONTROL CABLE

3. INSPECT WATER VALVE OPERATION

(a) Check that warm air blown out the vent when the water valve lever is moved to ”WARM” position.

(b) Check that cool air blown out when the water valve is moved to the ”COOL” position.

If operation is not as specified, replace the water valve.

4. CONNECT WATER VALVE CONTROL CABLE

After connection, adjust the control cable.

AC08I–01

REMOVAL

1. DRAIN ENGINE COOLANT FROM RADIATOR

HINT:

It is not necessary to drain out all the coolant.

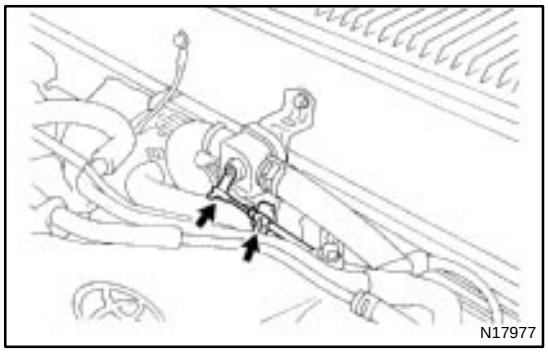

2. DISCONNECT WATER VALVE CONTROL CABLE FROM WATER VALVE

HINT:

At the time of installation, please refer to the following item

For installing the control cable, refer to ”INSTALLATION” of HEATER CONTROL ASSEMBLY on page AC–93.

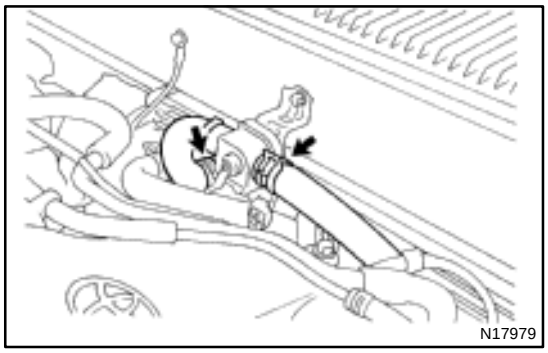

3. DISCONNECT WATER HOSES

(a) Using pliers, grip the claws of the clip and slide the clip along the hose.

(b) Disconnect the water hose.

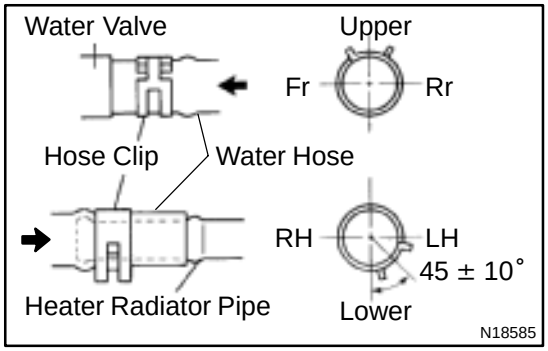

HINT:

At the time of installation, please refer to the following item.

Install the hose clip in the position, as shown in the illustration.

4. REMOVE WATER VALVE

Remove the bolt and water valve.

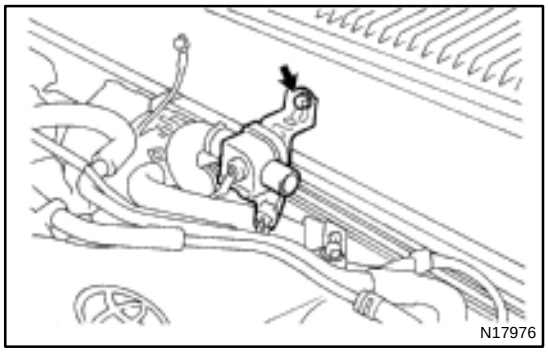

AUTOMATIC TRANSMISSION UNIT

AT01K–01

COMPONENTS

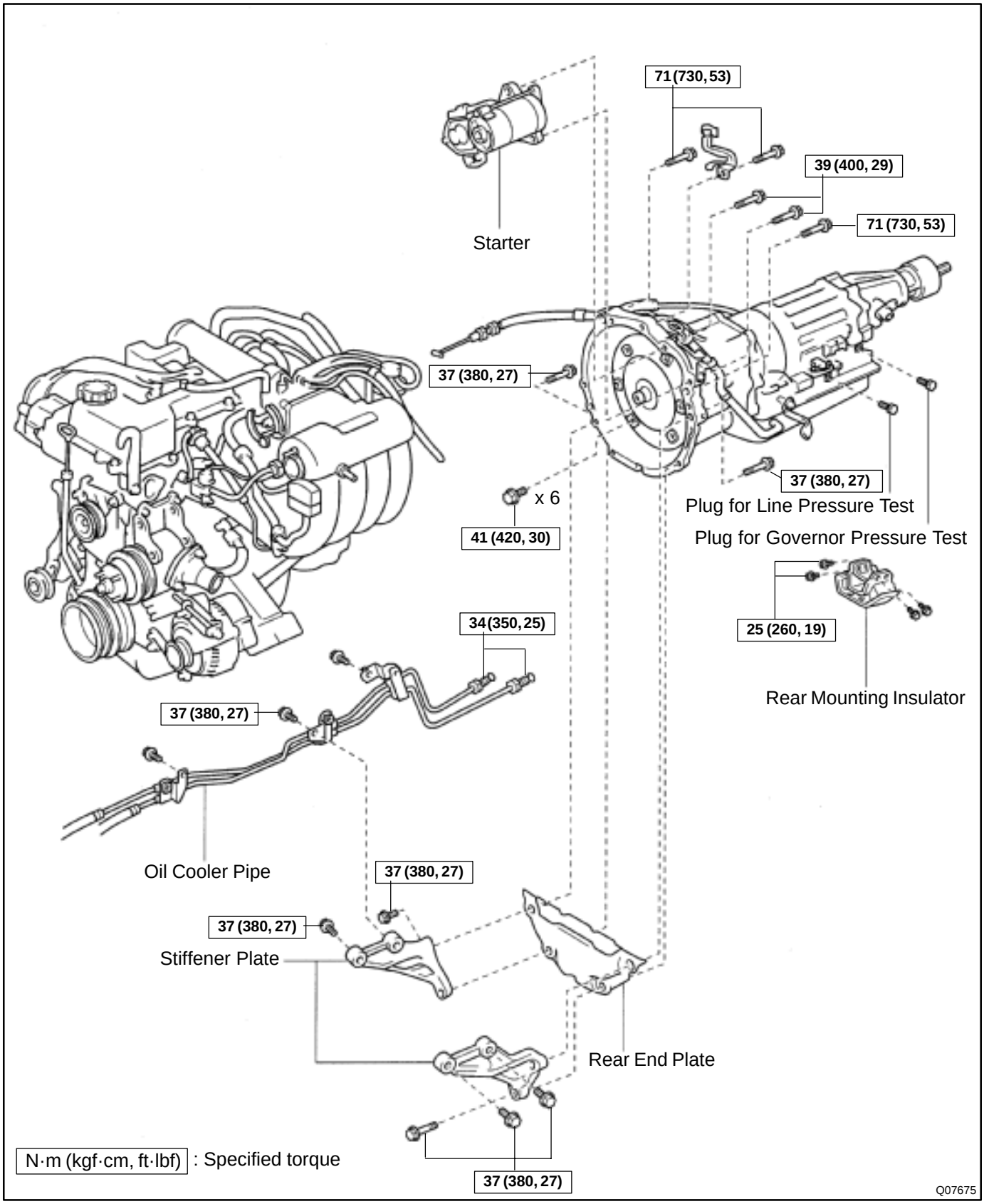

AT01J–01

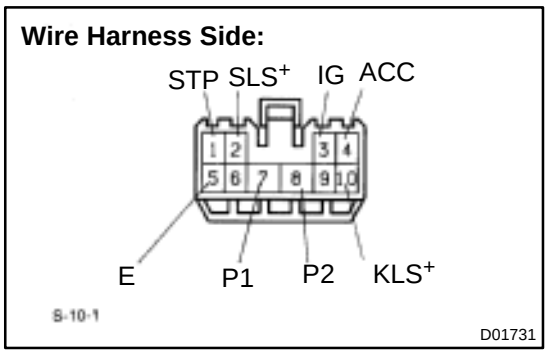

INSPECTION

1. INSPECT SHIFT LOCK CONTROL ECU

Using a voltmeter, measure the voltage at each terminal.

HINT:

Do not disconnect the ECU connector.

Terminal	Measuring Condition	Voltage (V)
4 – 5 (ACC – E)	Ignition switch ACC	10 – 14
3 – 5 (IG – E)	Ignition switch ON	10 – 14
1 – 5 (STP – E)	Depressing brake pedal	10 – 14
10 – 5 (KLS+ – E)	1. Ignition switch ACC and P position 2. Ignition switch ACC and except P position 3. Ignition switch ACC and except P position (After approx. 1 second)	0 10 – 14 6 – 9
2 – 5 (SLS+ – E)	1. Ignition switch ON and P position 2. Depress brake pedal 3. Except P position	0 8.5 – 13.5 0
7 – 5 (P1 – E)	1. Ignition switch ON, P position and depress brake pedal 2. Shift except P position under conditions above	0 9 – 13.5
8 – 5 (P2 – E)	1. Ignition switch ACC and P position 2. Shift except P position under conditions above	9 – 13.5 0

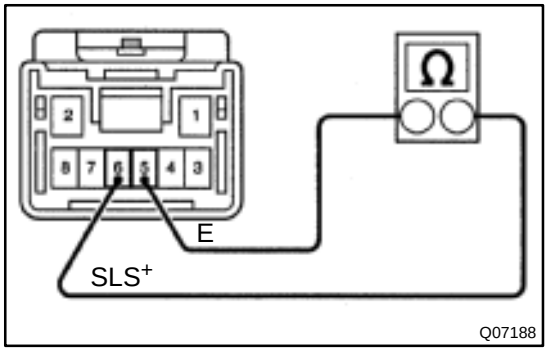

2. INSPECT SHIFT LOCK SOLENOID

(a) Disconnect the solenoid connector.

(b) Using an ohmmeter, measure the resistance between terminals.

Standard resistance: 29 – 35 Ω

If resistance value is not specified, replace the solenoid.

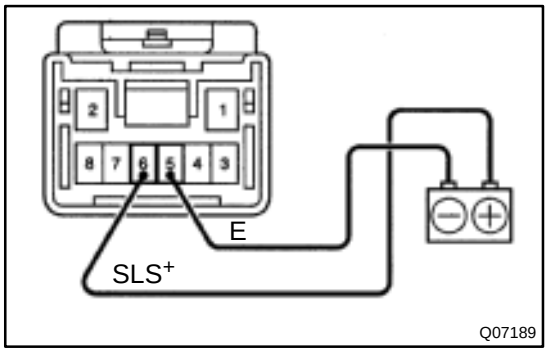

(c) Apply the battery positive voltage between terminals. Check that an operation noise can be heard from the solenoid.

If the solenoid does not operate, replace the solenoid.

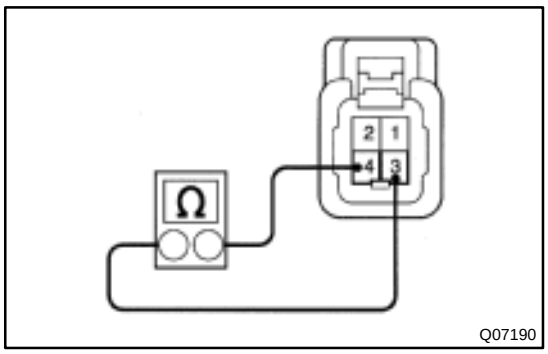

3. INSPECT KEY INTERLOCK SOLENOID

(a) Disconnect the solenoid connector.

(b) Using an ohmmeter, measure the resistance between terminals 3 and 4.

Standard resistance: 12.5 – 16.5 Ω

If resistance value is not as specified, replace the solenoid.

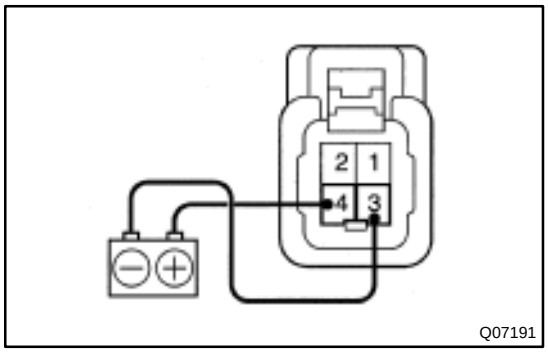

(c) Apply battery positive voltage between the terminals 3 and 4. Check that an operation noise can be heard from the solenoid.

If the solenoid does not operate, replace the solenoid.

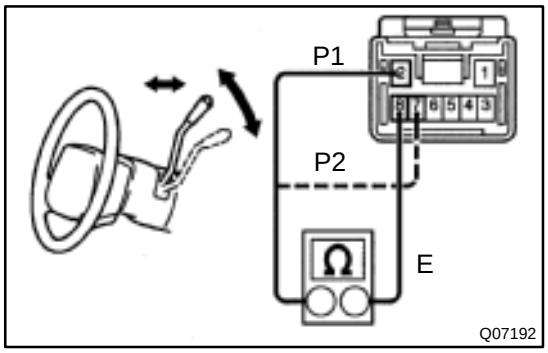

4. INSPECT SHIFT LOCK CONTROL SWITCH

Inspect that there is continuity between each terminal.

Shift position	Tester connection	Specified value
P position	8 – 2 (E – P1)	Continuity
P position (Pull the shift lever toward you)	8 – 2 (E – P1) 8 – 7 (E – P2)	Continuity
R, N, D, 2, L position	8 – 7 (E – P2)	Continuity

If continuity is not as specified, replace the switch.

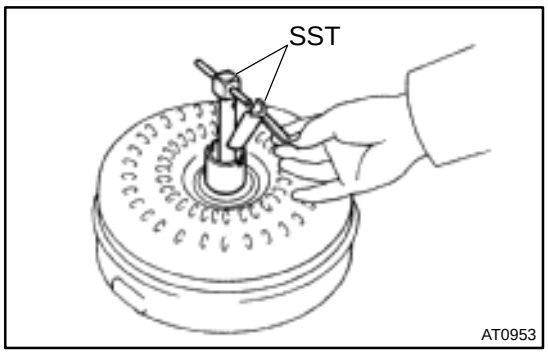

TORQUE CONVERTER CLUTCH AND DRIVE PLATE

AT01N–01

INSPECTION

1. INSPECT ONE–WAY CLUTCH

(a) Install SST in the inner race of the one–way clutch.
SST 09350–20015 (09397–22020)

(b) Install SST so that it fits in the notch of the converter hub and outer race of the one–way clutch.
SST 09350–20015 (09397–22020)

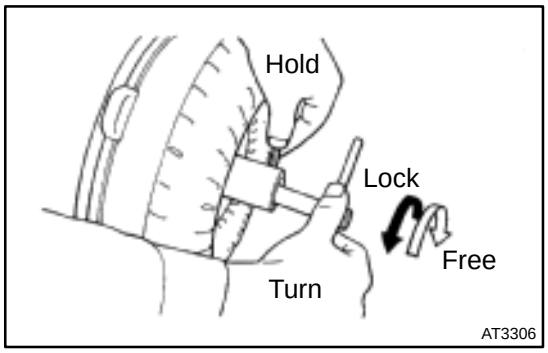

(c) With the torque converter clutch held upright, the clutch should lock when turned counterclockwise, and rotate freely and smoothly clockwise.

If necessary, clean the converter clutch and retest the clutch. Replace the converter clutch if the clutch still fails the test.

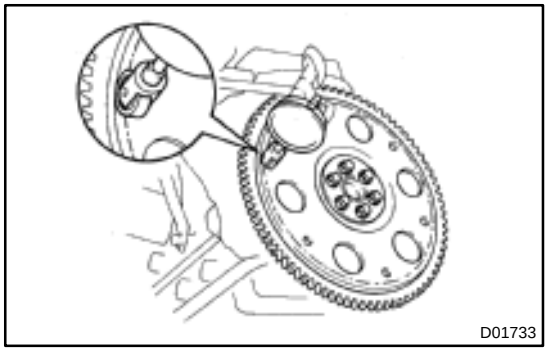

2. MEASURE DRIVE PLATE RUNOUT AND INSPECT RING GEAR

Set up a dial indicator and measure the drive plate runout.

Maximum runout: 0.20 mm (0.0079 in)

If runout is not within the specification or if the ring gear is damaged, replace the drive plate.

If installing a new drive plate, note the orientation of spacers and tighten the bolts.

Torque: 74 N·m (750 kgf·cm, 54 ft·lbf)

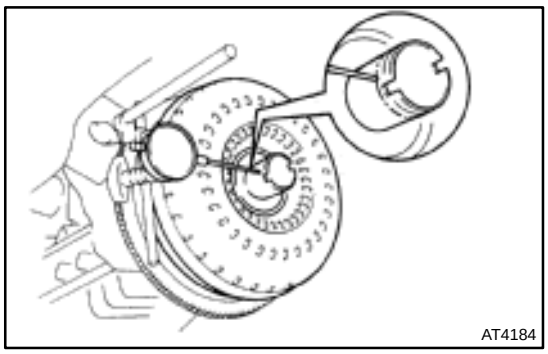

3. MEASURE TORQUE CONVERTER CLUTCH SLEEVE RUNOUT

Temporarily mount the torque converter clutch to the drive plate. Set up a dial indicator and measure the torque converter clutch sleeve runout.

Maximum runout: 0.30 mm (0.0118 in.)

If runout is not within the specification, try to correct by reorienting the installation of the converter.

HINT:

Mark the position of the torque converter clutch to ensure correct installation.

AT01M–01

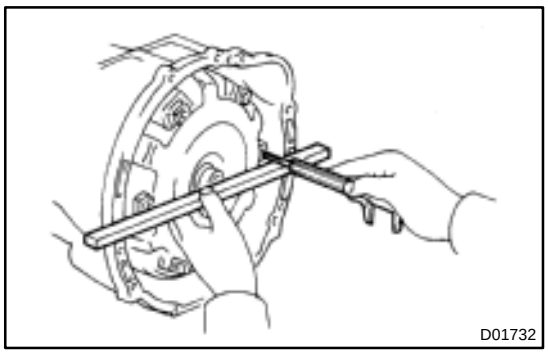

INSTALLATION

1. CHECK TORQUE CONVERTER CLUTCH INSTALLATION

Using calipers and a straight edge, measure the distance from the installed surface of the transmission housing to the installed surface of the torque converter housing.

Correct distance: More than 31.75 mm (1.2500 in.)

2. INSTALL TRANSMISSION

Installation is in the reverse order of removal.

(See page AT–33)

HINT:

- After installation, adjust the shift lever position and throttle cable.
  (See page AT–2)
- Fill and check fluid lever.
  (See page AT–2)

SHIFT LOCK SYSTEM

AT01I–01

LOCATION

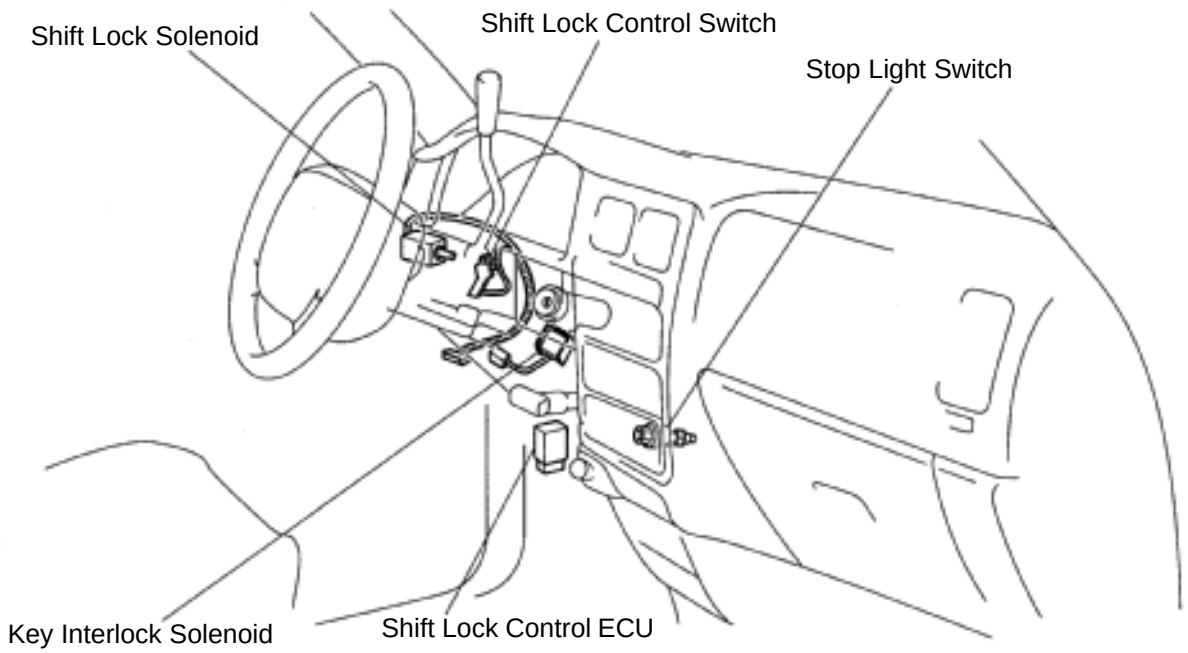

AUTOMATIC TRANSMISSION SYSTEM

OPERATION

AT018–01

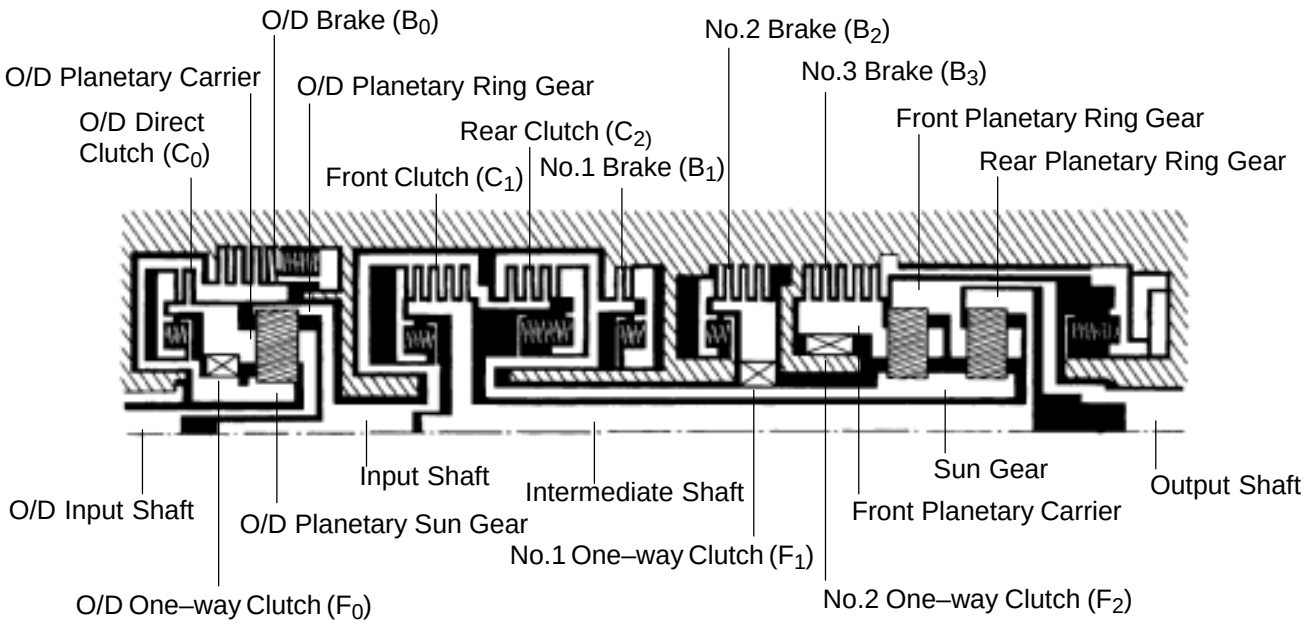

○..... Operating

Shift lever position	Gear position	C_0	C_1	C_2		B_0	B_1	B_2	B_3		F_0	F_1	F_2
				I.P.	O.P.				I.P.	O.P.			
P	Parking	○							○	○	○		
R	Reverse	○		○	○				○	○	○		
N	Neutral	○									○		
D	1st	○	○								○		○
	2nd	○	○					○			○	○	
	3rd	○	○		○			○			○		
	O/D		○		○	○		○					
2	1st	○	○								○		○
	2nd	○	○				○	○			○	○	
L	1st	○	○						○	○	○		○

I.P.: Inner Piston
O.P.: Outer Piston

D00790

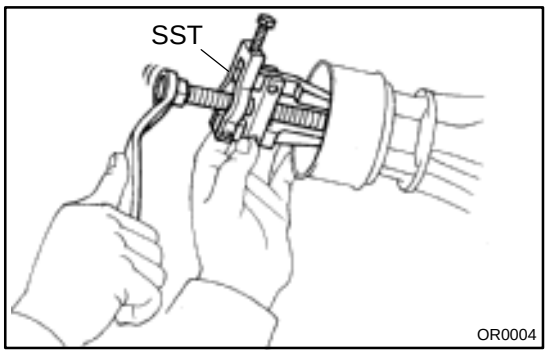

EXTENSION HOUSING OIL SEAL

AT01B–01

ON–VEHICLE REPAIR

1. REMOVE PROPELLER SHAFT
(See page PR–3)

2. REMOVE REAR OIL SEAL

Using SST, remove the oil seal.

SST 09308–10010

NOTICE:
Clean the extension housing before removing the oil seal.

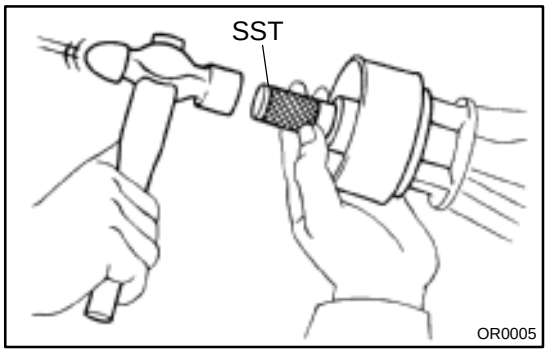

3. INSTALL NEW OIL SEAL

Coat the lip of a new oil seal with MP grease and using SST and a hammer, carefully drive the oil seal in as far as it will go.

SST 09325–20010

4. INSTALL PROPELLER SHAFT
(See page PR–8)

5. CHECK FLUID LEVEL
(See page AT–2)

GOVERNOR BODY

AT01C–01

ON–VEHICLE REPAIR

1. REMOVE PROPELLER SHAFT
(See page PR–3)

2. DISCONNECT VEHICLE SPEED SENSOR CONNECTOR AND REMOVE VEHICLE SPEED SENSOR
(See page AT–21)

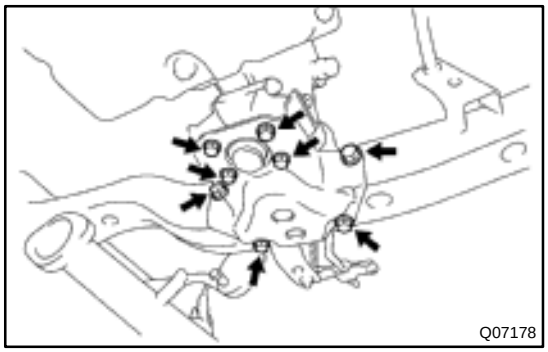
Q07178

3. REMOVE REAR MOUNTING BRACKET FROM REAR SUPPORT MEMBER

Remove the 8 bolts and rear mounting bracket from the rear support member.

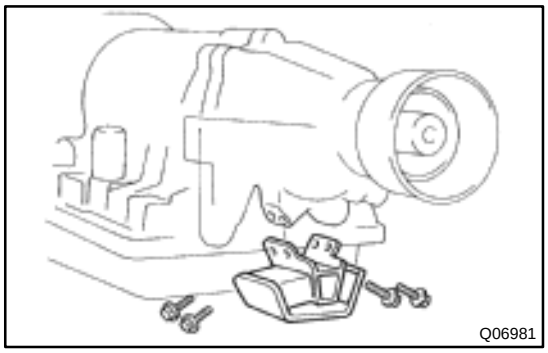
Q06981

4. REMOVE REAR MOUNTING INSULATOR FROM EXTENSION HOUSING

Remove the 4 bolts and rear mounting insulator from the extension housing.

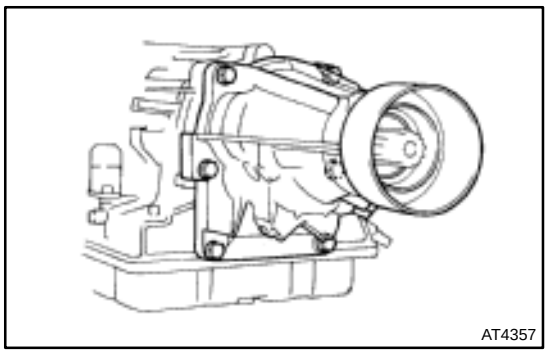
AT4357

5. REMOVE EXTENSION HOUSING

(a) Remove the 6 bolts, housing and gasket.

If necessary, tap the extension housing with a plastic hammer or block of wood to loosen it.

(b) Remove the gasket and oil apply pipe from the extension housing.

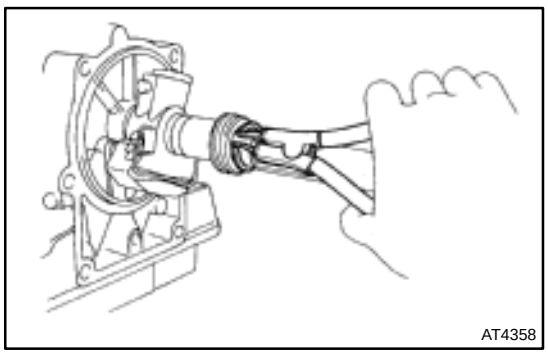
AT4358

6. REMOVE VEHICLE SPEED SENSOR DRIVE GEAR

(a) Using snap ring pliers, remove the snap ring.

(b) Slide off the vehicle speed sensor drive gear.

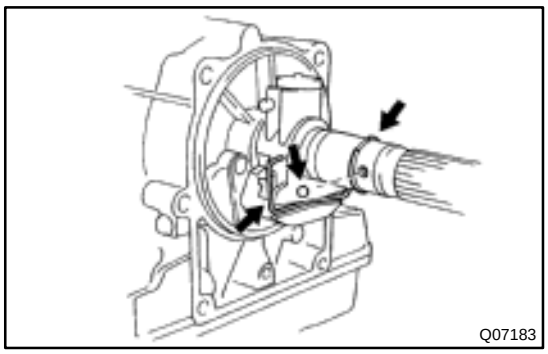

(c) Remove the lock ball and snap ring.

7. REMOVE GOVERNOR BODY FROM OUTPUT SHAFT

(a) Using a large screwdriver, remove the retaining clip.

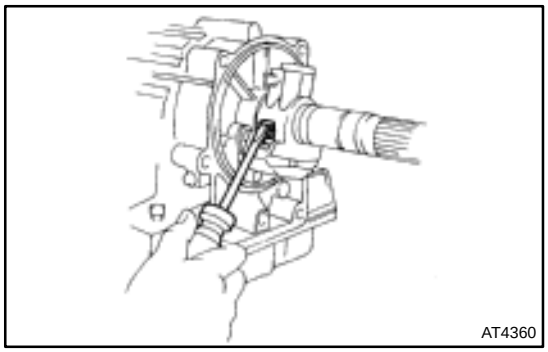

(b) Using a screwdriver unstake the lock plate, and remove the bolt and lock plate.

(c) Remove the governor body from the output shaft.

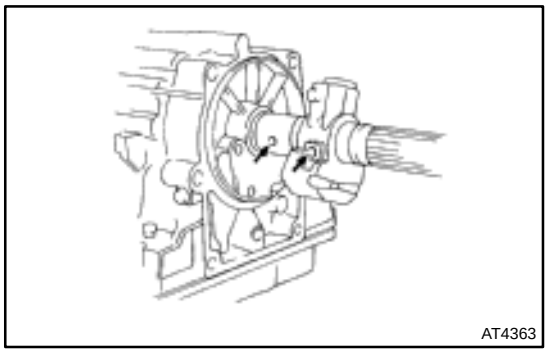

8. INSTALL GOVERNOR BODY TO OUTPUT SHAFT

(a) Place the governor body on the output shaft.

HINT:

Align the governor body and bolt hole on the output shaft.

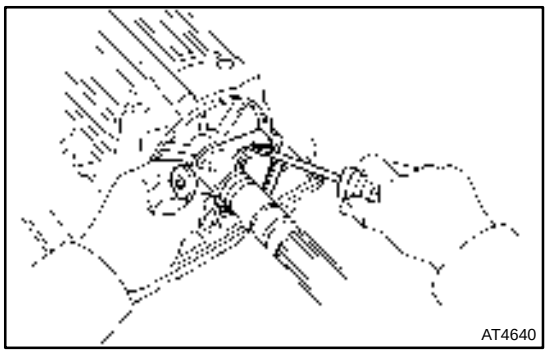

(b) While lifting the retaining clip with a screwdriver, slide the governor body and insert the retaining clip end into the hole on the output shaft.

(c) Install a new lock plate with the bolt.

Torque: 3.9 N·m (40 kgf·cm, 35 in.·lbf)

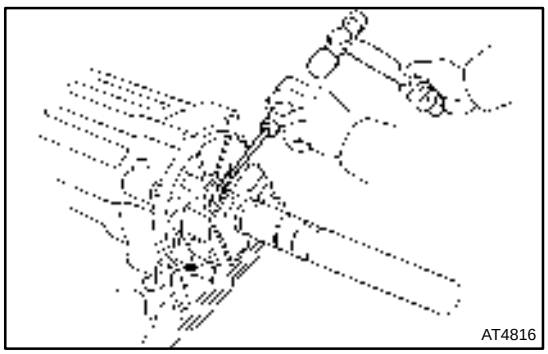

(d) Stake the lock plate.

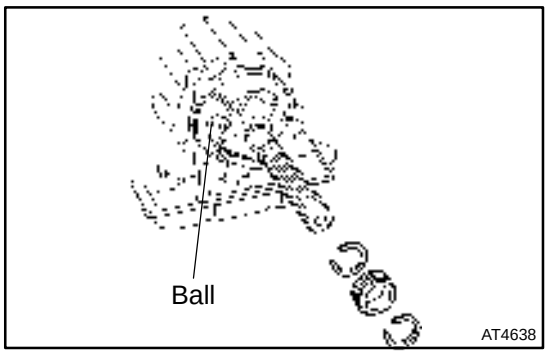

9. INSTALL VEHICLE SPEED SENSOR DRIVE GEAR

(a) Using a snap ring expander, install the snap ring.
(b) Install the ball into the hole on the output shaft.
(c) Align the groove of the drive gear with the ball, and install the drive gear.
(d) Using a snap ring expander, install the snap ring.

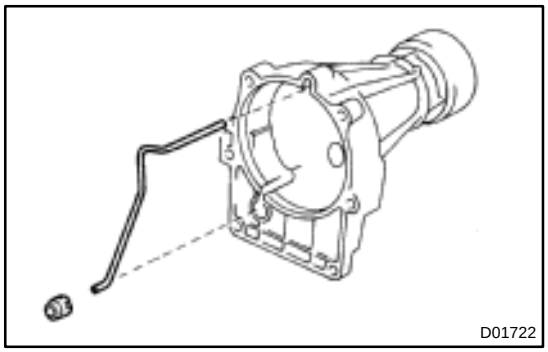

10. INSTALL EXTENSION HOUSING

(a) Install the oil apply tube and a new gasket to the extension housing.
(b) Install the extension housing with a new gasket to the case.
(c) Apply sealant to the bolts.
Sealant:
Part No. 08833–00080, THREE BOND 1344, LOCTITE 242 or equivalent

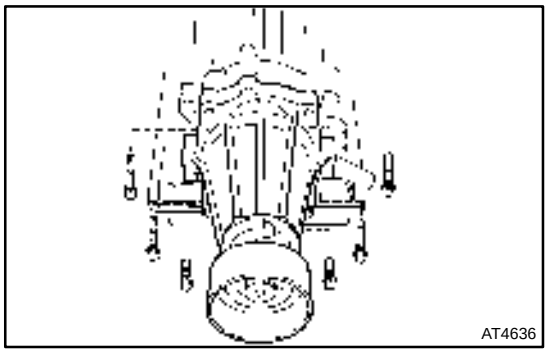

(d) Tighten the 6 bolts.
Torque: 36 N·m (370 kgf·cm, 27 ft·lbf)

HINT:
The 2 lower bolts are shorter.

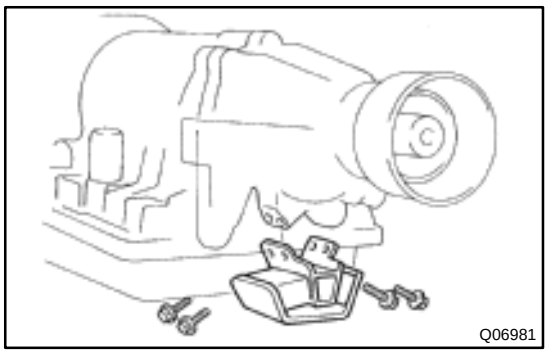

11. INSTALL REAR MOUNTING INSULATOR TO EXTENSION HOUSING

Install the rear mounting insulator to the extension housing with the 4 bolts.
Torque: 25 N·m (260 kgf·cm, 19 ft·lbf)

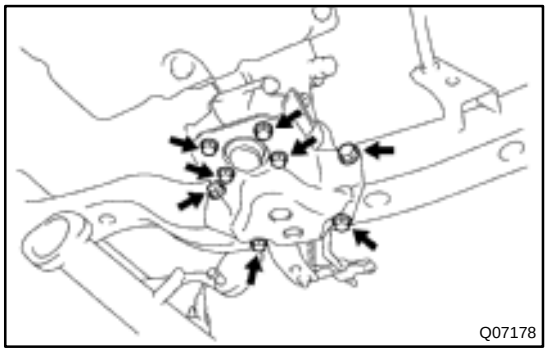

12. INSTALL ENGINE REAR MOUNTING BRACKET TO REAR SUPPORT MEMBER

Install the rear mounting bracket to the rear support member with the 8 bolts.
Torque:
Rear mounting side: 18 N·m (185 kgf·cm, 13 ft·lbf)
Frame side: 58 N·m (590 kgf·cm, 42 ft·lbf)

13. **INSTALL VEHICLE SPEED SENSOR AND CONNECT SPEED SENSOR CONNECTOR**
(See page AT–21)
14. **INSTALL PROPELLER SHAFT**
(See page PR–8)

VEHICLE SPEED SENSOR

AT01D–01

ON–VEHICLE REPAIR

1. DISCONNECT VEHICLE SPEED SENSOR CONNECTOR

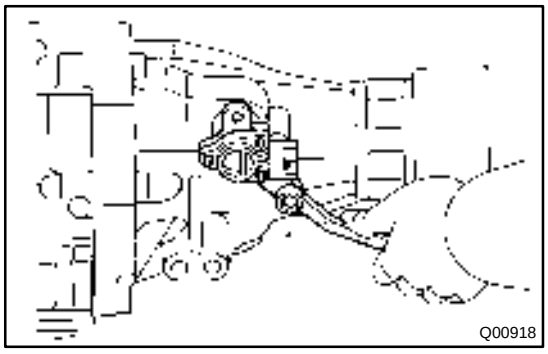

2. REMOVE VEHICLE SPEED SENSOR ASSEMBLY

(a) Remove the bolt and the vehicle speed sensor assembly.

(b) Remove the clip and the driven gear from the vehicle speed sensor.

(c) Remove the O–ring from the vehicle speed sensor.

3. INSTALL VEHICLE SPEED SENSOR ASSEMBLY

(a) Coat a new O–ring with ATF and install it to the vehicle speed sensor.

(b) Install the driven gear and the clip to the vehicle speed sensor.

(c) Install the vehicle speed sensor assembly with the bolt.
Torque: 16 N·m (160 kgf·cm, 12 ft·lbf)

4. CONNECT VEHICLE SPEED SENSOR CONNECTOR

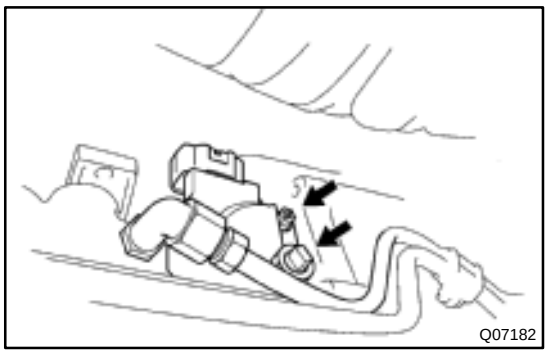

PARK/NEUTRAL POSITION (PNP) SWITCH

AT01E–01

ON–VEHICLE REPAIR

1. REMOVE FRONT EXHAUST PIPE AND HEAT INSULATOR

2. DISCONNECT OIL COOLER PIPE

(a) Remove the 3 oil cooler pipe clamps.

(b) Disconnect the oil cooler pipe.

3. REMOVE ELBOW AND O–RING

4. REMOVE PARK/NEUTRAL POSITION SWITCH

(a) Disconnect the connector.

(b) Pry off the lock washer and remove the nut.

(c) Remove the bolt and park/neutral position switch.

5. INSTALL PARK/NEUTRAL POSITION SWITCH

(a) Install the park/neutral position switch and bolt.
Torque: 5.4 N·m (55 kgf·cm, 48 in.·lbf)

(b) Install a new lock plate and the nut.
Torque: 3.9 N·m (40 kgf·cm, 35 in.·lbf)

(c) Bend claws on the lock plate to fix the nut.

(d) Adjust the park/neutral position switch.
(See page AT–2)

(e) Connect the connector.

6. INSTALL ELBOW AND NEW O–RING
Torque: 34 N·m (350 kgf·cm, 25 ft·lbf)

7. CONNECT OIL COOLER PIPES

(a) Connect the oil cooler pipe.
Torque: 34 N·m (350 kgf·cm, 25 ft·lbf)

(b) Install the 3 oil cooler pipe clamps.

8. INSTALL FRONT EXHAUST PIPE AND HEAT INSULATOR

VALVE BODY ASSEMBLY

AT01F–01

ON–VEHICLE REPAIR

1. CLEAN TRANSMISSION EXTERIOR

To prevent contamination, clean the exterior of the transmission.

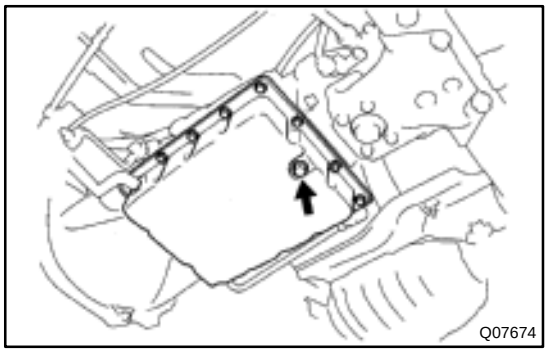

2. REMOVE DRAIN PLUG AND DRAIN ATF

3. REMOVE OIL PAN

NOTICE:

- **Some fluid will remain in the oil pan.**
- **Be careful not to damage the filler pipe.**

(a) Remove the 14 bolts, and carefully remove the oil pan.

(b) Remove the gasket.

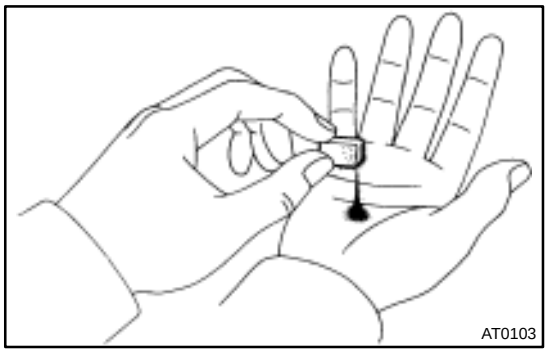

4. EXAMINE PARTICLES IN PAN

Remove the magnets and use them to collect any steel chips. Look carefully at the magnetic and non–magnetic chips to anticipate what type of wear you will find in the transmission.

- Steel (magnetic): bearing, gear and plate wear
- Brass (non–magnetic): bushing wear

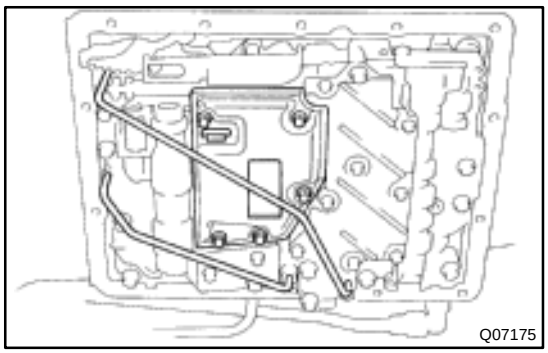

5. REMOVE OIL PIPES

Pry up both pipe ends with a large screwdriver and remove the 2 pipes.

NOTICE:

Be careful not to bend or damage the pipes.

6. REMOVE OIL STRAINER

Remove the 5 bolts, oil strainer and the gasket.

NOTICE:

Be careful as some oil will come out with the strainer.

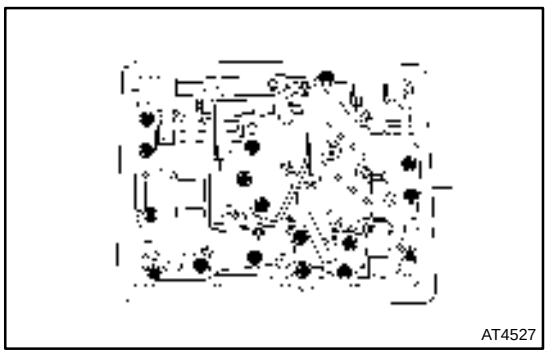

7. REMOVE VALVE BODY

(a) Remove the 17 bolts.

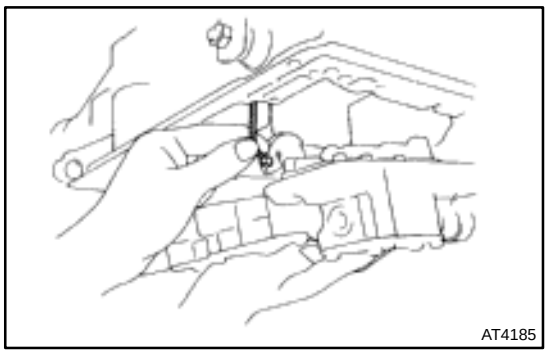

(b) Disconnect the throttle cable from the cam and remove the valve body.

8. INSTALL VALVE BODY

(a) While holding the cam down with your hand, connect the throttle cable.

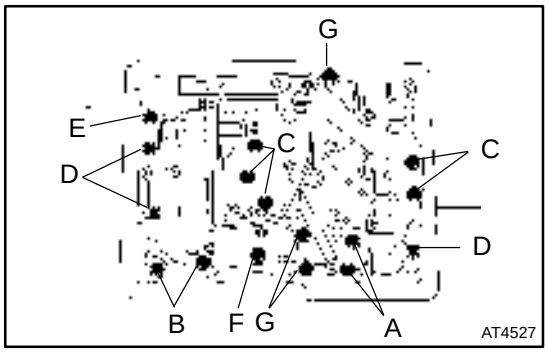

(b) Install the 17 bolts as shown in the illustration.
Torque: 10 N·m (100 kgf·cm, 7 ft·lbf)

HINT:

Each bolt length is indicated below.

Bolt length:
A: 20 mm (0.79 in.)
B: 25 mm (0.98 in.)
C: 30 mm (1.18 in.)
D: 35 mm (1.42 in.)
E: 40 mm (1.57 in.)
F: 47 mm (1.85 in.)
G: 55 mm (2.17 in.)

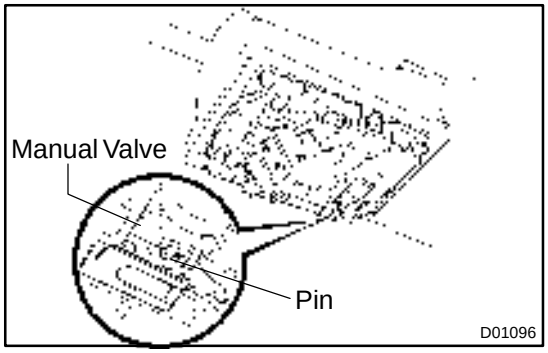

(c) Align the groove of the manual valve to the pin of the lever.

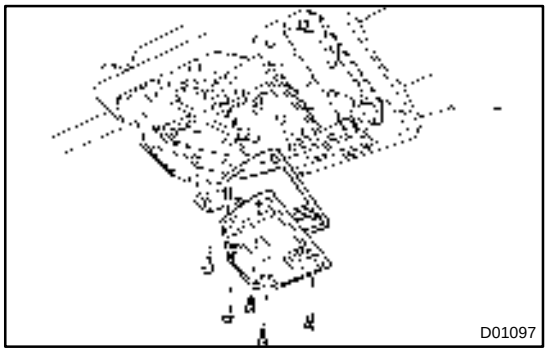

9. INSTALL OIL STRAINER

(a) Install a new gasket to the oil strainer.

(b) Install the oil strainer to the valve body with the 5 bolts.
Torque: 5.4 N·m (55 kgf·cm, 48 in.·lbf)

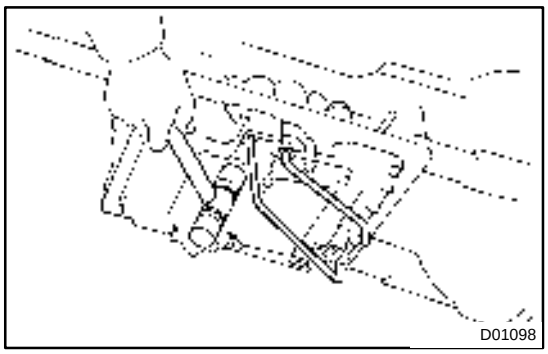

10. INSTALL OIL PIPES

Using a plastic hammer, install the 2 pipes.

NOTICE:

Be careful not to bend or damage the pipe.

11. INSTALL OIL PAN

(a) Install the 2 magnets in the oil pan.

NOTICE:

Make sure that the magnets do not interfere with the oil pipes.

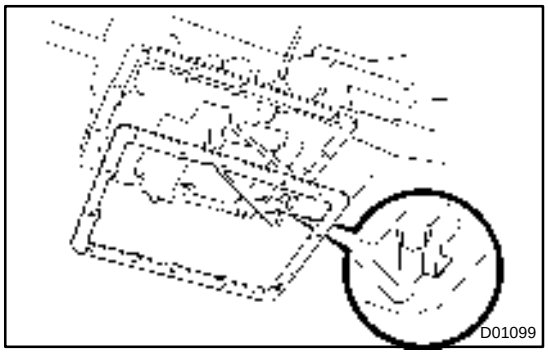

(b) Install a new gasket to the transmission case.

HINT:

Align the cut part of the gasket and case.

(c) Install the oil pan with the 14 bolts.

Torque: 4.4 N·m (45 kgf·cm, 39 in.·lbf)

NOTICE:

Be careful not to damage the filler pipe.

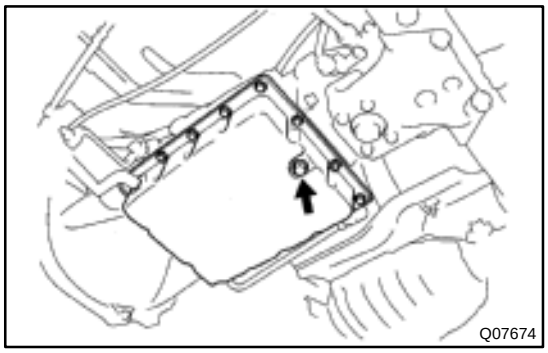

12. INSTALL DRAIN PLUG

Torque: 20 N·m (205 kgf·cm, 15 ft·lbf)

13. FILL ATF AND CHECK FLUID LEVEL

(See page AT–2)

PARKING LOCK PAWL

AT01G–01

ON–VEHICLE REPAIR

1. REMOVE DRAIN PLUG AND DRAIN ATF

2. REMOVE VALVE BODY

(See page AT–23)

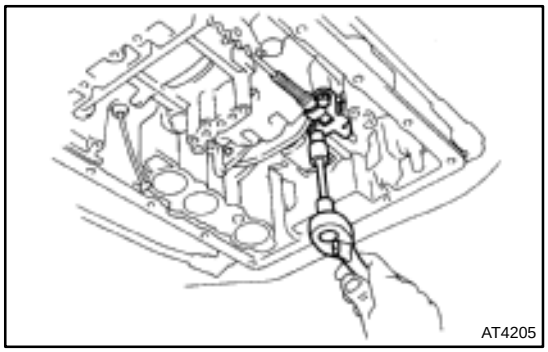

3. REMOVE PARKING LOCK PAWL BRACKET

Remove the 2 bolts, wave washers and parking lock pawl bracket.

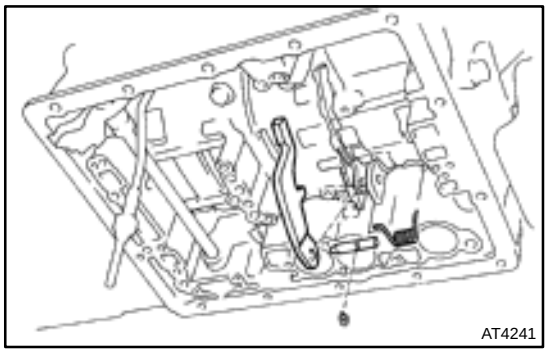

4. REMOVE PARKING LOCK PAWL

(a) Remove the spring from parking lock pawl pivot pin.

(b) Remove the pivot pin and parking lock pawl.

(c) Remove the E–ring from the pivot pin.

5. INSTALL PARKING LOCK PAWL

(a) Install the E–ring to the pivot pin.

(b) Install the parking lock pawl, pivot pin and spring.

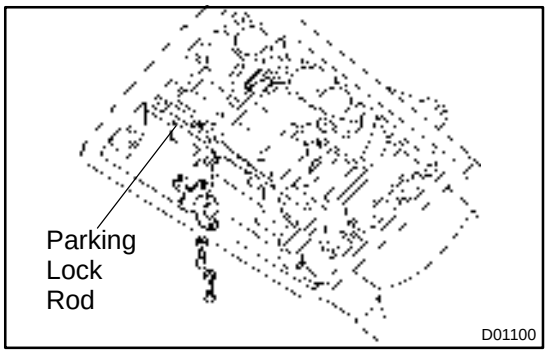

6. INSTALL PARKING LOCK PAWL BRACKET

Install the bracket and tighten the 2 bolts with the wave washers.

Torque: 7.4 N·m (75 kgf·cm, 65 in.·lbf)

HINT:

Push the parking lock rod fully forward.

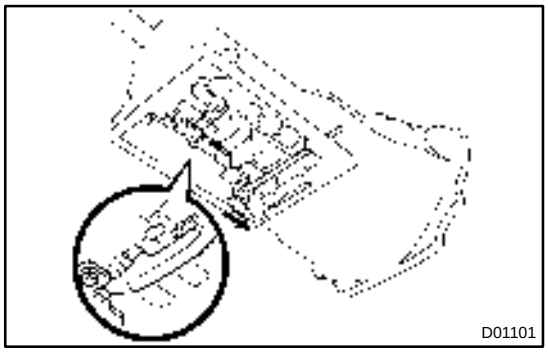

7. CHECK PARKING LOCK PAWL OPERATION

Shift the manual valve lever to the P position, and check the planetary ring gear is correctly locked up by the lock pawl.

8. INSTALL VALVE BODY

(See page AT–23)

9. INSTALL DRAIN PLUG

Torque: 20 N·m (205 kgf·cm, 15 ft·lbf)

10. FILL ATF AND CHECK FLUID LEVEL

(See page AT–2)

THROTTLE CABLE

AT01H–01

ON–VEHICLE REPAIR

1. DISCONNECT THROTTLE CABLE FROM ENGINE

Disconnect the cable from the throttle linkage.

2. REMOVE PARK/NEUTRAL POSITION SWITCH
(See page AT–22)

3. DISCONNECT THROTTLE CABLE FROM TRANSMISSION HOUSING

Remove the bolt and disconnect the cable.

4. REMOVE DRAIN PLUG AND DRAIN ATF

5. REMOVE VALVE BODY
(See page AT–23)

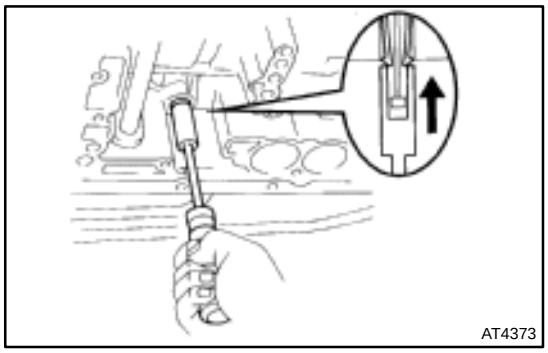

6. REMOVE THROTTLE CABLE FROM TRANSMISSION CASE

(a) Using a 10 mm socket driver, push the throttle cable end to remove it.

(b) Remove the O–ring.

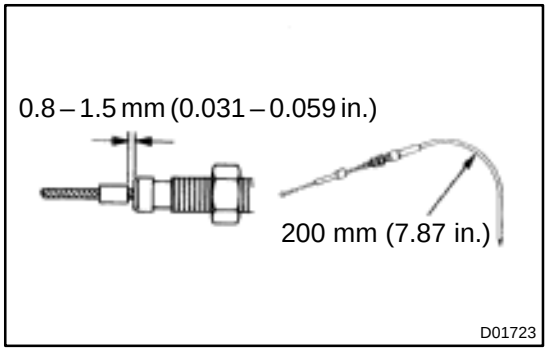

7. INSTALL THROTTLE CABLE TO TRANSMISSION CASE

If the throttle cable is new, perform the following operations (a) to (c).

(a) Bend the cable so there is a radius of about 200 mm (7.87 in.).

(b) Pull the inner cable lightly until a slight resistance is felt, and hold it.

(c) Stake the stopper 0.8 – 1.5 mm (0.031 – 0.059 in.) from the end of outer cable.

(d) Coat a new O–ring with ATF and install it to the cable.

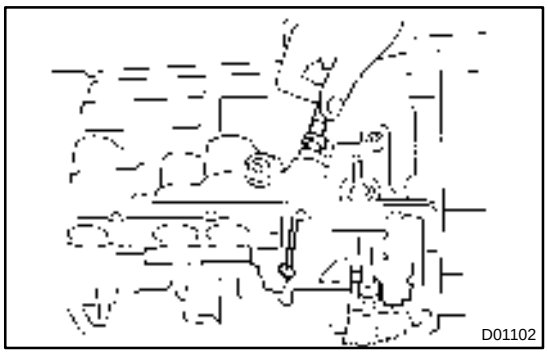

(e) Install the cable to the case.

8. INSTALL VALVE BODY
(See page AT–23)

9. CONNECT THROTTLE CABLE TO TRANSMISSION HOUSING

Connect the cable with the bolt.

10. INSTALL PARK/NEUTRAL POSITION SWITCH
(See page AT–22)

11. CONNECT THROTTLE CABLE TO ENGINE

12. INSTALL DRAIN PLUG
Torque: 20 N·m (205 kgf·cm, 15 ft·lbf)

13. FILL ATF AND CHECK FLUID LEVEL
(See page AT–2)

14. ADJUST THROTTLE CABLE
(See page AT–2)

15. TEST DRIVE VEHICLE

AT01L–01

REMOVAL

1. REMOVE TRANSMISSION WITH ENGINE
(See page EM–72)

2. REMOVE LEFT AND RIGHT SIDE STIFFENER PLATES

(a) Remove the 8 bolts, 2 stiffener plates and rear end plate.
Torque: 37 N·m (380 kgf·cm, 27 ft·lbf)

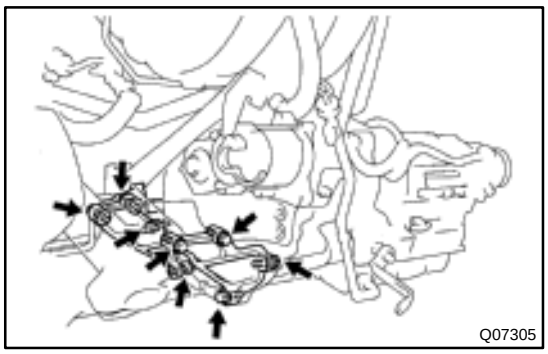
Q07305

(b) Turn the crankshaft to gain access and remove the 6 bolts with holding the crankshaft pulley set bolt with a wrench.
Torque: 41 N·m (420 kgf·cm, 30 ft·lbf)

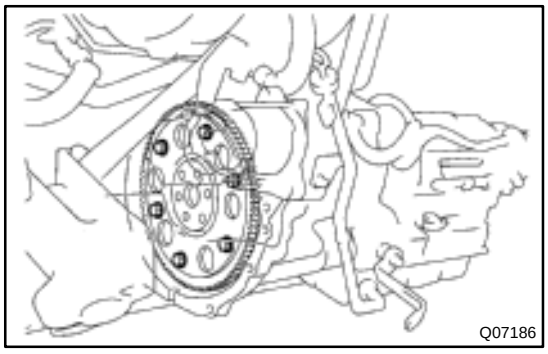
Q07186

3. REMOVE STARTER

Remove the 2 bolts and starter.
Torque: 39 N·m (400 kgf·cm, 29 ft·lbf)

4. REMOVE TRANSMISSION FROM ENGINE

(a) Remove the 3 transmission mounting bolts from the engine.
Torque: 71 N·m (730 kgf·cm, 53 ft·lbf)

(b) Pull out the transmission toward the rear.

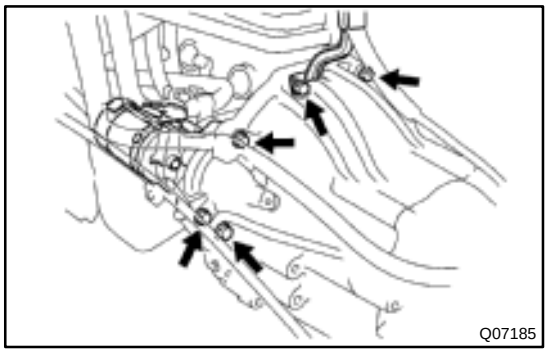
Q07185

AT019–02

TROUBLESHOOTING

1. GENERAL INFORMATION

(a) Troubles occurring with the automatic transmission can be caused by either the engine, electrical control or the transmission itself. These 3 areas should be distinguished before proceeding with troubleshooting.

(b) Troubleshooting should begin with the simplest operation, working up in order of difficulty, but first determine whether the trouble lies within the engine, electrical control or transmission.

(c) Proceed with the inspection as follows:

PRELIMINARY CHECK

(a) Check the tire inflation.
(b) Check the idle speed.
(c) Check the fluid level and fluid condition.
(d) Check the throttle cable mark.
(e) Check the shift linkage.
(f) Check the park/neutral position switch.

↓

STALL TEST

Check the engine and torque converter clutch.

↓

TIME LAG TEST

Check the automatic transmission (each clutch, brake and gear) for wear.

↓

HYDRAULIC TEST

Measure the line pressure and make a basic check of fluid circuit.

↓

ROAD TEST

Check that if trouble lies within the automatic transmission. If noisy or vibrating, the possible cause could be with the engine, drive shaft, tires, etc.

↓

SYMPTOM PROBLEM TABLE

2. PRELIMINARY CHECK

(a) Check the fluid level.

HINT:

- Drive the vehicle so that the engine and transmission are at the normal operating temperature.
  ATF temperature: 70 – 80 ˚C (158 – 176 ˚F)
- Only use the COOL range on the dipstick as a rough reference when the fluid is replaced or the engine does not run.
  (1) Park the vehicle on a level surface and set the parking brake.
  (2) With the engine idling and the brake pedal depressed, shift the shift lever into all positions from the P to L position and return to the P position.
  (3) Pull out the oil level gauge and wipe it clean.
  (4) Push it back fully into the pipe.

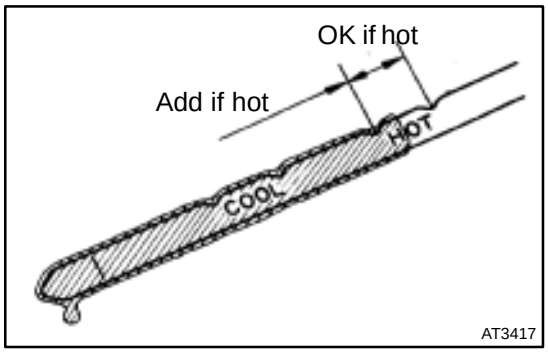

(5) Pull it out and check that the fluid level is in the HOT range. If the level is not within the HOT range, add new ATF.

Fluid type: ATF D–II or DEXRON®III (DEXRON®II)

NOTICE:

Do not overfill.

(b) Check the fluid condition.

If the fluid smells burnt or is black, replace it.



(c) Replace the ATF.
(1) Using a hexagon wrench, remove the drain plug and drain the ATF.
(2) Using a hexagon wrench, install the drain plug securely.
(3) Add new ATF through the filler pipe.

Fluid type: ATF D–II or DEXRON®III (DEXRON®II)

Capacity:

Dry fill: 6.5 liters (6.9 US qts, 5.7 lmp.qts)

Drain and refill: 2.4 liters (2.5 US qts, 2.1 lmp.qts)

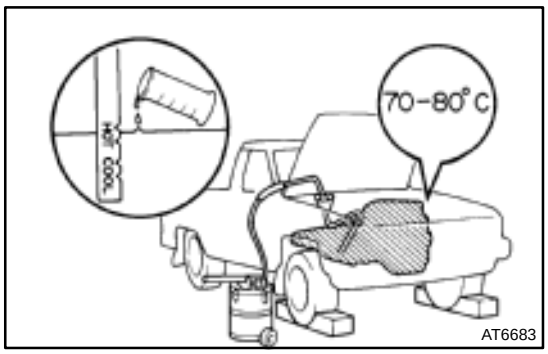

(4) Start the engine and shift the shift lever into all positions from the P position through the L position and then shift it into the P position.
(5) With the engine idling, check the fluid level. Add fluid up to the COOL level on the dipstick.
(6) Check the fluid level at the normal operating temperature 70 – 80 °C (158 – 176 °F) and add as necessary.

NOTICE:
Do not overfill.

(d) Inspect and adjust the throttle cable.
(1) Fully depress the accelerator pedal and check that the throttle valve opens fully.

HINT:
If the throttle valve does not open fully, adjust the accelerator cable.

(2) Fully depress the accelerator.

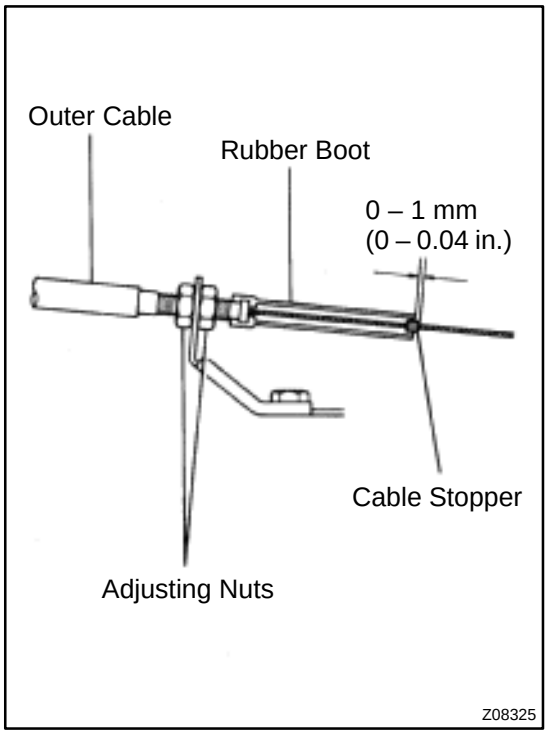

(3) Loosen the adjustment nuts.
(4) Adjust the outer cable so that the distance between the end of the boot and stopper on the cable is the standard.

Standard boot and cable stopper distance:
0 – 1 mm (0 – 0.04 in.)

(5) Tighten the adjusting nuts.
(6) Recheck the adjustment.

(e) Inspect the shift control cable.
When shifting the shift lever from the N position to other positions, check that the lever can be shifted smoothly and accurately to each position and that the position indicator correctly indicates the position.

If the indicator is not aligned with the correct position, carry out the following adjustment procedures.

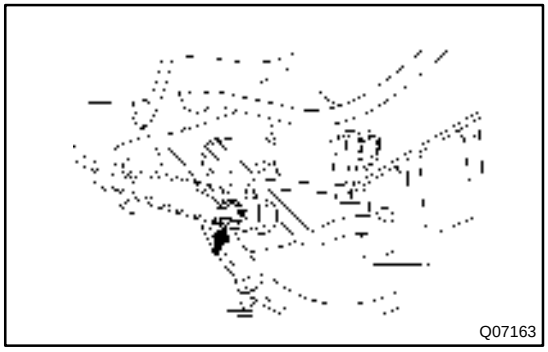

(f) Adjust the shift control cable.
(1) Loosen the nut on the control shaft lever. Push the control shaft lever fully rearward.
(2) Return the control shaft lever 2 notches to the N position.
(3) Set the shift lever to the N position.
(4) While holding the shift lever lightly toward the R position side, tighten the nut.

Torque: 13 N·m (130 kgf·cm, 9 ft·lbf)

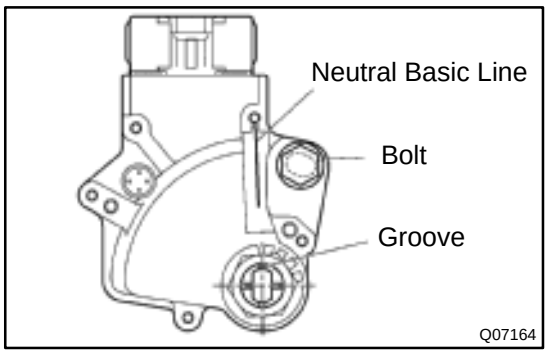

(g) Adjust the park/neutral position switch.

If the engine will start with shift lever in any position other than the N or P position, adjustment is required.

(1) Loosen the park/neutral position switch bolt and set the shift lever to the N position.
(2) Align the groove and neutral basic line.
(3) Hold in position and tighten the bolt.

Torque: 5.4 N·m (55 kgf·cm, 48 in.·lbf)

3. MEASURE STALL SPEED

The object of this test is to check the overall performance of the transmission and engine by measuring the maximum engine speeds in the D and R positions.

NOTICE:

- **Do the test at normal operating ATF temperature 50 – 80 ˚C (122 – 176 ˚F).**
- **Do not continuously run this test for longer than 5 seconds.**
- **To ensure safety, conduct this test in a wide, clear, level area which provides good traction.**

(1) Chock the 4 wheels.
(2) Fully apply the parking brake.
(3) Connect OBDII scan tool or TOYOTA hand–held tester to DLC3.
(4) Keep your left foot pressing firmly on the brake pedal, and start the engine.
(5) Shift into the D position. Fully depress the accelerator pedal with your right foot. Quickly read the stall speed at this time.

Stall speed: 1,850 ± 150 rpm

(6) Do the same test in the R position.

Stall speed: 1,850 ± 150 rpm

EVALUATION

Problem	Possible cause
(a) Stall speed low in D and R positions.	• Engine output may be insufficient • Stator one–way clutch is not operating properly HINT: If the engine speed is more than 600 rpm below the specified value, the torque converter clutch could be faulty.
(b) Stall speed high in D position.	• Line pressure too low • Forward clutch slipping • No.2 one–way clutch is not operating properly • O/D one–way clutch is not operating properly
(c) Stall speed high in R position.	• Line pressure too low • Rear clutch slipping • No.3 brake slipping • O/D one–way clutch is not operating properly
(d) Stall speed high in D and R positions.	• Line pressure too low • Improper fluid level • O/D one–way clutch is not operating properly

4. MEASURE TIME LAG

When the shift lever is shifted while the engine is idling, there will be a certain time lapse or lag before the shock can be felt. This is used for checking the condition of the O/D direct clutch, front clutch, rear clutch and No.3 brake.

NOTICE:

- **Do the test at normal operating ATF temperature 50 – 80 °C (122 – 176 °F).**
- **Make sure to allow 1 minute interval between tests.**
- **Perform measurement 3 times and take the average value.**

(1) Fully apply the parking brake.

(2) Start the engine and check the idle speed. (In N position and A/C OFF)

Idling speed: 700 ± 50 rpm

(3) Shift the shift lever from the N to D position. Using a stop watch, measure the time it takes from the shift lever is shifted until the shock is felt.

Time lag: Less than 1.2 seconds

(4) In the same way, measure the time lag for N → R.

Time lag: Less than 1.5 seconds

EVALUATION (If N → D or N → R time lag is longer than the specified):

Problem	Possible cause
N → D time lag is longer	• Line pressure too low • Front clutch worn • O/D one–way clutch is not operating properly
N → R time lag is longer	• Line pressure too low • Rear clutch worn • No.3 brake worn • O/D one–way clutch is not operating properly

5. HYDRAULIC TEST

(a) Measure the line pressure.

(1) Warm up the ATF.

(2) Remove the transmission case test plug and connect SST (See page AT–32).

SST 09992–00095 (09992–00112, 09992–00271)

NOTICE:

Do the test at normal operating ATF temperature 50 – 80 °C (122 – 176 °F).

(3) Chock the 4 wheels.

(4) Fully apply the parking brake.

(5) Start the engine and check the idle speed.

(6) Shift into the D position, keep your left foot pressing firmly on the brake pedal and while modulating the accelerator pedal with the right foot, measure the line pressure at the engine speeds specified in the table.

(7) In the same way, do the test in the R position.

Specified line pressure:

D position	Idling	441 – 500 kPa (4.5 – 5.1 kgf/cm^2, 64 – 73 psi)
	Stall	990 – 1,167 kPa (10.1 – 11.9 kgf/cm^2, 144 – 169 psi)
R position	Idling	667 – 745 kPa (6.8 – 7.6 kgf/cm^2, 97 – 108 psi)
	Stall	1,471 – 1,863 kPa (15.0 – 19.0 kgf/cm^2, 213 – 270 psi)

(8) If the measured pressures are not up to the specified values, recheck the throttle cable adjustment and retest.

EVALUATION

Problem	Possible cause
If the measured values at all positions are higher.	• Throttle cable out of adjustment • Throttle valve defect • Regulator valve defect
If the measured values at all positions are lower.	• Throttle cable out of adjustment • Throttle valve defect • Regulator valve defect • Oil pump defect • O/D direct clutch defect
If pressure is low in the D position only.	• D position circuit fluid leakage • Front clutch defect
If pressure is low in the R position only.	• R position circuit fluid leakage • Rear clutch defect • No.3 brake defect

(b) Measure the governor pressure.

(1) Warm up the ATF.

(2) Remove the transmission case test plug and connect SST (See page AT–32).

SST 09992–00095 (09992–00112, 09992–00271)

NOTICE:

Do the test at normal operating ATF temperature 50 – 80 °C (122 – 176 °F).

(3) Check the parking brake to see that it is not applied.

(4) Start the engine.

(5) Shift into the D position and measure the governor pressures at the speeds specified in the table.

EVALUATION

Problem	Possible cause
If governor pressure is defective.	• Line pressure defect • Fluid leakage in governor pressure circuit • Governor valve operation defect

Specified governor pressure:

Tire size: P195/75R14

Output shaft rpm	Vehicle speed (Reference)	Governor pressure
1,000	32 km/h (20 mph)	98 – 157 kPa (1.0 – 1.6 kgf/cm^2, 14 – 23 psi)
1,800	57 km/h (35 mph)	196 – 255 kPa (2.0 – 2.6 kgf/cm^2, 28 – 37 psi)
3,500	111 km/h (69 mph)	500 – 618 kPa (5.1 – 6.3 kgf/cm^2, 73 – 90 psi)

Tire size: P215/70R14

Output shaft rpm	Vehicle speed (Reference)	Governor pressure
1,000	32 km/h (20 mph)	98 – 157 kPa (1.0 – 1.6 kgf/cm^2, 14 – 23 psi)
1,800	58 km/h (36 mph)	196 – 255 kPa (2.0 – 2.6 kgf/cm^2, 28 – 37 psi)
3,500	113 km/h (70 mph)	500 – 618 kPa (5.1 – 6.3 kgf/cm^2, 73 – 90 psi)

6. ROAD TEST

NOTICE:

Do this test at normal operating ATF temperature 50 – 80 ˚C (122 – 176 ˚F).

(a) D position test.

Shift into the D position and while driving with the accelerator pedal held constantly with the throttle valve fully open and the O/D main switch ON, check on the following points.

(1) 1 → 2, 2 → 3 and 3 → O/D up–shifts take place and also that the shift points conform to those shown in the automatic shift schedule (See page SS–51).

HINT:

3 → O/D up–shift does not take place with a throttle valve opening of more than 86% or engine coolant temperature below 55˚C (122˚F).

EVALUATION

Problem	Possible cause
If there is no 1 – 2 up–shift.	• Governor valve is defective • 1 – 2 shift valve is stuck
If there is no 2 – 3 up–shift.	• 2 – 3 shift valve is stuck
If there is no 3–O/D up–shift (throttle valve opening less than 86%)	• 3 – 4 shift valve is stuck • Solenoid valve or circuit defective
If the shift point is defective.	• Throttle cable out of adjustment • Throttle valve, 1 – 2 shift valve, 2 – 3 shift valve, 3 – 4 shift valve etc. are defective

(2) In the same way, check the shock and slip at 1 → 2, 2 → 3 and 3 → O/D up–shifts.

EVALUATION

Problem	Possible cause
If the shock is excessive.	• Line pressure is too high • Accumulator is defective

(3) Run in the 3rd gear or O/D of the D position and check for abnormal noise and vibration.

HINT:

This check must be made with extreme care as noise and vibration could also be due to imbalance in the propeller shaft, differential, tires, and torque converter clutch, etc.

(4) While running in the 2nd, 3rd and O/D gears of the D position, check that the possible vehicle speed limits for 2 → 1, 3 → 2 and O/D → 3 kick–downs conform to those indicated on the automatic shift schedule (See page SS–51).

HINT:

O/D → 3 kick–down is always possible with a throttle valve opening of more than 86%.

(5) Check the abnormal shock and slip at kick–down.

(b) 2 position test.

Shift into the 2 position and check on the following points while driving with the accelerator pedal held constantly at the fully throttle valve opening position.

(1) Check to see that the 1→2 up–shift takes place and that the shift point conforms to that shown on the automatic shift schedule (See page SS–51).

(2) While running in the 2 position of the 2 nd gear, release the accelerator pedal and check the engine braking effect.

EVALUATION

Problem	Possible cause
If these is no engine braking effect.	• No.1 brake is defective.

(3) Check for abnormal noise during acceleration and deceleration.

(4) Check the shock during up–shift and down–shift.

(c) L position test.

(1) While running in the L position, check that there is no up–shift to 2nd gear.

(2) While running in the L position, release the accelerator pedal and check the engine braking effect.

EVALUATION

Problem	Possible cause
If these is no engine braking effect.	• No.3 brake is defective.

(3) Check for abnormal noise during acceleration and deceleration.

(d) R position test.

Shift into the R position and check for slipping while starting at wide open throttle.

CAUTION:

Before conducting this test, ensure that the test area is free from personnel and obstruction.

(e) P position test.

Stop the vehicle on a gradient (more than 5°) and after shifting into the P position, release the parking brake. Then check that the parking lock pawl holds the vehicle in place.

7. ELECTRIC CONTROL SYSTEM

LOCATION

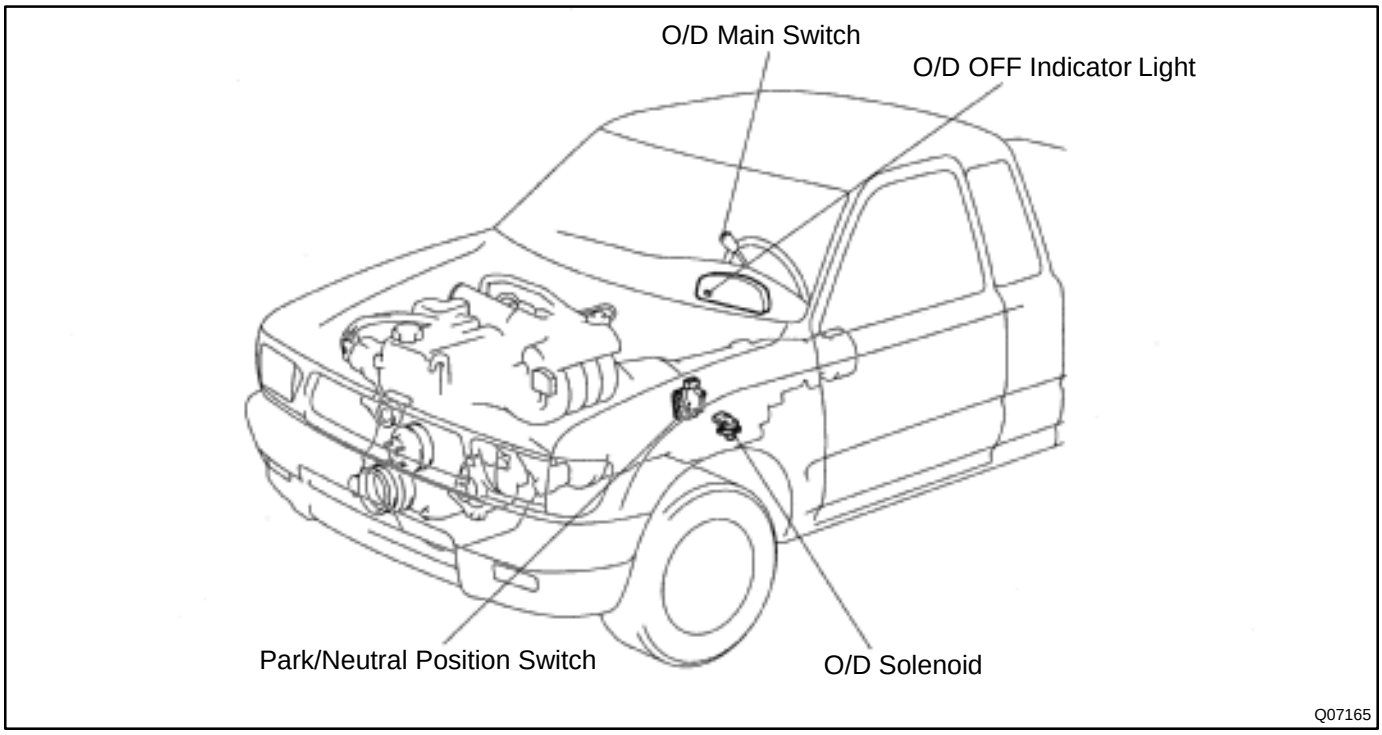

CIRCUIT

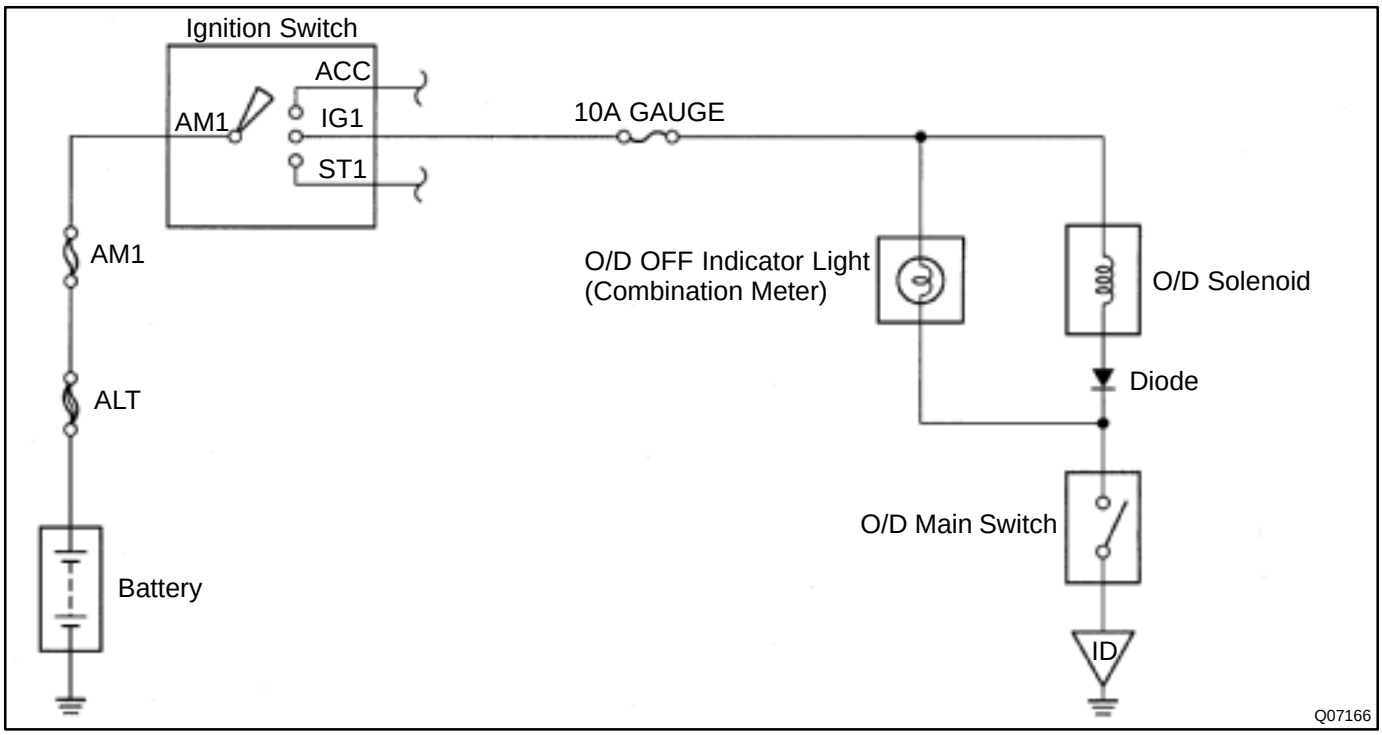

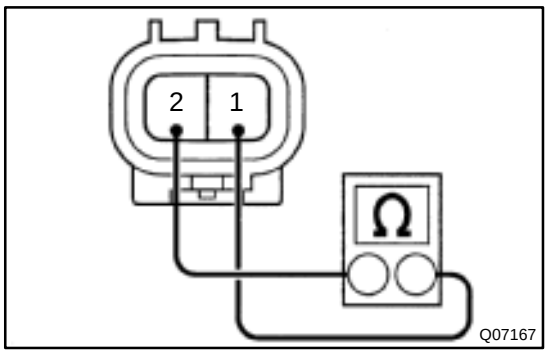

(a) Inspect the O/D solenoid.
(1) Using an ohmmeter, measure the resistance between terminals.
Resistance: 11 – 15 Ω

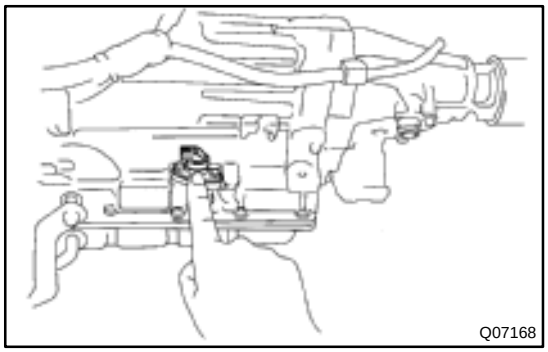

(2) Apply battery positive voltage to the solenoid. Check that the solenoid operation sound is heard.

If operation is not as specified, replace the solenoid.

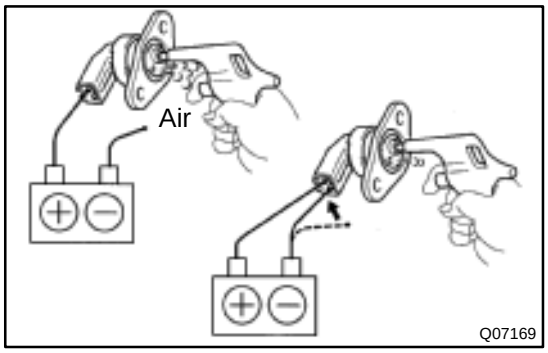

(b) Check the solenoid seals.
If there is foreign material in the solenoid valve, the fluid will not be controlled even with solenoid operation.
(1) Check that the solenoid valve opens when low–pressure compressed air is applied.
(2) When supplying battery positive voltage to the solenoid, check that the solenoid valve does not leak air.

If there is an air leak, replace the solenoid.

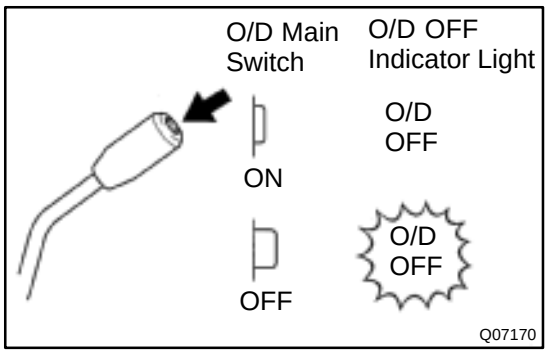

(c) Inspect the O/D OFF indicator light.
(1) Turn on the ignition switch.
(2) Check that the O/D OFF indicator light does not light, when the O/D main switch is turned ON.
(3) Check that the O/D OFF indicator lights, when the O/D main switch is turned OFF.

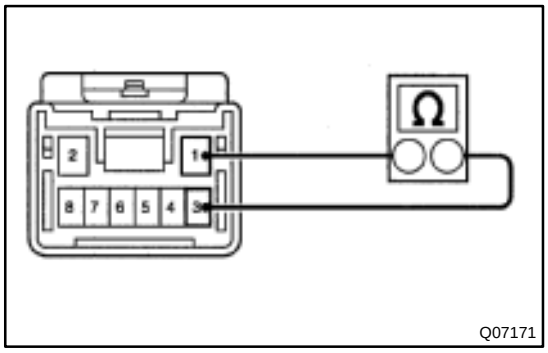

(d) Inspect the O/D main switch.
(1) Remove the lower finish panel.
(2) Using an ohmmeter, check the continuity of the terminals for each switch position.

Switch position	Tester connection	Specified value
ON	1 – 3	Continuity
OFF	1 – 3	No continuity

If continuity is not as specified, replace the switch.

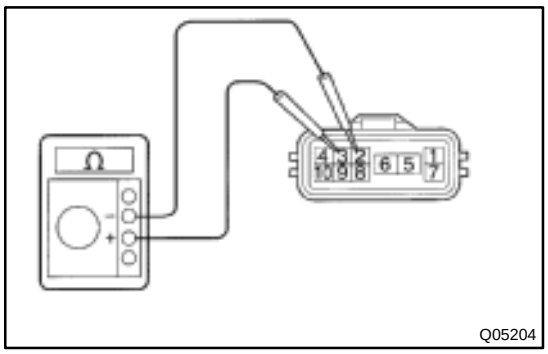

(e) Inspect the park/neutral position switch.
Inspect that there is continuity between each terminals.

Shift position	Terminal No. continuity	
P	6 – 5	4 – 7
R	4 – 8	–
N	6 – 5	4 – 10
D	4 – 9	–
2	4 – 2	–
L	4 – 3	–

If continuity is not as specified, replace the switch.

AT0FM–01

REMOVAL

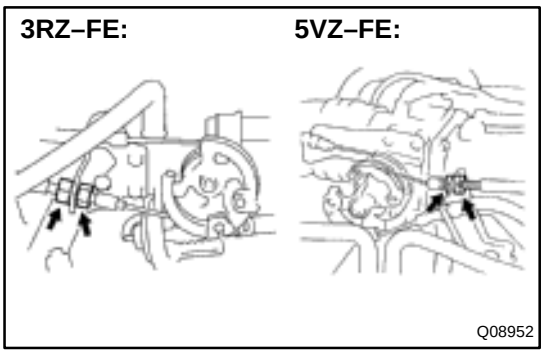

1. DISCONNECT THROTTLE CABLE

(a) Loosen the 2 nuts and disconnect the throttle cable.

(b) Disconnect the throttle cable from cable clamps in the engine compartment.

2. REMOVE ATF LEVEL GAUGE

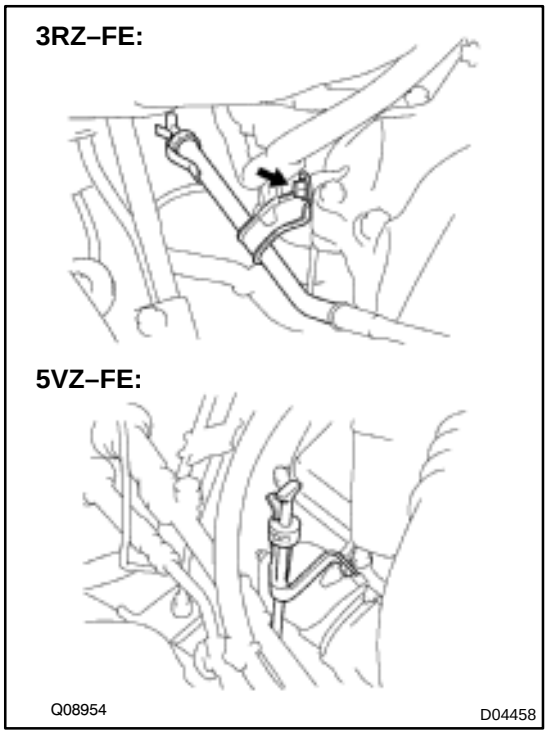

3. REMOVE OIL FILLER PIPE

Remove the bolt and oil filler pipe with the O–ring.

Torque: 12 N·m (120 kgf·cm, 9 ft·lbf)

HINT:

At the time of installation, please refer to the following item.

Replace the used O–ring with a new one.

4. REMOVE ENGINE UNDER COVER

Torque: 29 N·m (296 kgf·cm, 21 ft·lbf)

5. REMOVE PROPELLER SHAFT (See page PR–2)

6. REMOVE FRONT EXHAUST PIPE

(See page 3RZ–FE: EM–117, 5VZ–FE: EM–107)

7. DISCONNECT OIL COOLER PIPE

(a) Loosen the 2 oil cooler pipe unions.

Torque: 34 N·m (350 kgf·cm, 25 ft·lbf)

(b) Remove the 3 oil cooler clamp set bolts and disconnect the 2 oil cooler pipes.

Torque: 4.9 N·m (50 kgf·cm, 43 in.·lbf)

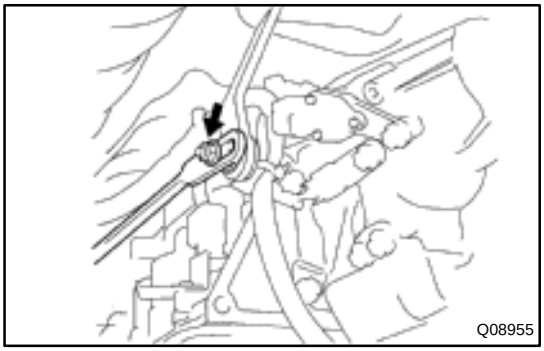

8. DISCONNECT SHIFT CONTROL ROD FROM SHIFT LEVER

Remove the nut and washer, and disconnect the shift control rod.

Torque: 13 N·m (130 kgf·cm, 10 ft·lbf)

9. DISCONNECT CONNECTOR FROM TRANSMISSION

(a) Disconnect the No.1 vehicle speed sensor connector (3RZ–FE only).

(b) Disconnect the No.2 vehicle speed sensor connector.

(c) Disconnect the solenoid wire connector.

(d) Disconnect the ATF temperature sensor connector.

(e) Disconnect the park/neutral position switch connector.

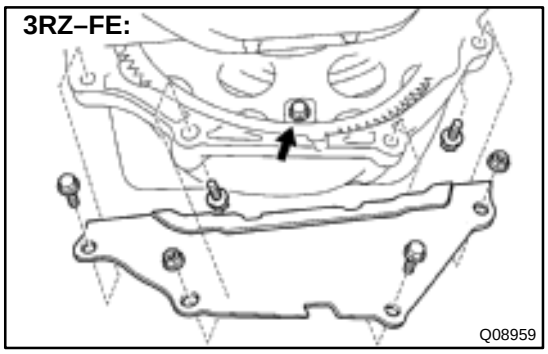

10. REMOVE REAR END PLATE AND TORQUE CONVERTER CLUTCH MOUNTING BOLT

(a) 3RZ–FE:
Remove the 2 nuts, 4 bolts and rear end plate.
Torque: 37 N·m (380 kgf·cm, 27 ft·lbf)

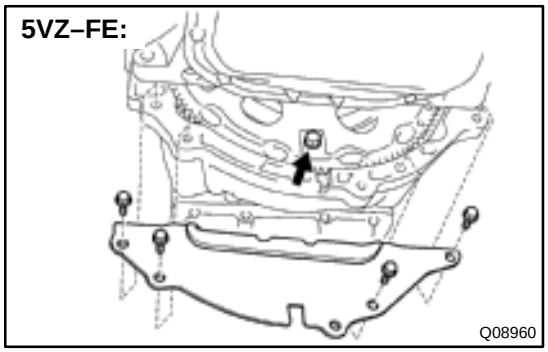

(b) 5VZ–FE:
Remove the 4 bolts and rear end plate.
Torque: 18 N·m (185 kgf·cm, 13 ft·lbf)

(c) Turn the crankshaft to gain access and remove the 6 bolts with holding the crankshaft pulley set bolt by a wrench.
Torque: 41 N·m (420 kgf·cm, 30 ft·lbf)

HINT:
At the time of installation, please refer to the following item.
First install green colored bolt and then 5 other bolts.

11. JACK UP TRANSMISSION SLIGHTLY

Securely support the transmission on a transmission jack. Lift the transmission slightly from the crossmember.

12. REMOVE CROSSMEMBER

(a) Disconnect the crossmember from the O–ring.

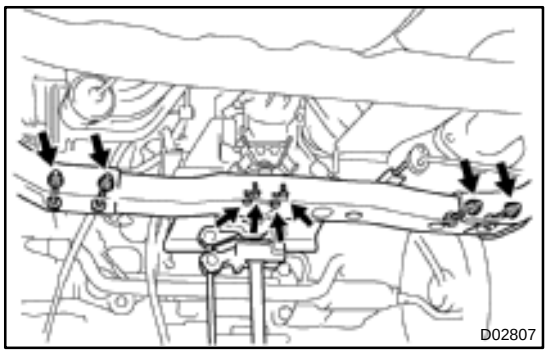

(b) Remove the 4 bolts on the rear mounting side from the engine rear mounting insulator.
Torque: 18.5 N·m (189 kgf·cm, 14 ft·lbf)

(c) Remove the 4 nuts, bolts, washers and crossmember.
Torque: 72 N·m (734 kgf·cm, 53 ft·lbf)

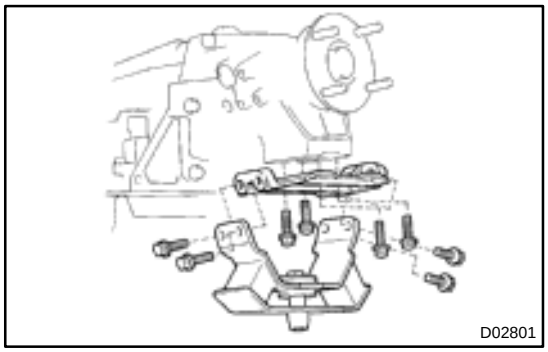

13. REMOVE ENGINE REAR MOUNTING INSULATOR AND ENGINE MOUNTING SPACER

(a) Remove the 4 bolts and engine rear mounting insulator from the engine mounting spacer.
Torque: 65 N·m (660 kgf·cm, 48 ft·lbf)

(b) Remove the 4 bolts and engine mounting spacer from the transmission.
Torque: 28.5 N·m (291 kgf·cm, 21 ft·lbf)

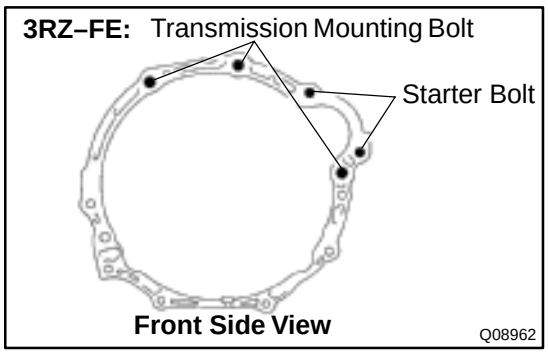

14. REMOVE STARTER

(a) Remove the nut and disconnect the starter wire and connector.

(b) Remove the 2 bolts and starter.
Torque: 39 N·m (400 kgf·cm, 29 ft·lbf)

15. REMOVE TRANSMISSION

(a) 3RZ–FE:
Remove the 3 bolts and transmission.
Torque: 71 N·m (730 kgf·cm, 53 ft·lbf)

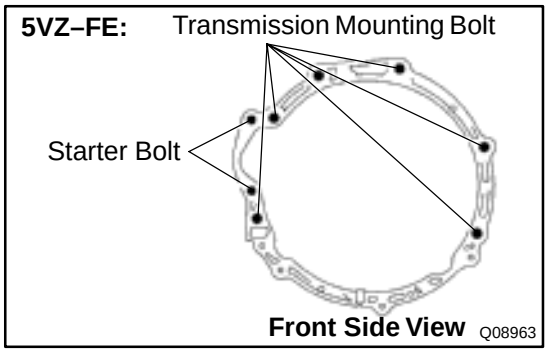

(b) 5VZ–FE:
Remove the 6 bolts and transmission.
Torque: 71 N·m (730 kgf·cm, 53 ft·lbf)

AT015–02

REMOVAL

1. REMOVE ATF LEVEL GAUGE

2. REMOVE ENGINE UNDER COVER

Torque: 29 N·m (296 kgf·cm, 21 ft·lbf)

3RZ–FE:

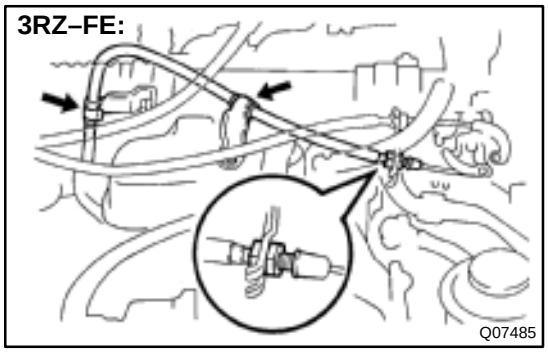

3. DISCONNECT THROTTLE CABLE

(a) Loosen the nut and disconnect the cable.

(b) Separate the throttle cable from the clamp.

5VZ–FE:

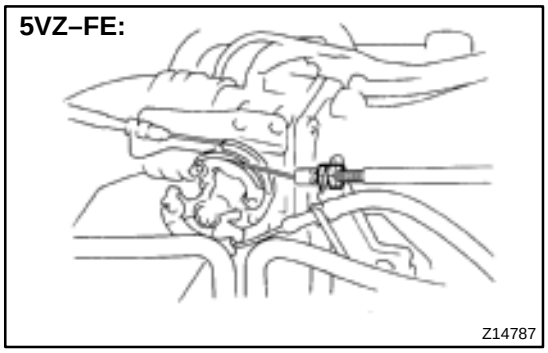

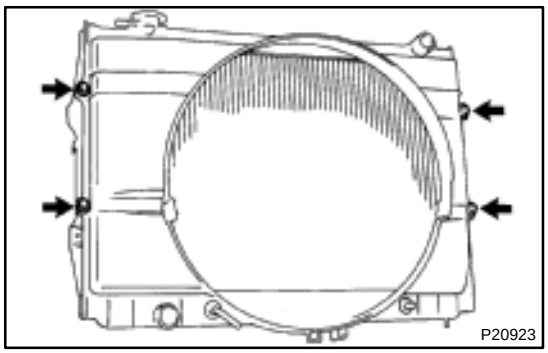

4. REMOVE NO.1 FAN SHROUD

Remove the 4 bolts and No.1 fan shroud.

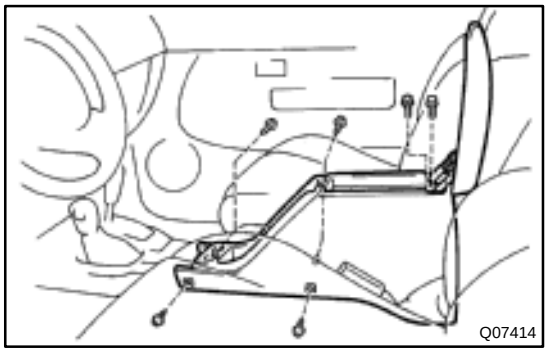

5. REMOVE TRANSMISSION SHIFT LEVER ASSEMBLY AND TRANSFER SHIFT LEVER

(a) Remove the 2 bolts, 4 screws and rear console box.

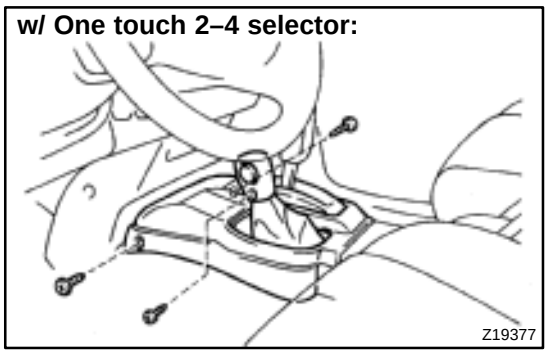

(b) w/ One touch 2–4 selector:
Remove the 3 screws and front console box with the transfer shift lever knob.

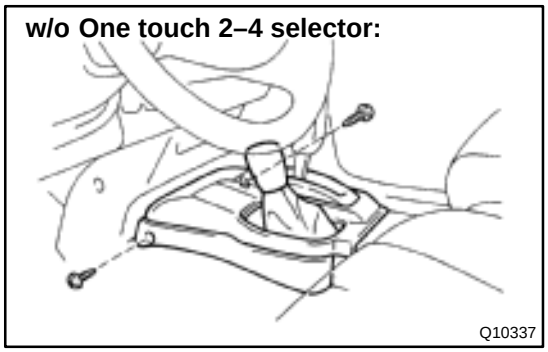

(c) w/o One touch 2–4 selector:
Remove the 2 screws and front console box with the transfer shift lever knob.

(d) Disconnect the connectors.

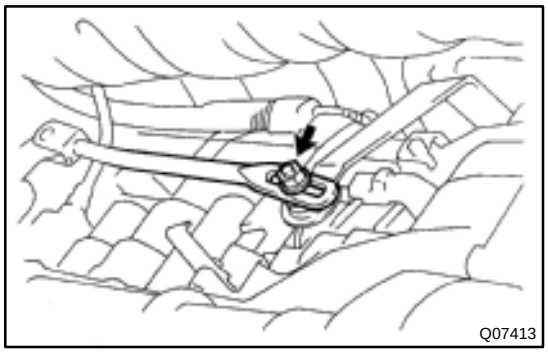

(e) Remove the nut and washer, and disconnect the shift control rod.

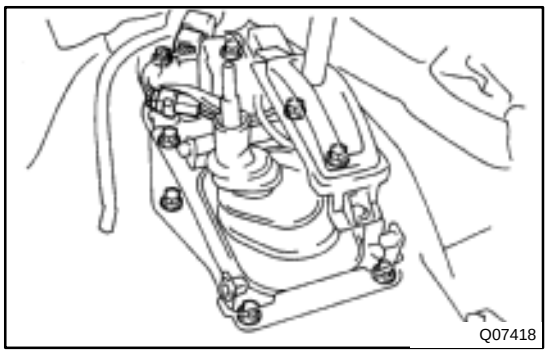

(f) Disconnect the connector and remove the 8 screws and transmission shift lever assembly.

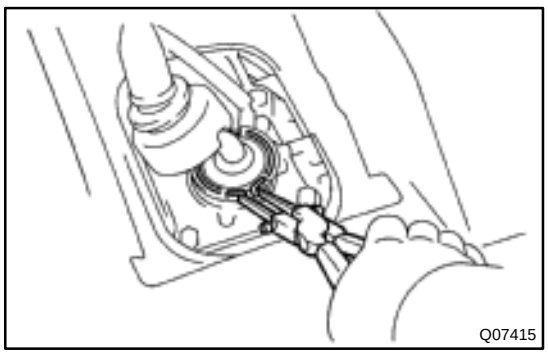

(g) Using snap ring pliers, remove the snap ring and pull out the shift lever from the transfer.

HINT:
At the time of installation, please refer to the following item.
Apply MP grease to the transfer shift lever.

6. REMOVE OIL FILLER PIPE

(a) 3RZ–FE:

Remove the 2 bolts and oil filler pipe with the O–ring.

HINT:

At the time of installation, please refer to the following item.

Replace the used O–ring with a new one.

(b) 5VZ–FE:

Remove the bolt and oil filler pipe with the O–ring.

HINT:

At the time of installation, please refer to the following item.

Replace the used O–ring with a new one.

7. REMOVE FRONT AND REAR PROPELLER SHAFT

(See page PR–11)

8. REMOVE EXHAUST PIPE

(3RZ–FE: See page EM–117)

(5VZ–FE: See page EM–107)

HINT:

At the time of installation, please refer to the following item.

Replace the used gaskets and nuts with new ones.

9. DISCONNECT CONNECTOR FROM TRANSMISSION

(a) Disconnect the No.1 and No.2 vehicle speed sensor connector.

(b) Disconnect the solenoid connector.

(c) Disconnect the transfer neutral position switch connector.

(d) Disconnect the transfer L4 position switch connector.

(e) Disconnect the 4WD position switch connector.

3RZ–FE:

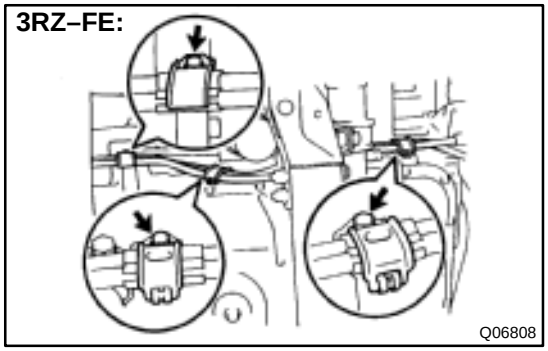

Q06808

5VZ–FE:

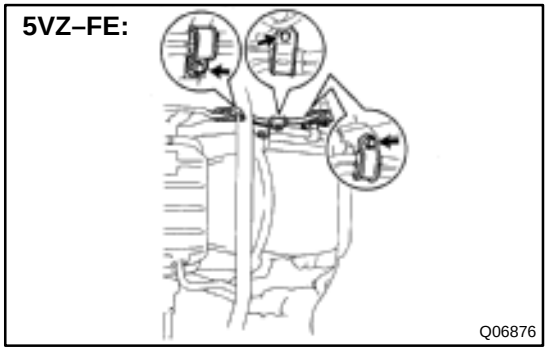

Q06876

10. DISCONNECT OIL COOLER PIPE

(a) Remove the 3 bolts and clamps.

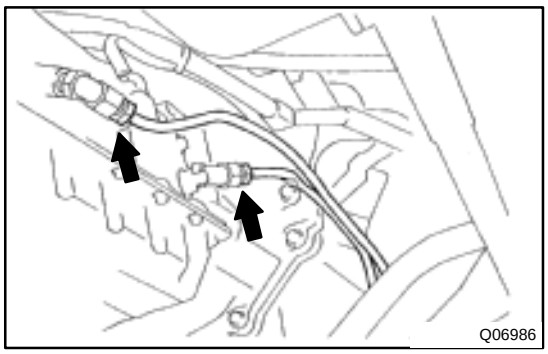

(b) Loosen the 2 union nuts and disconnect the 2 oil cooler pipes.
Torque: 34 N·m (350 kgf·cm, 25 ft·lbf)

11. DISCONNECT ATF TEMPERATURE SENSOR CONNECTOR

12. DISCONNECT PARK/NEUTRAL POSITION SWITCH CONNECTOR

3RZ–FE:

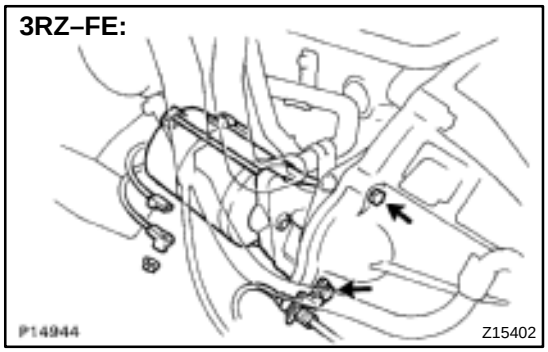

13. REMOVE STARTER

(a) Remove the nut and disconnect the connector and terminal.

(b) Remove the 2 bolts and starter.
Torque: 39 N·m (400 kgf·cm, 29 ft·lbf)

14. REMOVE 4 STABILIZER BAR BRACKET MOUNTING BOLTS (See page SA–128)

5VZ–FE:

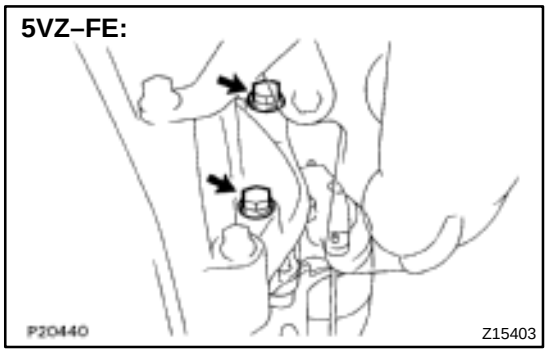

3RZ–FE:

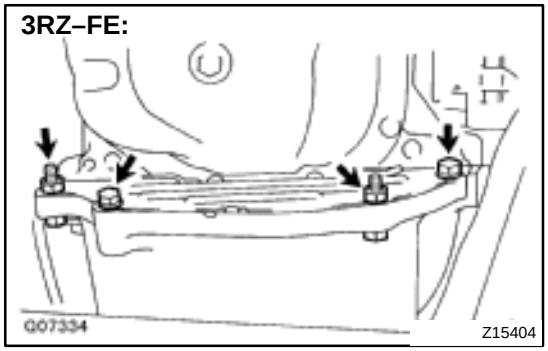

15. REMOVE TORQUE CONVERTER CLUTCH MOUNTING BOLT

(a) 3RZ–FE:
Remove the 2 nuts and bolts.
Remove the 2 bolts and flywheel housing under cover.
Torque: 37 N·m (380 kgf·cm, 27 ft·lbf)

5VZ–FE:

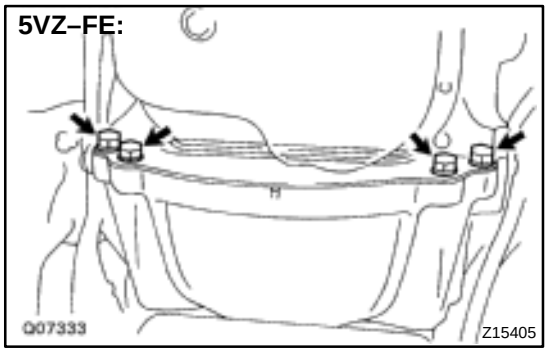

(b) 5VZ–FE:
Remove the 4 bolts and flywheel housing under cover.
Torque: 18 N·m (185 kgf·cm, 13 ft·lbf)

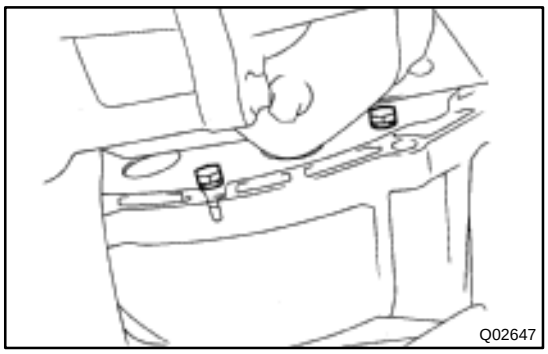
Q02647

(c) Turn the crankshaft to gain access to each bolt, remove the 6 bolts with holding the crankshaft pulley bolt with a wrench.
Torque: 41 N·m (420 kgf·cm, 30 ft·lbf)

HINT:
At the time of installation, please refer to the following item.
First install green colored bolt and then 5 other bolts.

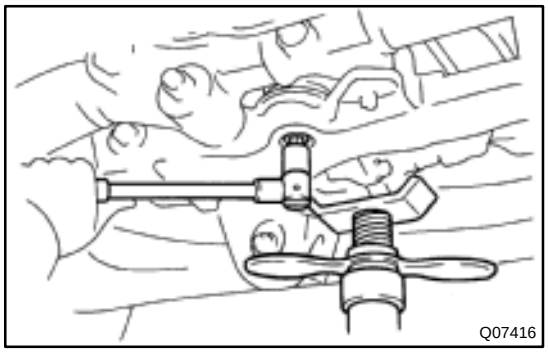
Q07416

16. REMOVE FRONT DIFFERENTIAL REAR MOUNTING CUSHION

(a) Using a hexagon wrench (12 mm), remove the nut.
Torque: 87 N·m (890 kgf·cm, 64 ft·lbf)

(b) Lift up the front differential with a support stand.

NOTICE:
Be careful not to touch the torque converter clutch housing and front differential companion flange.

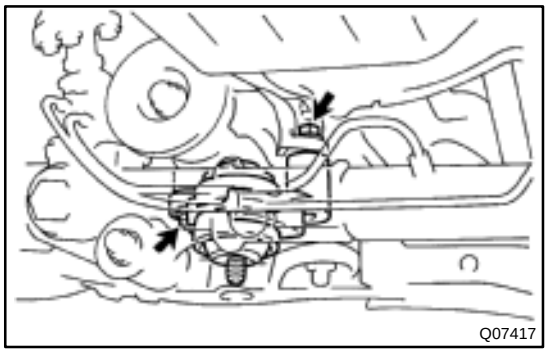
Q07417

(c) Remove the 2 rear mounting cushion mounting bolts.
Torque: 108 N·m (1,100 kgf·cm, 80 ft·lbf)

17. REMOVE CROSSMEMBER

(a) Support the transmission rear side with a support stand.

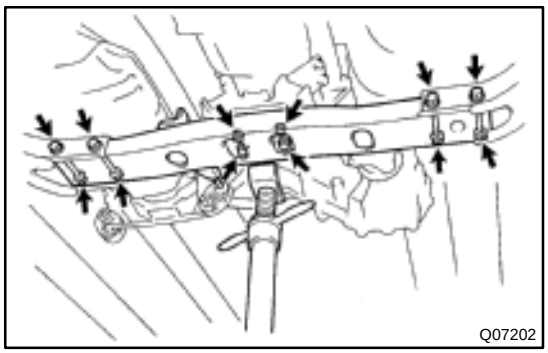
Q07202

(b) Remove the 4 engine rear mounting bolts.
Torque: 18.5 N·m (189 kgf·cm, 14 ft·lbf)

(c) Remove the 4 nuts, bolts and crossmember.
Torque: 72 N·m (734 kgf·cm, 53 ft·lbf)

(d) Support the transmission with a transmission jack.

18. REMOVE TRANSMISSION

(a) Lower the transmission rear side.

(b) Separate the wire harness from the transmission.

3RZ–FE:

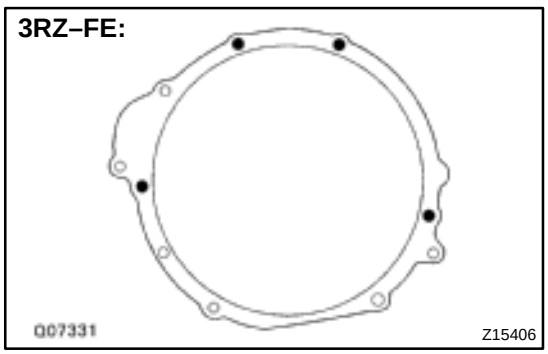
Q07331 Z15406

(c) 3RZ–FE:
Remove the 4 bolts and transmission.
Torque: 71 N·m (730 kgf·cm, 53 ft·lbf)

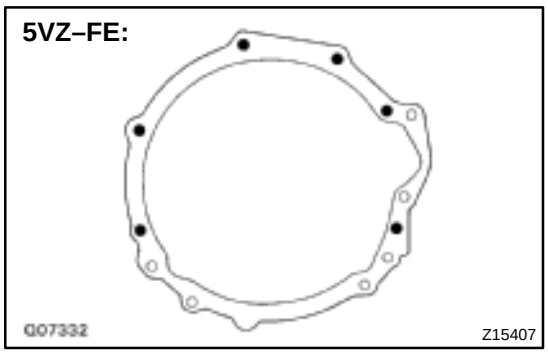

(d) 5VZ–FE:
Remove the 6 bolts and transmission.
Torque: 71 N·m (730 kgf·cm, 53 ft·lbf)

AUTOMATIC TRANSMISSION UNIT (A340E)

AT07F–02

COMPONENTS

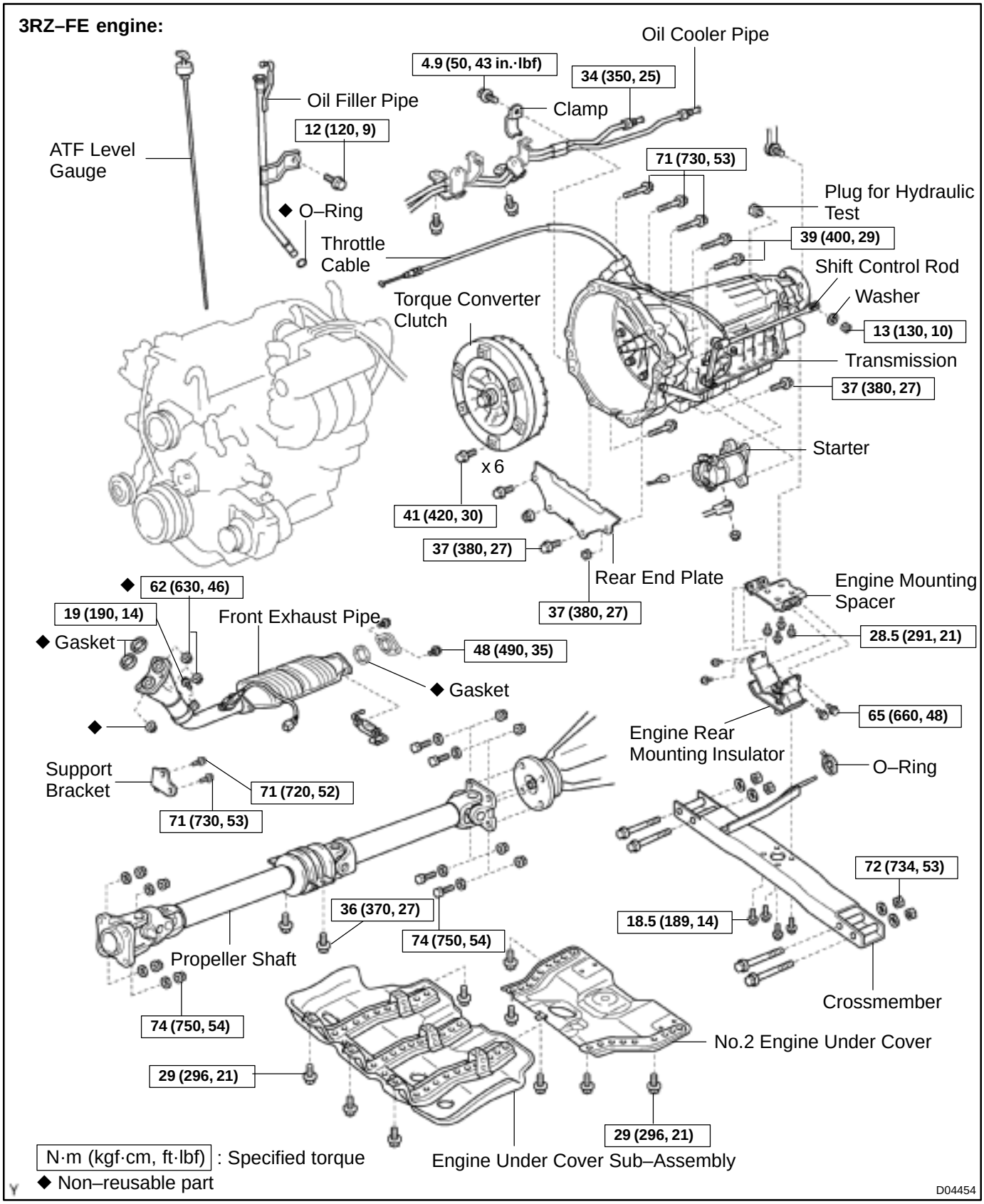

5VZ–FE engine:

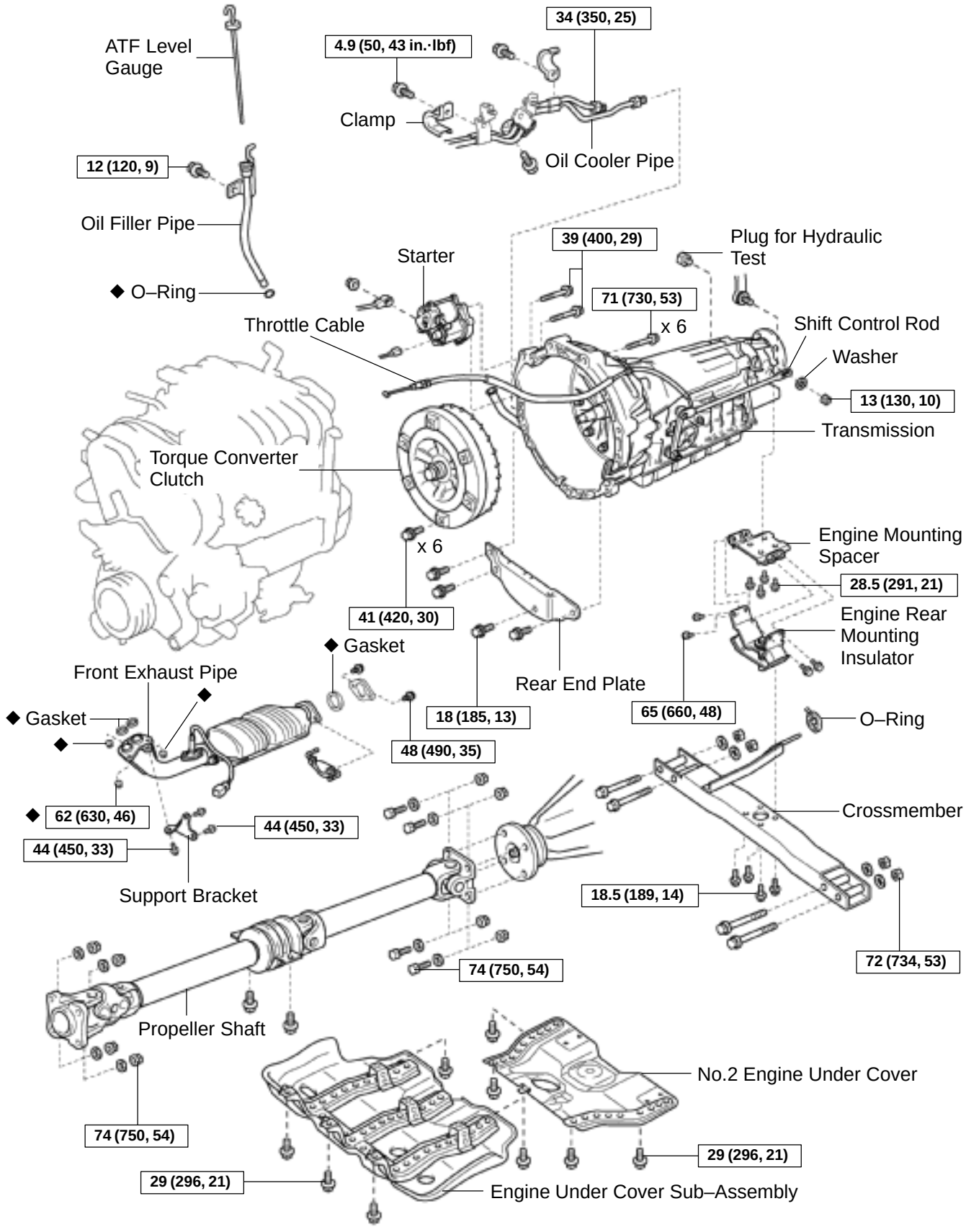

N·m (kgf·cm, ft·lbf) : Specified torque
◆ Non–reusable part

D04455

AUTOMATIC TRANSMISSION UNIT (A340F)

AT014–02

COMPONENTS

3RZ–FE engine:

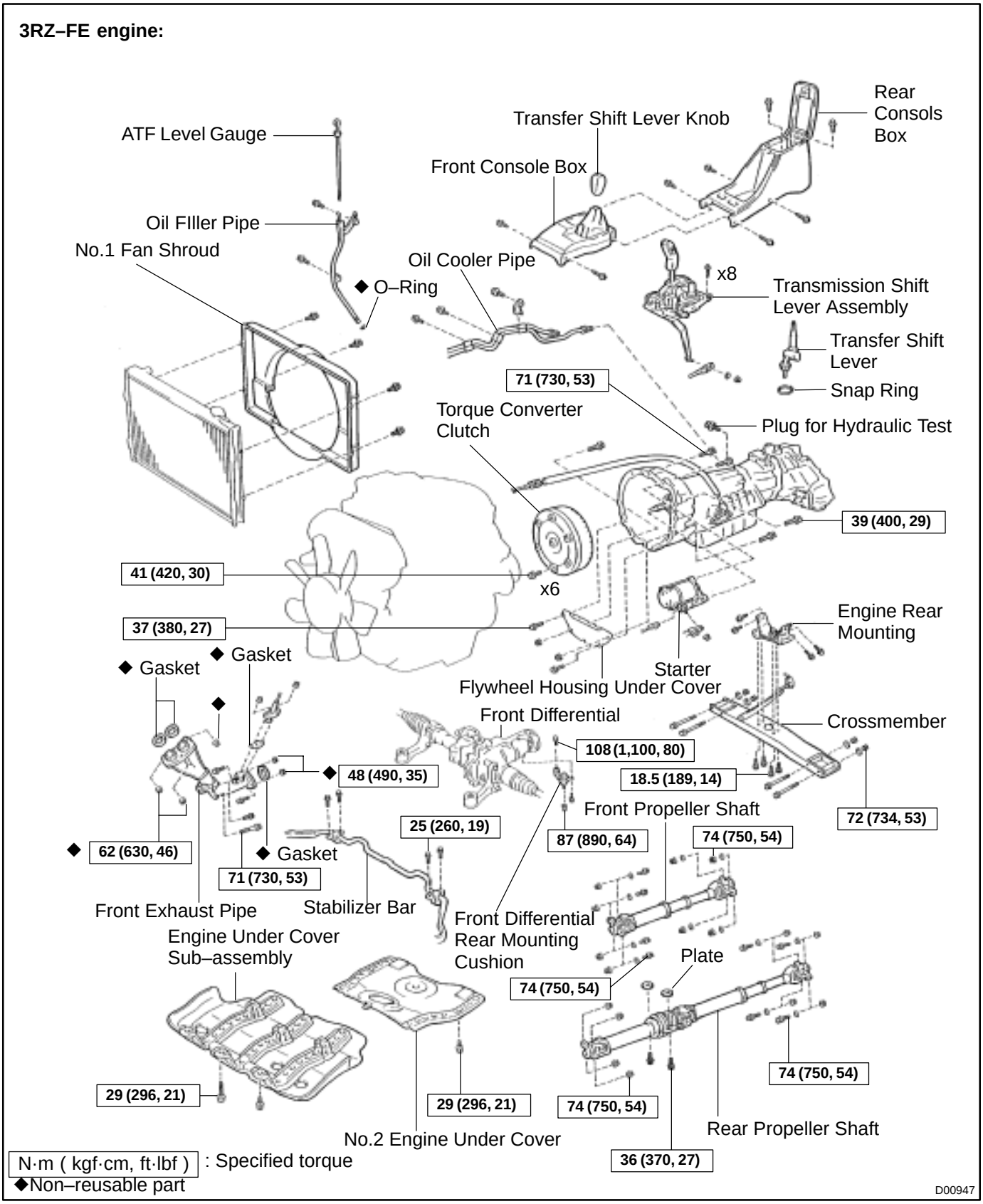

N·m (kgf·cm, ft·lbf) : Specified torque
◆Non–reusable part

D00947

5VZ–FE engine:

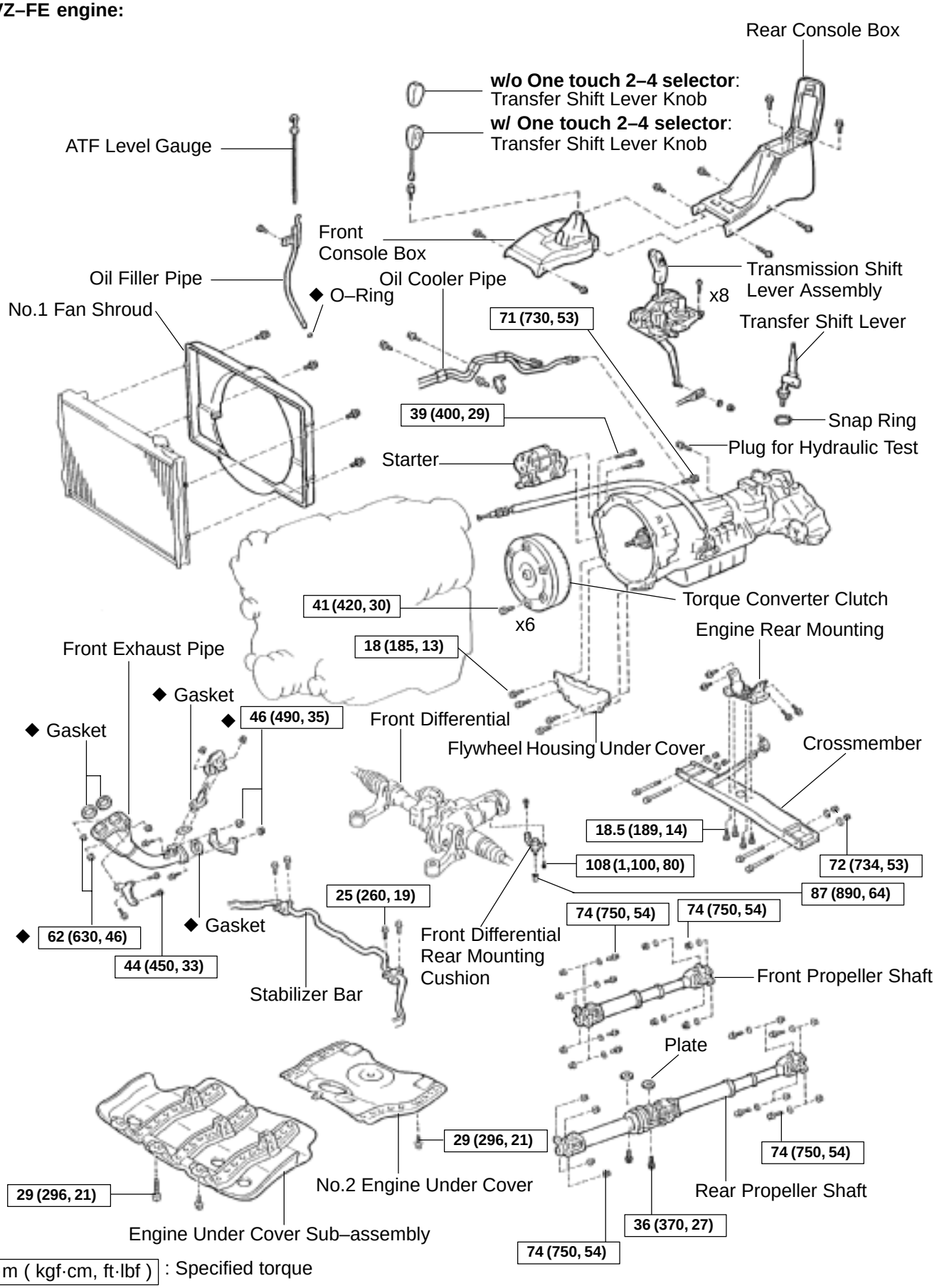

N·m (kgf·cm, ft·lbf) : Specified torque
◆ Non–reusable part

D00948

ATF TEMPERATURE SENSOR

AT00T–02

ON–VEHICLE INSPECTION

1. DISCONNECT ATF TEMPERATURE SENSOR CONNECTOR

2. DISCONNECT OIL COOLER PIPE

(a) Remove the 3 bolts and clamps.

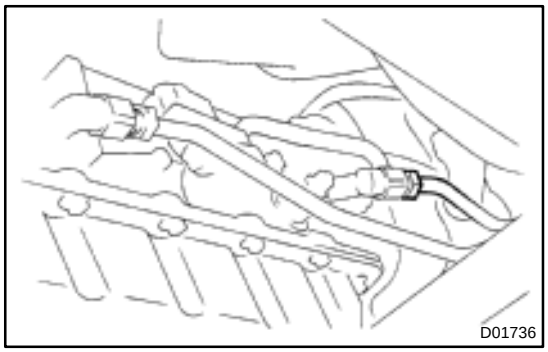

(b) Disconnect the oil cooler pipe.

3. REMOVE OIL COOLER ELBOW

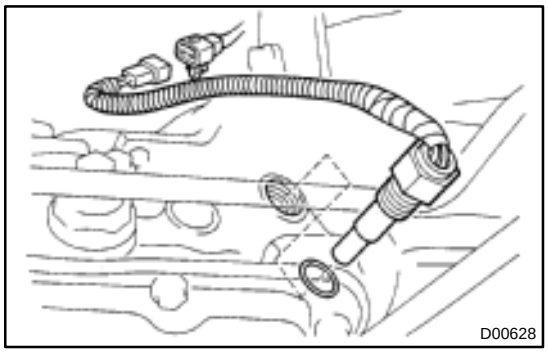

4. REMOVE ATF TEMPERATURE SENSOR

(a) Remove the ATF temperature sensor.

(b) Remove the O–ring from the ATF temperature sensor.

5. INSTALL ATF TEMPERATURE SENSOR

(a) Coat a new O–ring with ATF and install it to the ATF temperature sensor.

(b) Install the ATF temperature sensor.
Torque: 15 N·m (155 kgf·cm, 11 ft·lbf)

6. INSTALL OIL COOLER ELBOW

7. CONNECT OIL COOLER PIPE

(a) Connect the oil cooler pipe
Torque: 34 N·m (350 kgf·cm, 25 ft·lbf)

(b) Install the 3 clamps and bolts.

8. CONNECT ATF TEMPERATURE SENSOR

NOTICE:

Be careful not to twist the wire harness.

EXTENSION HOUSING OIL SEAL (A340E)

AT03H–03

ON–VEHICLE REPAIR

1. REMOVE DRAIN PLUG AND DRAIN ATF

2. REMOVE PROPELLER SHAFT (See page PR–3)

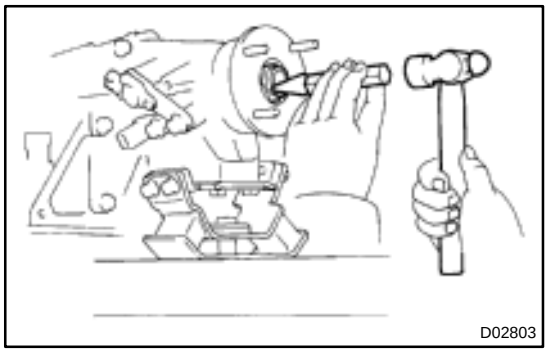

3. REMOVE TRANSMISSION OUTPUT FLANGE

(a) Using a chisel and hammer, loosen the staked part of the nut.

HINT:

Shift the shift lever to the P position.

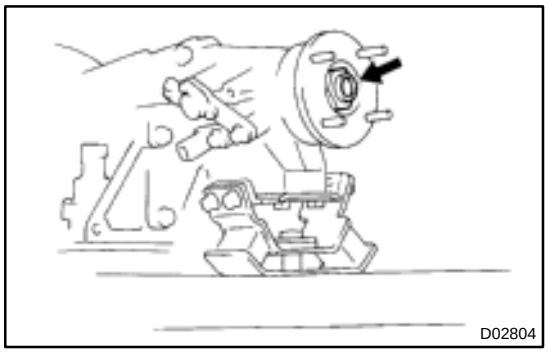

(b) Remove the nut.

(c) Tap the output flange with a plastic hammer to remove it and 2 washers.

(d) Using a screwdriver, remove the oil seal from the output flange.

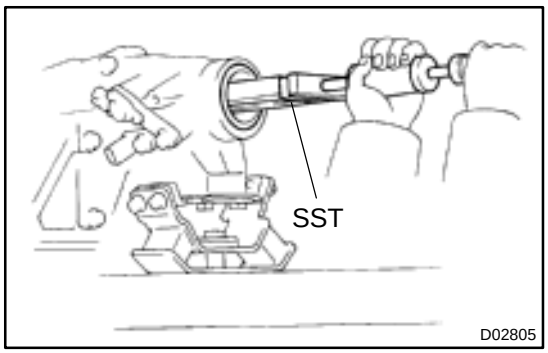

4. REMOVE EXTENSION HOUSING REAR OIL SEAL

Using SST, remove the oil seal.

SST 09308–00010

5. INSTALL EXTENSION HOUSING REAR OIL SEAL

(a) Coat the lip of a new oil seal with MP grease.

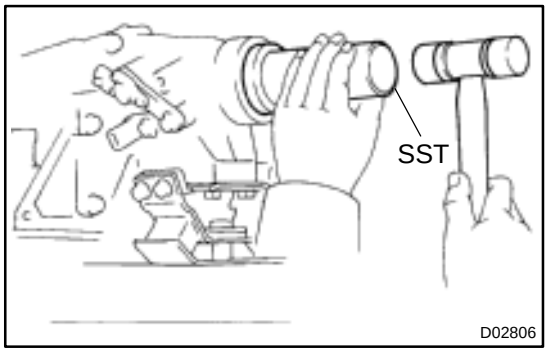

(b) Using SST and a plastic hammer, drive in the oil seal with the lip facing downward.

SST 09309–37010

Oil seal depth from flat end: 0 – 0.3 mm (0 – 0.012 in.)

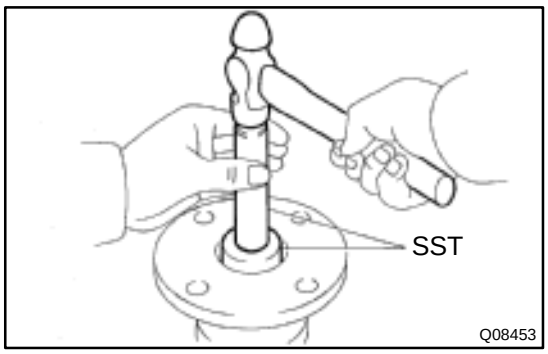

6. INSTALL TRANSMISSION OUTPUT FLANGE

(a) Using SST and a hammer, drive in a new oil seal.
SST 09950–60010 (09951–00350), 09950–70010 (09951–07100)

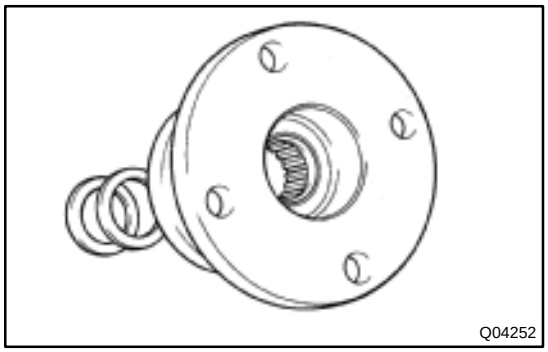

(b) Install the output flange and 2 washers.

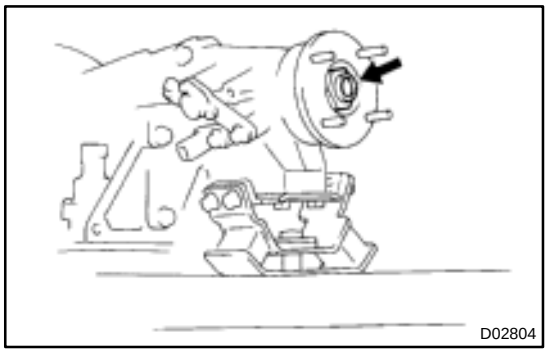

(c) Install and torque a new nut.
Torque: 123 N·m (1,250 kgf·cm, 90 ft·lbf)

HINT:
Shift the shift lever to the P position.

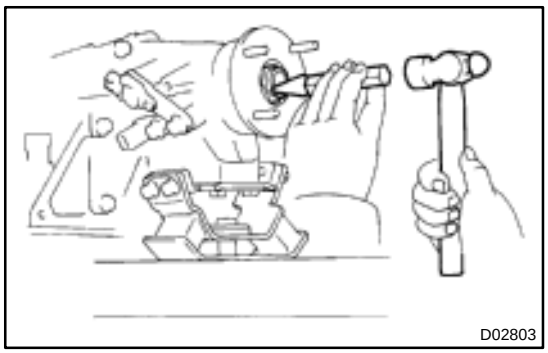

(d) Using a chisel and hammer, stake the nut.

7. INSTALL PROPELLER SHAFT (See page PR–8)

8. INSTALL DRAIN PLUG AND NEW GASKET
Torque: 20 N·m (205 kgf·cm, 15 ft·lbf)

9. FILL ATF AND CHECK FLUID LEVEL
(See page DI–342)

AT010–02

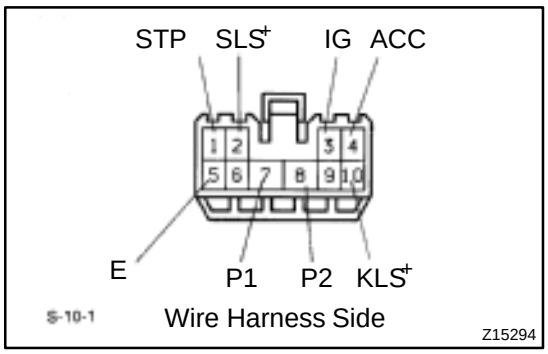

INSPECTION

1. Column shift:

INSPECT SHIFT LOCK CONTROL ECU

Using a voltmeter, measure the voltage at each terminal.

HINT:

Do not disconnect the ECU connector.

Terminal (Symbols)	Measuring Condition	Voltage (V)
4 (ACC) – 5 (E)	IG SW ACC	10 – 14
3 (IG) – 5 (E)	IG SW ON	10 – 14
1 (STP) – 5 (E)	Depressing brake pedal	10 – 14
10 (KLS^+) – 5 (E)	1. IG SW ACC and P position 2. IG SW ACC and except P position 3. (After–approx. 1 second)	0 10 – 14 6 – 9
2 (SLS^+) – 5 (E)	1. IG SW ON and P position 2. Depress brake pedal 3. Except P position	0 8.5 – 13.5 0
7 (P1) – 5 (E)	1. IG SW ON, P position and depress brake pedal 2. Shift except P position under condition above	0 9 – 13.5
8 (P2) – 5 (E)	1. IG SW ACC and P position 2. Shift except P position under condition above	9 – 13.5 0

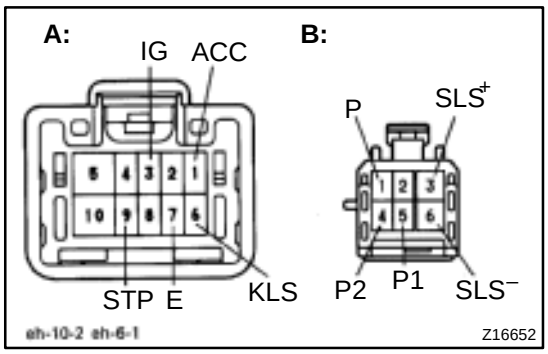

2. Floor shift:
INSPECT SHIFT LOCK CONTROL ECU

Using a voltmeter, measure the voltage at each terminal.

HINT:

Do not disconnect the ECU connector.

Terminal (Symbols)	Measuring Condition	Voltage (V)
A1 (ACC) – A7 (E)	Ignition switch ACC	10 – 14
A3 (IG) – A7 (E)	Ignition switch ON	10 – 14
A9 (STP) – A7 (E)	Depress brake pedal	10 – 14
A6 (KLS) – A7 (E)	1. Ignition switch ACC and P position	0
	2. R, N, D, 2, L position	7.5 – 11
	3. R, N, D, 2, L position (After–approx. 1 second)	6 – 9.5
B3 (SLS^+) – B6 (SLS^-)	1. Ignition switch ON and P position	0
	2. Depress brake pedal	8 – 13.5
	3. Depress brake pedal (After–approx. 20 seconds)	6 – 8.5
	4. R, N, D, 2, L position	0
B5 (P1) – B1 (P)	1. Ignition switch ON, P position and depress brake pedal	0
	2. R, N, D, 2, L position	9 – 13.5
B4 (P2) – B1 (P)	1. Ignition switch ACC and P position	9 – 13.5
	2. R, N, D, 2, L position	0

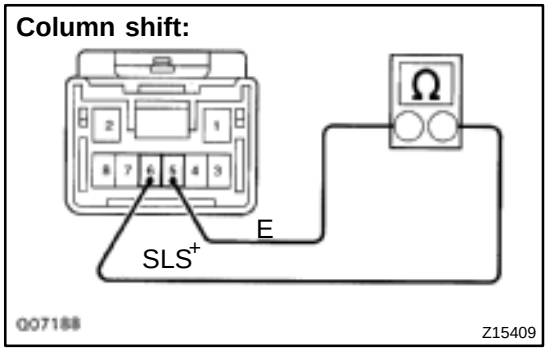

3. INSPECT SHIFT LOCK SOLENOID

(a) Disconnect the solenoid connector.

(b) Using an ohmmeter, measure the resistance at each terminal.

Standard resistance: 20 – 28 Ω

If resistance value is not as specified, replace the solenoid.

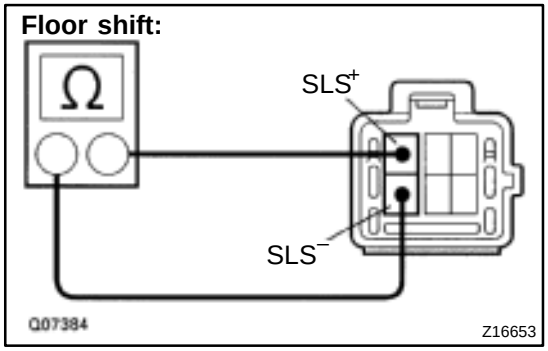

Column shift:

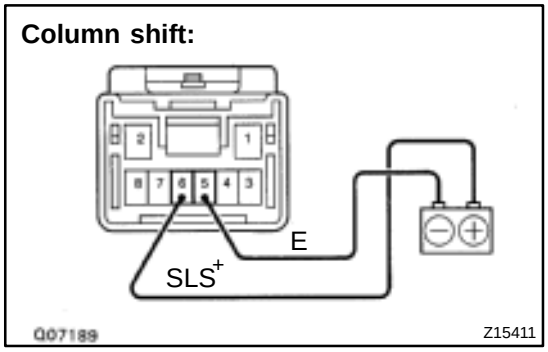

(c) Apply battery positive voltage at each terminal. At this time, check that the solenoid operates.

If the solenoid does not operate, replace the solenoid.

Floor shift:

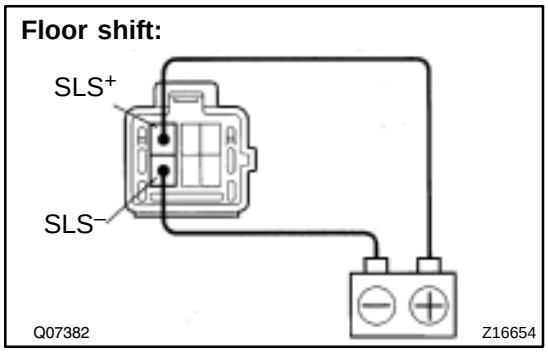

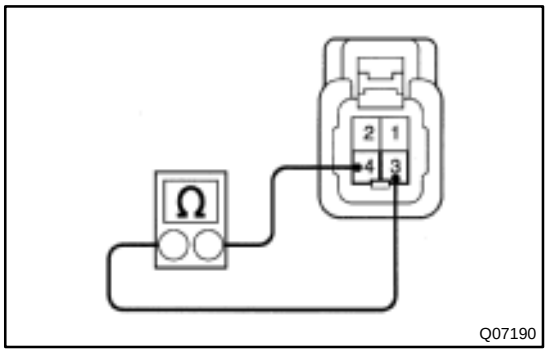

4. INSPECT KEY INTERLOCK SOLENOID

(a) Disconnect the solenoid connector.

(b) Using an ohmmeter, measure the resistance between terminals 3 and 4.

Standard resistance: 12 – 17 Ω

If resistance value is not as specified, replace the solenoid.

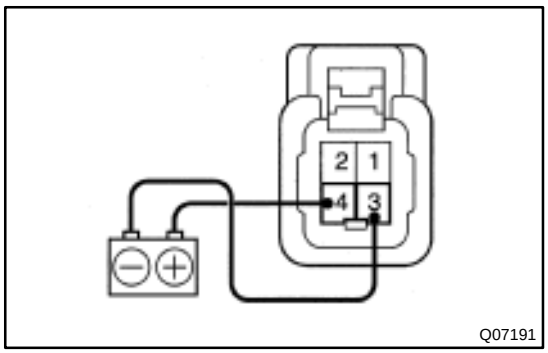

(c) Touch the solenoid with your finger and check that solenoid operation can be felt when battery positive voltage is applied intermittently to the terminals 1 and 2.

If the solenoid does not operate, replace the solenoid.

Column shift:

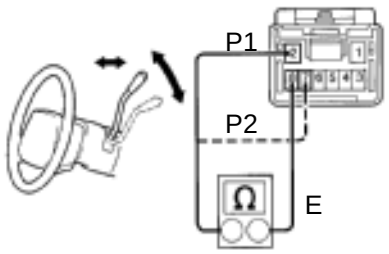

Floor shift:

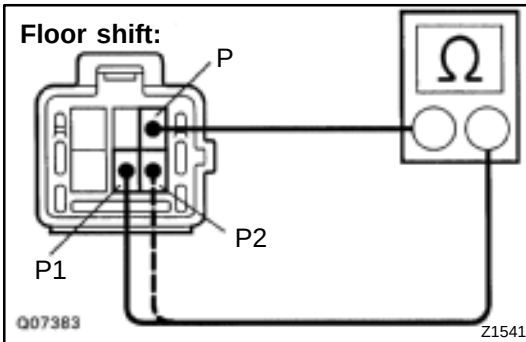

5. INSPECT SHIFT LOCK CONTROL SWITCH

Inspect that there is continuity between each terminal.

Shift position	Tester connection	Specified value
*1 P position	2 (P1) – 1 (P) or 8 (E)	Continuity
*2 P position	2 (P1) – 1 (P) or 8 (E) 7 (P2) – 1 (P) or 8 (E)	Continuity
R, N, D, 2, L position	7 (P2) – 1 (P) or 8 (E)	Continuity

*1: Floor shift release button is not pushed or column shift lever is not pulled.

*2: Floor shift release button is pushed or column shift lever is not pulled toward you.

If the continuity is not as specified, replace the switch.

AT016–03

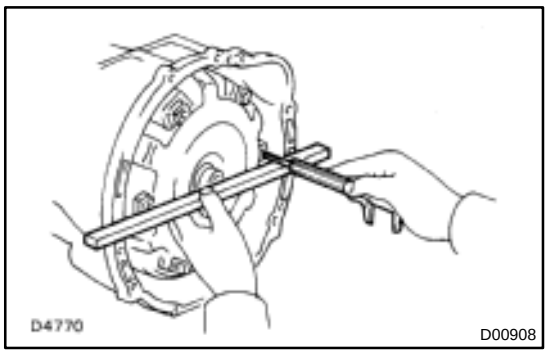

INSTALLATION

1. CHECK TORQUE CONVERTER CLUTCH INSTALLATION

Using calipers and a straight edge, measure the distance from the installed surface of the transmission housing to the installed surface of the torque converter clutch.

Correct distance:

3RZ–FE: More than 31.75 mm (1.2500 in.)

5VZ–FE: More than 17.95 mm (0.7067 in.)

2. INSTALL TRANSMISSION

Installation is in the reverse order of removal (See page AT–26).

HINT:

- After installation, adjust the shift lever position and throttle cable (See page DI–342).
- Fill ATF and check fluid level (See page DI–342).

AT007–05

OPERATION

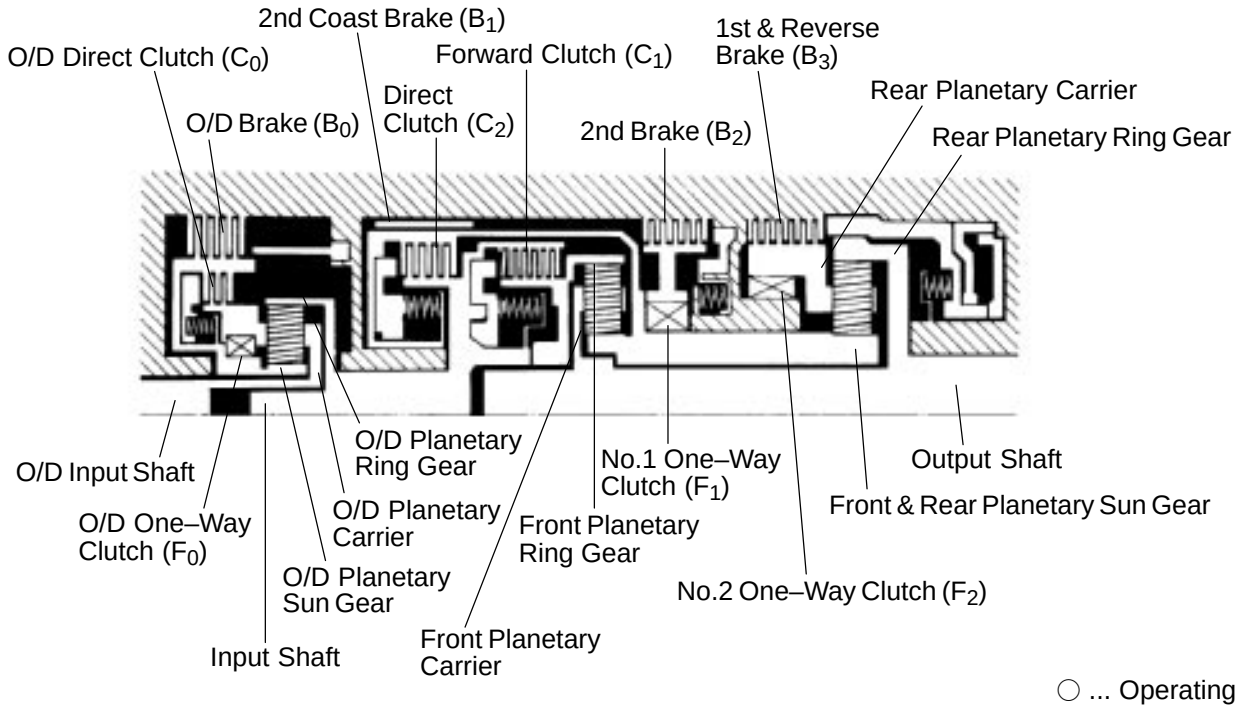

AT2157

○ ... Operating

Shift lever position	Gear position	C_0	C_1	C_2	B_0	B_1	B_2	B_3	F_0	F_1	F_2
P	Parking	○									
R	Reverse	○		○				○	○		
N	Neutral	○									
D	1st	○	○						○		○
	2nd	○	○				○		○	○	
	3rd	○	○	○			○		○		
	O/D		○	○	○		○				
2	1st	○	○						○		○
	2nd	○	○			○	○		○	○	
	*1 3rd	○	○	○			○		○		
L	1st	○	○					○	○		○
	*2 2nd	○	○			○	○		○	○	

*1: Down–shift only in the 2 position and 3rd gear — no up–shift.
*2: Down–shift only in the L position and 2nd gear — no up–shift.

V07130

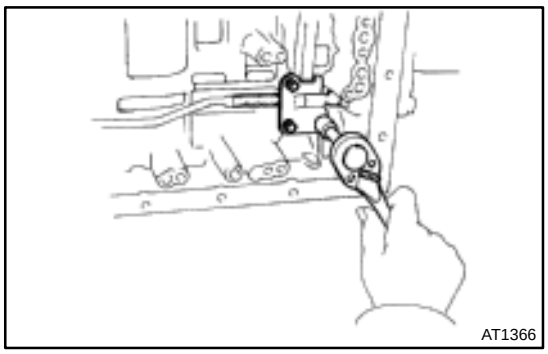

PARKING LOCK PAWL

AT00X–02

ON–VEHICLE REPAIR

1. **REMOVE VALVE BODY (See page AT–10)**
2. **REMOVE PARKING LOCK PAWL BRACKET**

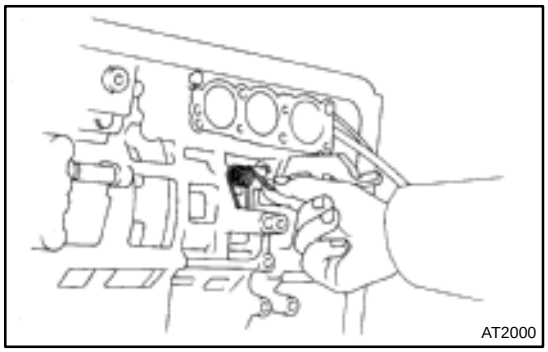

3. **REMOVE SPRING FROM PARKING LOCK PAWL SHAFT**

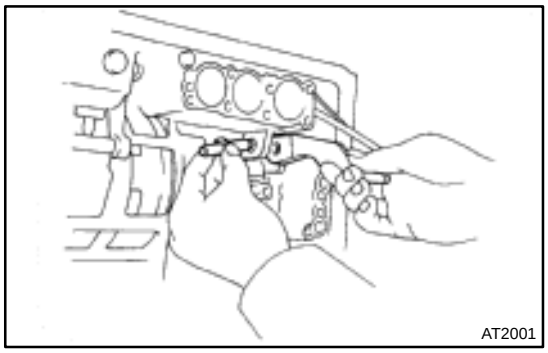

4. **REMOVE PARKING LOCK PAWL AND SHAFT**
5. **INSTALL PARKING LOCK PAWL AND SHAFT**

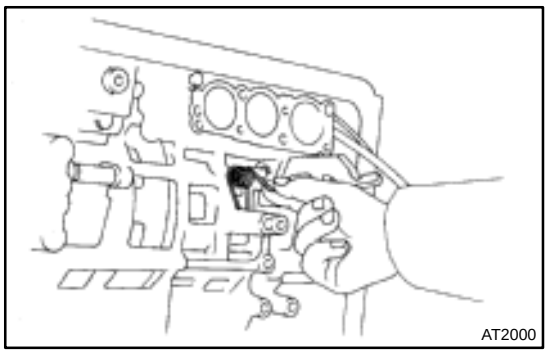

6. **INSTALL SPRING TO PARKING LOCK PAWL SHAFT**

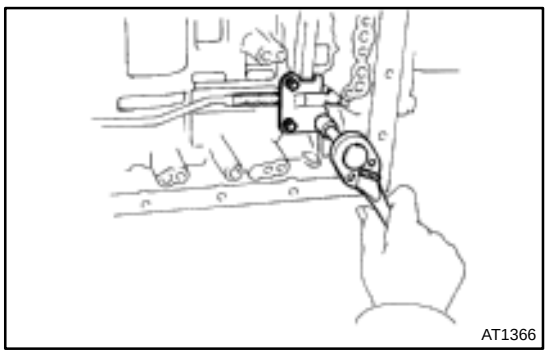

7. **INSTALL PARKING LOCK PAWL BRACKET**
   Torque: 7.4 N·m (75 kgf·cm, 65 in.·lbf)

HINT:

- Push the lock rod fully forward.
- Check that the parking lock pawl operates smoothly.

8. **INSTALL VALVE BODY (See page AT–10)**

PARK/NEUTRAL POSITION (PNP) SWITCH

AT00W–02

ON–VEHICLE REPAIR

1. DISCONNECT 2 OIL COOLER PIPES
(See page A340E: AT–26, A340F: AT–32)

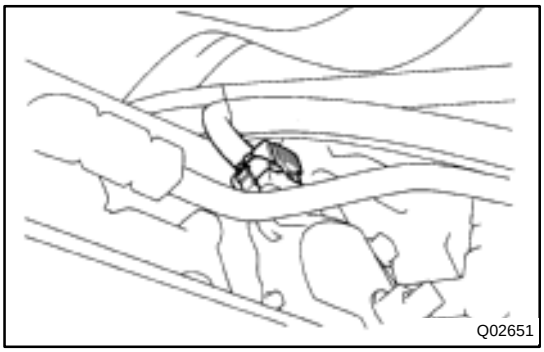
Q02651

2. DISCONNECT PARK/NEUTRAL POSITION SWITCH CONNECTOR

3. REMOVE PARK/NEUTRAL POSITION SWITCH

(a) Pry off the lock washer and remove the nut.

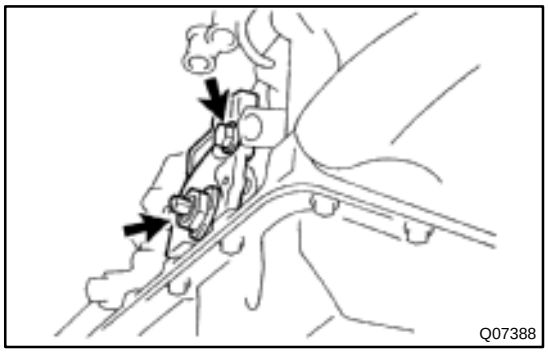
Q07388

(b) Remove the bolt and pull out the park/neutral position switch.

4. INSTALL AND ADJUST PARK/NEUTRAL POSITION SWITCH (See page DI–342)
Torque:
Nut: 6.9 N·m (70 kgf·cm, 61 in.·lbf)
Bolt: 13 N·m (130 kgf·cm, 9 ft·lbf)

5. CONNECT PARK/NEUTRAL POSITION SWITCH CONNECTOR

6. CONNECT 2 OIL COOLER PIPES
(See page A340E: AT–26, A340F: AT–32)

AUTOMATIC TRANSMISSION SYSTEM

AT00R–01

PRECAUTION

If the vehicle is equipped with a mobile communication system, refer to the precautions in the IN section.

SENSOR ROTOR (A340E)

AT07E–02

ON–VEHICLE REPAIR

1. REMOVE PROPELLER SHAFT (See page PR–3)

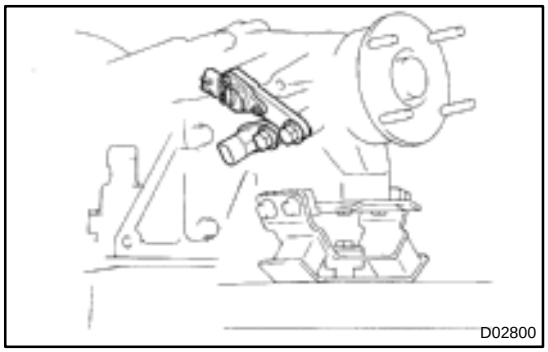

2. REMOVE NO.1 AND NO.2 VEHICLE SPEED SENSORS (See page AT–7)

3. JACK UP TRANSMISSION SLIGHTLY

Securely support the transmission on a transmission jack. Lift the transmission slightly from the crossmember.

4. REMOVE CROSSMEMBER

(a) Disconnect the crossmember from the O–ring.

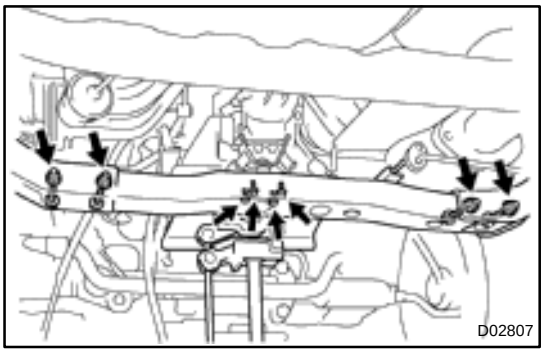

(b) Remove the 4 bolts on the rear mounting side from the engine rear mounting insulator.

(c) Remove the 4 nuts, bolts, washers and crossmember.

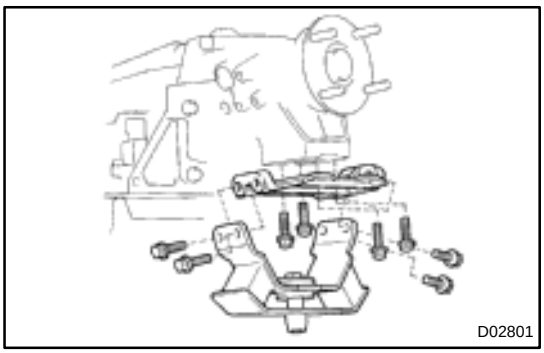

5. REMOVE ENGINE REAR MOUNTING INSULATOR AND ENGINE MOUNTING SPACER

(a) Remove the 4 bolts and engine rear mounting insulator from the engine mounting spacer.

(b) Remove the 4 bolts and engine mounting spacer from the transmission.

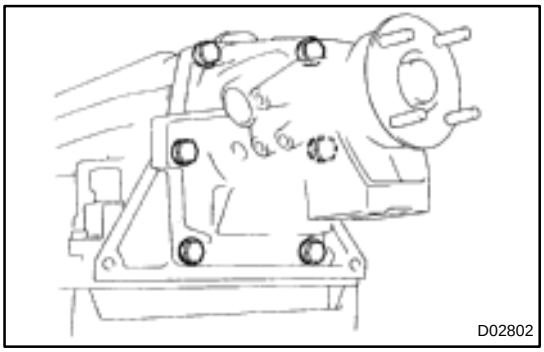

6. REMOVE EXTENSION HOUSING AND GASKET

Remove the 6 bolts, gasket and extension housing.

If necessary, tap the extension housing with a plastic hammer or a block of wood to loosen it.

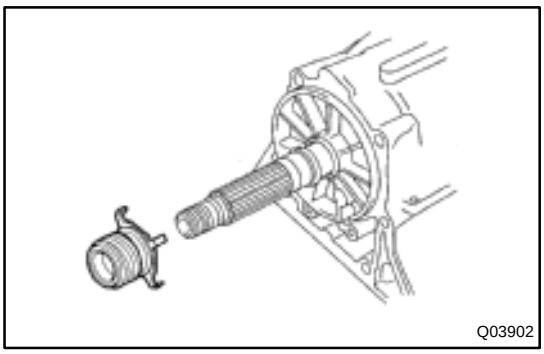
Q03902

7. REMOVE SPEEDOMETER DRIVE GEAR AND SENSOR ROTOR

Remove the speedometer drive gear and sensor rotor from the output shaft.

8. INSTALL SPEEDOMETER DRIVE GEAR AND SENSOR ROTOR

Install the speedometer drive gear and sensor rotor to the output shaft.

9. INSTALL EXTENSION HOUSING AND GASKET

(a) Apply sealant or equivalent to the bolt threads.
Sealant:
Part No. 08833 – 00080, THREE BOND 1344, LOCTITE 242 or equivalent

(b) Install the extension housing with a new gasket to the case.

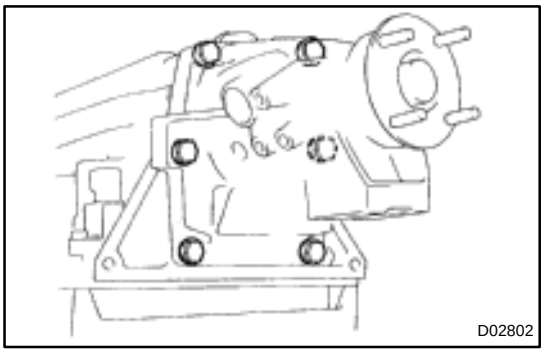
D02802

(c) Install and torque the 6 bolts.
Torque: 36 N·m (370 kgf·cm, 27 ft·lbf)

HINT:
The 2 lower bolts are shorter.

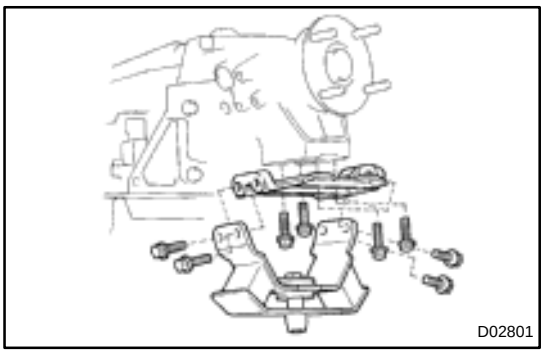
D02801

10. INSTALL ENGINE REAR MOUNTING INSULATOR AND ENGINE MOUNTING SPACER

(a) Install the 4 bolts and engine mounting spacer to the transmission.
Torque: 28.5 N·m (291 kgf·cm, 21 ft·lbf)

(b) Install the 4 bolts and engine rear mounting to the engine mounting spacer.
Torque: 65 N·m (660 kgf·cm, 48 ft·lbf)

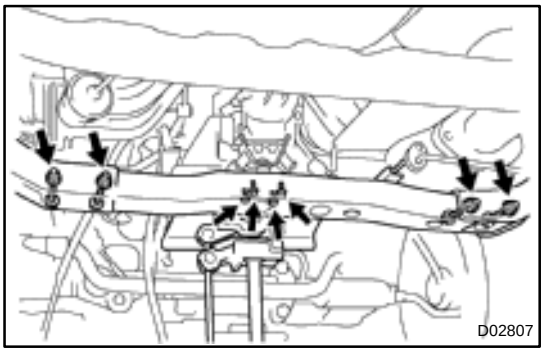
D02807

11. INSTALL CROSSMEMBER

(a) Install the 4 nuts, bolts, washers and crossmember.
Torque: 72 N·m (734 kgf·cm, 53 ft·lbf)

(b) Install the 4 bolts on the rear mounting side to the engine rear mounting insulator.
Torque: 18.5 N·m (189 kgf·cm, 14 ft·lbf)

(c) Connect the crossmember to the O–ring.

12. INSTALL NO.1 AND NO.2 VEHICLE SPEED SENSORS (See page AT–7)

13. INSTALL PROPELLER SHAFT (See page PR–8)

SHIFT LOCK SYSTEM

AT00Z–02

LOCATION

Column shift:

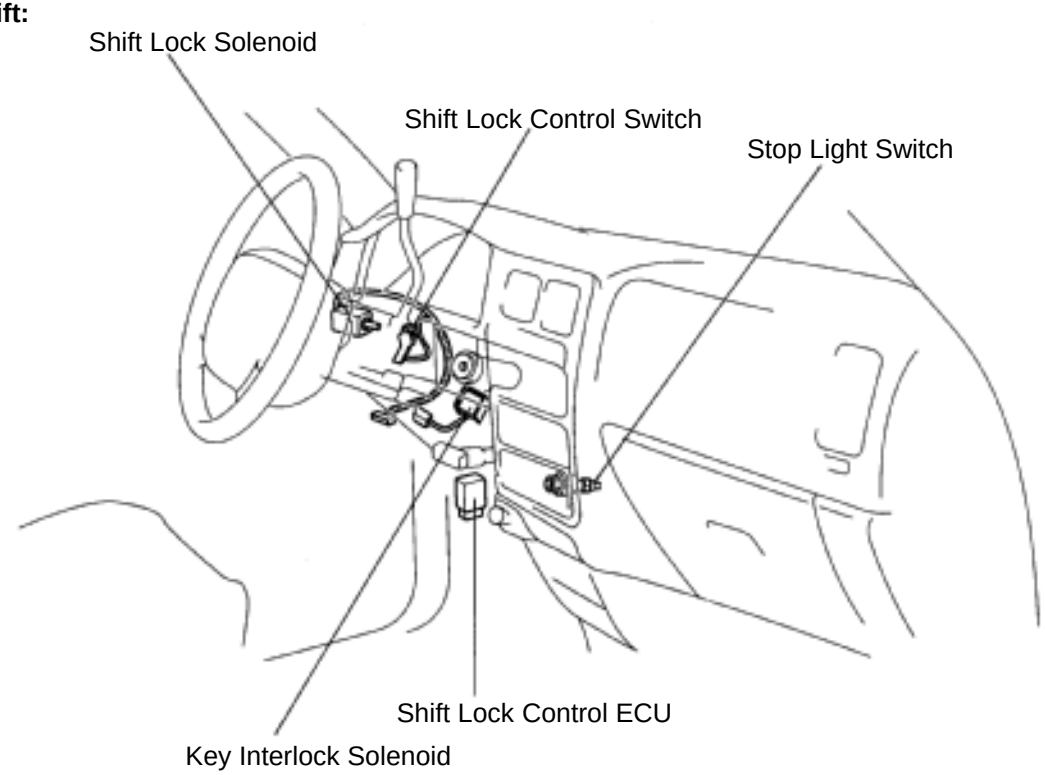

Floor shift:

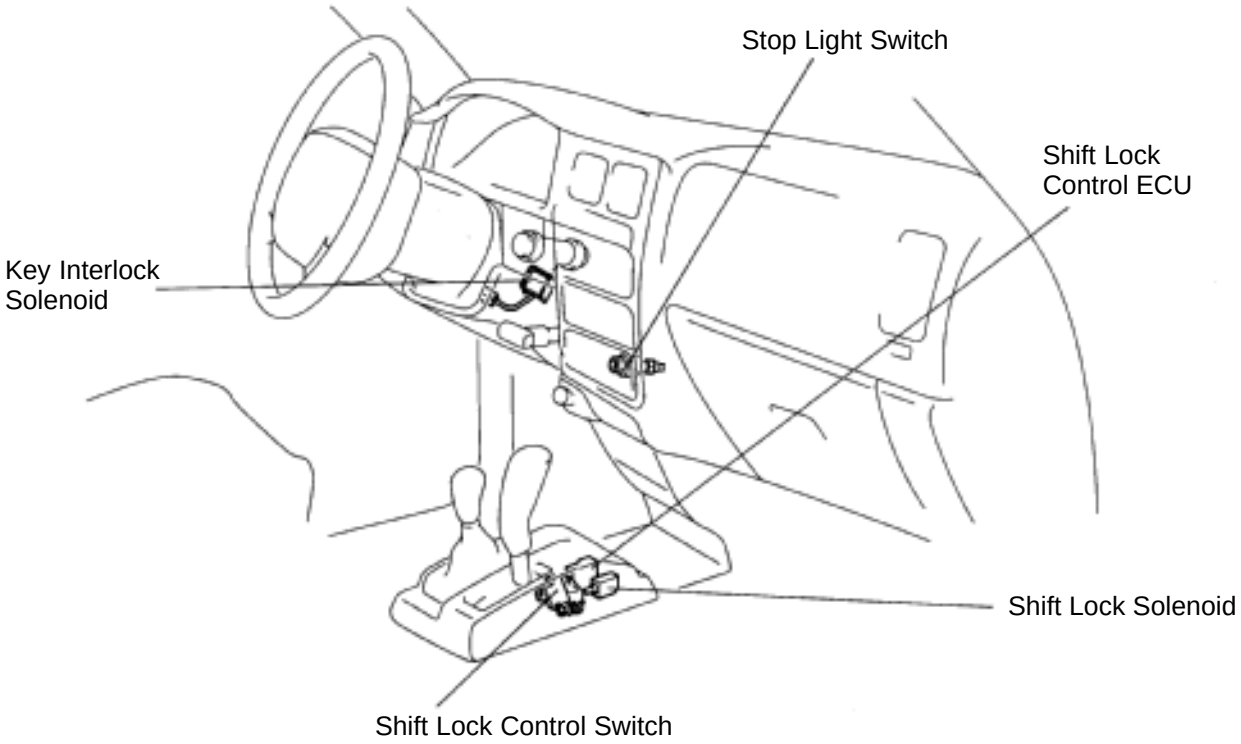

Q07187
Q07500

Z15533

THROTTLE CABLE

AT00Y–02

ON–VEHICLE REPAIR

1. DISCONNECT THROTTLE CABLE

(a) Disconnect the cable from the throttle linkage.

(b) Disconnect the cable from the cable clamps in the engine compartment.

(c) Remove the bolt and disconnect the cable clamp from the torque converter clutch housing.

2. REMOVE VALVE BODY (See page AT–10)

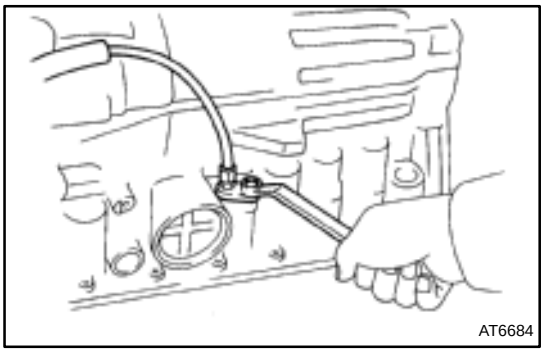

3. REMOVE THROTTLE CABLE

Remove the retaining bolt and pull out the throttle cable.

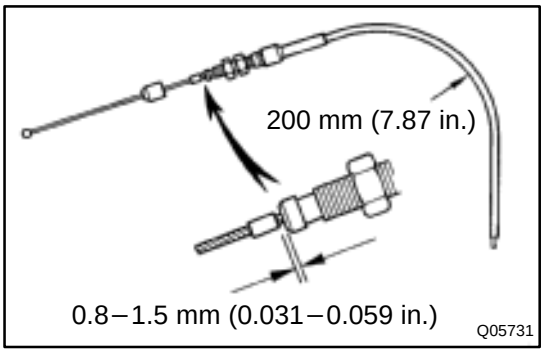

4. INSTALL THROTTLE CABLE

If the throttle cable is new, perform the following operations (a) – (c).

(a) Bend the cable so that there is radius of about 200 mm (7.87 in.).

(b) Pull the inner cable lightly until the resistance is slightly felt, and hold it there.

(c) Stake the stopper, 0.8 – 1.5 mm (0.031 – 0.059 in.) from the end of the outer cable.

(d) Install a new O–ring to the throttle cable.

(e) Pull the throttle cable and install the retaining bolt.
Torque: 10 N·m (100 kgf·cm, 7 kgf·cm)

5. INSTALL VALVE BODY (See page AT–10)

6. CONNECT THROTTLE CABLE TO ENGINE

7. INSTALL DRAIN PLUG
Torque: 20 N·m (205 kgf·cm, 15 ft·lbf)

8. FILL ATF AND CHECK FLUID LEVEL
(See page DI–342)

9. ADJUST THROTTLE CABLE (See page DI–342)

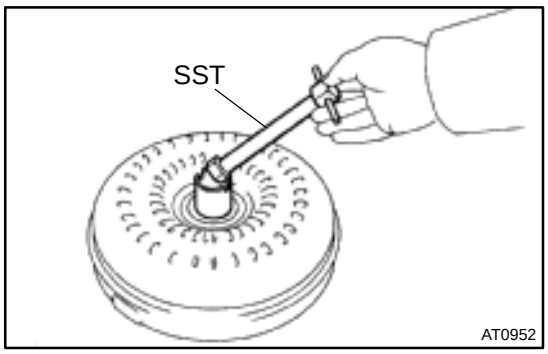

TORQUE CONVERTER CLUTCH AND DRIVE PLATE

AT00O–05

INSPECTION

1. INSPECT ONE–WAY CLUTCH

(a) Install SST in the inner race of one–way clutch.
SST 09350–30020 (09351–32010)

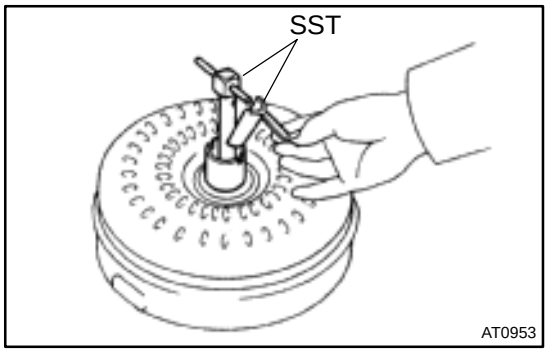

(b) Install SST so that it fits in the notch of the converter hub and outer race of the one–way clutch.
SST 09350–30020 (09351–32010 09351–32020)

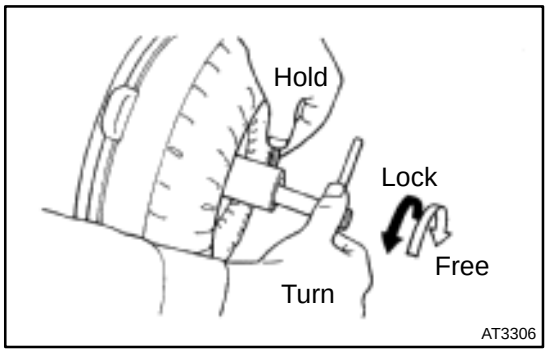

(c) With the torque converter clutch standing on its side, check that the clutch locks when turned counterclockwise, and rotates freely and smoothly clockwise.

If necessary, clean the converter clutch and retest the clutch. Replace the converter clutch if the clutch still fails the test.

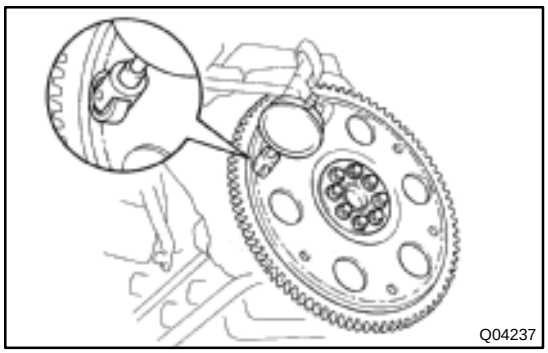

2. MEASURE DRIVE PLATE RUNOUT AND INSPECT RING GEAR

Set up a dial indicator, measure drive plate runout.

Maximum runout: 0.20 mm (0.0079 in.)

If runout is not within the specification, replace the drive plate. If installing a new drive plate, note the orientation of spacers and tight the bolts.

Torque:
3RZ–FE: 74 N·m (750 kgf·cm, 54 ft·lbf)
5VZ–FE: 83 N·m (850 kgf·cm, 61 ft·lbf)

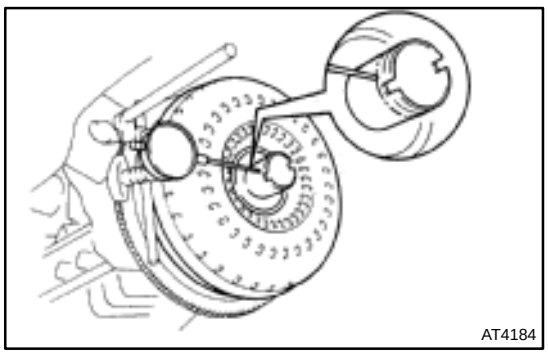

3. MEASURE TORQUE CONVERTER CLUTCH SLEEVE RUNOUT

Temporarily mount the torque converter clutch to the drive plate. Set up a dial indicator.

Maximum runout: 0.30 mm (0.0118 in.)

If runout is not within the specification, try to correct by reorienting the installation of the torque converter clutch.

HINT:

Mark the position of the torque converter clutch to ensure correct installation.

VALVE BODY ASSEMBLY

AT00U–02

ON–VEHICLE REPAIR

CAUTION:

When working with FIPG material, you must observe the followings.

- **Using a razor blade and a gasket scraper, remove all old FIPG material from the gasket surfaces.**
- **Thoroughly clean all components to remove all loose material.**
- **Clean both sealing surfaces with a non–residue solvent.**
- **Apply FIPG in an approx. 1 mm (0.04 in.) wide bead along the sealing surface.**
- **Parts must be assembled within 10 minutes of application. Otherwise, the FIPG material must be removed and reapplied.**

1. REMOVE DRAIN PLUG AND DRAIN ATF

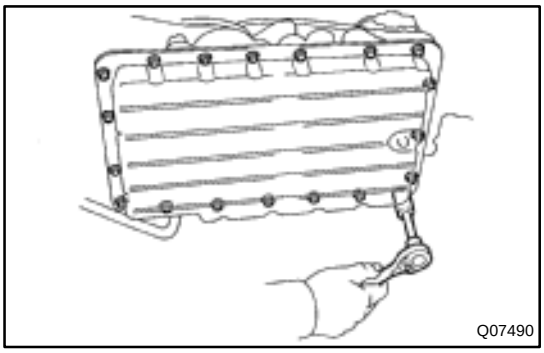

2. REMOVE OIL PAN

NOTICE:

Some fluid will remain in the oil pan.

(a) Remove the 19 bolts.

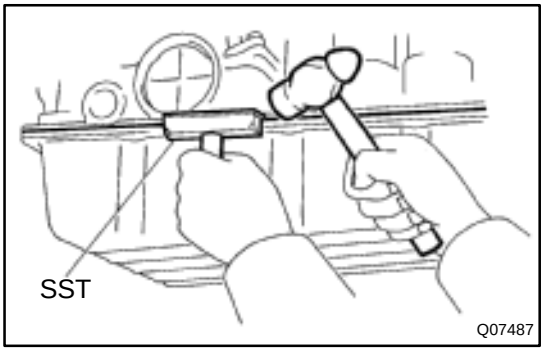

(b) Install the blade of SST between the transmission case and oil pan, cut off applied sealer, and remove the oil pan.
SST 09032–00100

NOTICE:

When removing the oil pan, be careful not to damage the oil pan flange.

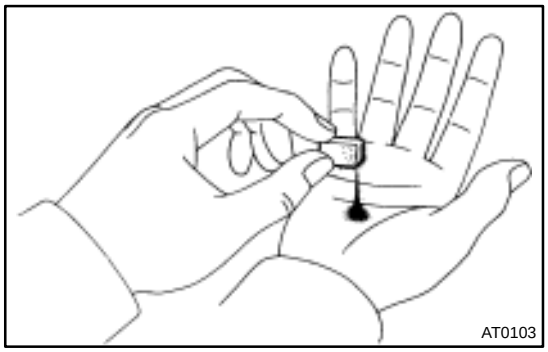

3. EXAMINE PARTICLES IN PAN

Remove the magnets and use them to collect steel particles. Carefully look at the foreign matter and particles in the pan and on the magnets to anticipate the type of wear you will find in the transmission.

Steel (magnetic) ... bearing, gear and clutch plate wear

Brass (non–magnetic) ... bushing wear

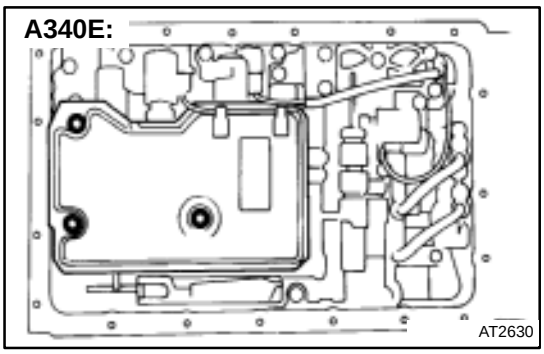

4. A340E:
REMOVE OIL STRAINER

NOTICE:

Be careful as some fluid will come out of the oil strainer.

(a) Separate the solenoid wire.
(b) Remove the 3 bolts, oil strainer and 2 gaskets.

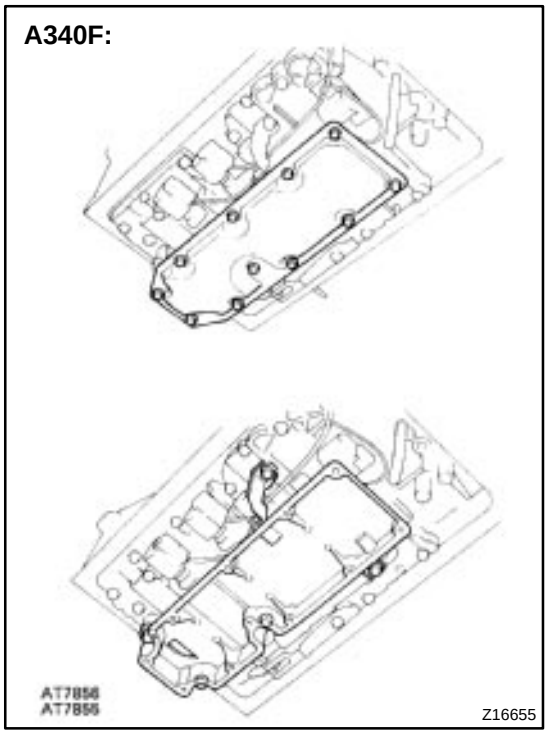

5. A340F:
REMOVE OIL STRAINER

NOTICE:

Be careful as some fluid will come out of the oil strainer.

(a) Remove the 11 bolts, oil strainer from the oil strainer case.
(b) Remove the 3 gaskets from the oil strainer.
(c) Remove the 5 bolts and oil strainer case.

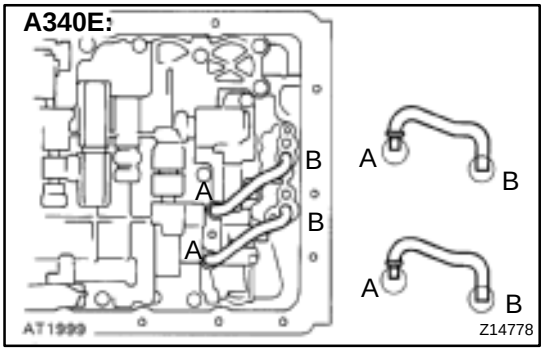

6. A340E:
REMOVE OIL PIPE

Pry up both pipe ends with a large screwdriver and remove the 2 pipes.

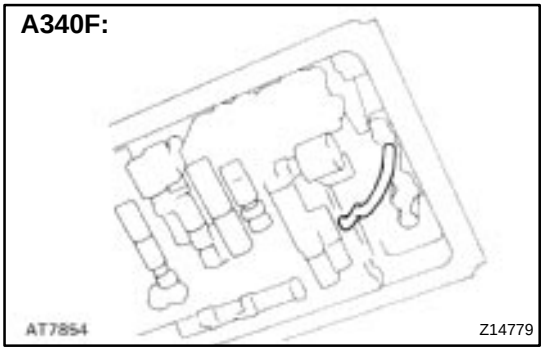

7. A340F:
REMOVE OIL PIPE

Pry up both pipe ends with a large screwdriver and remove the pipe.

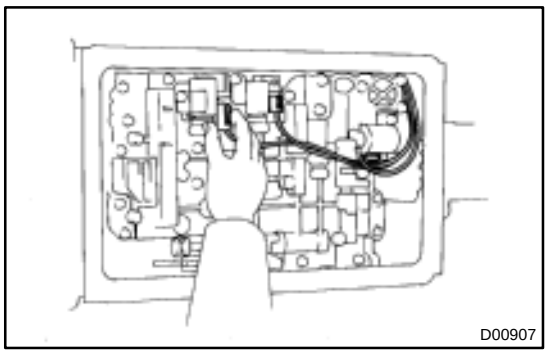

8. DISCONNECT 3 CONNECTORS FROM EACH SOLENOID VALVES

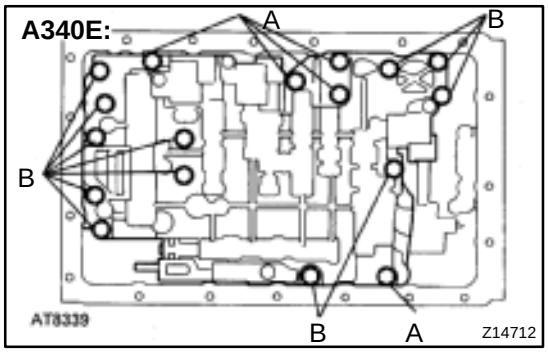

9. REMOVE VALVE BODY

(a) A340E:
Remove the 17 bolts.
Bolt length:
Bolt A: 23 mm (0.91 in.)
Bolt B: 32 mm (1.26 in.)

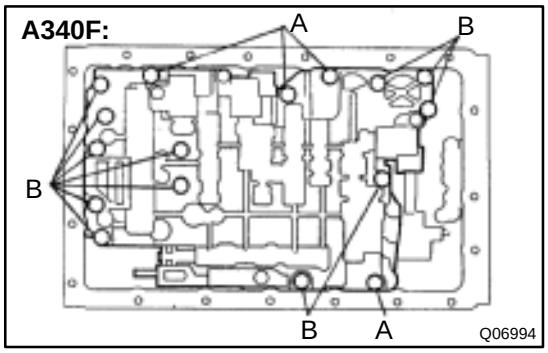

(b) A340F:
Remove the 16 bolts.
Bolt length:
Bolt A: 23 mm (0.91 in.)
Bolt B: 32 mm (1.26 in.)

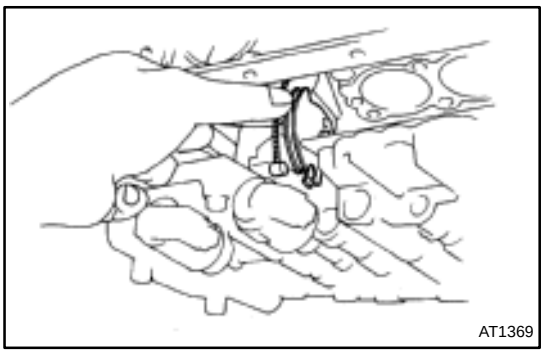

(c) Disconnect the throttle cable from the cam.
(d) Remove the valve body.

NOTICE:
Be careful not to drop the check ball body and spring.

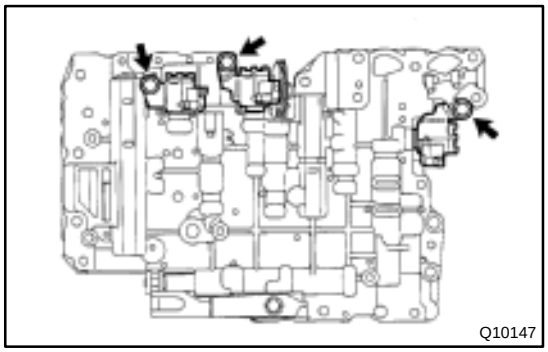

10. REMOVE SHIFT SOLENOID VALVE

(a) Remove the solenoid valve mounting bolts.
(b) Remove the 3 solenoid valves.
(c) Remove the 3 O–rings from the solenoid valves.

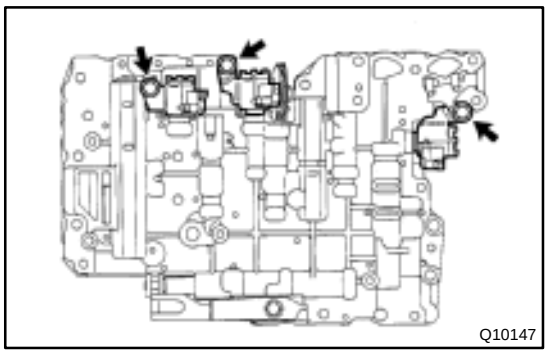

11. INSTALL SHIFT SOLENOID VALVE

(a) Coat the 3 new O–rings with ATF.
(b) Install the 3 O–rings to the shift solenoid valves.
(c) Install the 3 shift solenoid valves with the 3 bolts.
Torque: 10 N·m (100 kgf·cm, 7 ft·lbf)

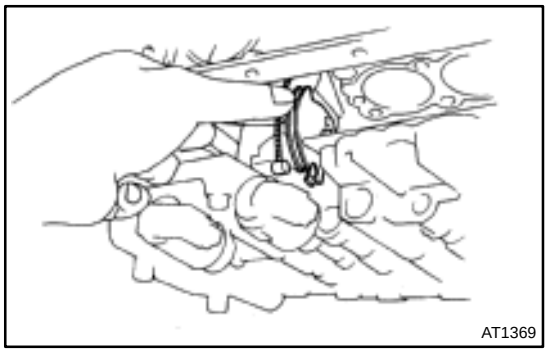

12. INSTALL VALVE BODY

(a) Align the groove of the manual valve to the pin of the lever.
(b) Connect the throttle cable to the cam.

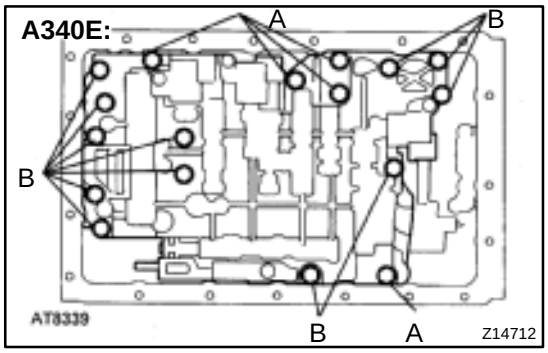

(c) A340E:
Install the 17 bolts.
Torque: 10 N·m (100 kgf·cm, 7 ft·lbf)
Bolt length:
Bolt A: 23 mm (0.91 in.)
Bolt B: 32 mm (1.26 in.)

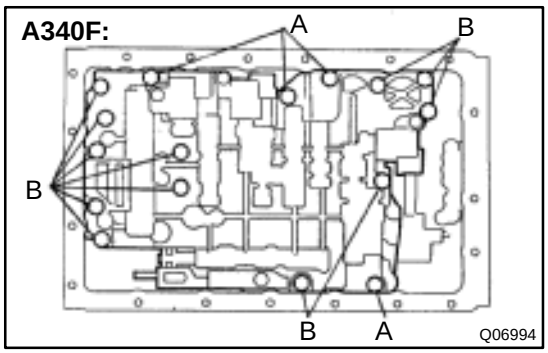

(d) A340F:
Install the 16 bolts.
Torque: 10 N·m (100 kgf·cm, 7 ft·lbf)
Bolt length:
Bolt A: 23 mm (0.91 in.)
Bolt B: 32 mm (1.26 in.)

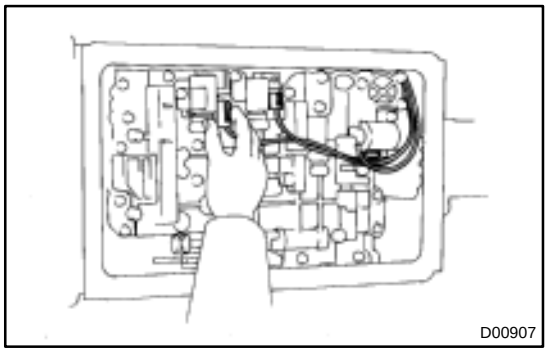

13. CONNECT 3 CONNECTORS TO EACH SHIFT SOLENOID VALVE

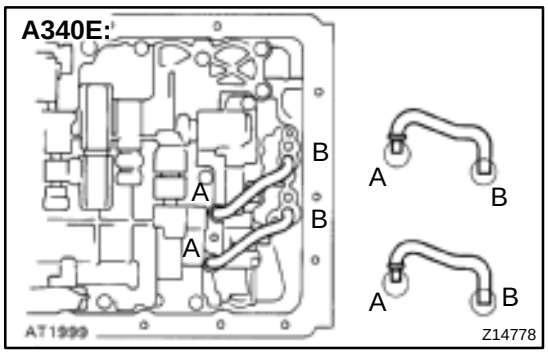

14. A340E:
INSTALL OIL PIPE

Using a plastic hammer, install the 2 pipes into position.

NOTICE:

- **Be careful not to bend or damage the pipes.**
- **Make sure that the oil pipes or magnet do not interfere with the oil pan.**

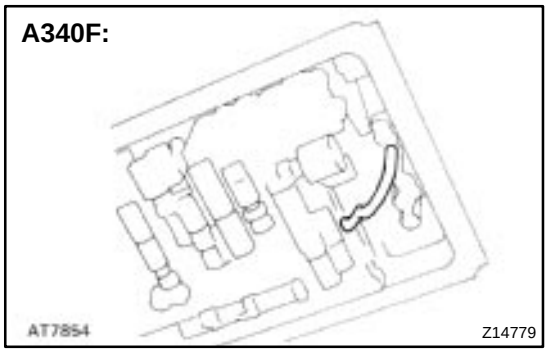

15. A340F:
INSTALL OIL PIPE

Using a plastic hammer, install the pipe into position.

NOTICE:

- **Be careful not to bend or damage the pipe.**
- **Make sure that the oil pipe or magnet do not interfere with the oil pan.**

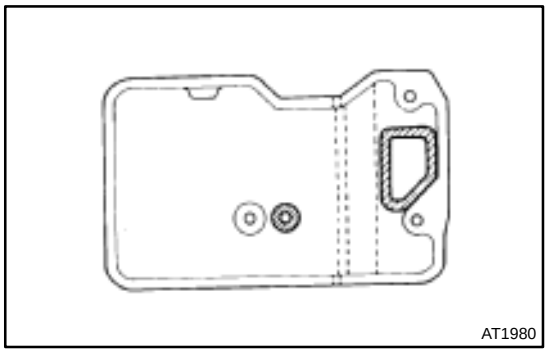

16. A340E:
INSTALL OIL STRAINER

(a) Install 2 new gaskets.

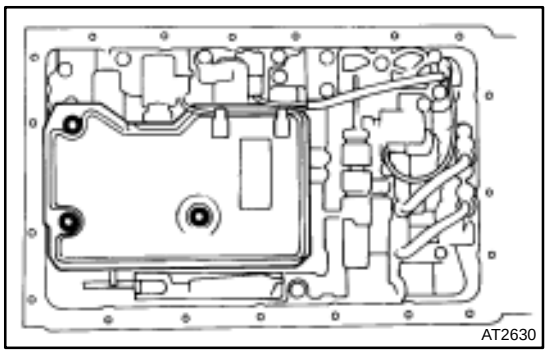

(b) Install the oil strainer with the 3 bolts.
Torque: 10 N·m (100 kgf·cm, 7 ft·lbf)

(c) Clamp solenoid wire.

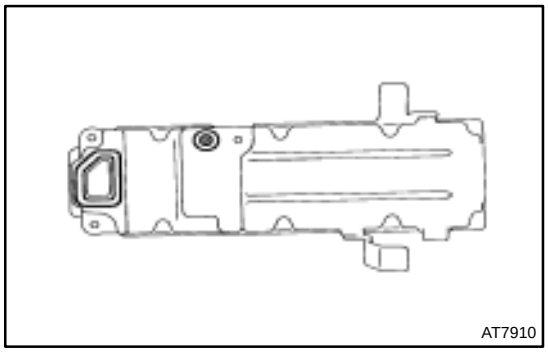

17. A340F:
INSTALL OIL STRAINER

(a) Install 2 new gaskets in the oil strainer case.

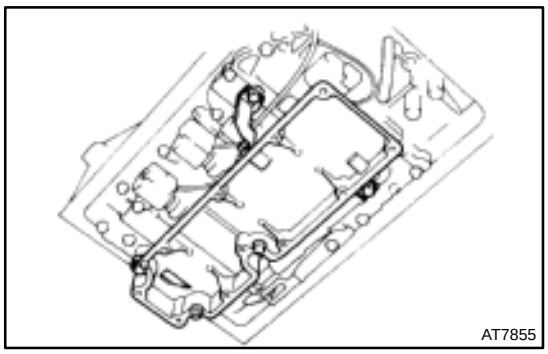

(b) Install the oil strainer case with the 5 bolts.
Torque: 10 N·m (100 kgf·cm, 7 ft·lbf)

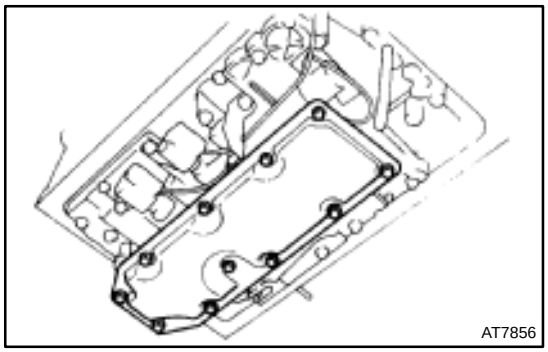

(c) Install a new gasket to the oil strainer case.
(d) Install the oil strainer with the 11 bolts.
Torque: 6.9 N·m (70 kgf·cm, 61 in.·lbf)

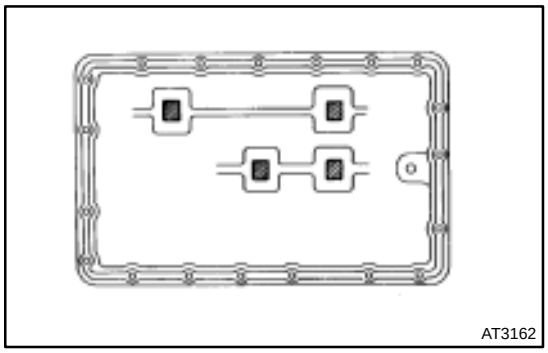

18. INSTALL OIL PAN

(a) A340E:
Install the 4 magnets in the indications of the oil pan.

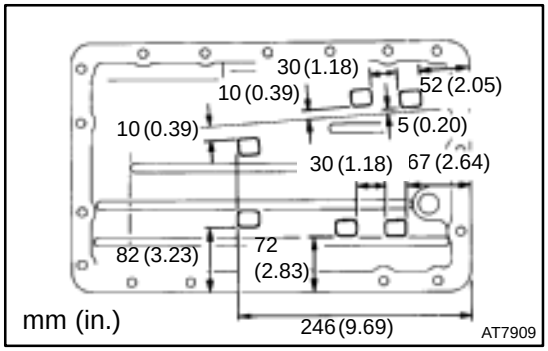

(b) A340F:
Install the 6 magnets in the indications of the oil pan.

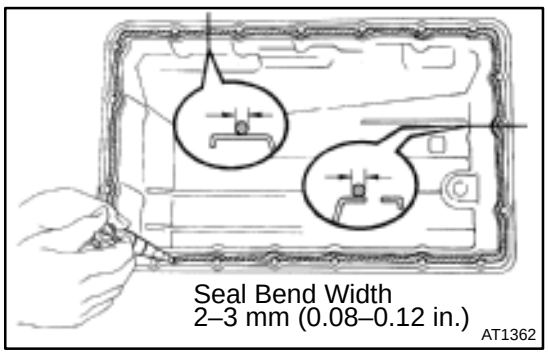

(c) Remove any packing material and be careful not to drop oil on the contacting surfaces of the transmission case and oil pan.
(d) Apply FIPG to the oil pan.
FIPG:
Part No. 08826 – 00090, THREE BOND 1281 or equivalent

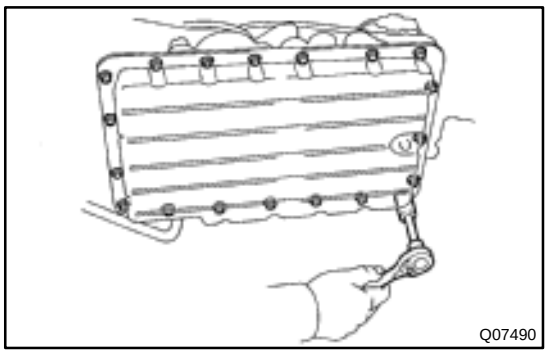

(e) Install the oil pan with the 19 bolts.
Torque: 7.4 N·m (75 kgf·cm, 65 in.·lbf)

19. INSTALL DRAIN PLUG
Torque: 20 N·m (205 kgf·cm, 15 ft·lbf)

20. FILL AND CHECK ATF (See page DI–342)

A340E:

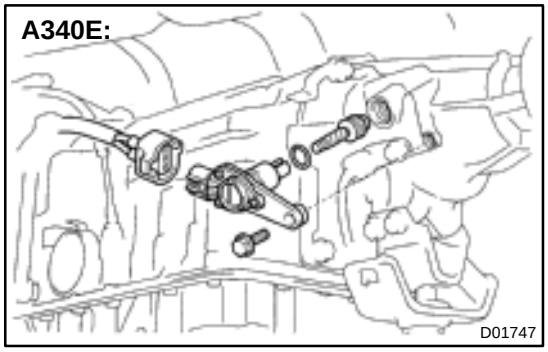

A340F:

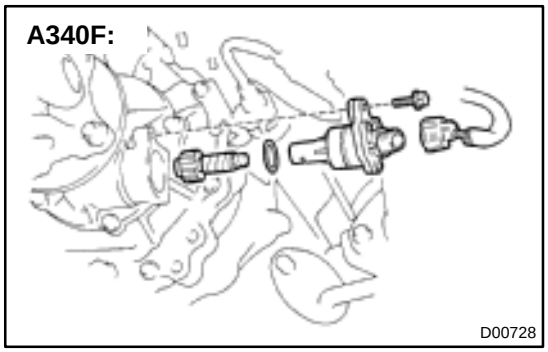

A340E:

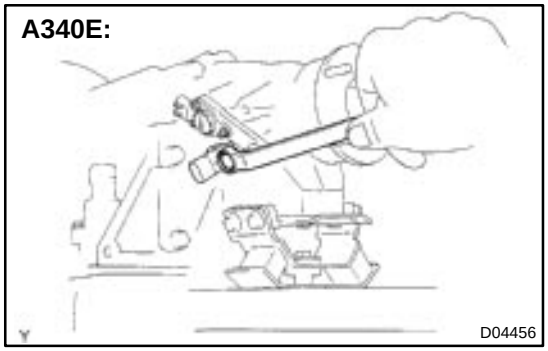

A340F:

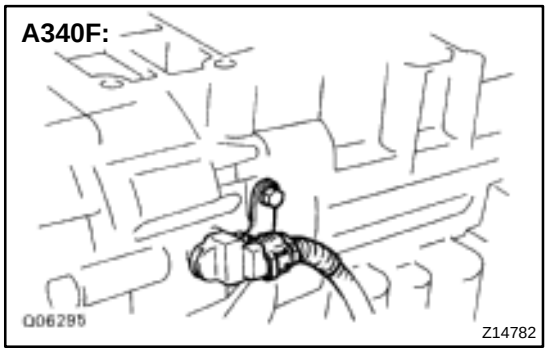

VEHICLE SPEED SENSOR

AT00V–02

ON–VEHICLE REPAIR

1. DISCONNECT NO.1 VEHICLE SPEED SENSOR CONNECTOR

2. REMOVE NO.1 VEHICLE SPEED SENSOR ASSEMBLY

(a) Remove the bolt and No.1 vehicle speed sensor assembly.

(b) Remove the speedometer driven gear and O–ring from the No.1 vehicle speed sensor.

3. INSTALL NO.1 VEHICLE SPEED SENSOR ASSEMBLY

(a) Coat a new O–ring with ATF.

(b) Install the O–ring and speedometer driven gear to the No.1 vehicle speed sensor.

(c) Install the No.1 vehicle speed sensor to the extension housing and torque the bolt.

Torque: 16 N·m (160 kgf·cm, 12 ft·lbf)

4. CONNECT NO.1 VEHICLE SPEED SENSOR CONNECTOR

5. DISCONNECT NO.2 VEHICLE SPEED SENSOR CONNECTOR

6. REMOVE NO.2 VEHICLE SPEED SENSOR

(a) Remove the bolt and No.2 vehicle speed sensor.

(b) Remove the O–ring from the No.2 vehicle speed sensor.

7. INSTALL NO.2 VEHICLE SPEED SENSOR

(a) Coat a new O–ring with ATF and install it to the No.2 vehicle speed sensor.

(b) Install the No.2 vehicle speed sensor and torque the bolt.

Torque: 5.4 N·m (55 kgf·cm, 48 in.·lbf)

8. CONNECT NO.2 VEHICLE SPEED SENSOR CONNECTOR

BACK WINDOW GLASS

COMPONENTS

BO07L–02

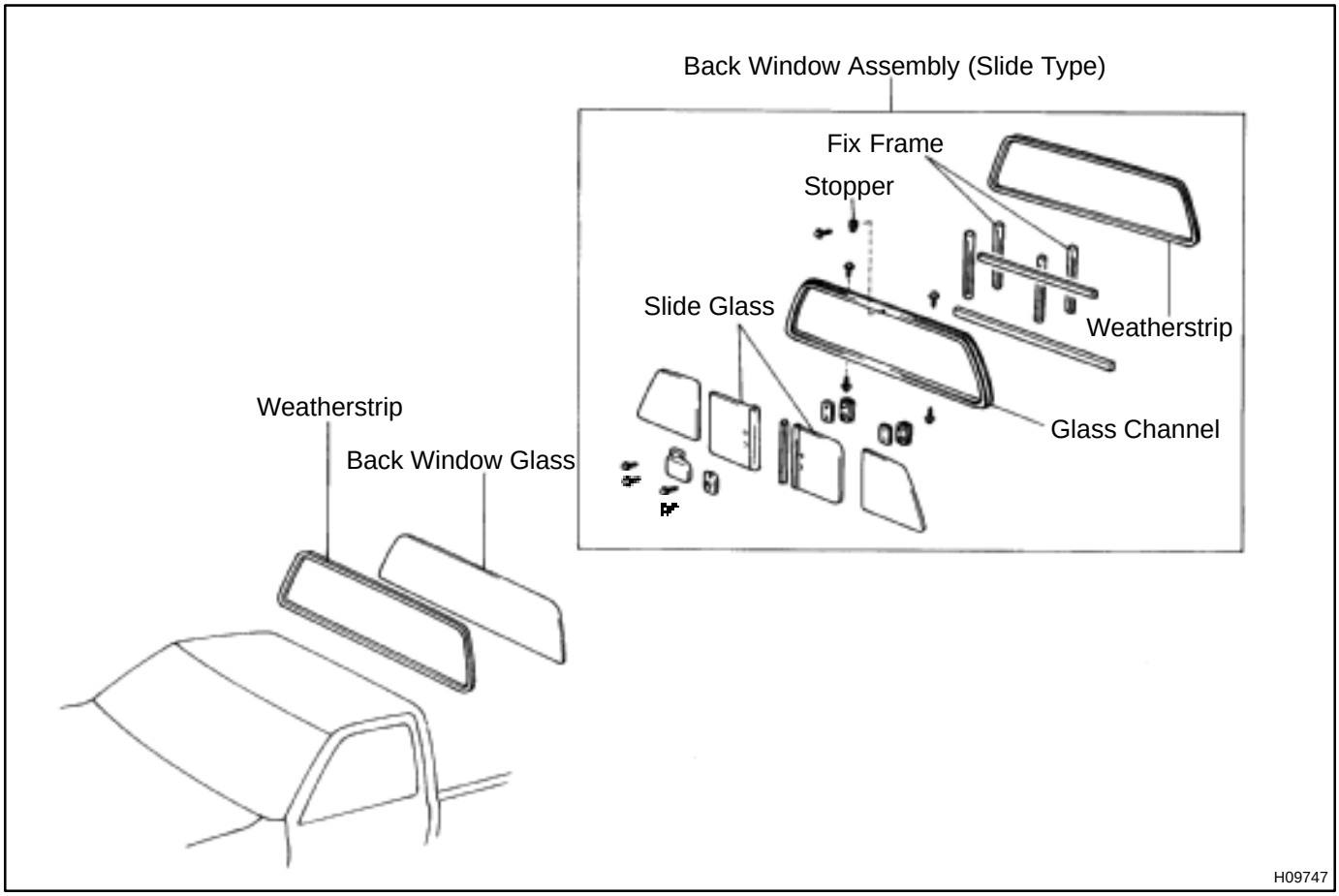

BO07N–02

DISASSEMBLY

1. REMOVE STOPPER

2. REMOVE FIX FRAMES

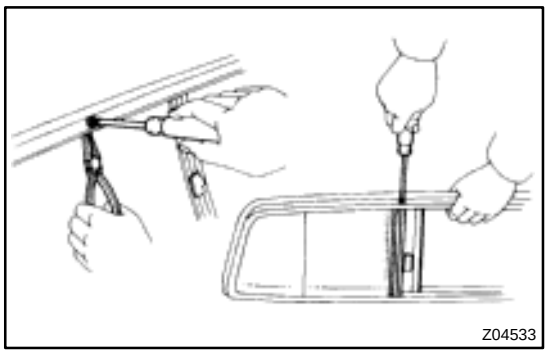

3. REMOVE SLIDE GLASS

Pull apart the channels and remove the 2 slide glass at the center area of the glass channel.

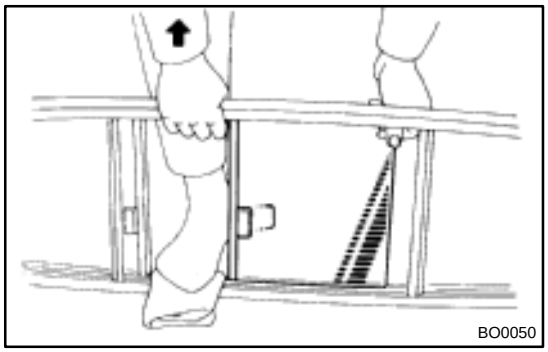

4. REMOVE NON–SLIDE GLASS

(a) Pull apart the channels and remove the fix frame, as shown in the illustration.

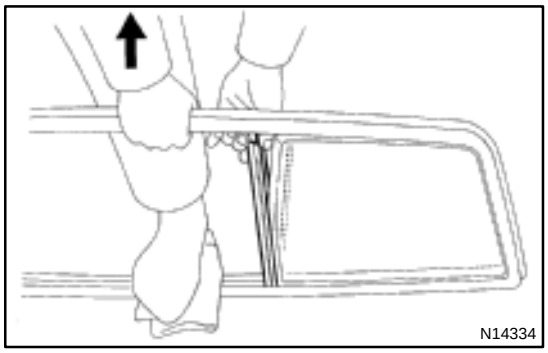

(b) Pull apart the channels and remove the non–slide glass, as shown in the illustration.

HINT:

Apply soapy water to the contact surface of the weatherstrip and glass channel flange.

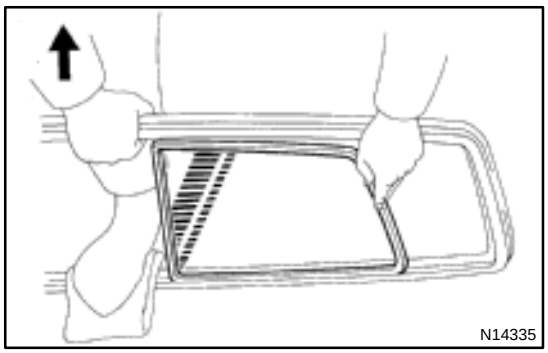

(c) Employ the same manner described above to the other side.

BO07P–02

INSTALLATION

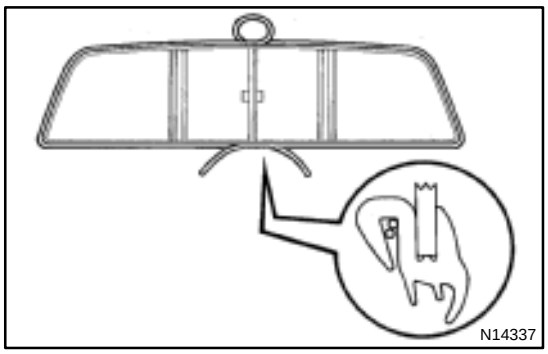

1. INSTALL BACK WINDOW GLASS WITH WINDOW FRAME

(a) Install the working cord to the frame, as shown in the illustration.

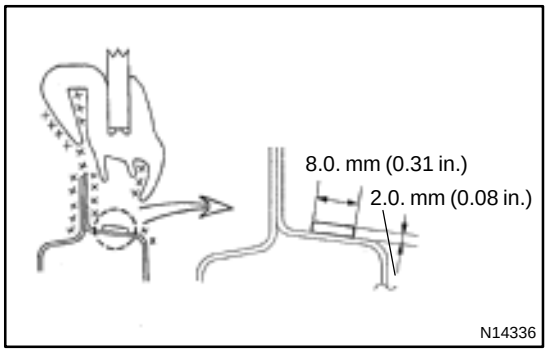

(b) Apply soapy water to the contact surface of the body and the weatherstrip lip.

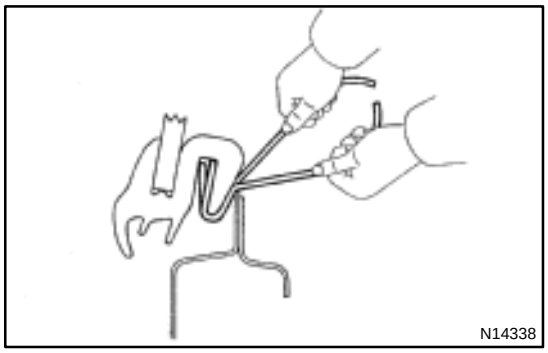

(c) Hold the glass in position on the body.

(d) Install the glass by pulling the cord from the room side, while pushing weatherstrip from the outside with your open hand.

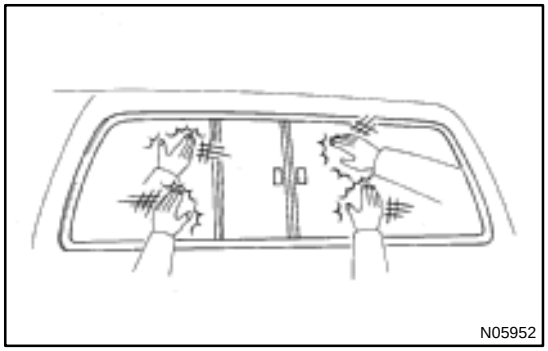

(e) To mark the glass fit in place, tap from the outside with your open hand.

2. INSPECT FOR LEAKS AND REPAIR

(a) Conduct a leak test after the hardening time has elapsed.

(b) Seal any leak with sealant.
Part No. 08833–00030 or equivalent

BO07O–02

REASSEMBLY

Reassembly is in the reverse order of disassembly (See page BO–36).

BO07M–02

REMOVAL

REMOVE BACK WINDOW GLASS WITH WINDOW FRAME

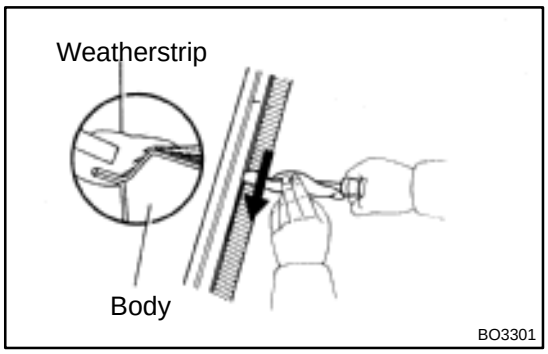

(a) Using a screwdriver, loosen the weatherstrip from the body.

NOTICE:

Be careful not to damage the body paint.

HINT:

Tape the screwdriver tip before use.

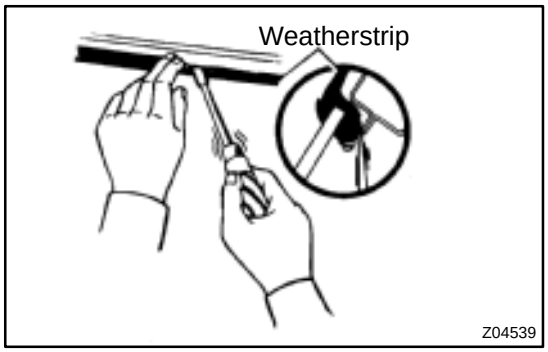

(b) Pry the lip of the weatherstrip outward from the interior part of the body flange.

(c) Pull the glass outwards, and remove it with the weatherstrip.

CLIP

BO06W–02

REPLACEMENT

The removal and installation methods of typical clips used in body parts are shown in the table below.
HINT:
If the clip is damaged during the operation, always replace it with a new clip.

Shape (Example)	Removal/Installation
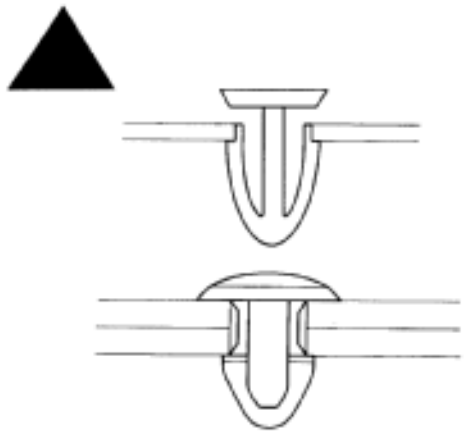	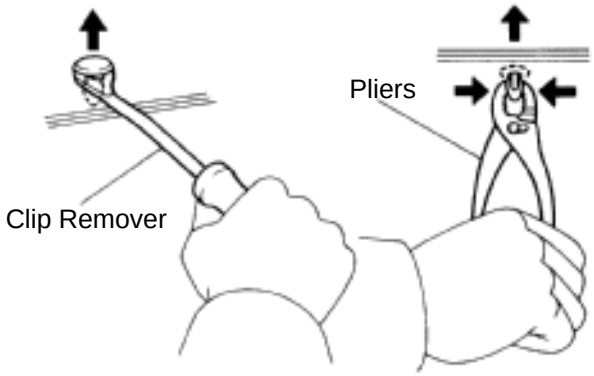
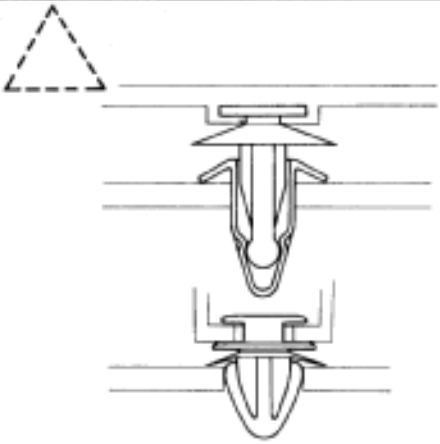	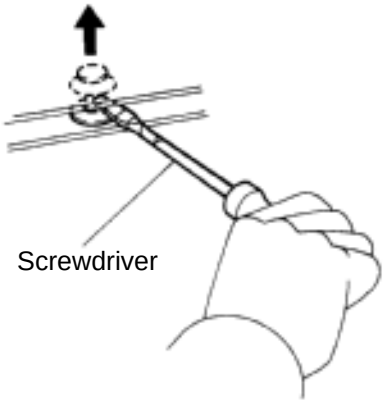
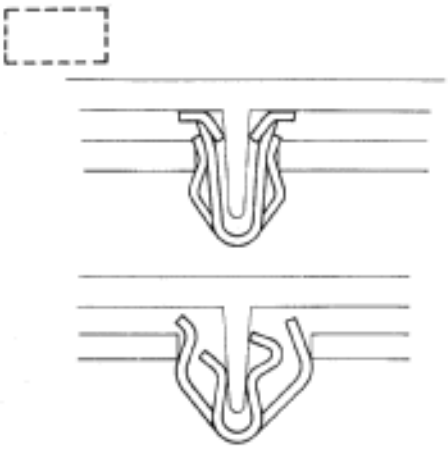	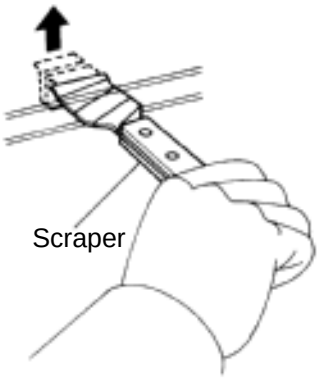

V00005

Shape (Example)	Removal/Installation
	Removal Installation 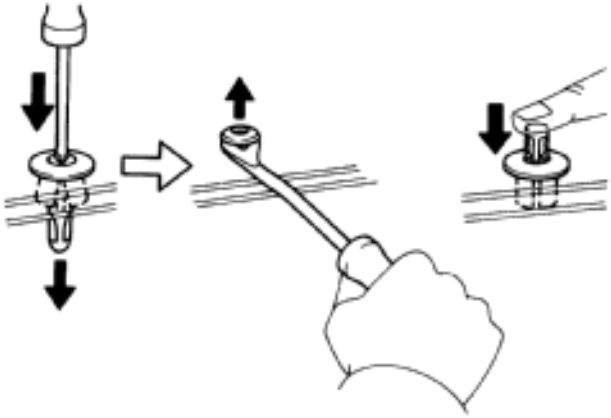
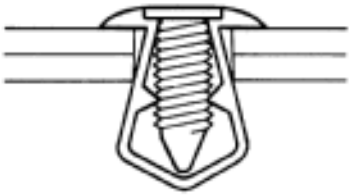	Removal Installation 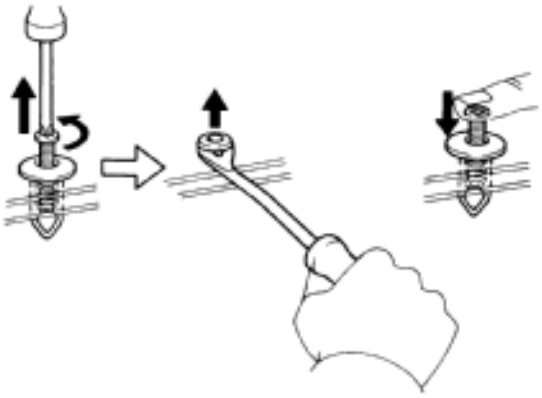

V00012

FRONT BUMPER

COMPONENTS

BO06Y–02

4WD:

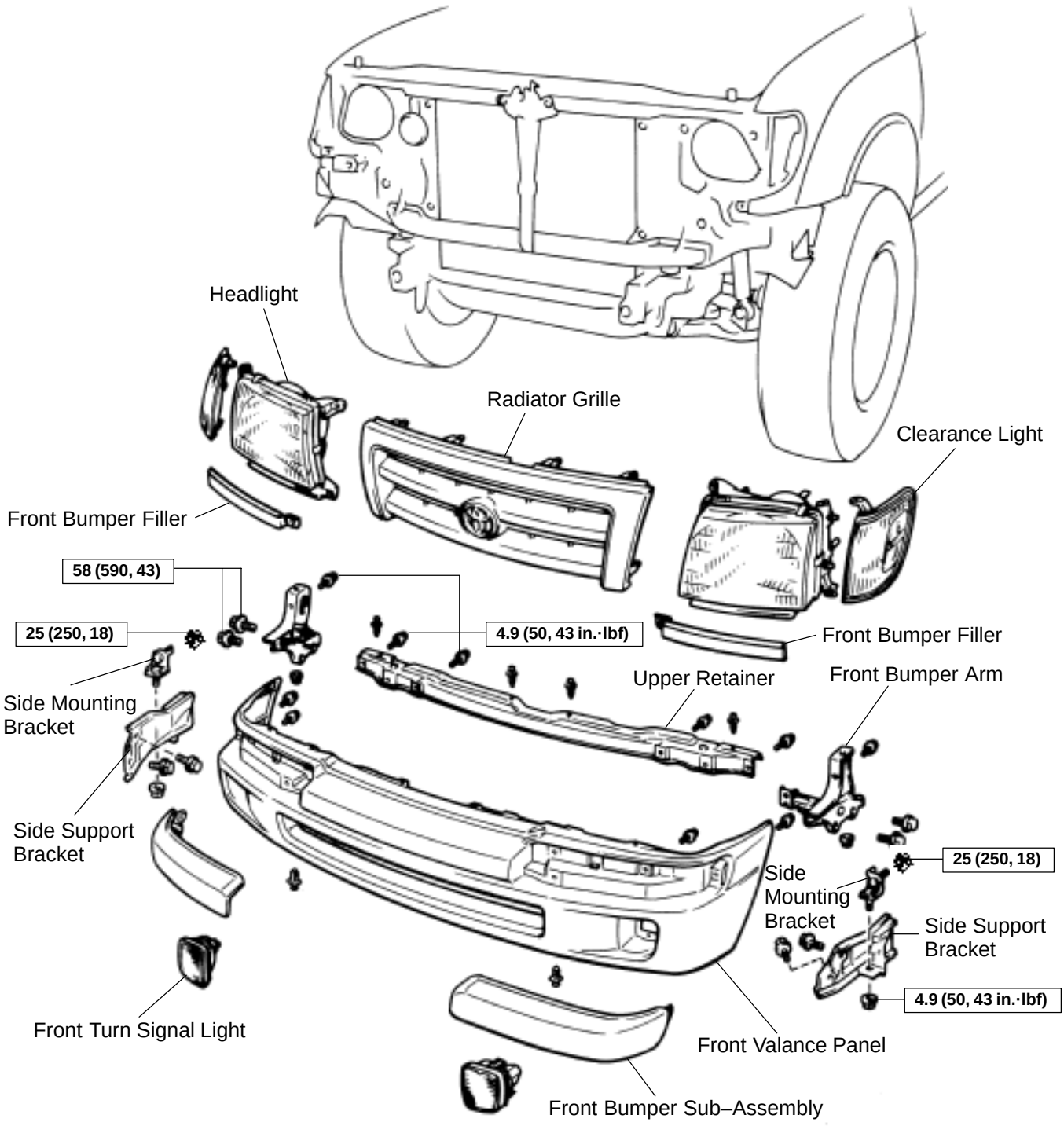

N·m (kgf·cm, ft·lbf) : Specified torque

H01565

2WD (with Chromed steel bumper):

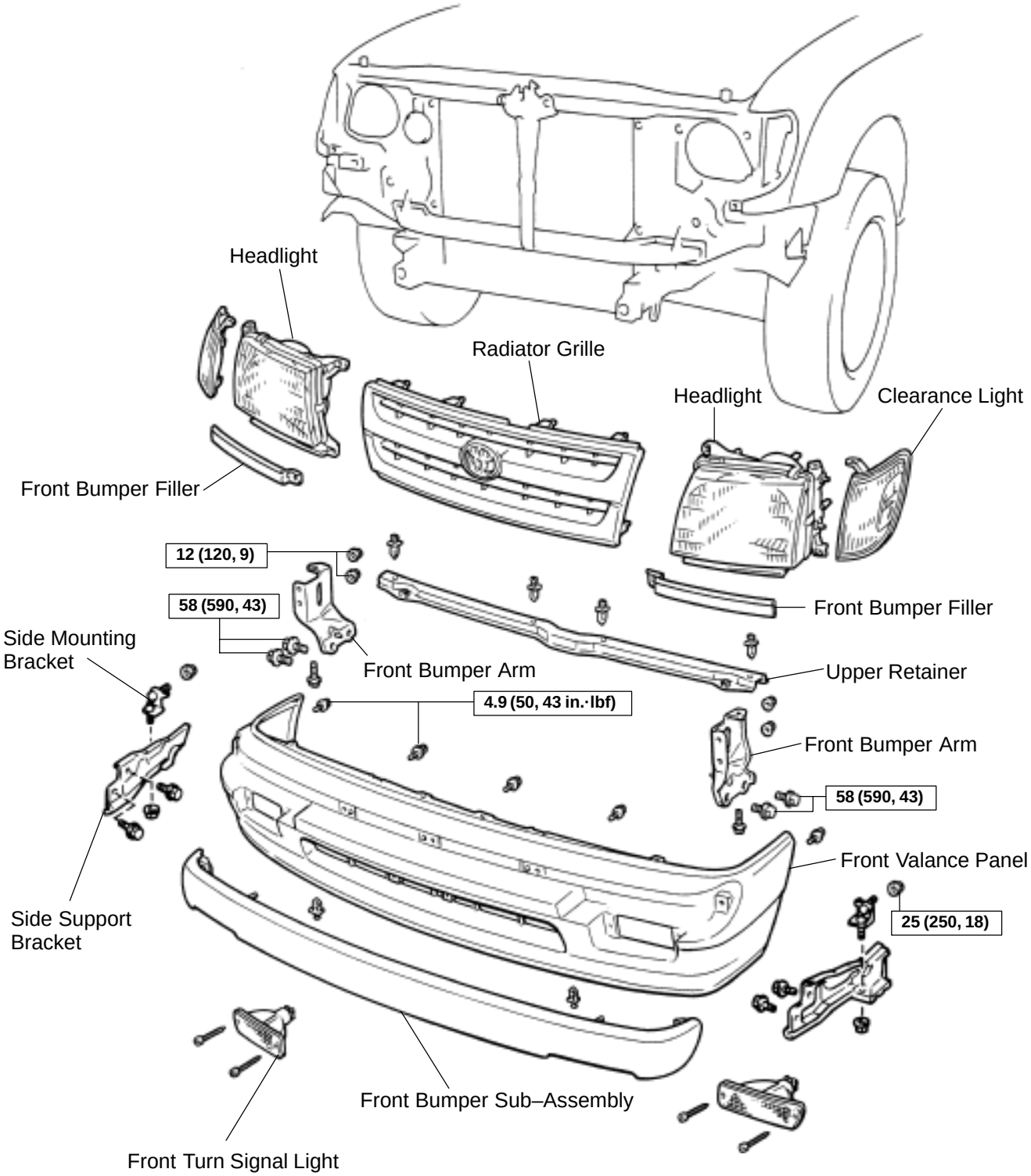

N·m (kgf·cm, ft·lbf) : Specified torque

H01566

2WD:

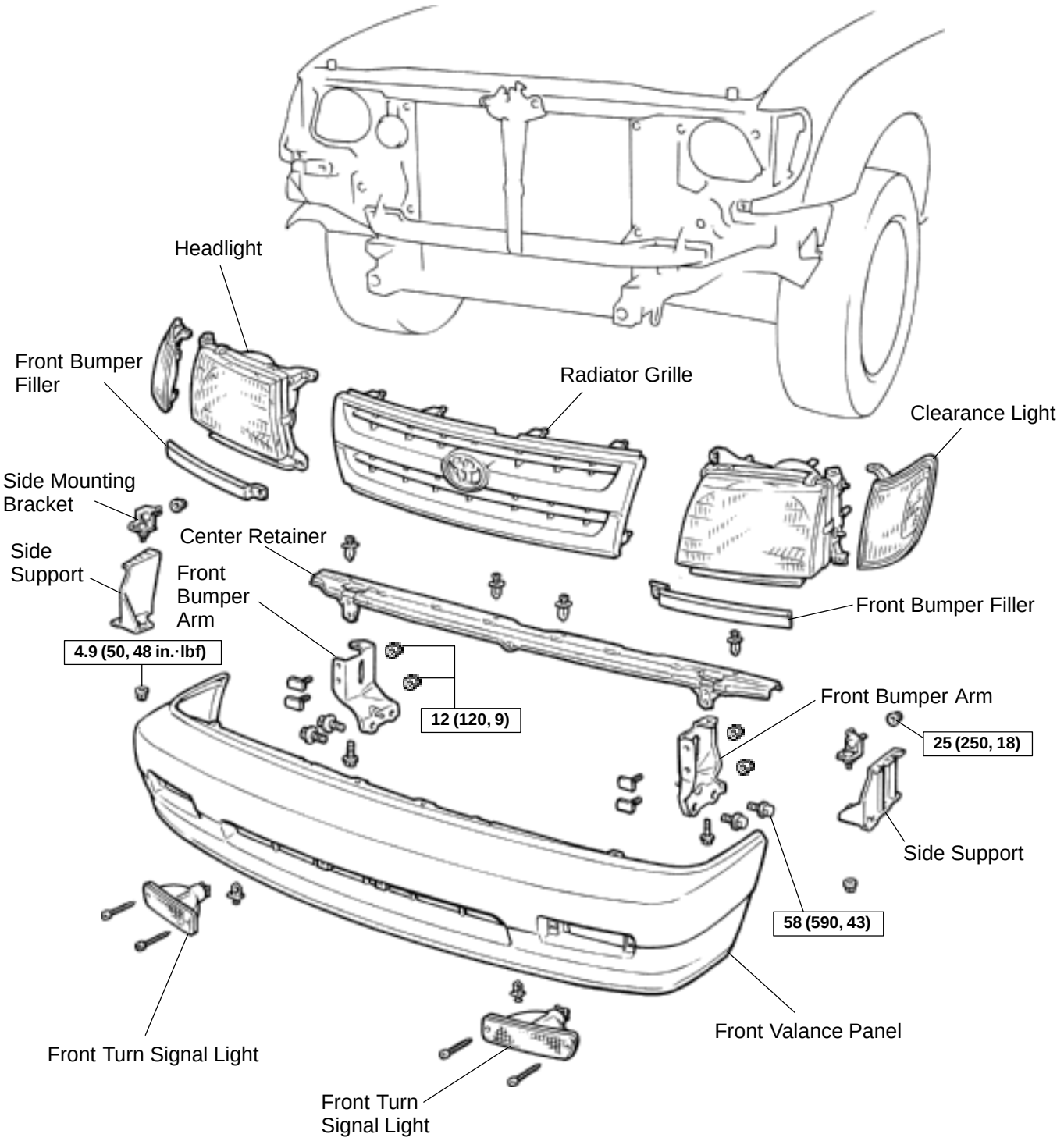

N·m (kgf·cm, ft·lbf) : Specified torque

H01567

BO072–02

ADJUSTMENT

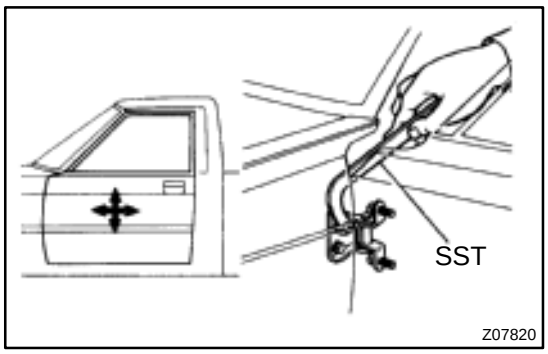

1. ADJUST DOOR IN FORWARD/ REARWARD AND VERTICAL DIRECTIONS

Using SST, adjust the door by loosening the body side hinge bolts.

SST 09812–00010

Torque: 23 N·m (230 kgf·cm, 17 ft·lbf)

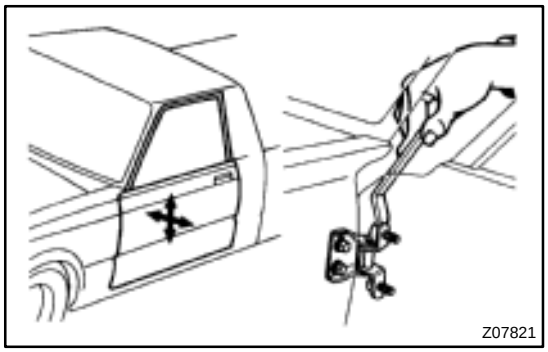

2. ADJUST DOOR IN LEFT/ RIGHT AND VERTICAL DIRECTIONS

Loosen the door side hinge bolts to adjust.

HINT:

Substitute the standard bolt for the centering bolts.

(See page BO–7)

Torque: 23 N·m (230 kgf·cm, 17 ft·lbf)

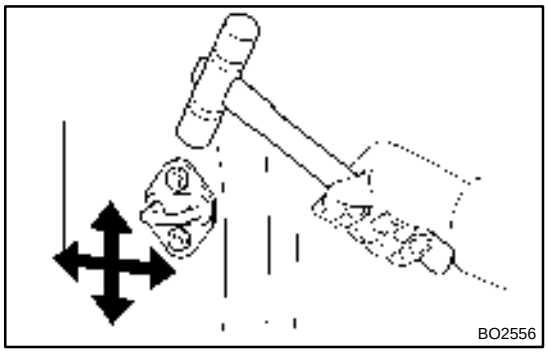

3. ADJUST DOOR LOCK STRIKER

(a) Check that the door fit and door lock linkages are adjusted correctly.

(b) Adjust the striker position by slightly loosening the striker mounting screws, and hitting the striker with a hammer.

(c) Tighten the striker mounting screws again.

Torque: 12 N·m (120 kgf·cm, 9 ft·lbf)

FRONT DOOR

COMPONENTS

BO070–02

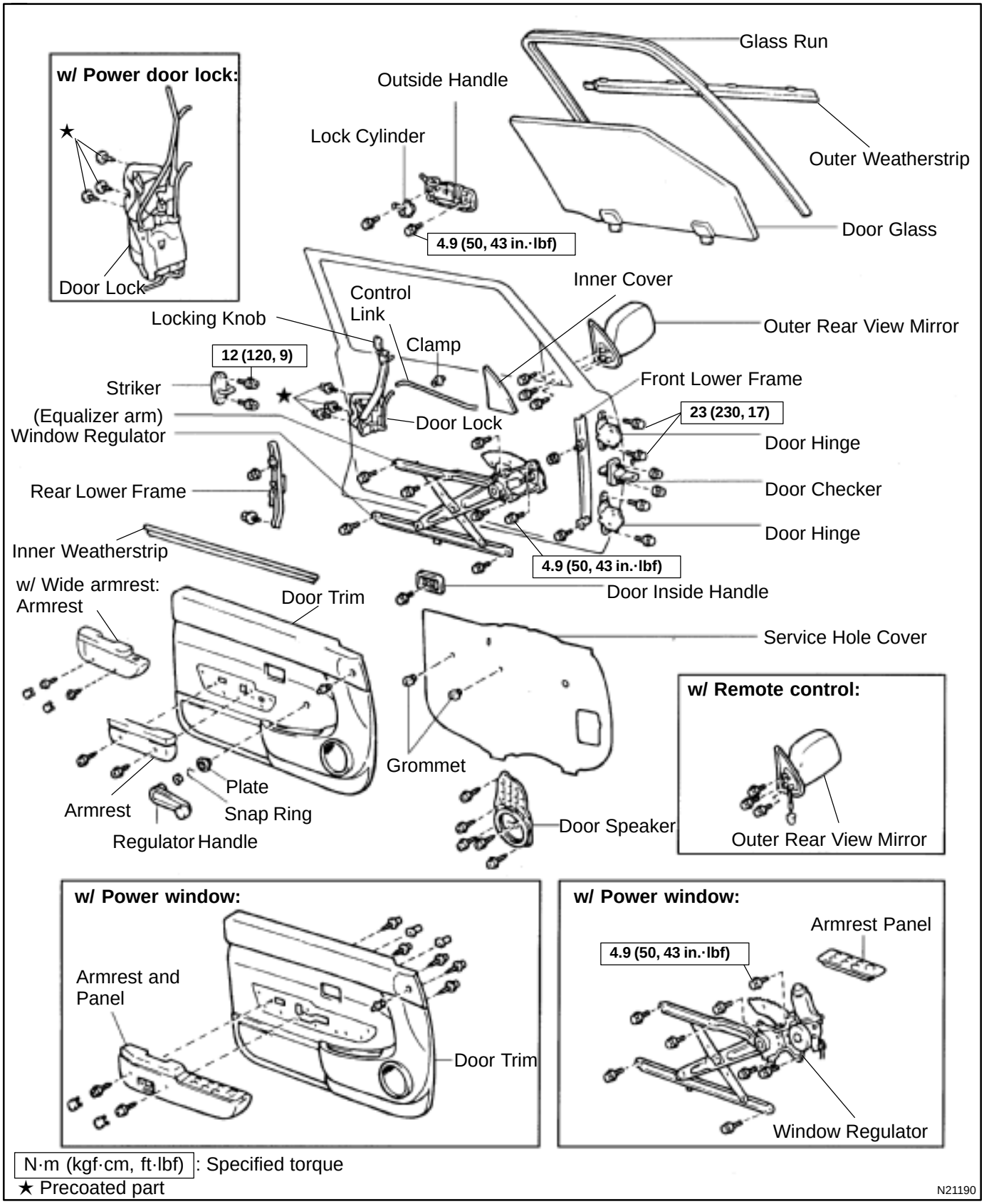

N·m (kgf·cm, ft·lbf) : Specified torque

★ Precoated part

N21190

BO071–02

DISASSEMBLY

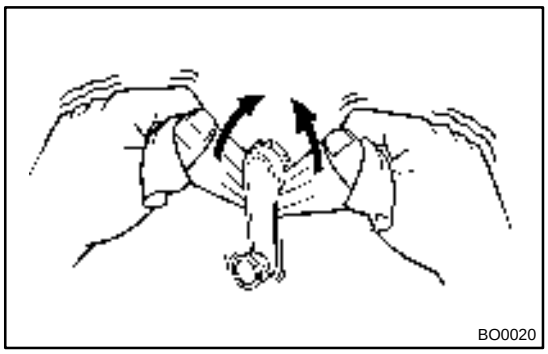

1. w/o Power window:
REMOVE REGULATOR HANDLE

Pull off the snap ring with a cloth and remove the regulator handle and plate.

HINT:

At the time of reassembly, please refer to the following item.

With door window fully closed, install the plate and regulator handle with the snap ring.

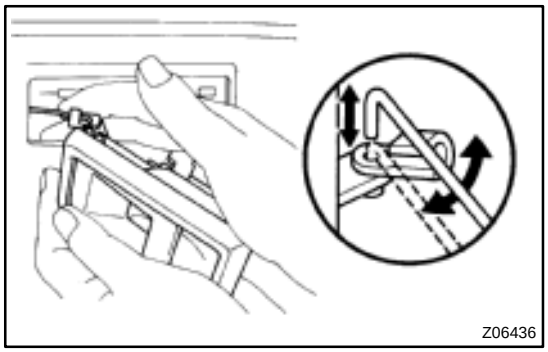

2. REMOVE DOOR INSIDE HANDLE

(a) Remove the screw and slide the handle forward.

(b) Disconnect the handle from the control link and remove the handle.

3. REMOVE INNER COVER

Using a screwdriver, remove the inner cover.

HINT:

Tape the screwdriver tip before use.

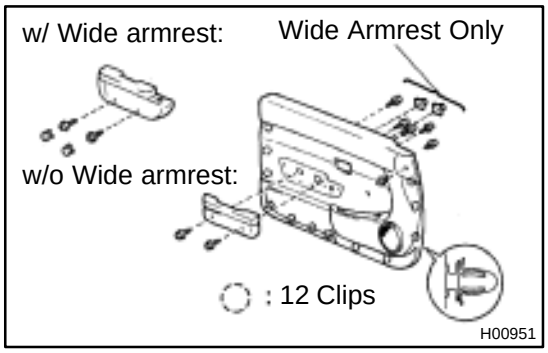

4. w/o Power window:
REMOVE DOOR TRIM

(a) Remove the clip.

(b) w/ Wide armrest:
Remove the 2 caps and 2 screws from the armrest.

(c) Insert a screwdriver between the retainer and door trim to pry it loose.

NOTICE:

Be careful not to damage the door and door trim.

HINT:

Tape the screwdriver tip before use.

(d) Pull the trim upward to remove it.

(e) w/ Wide armrest:
Remove the 5 screws and armrest.

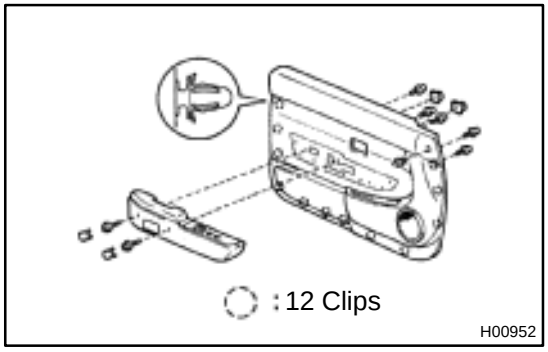

5. w/ Power window:
REMOVE DOOR TRIM

(a) Remove the clip.

(b) Remove the armrest panel by pulling upward, then disconnect the connectors.

(c) Remove the 2 caps and 2 screws.

(d) Insert a screwdriver between the retainer and door trim to pry it loose.

NOTICE:

Be careful not to damage the door and door trim.

HINT:
Tape the screwdriver tip before use.
(e) Pull the trim upward to remove it.
(f) Remove the 5 screws and armrest.

6. REMOVE DOOR SPEAKER
(a) Disconnect the connector.
(b) Remove the 5 screws and speaker.

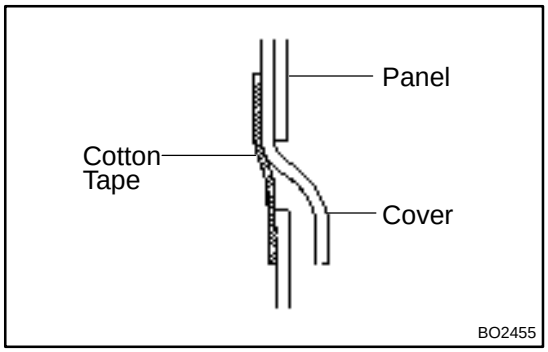

7. REMOVE SERVICE HOLE COVER
(a) Remove the 2 grommets.
(b) Remove the service hole cover.
HINT:
At the time of reassembly, please refer to the following item.
Bring out the link and connector through the service hole cover.

8. REMOVE OUTER REAR VIEW MIRROR
(a) w/ Remote control:
Disconnect the connector.
(b) Remove the 3 bolts and outer rear view mirror.

9. REMOVE OUTER WEATHERSTRIP

10. REMOVE GLASS RUN

11. REMOVE FRONT LOWER FRAME
Remove the bolt, nut and front lower frame.

12. REMOVE DOOR GLASS
HINT:
Insert a shop rag inside the door panel to prevent scratching the glass.
(a) Open the door glass until the nuts appear in the service hole.
(b) Remove the 2 bolts and door glass.

NOTICE:
Do not damage the door glass.
HINT:
Pull the glass upward to remove it.

13. REMOVE REAR LOWER FRAME
Remove the bolt, nut, and rear lower frame.

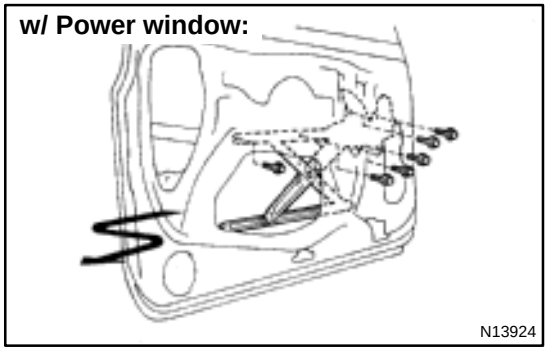

14. REMOVE WINDOW REGULATOR
(a) w/o Power window:
Remove the 5 bolts and regulator.
Torque: 4.9 N·m (50 kgf·cm, 43 in.·lbf)
(b) w/ Power window:
Disconnect the connector, then remove the 6 bolts and window regulator.
Torque: 4.9 N·m (50 kgf·cm, 43 in.·lbf)

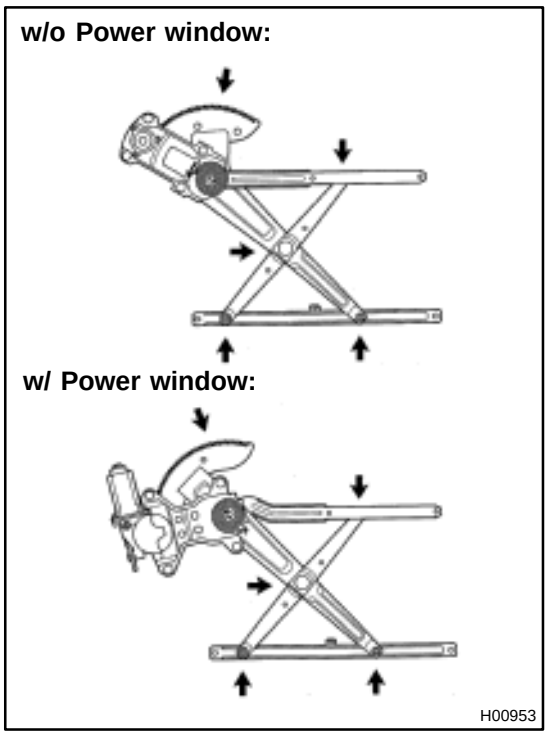

HINT:
At the time of reassembly, please refer to following item.
Apply MP grease to the window regulator rollers.
NOTICE:
At the time of reassembly, please refer to the following item.
Do not apply grease to the spring of the window regulator.

15. REMOVE DOOR LOCK

(a) Disconnect the 2 links from the outside handle.
(b) w/ Power door lock:
Disconnect the connector.
(c) Remove the 3 screws and door lock.

HINT:
At the time of reassembly, please refer to following items.

- Apply adhesive to the 3 screws.
Part No.08833–00070, THREE BOND 1324 or equivalent

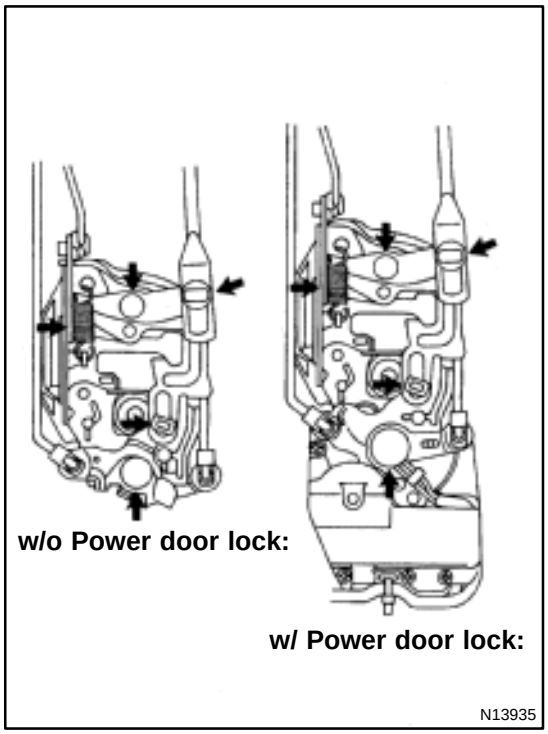

- Apply MP grease to the sliding and rotating parts of the door lock.

16. REMOVE OUTSIDE HANDLE

(a) Remove the 2 bolts.
Torque: 4.9 N·m (50 kgf·cm, 43 in.·lbf)
(b) Remove the lock cylinder.

BO073–01

REASSEMBLY

Reassembly is in the reverse order of disassembly (See page BO–9).

FRONT SEAT (Separate Type)

BO087–02

COMPONENTS

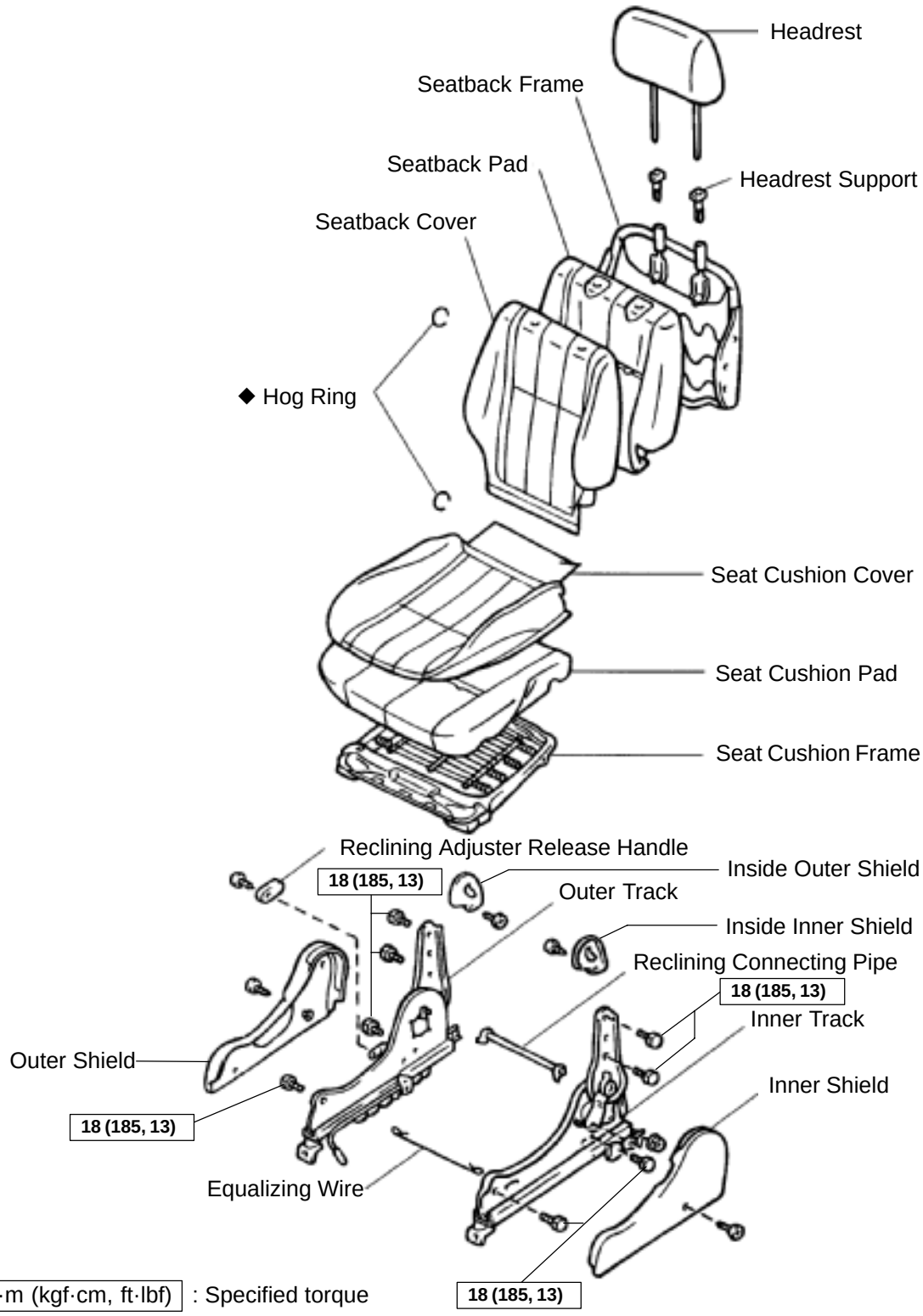

N·m (kgf·cm, ft·lbf) : Specified torque

◆ Non–reusable part

H02318

BO089–02

DISASSEMBLY

1. REMOVE HEADREST

2. REMOVE RECLINING ADJUSTER RELEASE HANDLE

3. REMOVE OUTER SHIELD

Remove the screw and outer shield.

4. REMOVE INNER SHIELD

Remove the screw and inner shield.

5. REMOVE SEATBACK ASSEMBLY

(a) Remove the hog rings.

(b) Remove the 4 bolts and seatback assembly.

6. REMOVE SEATBACK COVER

(a) Remove the headrest supports.

(b) Remove the seatback frame from the seatback cover with pad.

(c) Remove the hog rings and seatback cover from the seatback pad.

7. REMOVE SEAT CUSHION ASSEMBLY

Remove the 4 bolts and seat cushion assembly.

8. REMOVE SEAT CUSHION COVER

(a) Remove the hog rings and seat cushion frame from the seat cushion cover with pad.

(b) Remove the hog rings and seat cushion cover from the seat cushion pad.

9. REMOVE RECLINING CONNECTING PIPE

Remove the reclining connecting pipe from the seat tracks.

10. REMOVE INSIDE INNER SHIELD

Remove the screw and inside inner shield.

11. REMOVE INSIDE OUTER SHIELD

Remove the screw and inside outer shield.

12. REMOVE EQUALIZING WIRE

BO08A–01

INSPECTION

INSPECT RECLINING LOCK POSITION AND SLIDING LOCK POSITION SLIPPING OFF

(a) When reclining the seat, inspect that the outer and inner tracks are released at the same time.

HINT:

When the reclining lock positions slip off, disassemble the seat to adjust the position.

(b) When sliding the seat, inspect that the outer and inner tracks are locked at the same time.

HINT:

When sliding lock positions slip off, loosen the bolts to adjust the position.

BO08C–02

INSTALLATION

INSTALL FRONT SEAT

(a) Slide the front seat to the rearmost position.

NOTICE:

Make sure that seat adjuster locks.

(b) Without holding the seat track handle, mount the seat to the vehicle.

HINT:

If holding the seat track handle, the adjusted rearmost positions slip off.

(c) Tighten the bolts on the front side temporarily, from the bolt on the outer side tighten completely.
Torque: 37 N·m (375 kgf·cm, 27 ft·lbf)

(d) Slide the seat to the frontmost position to install the bolts on the rear side.
Torque: 37 N·m (375 kgf·cm, 27 ft·lbf)

(e) Install the 2 seat track covers.

BO08B–02

REASSEMBLY

1. INSTALL EQUALIZING WIRE

2. INSTALL INSIDE OUTER SHIELD

Install the inside outer shield with the screw.

3. INSTALL INSIDE INNER SHIELD

Install the inside inner shield withe the screw.

4. INSTALL RECLINING CONNECTING PIPE

(a) Adjust the reclining lock positions of the seat tracks.

(b) Slide the seat track to the most front position.

(c) Place the seat track on a spacer to adjust the seat rails in parallel and install the connecting pipe.

HINT:

When installing the connecting pipe while raising up the seat tracks, the lock positions adjusted in 4–(a) step slip off then lock error will occur.

5. INSTALL SEATBACK COVER

(a) Install the seatback cover with new hog rings to the seatback pad.

HINT:

When installing the hog rings, take care to prevent wrinkles as little as possible.

(b) Install the seatback cover with pad to the seatback frame.

(c) Install the headrest supports.

6. INSTALL SEATBACK ASSEMBLY

Install the seatback assembly with 4 bolts.

Torque: 18 N·m (185 kgf·cm, 13 ft·lbf)

HINT:

Tighten the 4 bolts temporarily, then from the bolt on the front right side tighten completely.

7. INSTALL SEAT CUSHION COVER

(a) Install the seat cushion cover with new hog rings to the seat cushion pad.

HINT:

When installing the hog rings, take care to prevent wrinkles as little as possible.

(b) Install the seat cushion cover with pad to the seat cushion frame.

8. INSTALL SEAT CUSHION ASSEMBLY

Install the seat cushion assembly with 4 bolts to the seat track.

Torque: 18 N·m (185 kgf·cm, 13 ft·lbf)

HINT:

Tighten the 4 bolts temporarily, then from the bolts on the rear side tighten completely.

9. INSTALL INNER SHIELD

Install the inner shield with the screw.

10. INSTALL OUTER SHIELD

Install the outer shield with the screw.

11. INSTALL RECLINING ADJUSTER RELEASE HANDLE

12. INSTALL HEADREST

BO088–01

REMOVAL

REMOVE FRONT SEAT

(a) Using a screwdriver, remove the 2 seat track covers.

HINT:

Tape the screwdriver tip before use.

(b) Remove the 4 bolts and front seat.

NOTICE:

Be careful not to damage the body.

FRONT SEAT (Split Bench Type)

BO08P–02

COMPONENTS

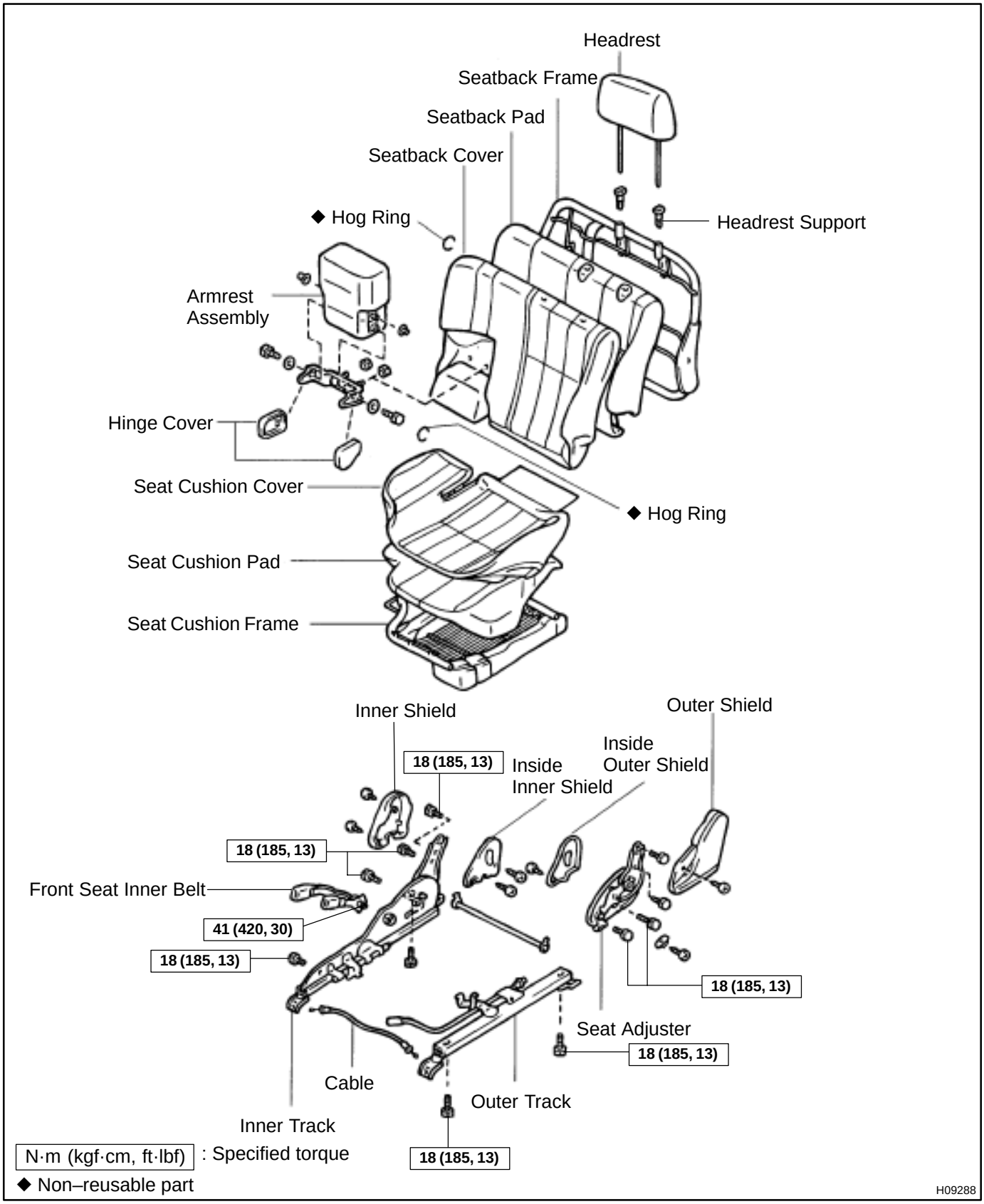

DISASSEMBLY

1. REMOVE HEADREST

2. REMOVE RECLINING ADJUSTER RELEASE HANDLE

3. REMOVE OUTER SHIELD

Remove the screw and outer shield.

4. REMOVE INNER SHIELD

Remove the screw and inner shield.

5. REMOVE SEATBACK ASSEMBLY

(a) Remove the hog rings.

(b) Remove the 4 bolts and seatback assembly.

6. REMOVE ARMREST ASSEMBLY

(a) Remove the 2 nuts and armrest assembly from the seatback assembly.

(b) Remove the 2 hinge covers.

(c) Remove the 2 bolts, 2 spacers and armrest hinge.

7. REMOVE SEATBACK COVER

(a) Remove the headrest supports.

(b) Remove the seatback frame from the seatback cover with pad.

(c) Remove the hog rings and seatback cover from the seatback pad.

8. REMOVE SEAT CUSHION ASSEMBLY

Remove the 4 bolts and seat cushion assembly.

9. REMOVE SEAT CUSHION COVER

(a) Remove the hog rings and seat cushion frame from the seat cushion cover with pad.

(b) Remove the hog rings and seat cushion cover from the seat cushion pad.

10. REMOVE RECLINING CONNECTING PIPE

Remove the reclining connecting pipe from the seat tracks.

11. REMOVE INSIDE INNER SHIELD

Remove the screw and inside inner shield.

12. REMOVE INSIDE OUTER SHIELD

Remove the screw and inside outer shield.

13. REMOVE CABLE

14. REMOVE SEAT ADJUSTER

Remove the 2 bolts and seat adjuster.

15. REMOVE FRONT SEAT INNER BELT

Unfasten the bolt and remove the front seat inner belt.

BO08S–01

INSPECTION

INSPECT RECLINING LOCK POSITION AND SLIDING LOCK POSITION SLIPPING OFF

(a) When reclining the seat, inspect that the outer and inner tracks are released at the same time.

HINT:

When the reclining lock positions slip off, disassemble the seat to adjust the position.

(b) When sliding the seat, inspect that the outer and inner tracks are locked at the same time.

HINT:

When sliding lock positions slip off, loosen the bolts to adjust the position.

BO08U–02

INSTALLATION

INSTALL FRONT SEAT

(a) Slide the front seat to the rearmost position.

NOTICE:

Make sure that seat adjuster locks.

(b) Without holding the seat track handle, mount the seat to the vehicle.

HINT:

If holding the seat track handle, the adjusted rearmost positions slip off.

(c) Tighten the bolts on the front side temporarily, from the bolt on the outer side tighten completely.
Torque: 37 N·m (375 kgf·cm, 27 ft·lbf)

(d) Slide the seat to the frontmost position to install the bolts on the rear side.
Torque: 37 N·m (375 kgf·cm, 27 ft·lbf)

(e) Install the 2 seat track covers.

REASSEMBLY

1. INSTALL FRONT SEAT INNER BELT

Install the front seat inner belt with the nut to the inner track.

Torque: 41 N·m (420 kgf·cm, 30 ft·lbf)

2. INSTALL SEAT ADJUSTER

Install the seat adjuster with the 2 bolts.

Torque: 18 N·m (185 kgf·cm, 13 ft·lbf)

3. INSTALL CABLE

4. INSTALL INSIDE OUTER SHIELD

Install the inside outer shield with the screw.

5. INSTALL INSIDE INNER SHIELD

Install the inside inner shield withe the screw.

6. INSTALL RECLINING CONNECTING PIPE

(a) Adjust the reclining lock positions of the seat tracks.

(b) Slide the seat track to the most front position.

(c) Place the seat track on a spacer to adjust the seat rails in parallel and install the connecting pipe.

HINT:

When installing the connecting pipe while raising up the seat tracks, the lock positions adjusted in 6–(a) step slip off then lock error will occur.

7. INSTALL SEATBACK COVER

(a) Install the seatback cover with new hog rings to the seatback pad.

HINT:

When installing the hog rings, take care to prevent wrinkles as little as possible.

(b) Install the seatback cover with pad to the seatback frame.

(c) Install the headrest supports.

8. INSTALL ARMREST ASSEMBLY

(a) Install the 2 spacers and armrest hinge with the 2 bolts to armrest assembly.

(b) Install the 2 hinge covers.

(c) Install the armrest assembly with 2 nuts to seatback assembly.

9. INSTALL SEATBACK ASSEMBLY

(a) Install the seatback assembly with 4 bolts.

Torque: 18 N·m (185 kgf·cm, 13 ft·lbf)

HINT:

Tighten the 4 bolts temporarily, then from the bolt on the front right side tighten completely.

(b) Install new hog rings.

HINT:

When installing the hog rings, take care to prevent wrinkles as little as possible.

10. INSTALL SEAT CUSHION COVER

(a) Install the seat cushion cover with new hog rings to the seat cushion pad.

HINT:

When installing the hog rings, take care to prevent wrinkles as little as possible.

(b) Install the seat cushion cover with pad and new hog rings to the seat cushion frame.

HINT:

When installing the hog rings, take care to prevent wrinkles as little as possible.

11. INSTALL SEAT CUSHION ASSEMBLY

Install the seat cushion assembly with 4 bolts to the seat track.

Torque: 18 N·m (185 kgf·cm, 13 ft·lbf)

HINT:

Tighten the 4 bolts temporarily, then from the bolts on the rear side tighten completely.

12. INSTALL INNER SHIELD

Install the inner shield with the screw.

13. INSTALL OUTER SHIELD

Install the inner outer shield with the screw.

14. INSTALL RECLINING ADJUSTER RELEASE HANDLE

15. INSTALL HEADREST

BO08Q–01

REMOVAL

REMOVE FRONT SEAT

(a) Using a screwdriver, remove the 2 seat track covers.

HINT:

Tape the screwdriver tip before use.

(b) Remove the 4 bolts and front seat.

NOTICE:

Be careful not to damage the body.

FRONT SEAT (Sports Type)

COMPONENTS

BO08D–02

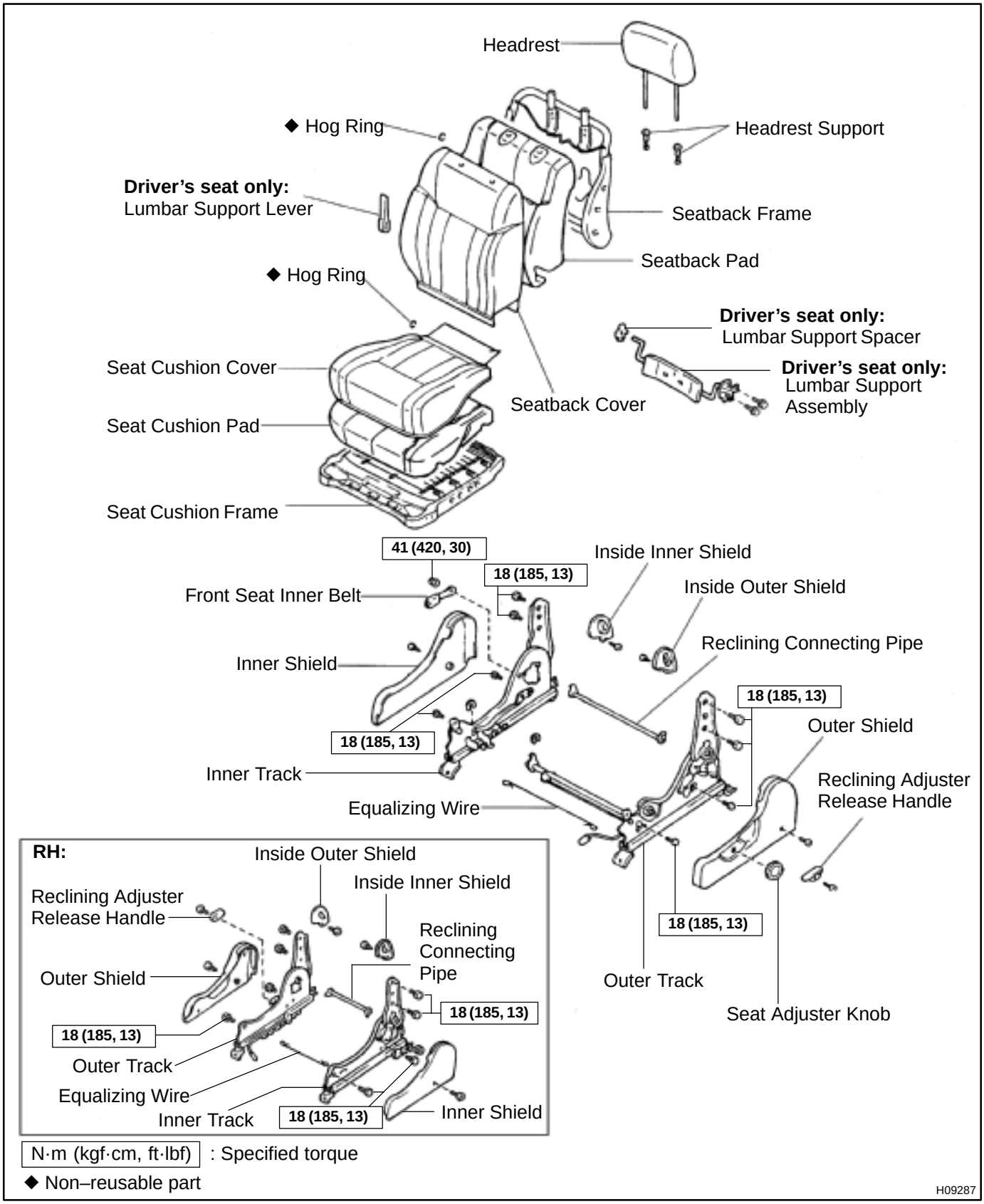

BO08F–02

DISASSEMBLY

1. REMOVE HEADREST

2. REMOVE RECLINING ADJUSTER RELEASE HANDLE

3. REMOVE SEAT ADJUSTER KNOB

4. REMOVE OUTER SHIELD

Remove the screw and outer shield.

5. REMOVE INNER SHIELD

Remove the screw and inner shield.

6. REMOVE SEATBACK ASSEMBLY

(a) Remove the hog rings.

(b) Remove the 4 bolts and seatback assembly.

7. REMOVE SEATBACK COVER

(a) Remove the headrest supports.

(b) Driver's seat:
Remove the lumber support lever.

(c) Remove the seatback frame from the seatback cover with pad.

(d) Driver's seat:
Remove the 2 bolts, lumber support assembly and spacer.

(e) Remove the hog rings and seatback cover from the seatback pad.

8. REMOVE SEAT CUSHION ASSEMBLY

Remove the 4 bolts and seat cushion assembly.

9. REMOVE SEAT CUSHION COVER

(a) Remove the seat cushion frame from the seat cushion cover with pad.

(b) Remove the hog rings and seat cushion cover from the seat cushion pad.

10. REMOVE RECLINING CONNECTING PIPE

Remove the reclining connecting pipe from the seat tracks.

11. REMOVE INSIDE INNER SHIELD

Remove the screw and inside inner shield.

12. REMOVE INSIDE OUTER SHIELD

Remove the screw and inside outer shield.

13. REMOVE EQUALIZING WIRE

14. REMOVE FRONT SEAT INNER BELT

Remove the nut and front seat inner belt.

BO08G–01

INSPECTION

INSPECT RECLINING LOCK POSITION AND SLIDING LOCK POSITION SLIPPING OFF

(a) When reclining the seat, inspect that the outer and inner tracks are released at the same time.

HINT:

When the reclining lock positions slip off, disassemble the seat to adjust the position.

(b) When sliding the seat, inspect that the outer and inner tracks are locked at the same time.

HINT:

When sliding lock positions slip off, loosen the bolts to adjust the position.

BO08I–02

INSTALLATION

INSTALL FRONT SEAT

(a) Slide the front seat to the rearmost position.

NOTICE:

Make sure that seat adjuster locks.

(b) Without holding the seat track handle, mount the seat to the vehicle.

HINT:

If holding the seat track handle, the adjusted rearmost positions slip off.

(c) Tighten the bolts on the front side temporarily, from the bolt on the outer side tighten completely.
Torque: 37 N·m (375 kgf·cm, 27 ft·lbf)

(d) Slide the seat to the frontmost position to install the bolts on the rear side.
Torque: 37 N·m (375 kgf·cm, 27 ft·lbf)

(e) Install the 2 seat track covers.

BO08H–02

REASSEMBLY

1. INSTALL FRONT SEAT INNER BELT

Install the front seat inner belt with the nut to the inner track.

Torque: 41 N·m (420 kgf·cm, 30 ft·lbf)

2. INSTALL EQUALIZING WIRE

3. INSTALL INSIDE OUTER SHIELD

Install the inside outer shield with the screw.

4. INSTALL INSIDE INNER SHIELD

Install the inside inner shield withe the screw.

5. INSTALL RECLINING CONNECTING PIPE

(a) Adjust the reclining lock positions of the seat tracks.

(b) Slide the seat track to the most front position.

(c) Place the seat track on a spacer to adjust the seat rails in parallel and install the connecting pipe.

HINT:

When installing the connecting pipe while raising up the seat tracks, the lock positions adjusted in 5–(a) step slip off then lock error will occur.

6. INSTALL SEATBACK COVER

(a) Install the seatback cover with new hog rings to the seatback pad.

HINT:

When installing the hog rings, take care to prevent winkles as little as possible.

(b) Driver's seat:
Install the lumber support assembly and spacer with the 2 bolts.

(c) Install the seatback cover with pad to the seatback frame.

(d) Driver's seat:
Install the lumber support lever.

(e) Install the headrest support.

7. INSTALL SEATBACK ASSEMBLY

Install the seat back assembly with 4 bolts.

Torque: 18 N·m (185 kgf·cm, 13 ft·lbf)

HINT:

Tighten the 4 bolts temporarily, then from the bolt on the front right side tighten completely.

8. INSTALL SEAT CUSHION COVER

(a) Install the seat cushion cover with new hog rings to the seat cushion pad.

HINT:

When installing the hog rings, take care to prevent winkles as little as possible.

(b) Install the seat cushion cover with pad to the seat cushion frame.

9. INSTALL SEAT CUSHION ASSEMBLY

Install the seat cushion assembly with 4 bolts to the seat track.

Torque: 18 N·m (185 kgf·cm, 13 ft·lbf)

HINT:

Tighten the 4 bolts temporarily, then from the bolts on the rear side tighten completely.

10. INSTALL INNER SHIELD

Install the inner shield with the screw.

11. INSTALL OUTER SHIELD

Install the outer shield with the screw.

12. INSTALL SEAT ADJUSTER KNOB

13. INSTALL RECLINING ADJUSTER RELEASE HANDLE

14. INSTALL HEADREST

BO08E–01

REMOVAL

REMOVE FRONT SEAT

(a) Using a screwdriver, remove the 2 seat track covers.

HINT:

Tape the screwdriver tip before use.

(b) Remove the 4 bolts and front seat.

NOTICE:

Be careful not to damage the body.

BO077–02

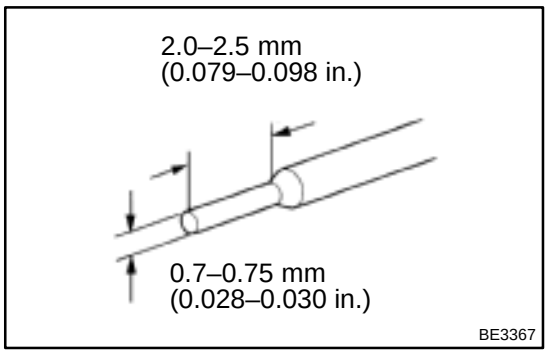

ADJUSTMENT

ADJUST WASHER NOZZLE

Using a tool like the one shown in the figure, change the direction of the nozzle hole to adjust the point where washer fluid hits the windshield.

FRONT WIPER AND WASHER

COMPONENTS

BO074–02

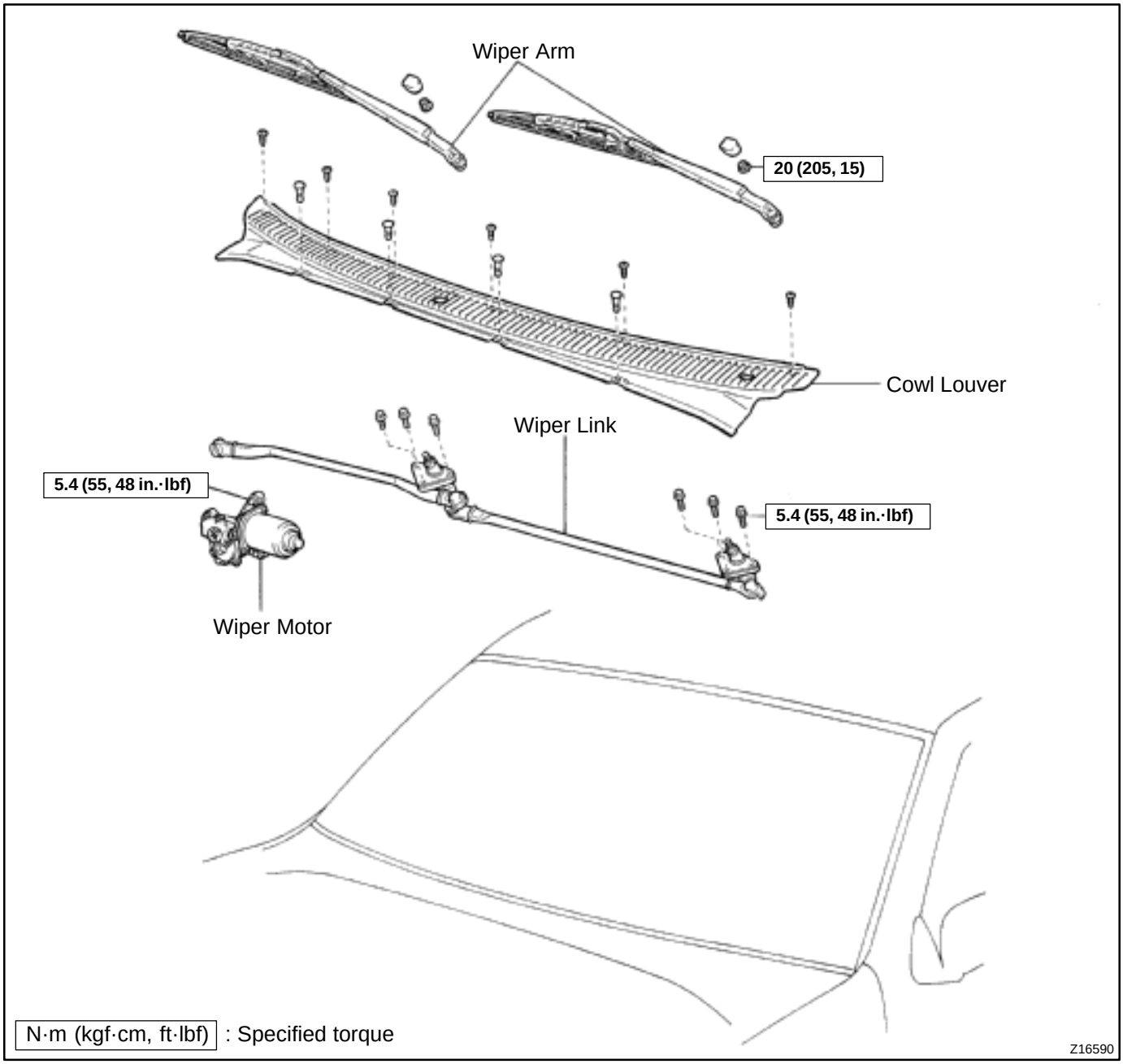

BO076–02

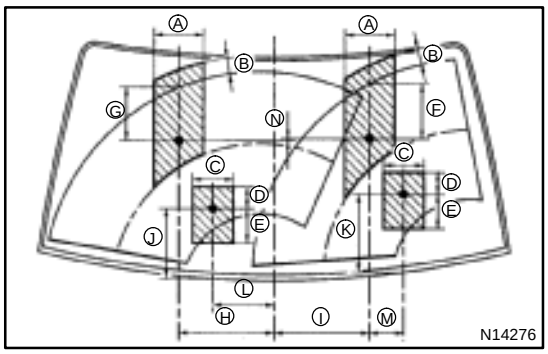

INSPECTION

INSPECT WASHER NOZZLE

While operating the washer, check that the point where the washer fluid hits the windshield and the surge area are within the range indicated by the hatched line.

A: Approx. 150 mm (5.90 in.)
B: Approx. 50 mm (1.97 in.)
C: Approx. 120 mm (4.72 in.)
D: Approx. 65 mm (2.55 in.)
E: Approx. 105 mm (4.13 in.)
F: Approx. 162 mm (6.37 in.)
G: Approx. 156 mm (6.14 in.)
H: Approx. 287.7 mm (11.32 in.)
I: Approx. 211.4 mm (8.32 in.)
J: Approx. 238.6 mm (9.39 in.)
K: Approx. 189 mm (7.44 in.)
L: Approx. 102.5 mm (4.03 in.)
M: Approx. 0 – 50 mm (0 – 1.97 in.)

BO256–01

INSTALLATION

1. INSTALL WINDOW WASHER NOZZLES

(a) Connect the washer hose.

(b) Install the washer nozzles to the hood.

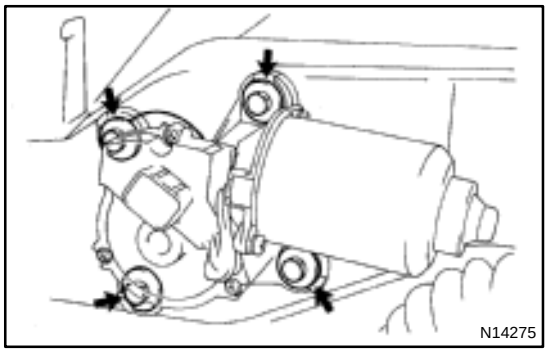
N14275

2. INSTALL WIPER MOTOR

Install the wiper motor and fasten the 4 bolts, then connect the connector.

Torque: 5.4 N·m (55 kgf·cm, 48 in.·lbf)

3. INSTALL WIPER LINK

(a) Connect the wiper link to the wiper motor.

(b) Install the 6 bolts.

Torque: 5.4 N·m (55 kgf·cm, 48 in.·lbf)

4. INSTALL COWL LOUVER

Install the cowl louver with the 6 screws and 4 clips.

5. INSTALL WIPER ARMS

(a) Operate the wipers once and turn the wiper switch OFF.

(b) Install the wiper arms and tighten nuts by hand.

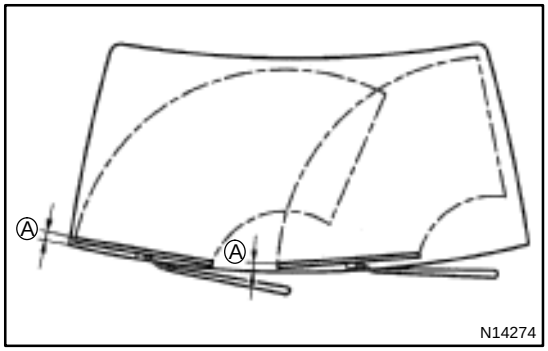

N14274

(c) Adjust the installation position of the wiper arms to the positions as shown in the illustration.

A: 25.0 mm (0.984 in.)

(d) Torque the nuts.

Torque: 20 N·m (205 kgf·cm, 15 ft·lbf)

BO075–02

REMOVAL

1. REMOVE WIPER ARMS

(a) Using a screwdriver, remove the caps.

HINT:

Tape the screwdriver tip before use.

(b) Remove the 2 nuts and wiper arms.

2. REMOVE COWL LOUVER

Remove the 6 screws, 4 clips and cowl louver.

3. REMOVE WIPER LINK

(a) Remove the 6 bolts.

(b) Disconnect the wiper link from the wiper motor.

(c) Remove the wiper link through the service hole.

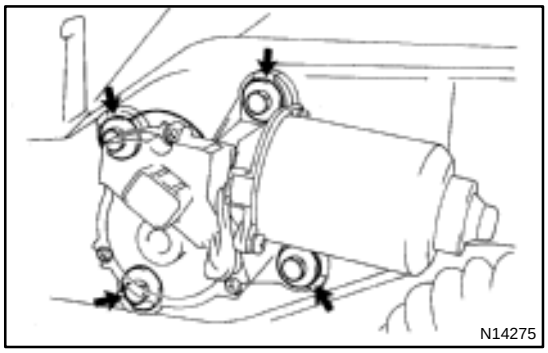

4. REMOVE WIPER MOTOR

Disconnect the connector, then unfasten the 4 bolts and remove the motor.

5. REMOVE WINDOW WASHER NOZZLES

(a) Using a screwdriver, remove the window washer nozzles from the hood.

HINT:

Tape the screwdriver tip before use.

(b) Disconnect the washer hoses.

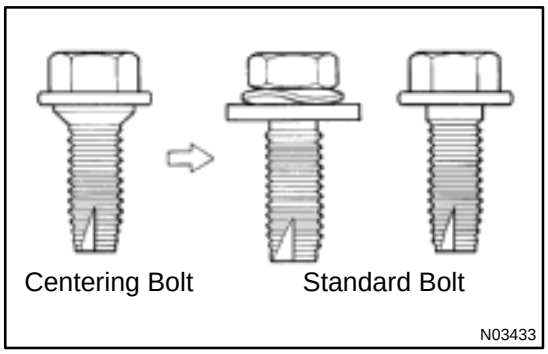

HOOD

ADJUSTMENT

BO06Z–02

HINT:

Since the centering bolt is used as the hood hinge set bolt, the hood cannot be adjusted with it on. Substitute the bolt with the washer for the centering bolt.

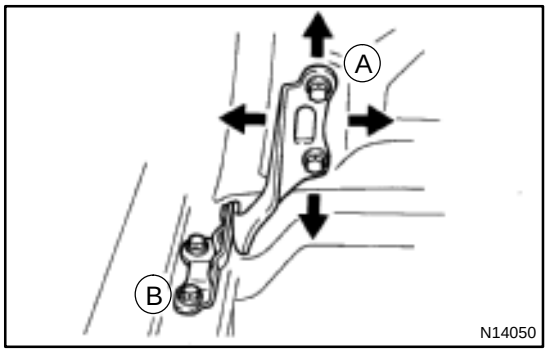

1. ADJUST HOOD IN FORWARD/ REARWARD AND LEFT/ RIGHT DIRECTIONS

Adjust the hood by loosening the hood side hinge bolts.

Torque:

A: 13 N·m (130 kgf·cm, 10 ft·lbf)

B: 18 N·m (180 kgf·cm, 13 ft·lbf)



2. ADJUST FRONT EDGE OF HOOD IN VERTICAL DIRECTION

Adjust the hood by turning the cushions.

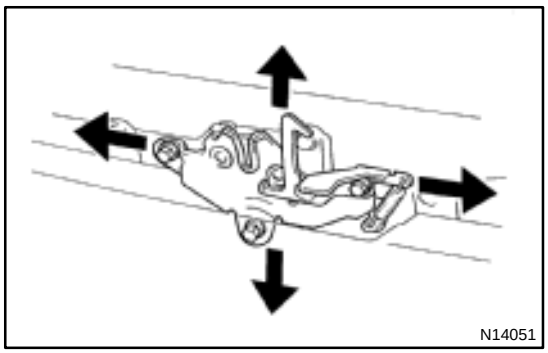

3. ADJUST HOOD LOCK

Adjust the lock by loosening the bolts.

Torque: 8.0 N·m (82 kgf·cm, 71 in.·lbf)

INSTRUMENT PANEL

BO07T–02

COMPONENTS

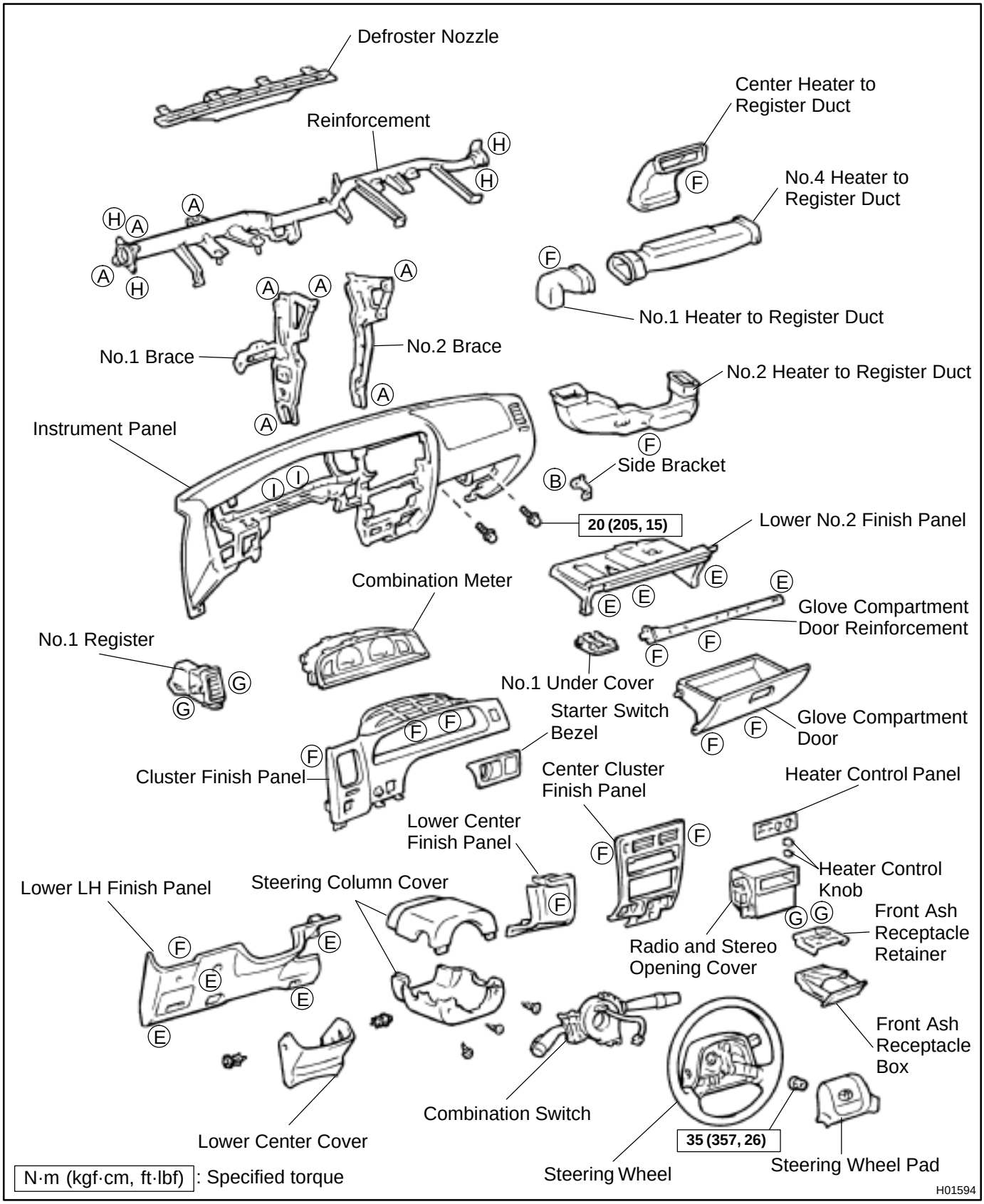

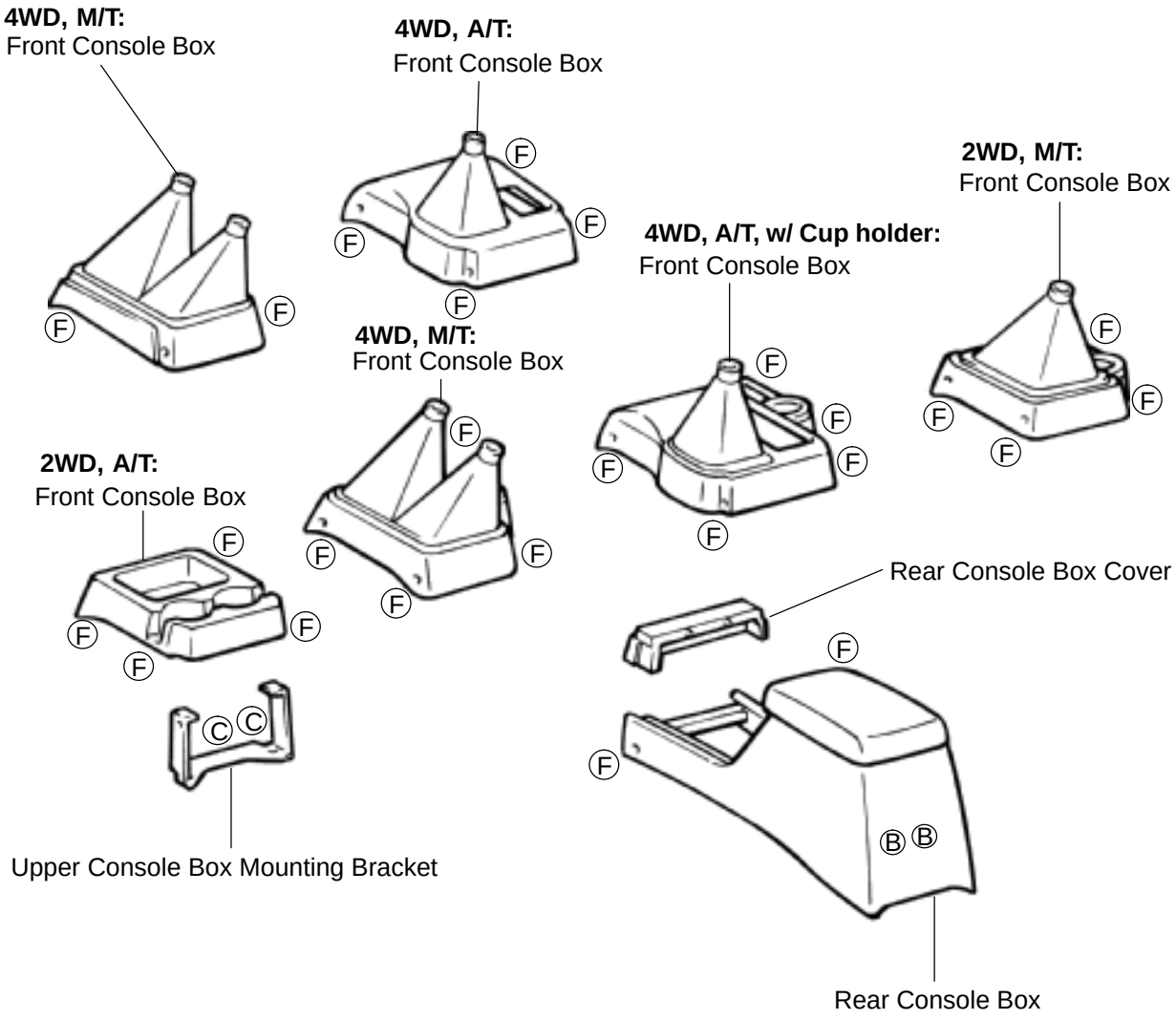
4WD, M/T:
Front Console Box
4WD, A/T:
Front Console Box
2WD, M/T:
Front Console Box
4WD, A/T, w/ Cup holder:
Front Console Box
4WD, M/T:
Front Console Box
2WD, A/T:
Front Console Box
Rear Console Box Cover
Upper Console Box Mounting Bracket
Rear Console Box
F
C
B
H01702

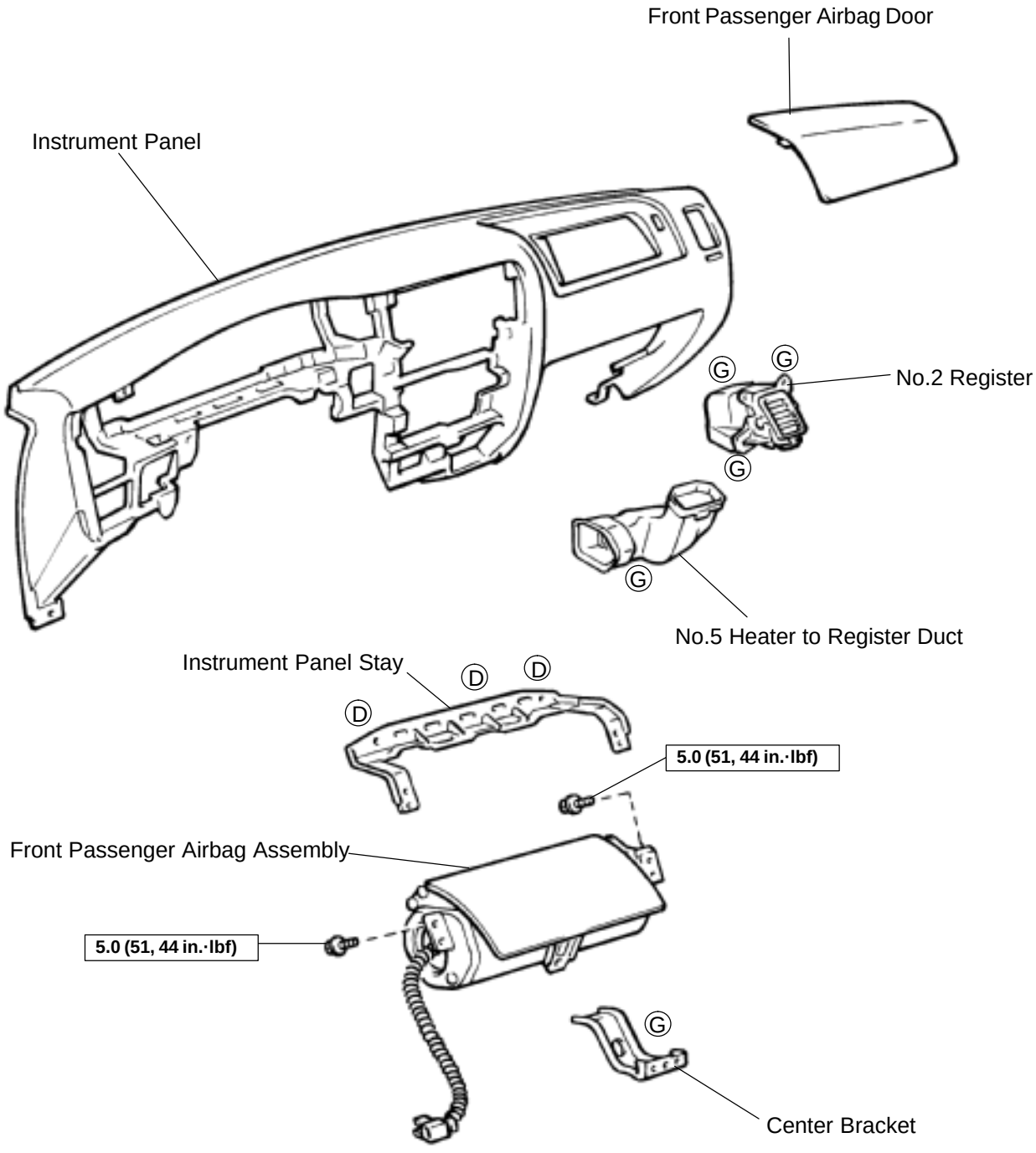

N·m (kgf·cm, ft·lbf) : Specified torque

H01595

HINT:
Screw shapes and sizes are indicated in the table below. The codes (”A” – ”I”) correspond to those indicated on the previous page.

mm (in.)

Code	Shape	Size	Code	Shape	Size	Code	Shape	Size
Ⓐ	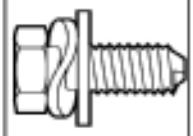	ø = 8 (0.31) L = 18 (0.71)	Ⓑ	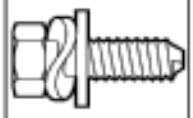	ø = 6 (0.24) L = 18 (0.71)	Ⓒ		ø = 6 (0.24) L = 16 (0.63)
Ⓓ		ø = 6 (0.24) L = 25 (0.98)	Ⓔ		ø = 6 (0.24) L = 22 (0.87)	Ⓕ		ø = 5.22 (0.21) L = 16 (0.63)
Ⓖ		ø = 5 (0.20) L = 14 (0.55)	Ⓗ		ø = 8 (0.31)	Ⓘ		ø = 6 (0.24)

T

H07735

BO07V–02

DISASSEMBLY

1. REMOVE CENTER BRACKET

Remove the screw and center bracket.

2. REMOVE NO.5 HEATER TO REGISTER DUCT

Remove the screw and No.5 heater to register duct.

3. REMOVE NO.2 REGISTER

Remove the 3 screws and No.2 register.

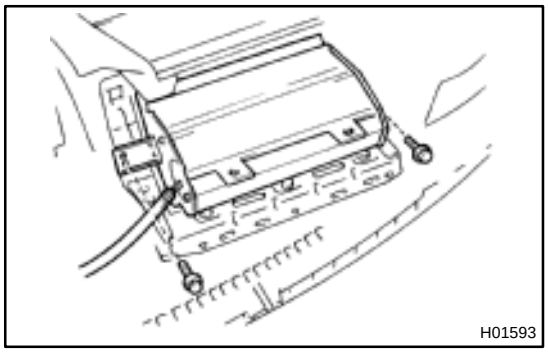

4. REMOVE FRONT PASSENGER AIRBAG ASSEMBLY

(a) Remove the 2 bolts and front passenger airbag assembly.
Torque: 5.0 N·m (51 kgf·cm, 42 in.·lbf)

(b) Remove the 3 bolts and front passenger airbag door.

(c) Remove the 3 screws and instrument panel stay.

CAUTION:

- **Do not store the front passenger airbag assembly with the airbag side deployment direction facing down.**
- **Never disassemble the front passenger airbag assembly.**

BO07X–01

INSTALLATION

Installation is in the reverse order of removal (See page BO–47).

BO07W–01

REASSEMBLY

Reassembly is in the reverse order of disassembly (See page BO–50).

BO07U–02

REMOVAL

1. REMOVE STEERING WHEEL
(See page SR–13, SR–25 or SR–33)
2. REMOVE STEERING COLUMN COVERS
3. REMOVE COMBINATION SWITCH

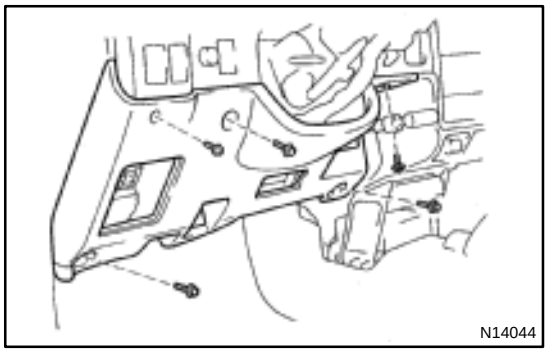
N14044

4. REMOVE LOWER LH FINISH PANEL
(a) Remove the 2 screws and hood lock release lever.
(b) Remove the fuse box opening cover.
(c) Remove the 4 bolts, screw and lower LH finish panel.
5. w/ Rear console box:
REMOVE REAR CONSOLE BOX
(a) Remove the 2 bolts, 2 screws and rear console box.
(b) Remove the rear console box cover.
6. REMOVE FRONT CONSOLE BOX (See page BO–43)
7. REMOVE UPPER CONSOLE BOX MOUNTING BRACKET
Remove the 2 screws and upper console box mounting bracket.
8. REMOVE LOWER CENTER COVER
Remove the 2 clips and lower center cover.
9. REMOVE NO.2 HEATER TO REGISTER DUCT
Remove the screw and No.2 heater to register duct.
10. REMOVE CENTER CLUSTER FINISH PANEL
(a) Remove the heater control knobs.
(b) Using a screwdriver, remove the heater control panel.
HINT:
Tape the screwdriver tip before use.

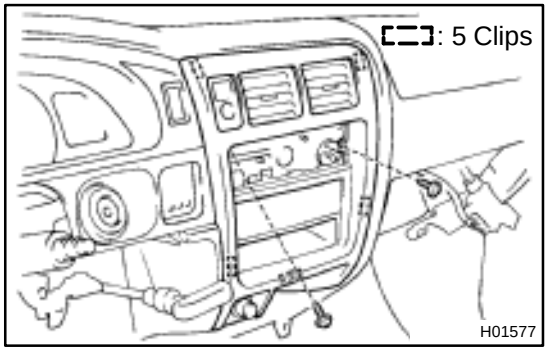

H01577

(c) Remove the 2 screws.
(d) Using a screwdriver, remove the center cluster finish panel.
HINT:
Tape the screwdriver tip before use.
(e) Disconnect the cutoff switch connectors and other connectors.
NOTICE:
When handling the switch connector, take care not to damage the cutoff wire harness.

(f) Remove the cigar lighter hole bezel from the center cluster finish panel.

(g) Remove the front ash receptacle box and retainer from the center cluster finish panel.

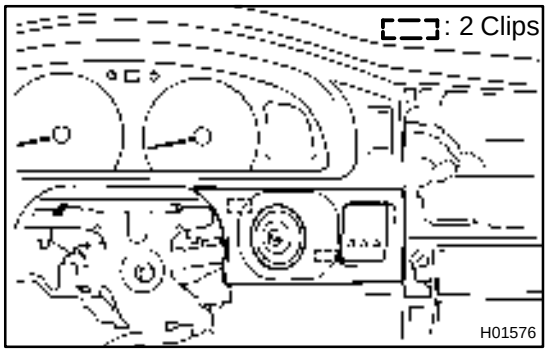

11. REMOVE STARTER SWITCH BEZEL

Using a screwdriver, remove the starter switch bezel.

HINT:

Tape the screwdriver tip before use.

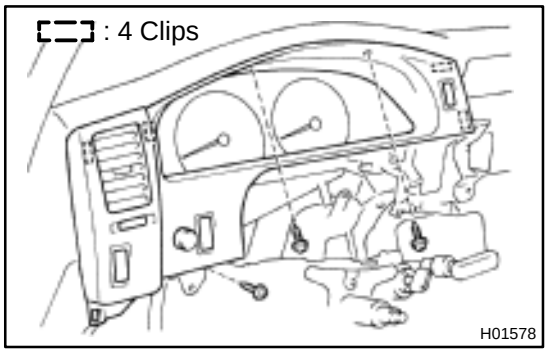

12. REMOVE CLUSTER FINISH PANEL

(a) Remove the 3 screws.

(b) Using a screwdriver, remove the cluster finish panel.

HINT:

Tape the screwdriver tip before use.

13. REMOVE RADIO AND STEREO OPENING COVER

14. REMOVE COMBINATION METER

15. REMOVE NO.1 REGISTER

Remove the 2 screws and No.1 register.

16. REMOVE NO.1 HEATER TO REGISTER DUCT

Remove the screw and No.1 heater to register duct.

17. REMOVE STEERING COLUMN

(See page SR–13, SR–25 or SR–33)

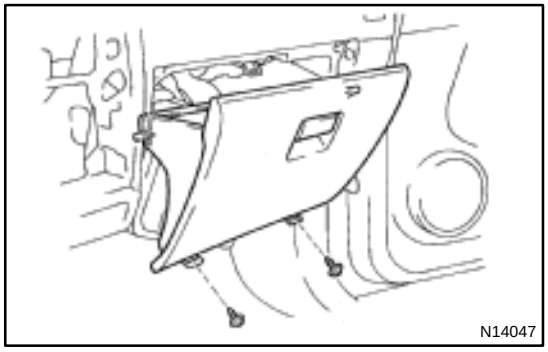

18. REMOVE GLOVE COMPARTMENT DOOR

Remove the 2 screws and glove compartment door.

19. REMOVE GLOVE COMPARTMENT DOOR REINFORCEMENT

Remove the 3 screws and glove compartment door reinforcement.

20. REMOVE NO.4 HEATER TO REGISTER DUCT

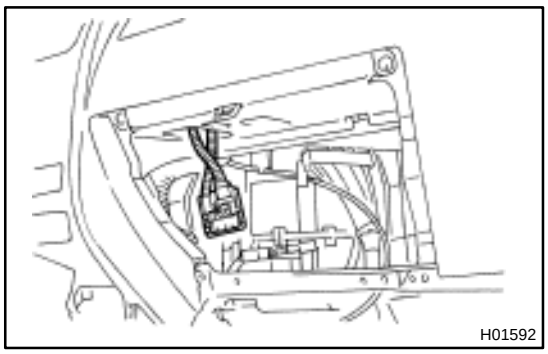

21. DISCONNECT AIRBAG CONNECTOR

(a) Remove the No.1 under cover.

NOTICE:

When handling the airbag connector, take care not to damage the airbag wire harness.

(b) Pull up and disconnect the airbag connector.

22. REMOVE LOWER NO.2 FINISH PANEL

Remove the 3 screws and lower No.2 finish panel.

23. REMOVE HEATER CONTROL INSTALLATION SCREWS

24. REMOVE LOWER CENTER FINISH PANEL

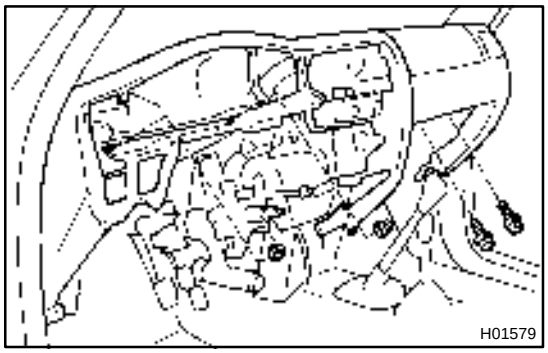

25. REMOVE INSTRUMENT PANEL

Remove the 2 bolts, 2 nuts and instrument panel.

Torque:

Bolt: 20 N·m (205 kgf·cm, 15 ft·lbf)

26. REMOVE NO.1 BRACE

Remove the 3 bolts and No.1 brace.

27. REMOVE NO.2 BRACE

Remove the 2 bolts and No.2 brace.

28. REMOVE CENTER HEATER TO REGISTER DUCT

Remove the screw and center heater to register duct.

29. REMOVE DEFROSTER NOZZLE

30. REMOVE REINFORCEMENT

Remove the 3 bolts, 4 nuts and reinforcement.

31. REMOVE SIDE BRACKET

Remove the bolt and side bracket.

QUARTER WINDOW GLASS

COMPONENTS

BO07I–02

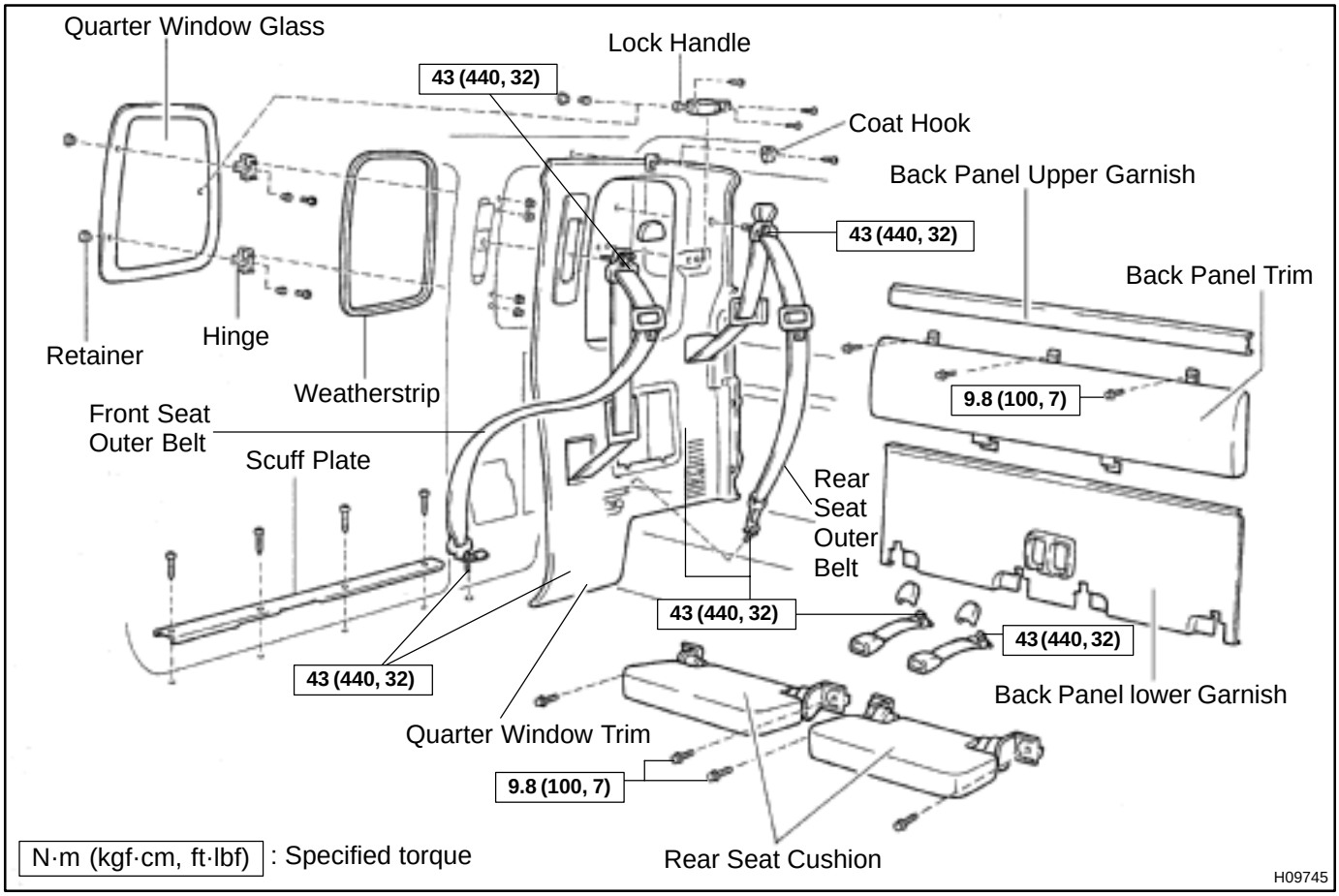

BO07K–02

INSTALLATION

Installation is in the reverse order of removal (See page BO–31).

BO07J–02

REMOVAL

1. REMOVE DOOR SCUFF PLATE

Remove the 4 screws and plate.

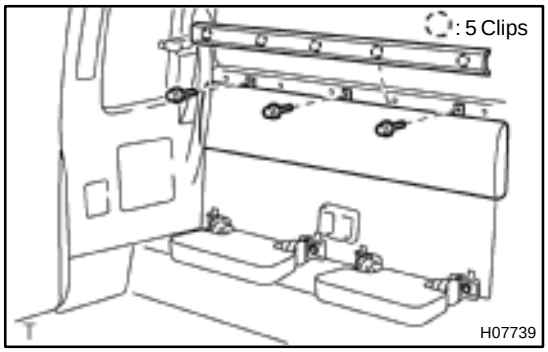

2. REMOVE BACK PANEL UPPER GARNISH AND BACK PANEL TRIM

(a) Using a screwdriver, remove the back panel upper garnish.

HINT:

Tape the screwdriver tip before use.

(b) Remove the 3 bolts and back panel trim.

Torque: 9.8 N·m (100 kgf·cm, 7 ft·lbf)

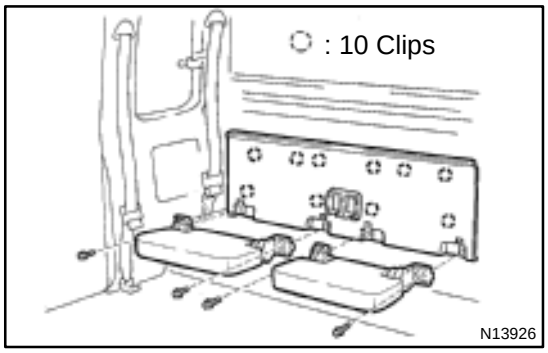

3. REMOVE BACK PANEL LOWER GARNISH

Using a screwdriver, remove the back panel lower garnish.

HINT:

Tape the screwdriver tip before use.

4. REMOVE REAR SEAT CUSHIONS

Remove the 4 bolts and rear seat cushions.

Torque: 9.8 N·m (100 kgf·cm, 7 ft·lbf)

5. REMOVE FRONT AND REAR SEAT OUTER BELT ANCHORS

Remove the 4 bolts, seat belt anchors and belt guide.

Torque: 43 N·m (440 kgf·cm, 32 ft·lbf)

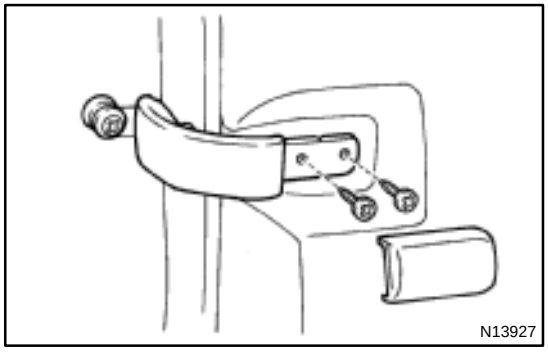

6. REMOVE LOCK HANDLE

(a) Using a screwdriver, remove the cover.

HINT:

Tape the screwdriver tip before use.

(b) Remove the 2 screws and lock handle.

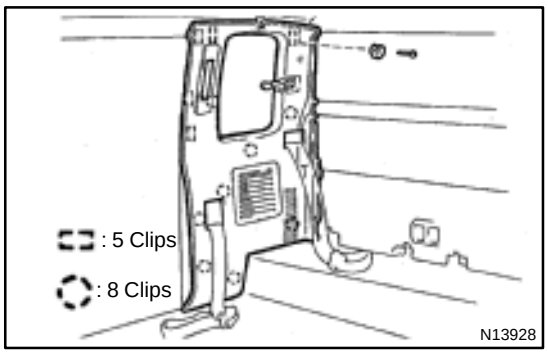

7. REMOVE QUARTER TRIM

(a) Remove the screw and coat hook.

(b) Using a screwdriver, remove the quarter trim.

NOTICE:

Paying enough attention remove the clip on the quarter trim shown in the illustration. Otherwise, the quarter trim or the front pillar garnish might be broken.

HINT:

Tape the screwdriver tip before use.

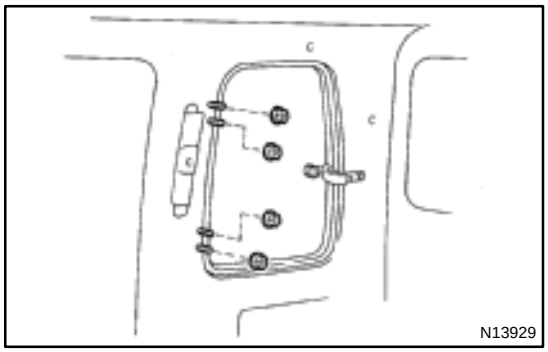

8. REMOVE QUARTER WINDOW GLASS

(a) Remove the 4 nuts and quarter window glass.

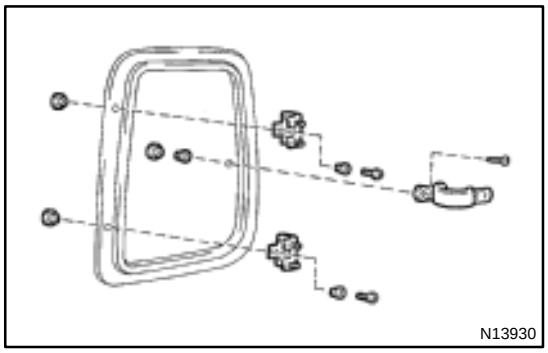

(b) Remove the lock handle from the quarter window glass.

(c) Remove the 2 hinges from the quarter window glass.

REAR SEAT

COMPONENTS

BO08V–02

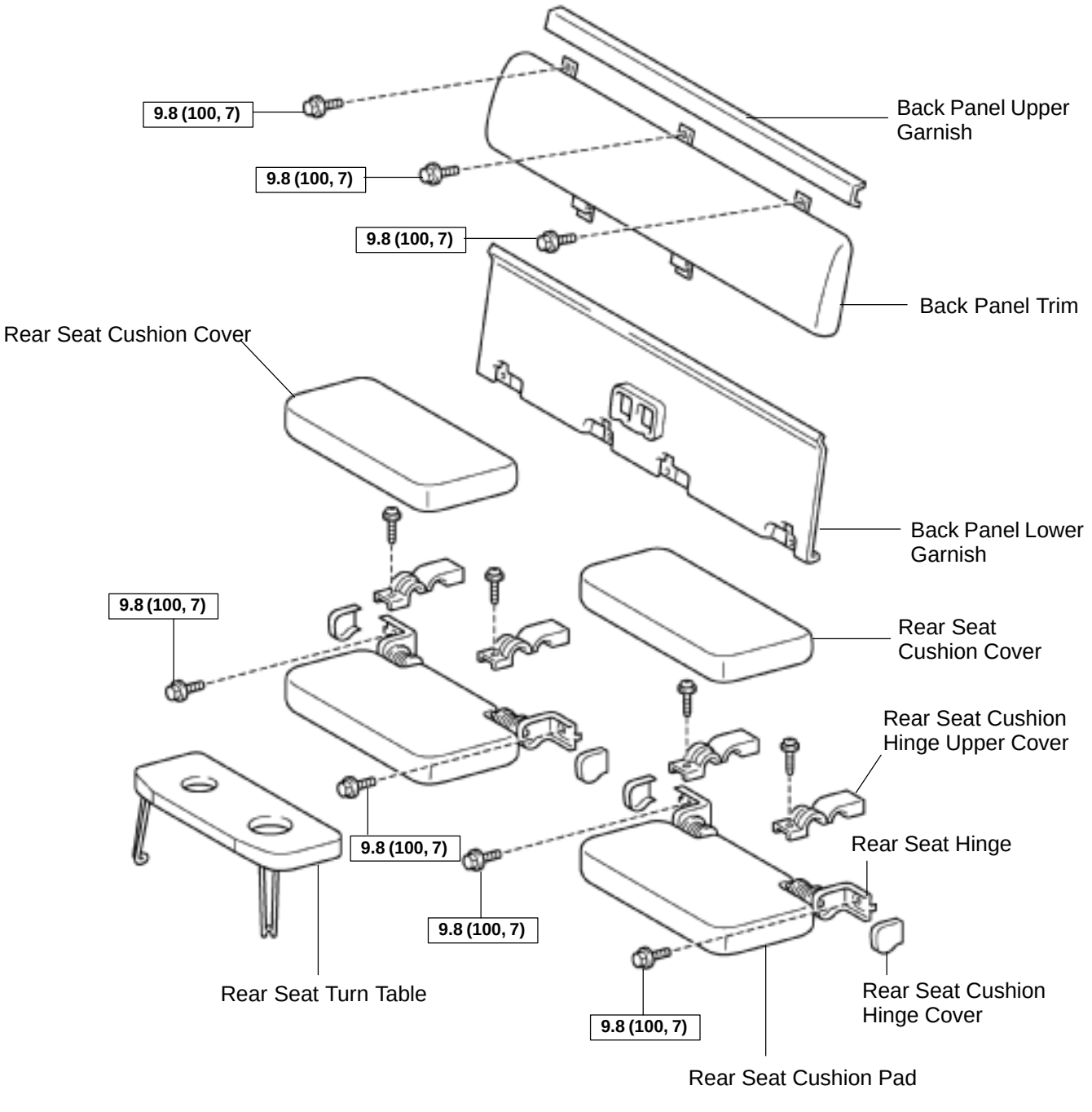

N·m (kgf·cm, ft·lbf) : Specified torque

H07738

BO08X–02

DISASSEMBLY

1. REMOVE REAR SEAT CUSHION HINGE COVERS

Using a screwdriver, remove the rear seat cushion hinge covers.

HINT:

Tape the screwdriver tip before use.

2. REMOVE REAR SEAT CUSHION HINGE UPPER COVERS

Remove the screws and rear seat cushion hinge upper covers.

3. REMOVE REAR SEAT CUSHION COVERS

Remove the rear seat cushion covers from the rear seat cushion pads.

BO257–01

INSTALLATION

1. INSTALL SEAT TURN TABLE

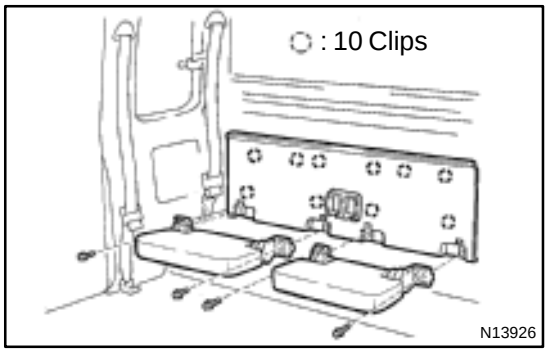

2. INSTALL REAR SEAT CUSHIONS

Install the rear seat cushions with the 4 bolts.

Torque: 9.8 N·m (100 kgf·cm, 7 ft·lbf)

3. INSTALL BACK PANEL LOWER GARNISH

Install the back panel lower garnish to the body.

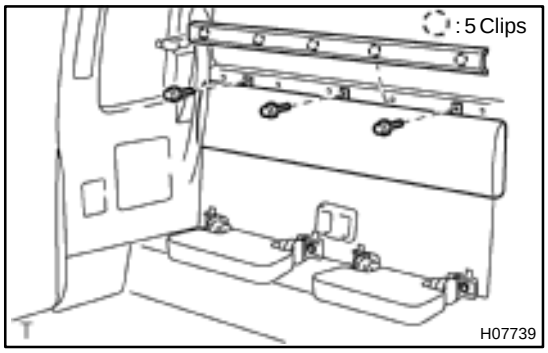

4. INSTALL BACK PANEL UPPER GARNISH AND BACK PANEL TRIM

(a) Install the trim with the 3 bolts.

Torque: 9.8 N·m (100 kgf·cm, 7 ft·lbf)

(b) Install the garnish to the body.

BO08Y–02

REASSEMBLY

1. INSTALL REAR SEAT CUSHION COVERS

Install the rear seat cushion covers to the rear seat cushion pads.

2. INSTALL REAR SEAT CUSHION HINGE UPPER COVERS

Install the rear seat cushion hinge upper covers with the screws.

3. INSTALL REAR SEAT CUSHION HINGE COVERS

Install the rear seat cushion hinge covers to the seat.

BO08W–02

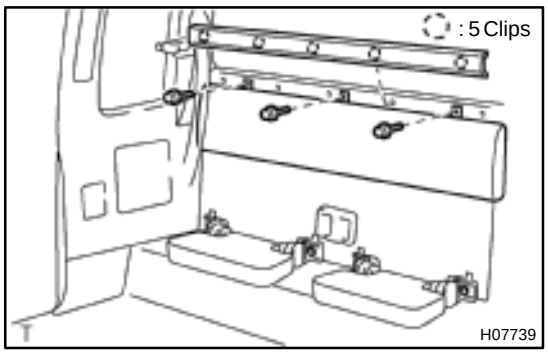

REMOVAL

1. REMOVE BACK PANEL UPPER GARNISH AND BACK PANEL TRIM

(a) Using a screwdriver, remove the garnish.

HINT:

Tape the screwdriver tip before use.

(b) Remove the 3 bolts and trim.

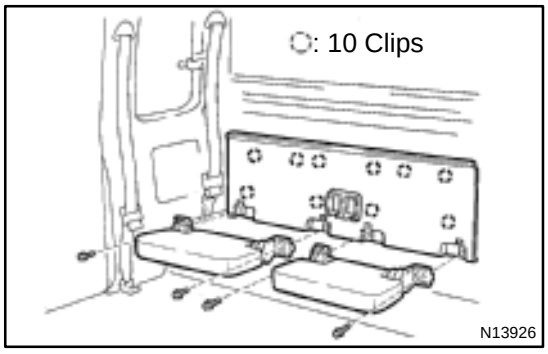

2. REMOVE BACK PANEL LOWER GARNISH

Using a screwdriver, remove the garnish.

HINT:

Tape the screwdriver tip before use.

3. REMOVE REAR SEAT CUSHIONS

Remove the 4 bolts and rear seat cushions.

4. REMOVE SEAT TURN TABLE

ROOF HEADLINING (Extra Cab)

BO084–02

COMPONENTS

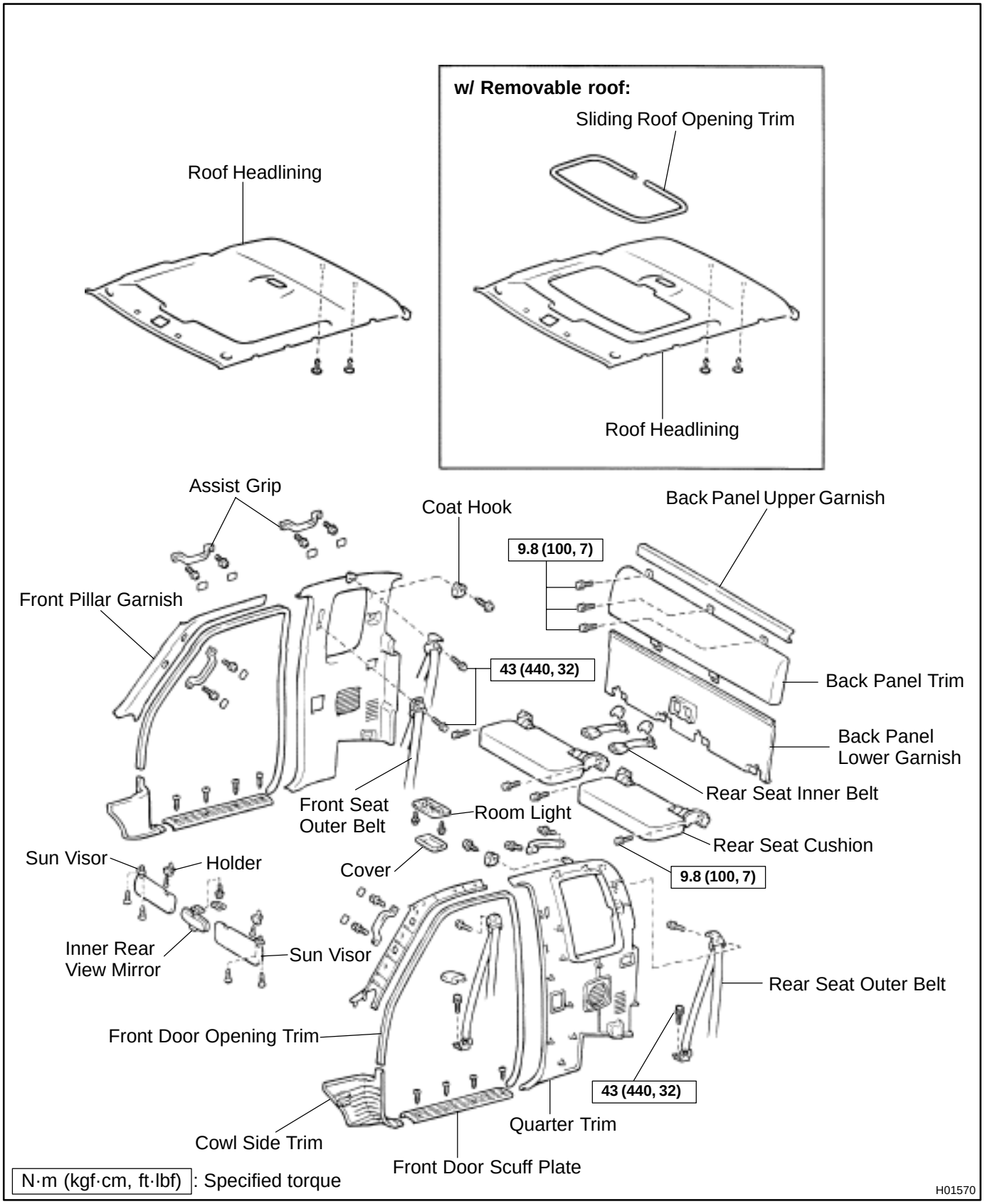

BO086–01

INSTALLATION

Installation is in the reverse order of removal (See page BO–61).

BO085–02

REMOVAL

1. w/ Removable roof:
REMOVE SUNSHADE TRIM

2. w/ Removable roof:
REMOVE REMOVABLE ROOF LOCK HANDLE AND LOCK BASE

3. w/ Removable roof:
REMOVE SLIDING ROOF OPENING TRIM

4. REMOVE ASSIST GRIPS

5. REMOVE SUN VISORS AND HOLDERS

6. REMOVE INNER REAR VIEW MIRROR

7. REMOVE ROOM LIGHT

8. REMOVE COWL SIDE TRIMS

9. REMOVE FRONT DOOR SCUFF PLATES

10. REMOVE DOOR OPENING TRIMS

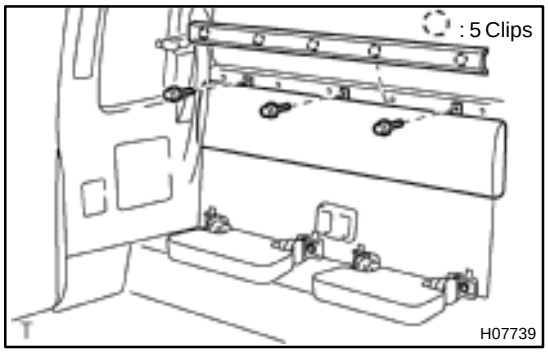

11. REMOVE BACK PANEL UPPER GARNISH AND BACK PANEL TRIM

(a) Using a screwdriver, remove the garnish.

HINT:

Tape the screwdriver tip before use.

(b) Remove the 3 bolts and trim.

Torque: 9.8 N·m (100 kgf·cm, 7 ft·lbf)

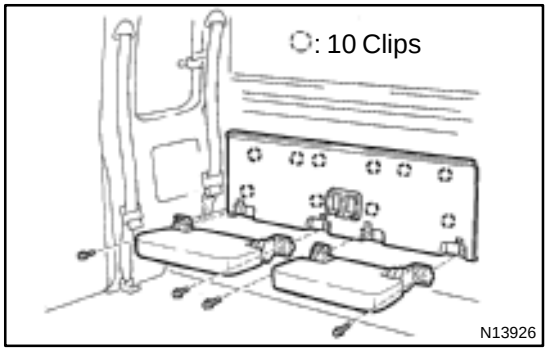

12. REMOVE BACK PANEL LOWER GARNISH

Using a screwdriver, remove the garnish.

HINT:

Tape the screwdriver tip before use.

13. REMOVE REAR SEAT CUSHIONS

Remove the 4 bolts and rear seat cushions.

Torque: 9.8 N·m (100 kgf·cm, 7 ft·lbf)

14. REMOVE FRONT AND REAR SEAT OUTER BELT SHOULDER ANCHORS

Remove the 4 bolts and outer belt shoulder anchors.

Torque: 43 N·m (440 kgf·cm, 32 ft·lbf)

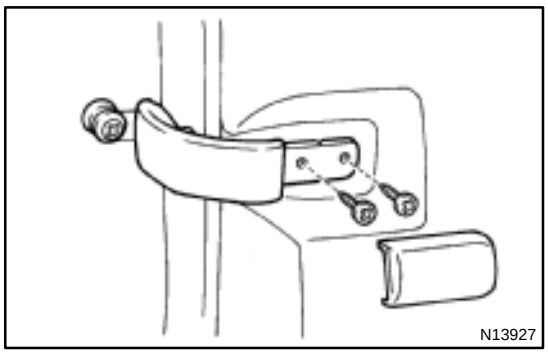

15. REMOVE LOCK HANDLE

(a) Using a screwdriver, remove the cover.

HINT:

Tape the screwdriver tip before use.

(b) Remove the 2 screws and lock handle.

(c) Employ the same manner described above to the other side.

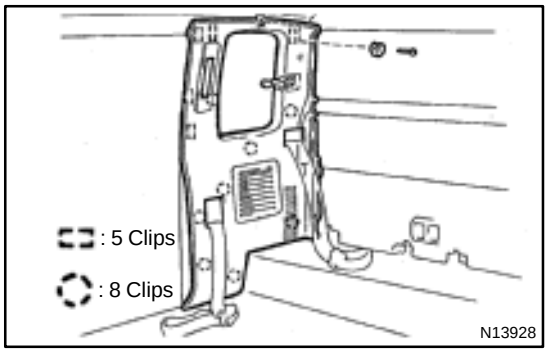

16. REMOVE QUARTER TRIM

(a) Remove the screw and coat hook.

(b) Using a screwdriver, remove the quarter trim.

HINT:

Tape the screwdriver tip before use.

NOTICE:

Paying enough attention remove the clip on the quarter trim shown in the illustration. Otherwise, the quarter trim or the front pillar garnish might be broken.

(c) Employ the same manner described above to the other side.

17. REMOVE FRONT PILLAR GARNISHES

18. REMOVE ROOF HEADLINING

(a) Using a clip remover, remove the 2 clips.

(b) Remove the roof headlining.

SEAT BELT

COMPONENTS

BO090–02

Regular cab:
Separate seat (Inner belt and outer belt):

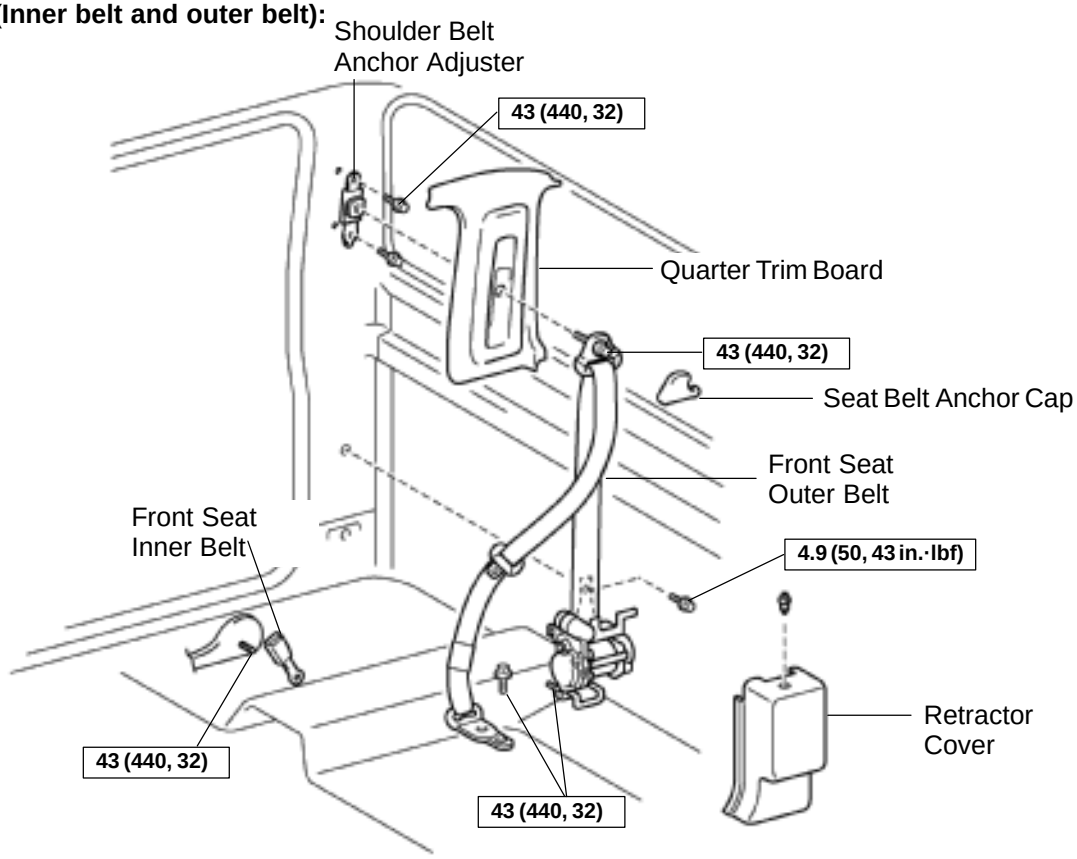

Bench seat (Inner belt):

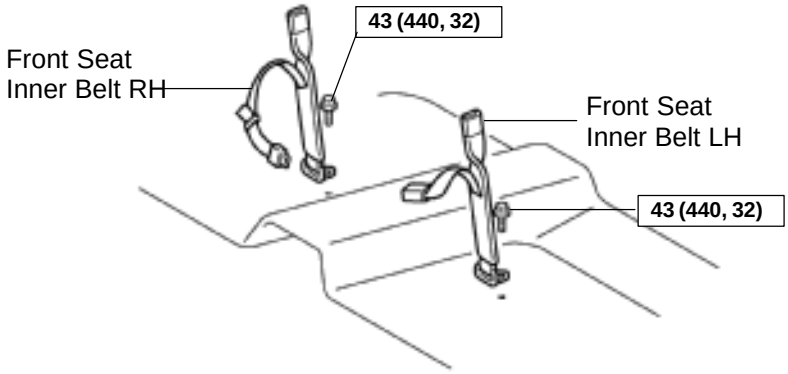

T

N·m (kgf·cm, ft·lbf) : Specified torque

H07736

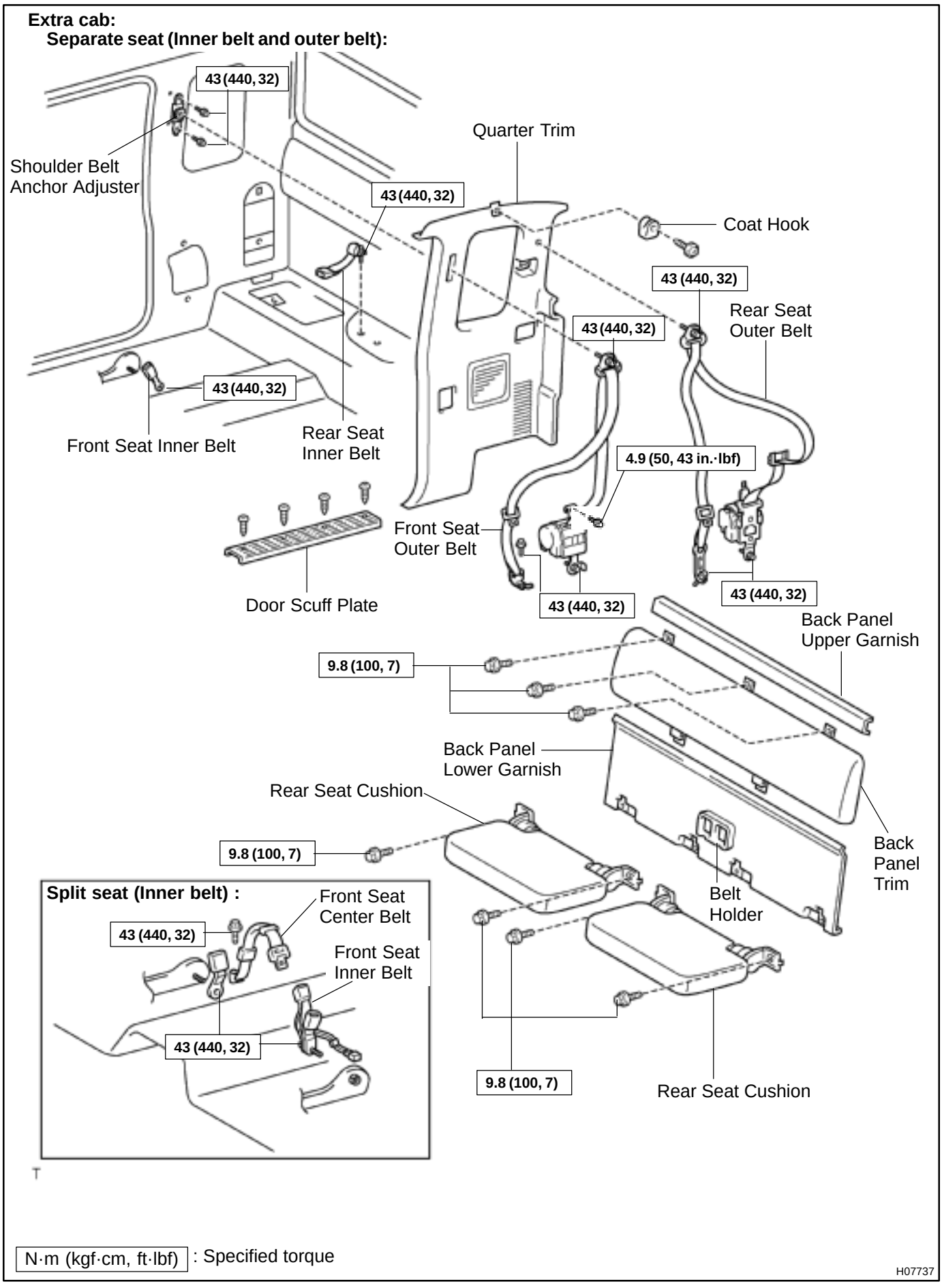
Extra cab:
Separate seat (Inner belt and outer belt):
43 (440, 32)
Shoulder Belt Anchor Adjuster
Quarter Trim
43 (440, 32)
Coat Hook
43 (440, 32)
Rear Seat Outer Belt
43 (440, 32)
43 (440, 32)
Front Seat Inner Belt
Rear Seat Inner Belt
4.9 (50, 43 in.·lbf)
Front Seat Outer Belt
Door Scuff Plate
43 (440, 32)
43 (440, 32)
Back Panel Upper Garnish
9.8 (100, 7)
Back Panel Lower Garnish
Rear Seat Cushion
9.8 (100, 7)
Back Panel Trim
Belt Holder
Split seat (Inner belt) :
Front Seat Center Belt
43 (440, 32)
Front Seat Inner Belt
43 (440, 32)
9.8 (100, 7)
Rear Seat Cushion
T
N·m (kgf·cm, ft·lbf) : Specified torque
H07737

BO091–02

INSPECTION

CAUTION:

Replace the seat belt assembly (outer belt, inner belt, bolts, nuts or sill–bar) if it has been used in a severe impact. The entire assembly should be replaced even if damage is not obvious.

1. Except manual type:
RUNNING TEST (IN SAFE AREA)

(a) Fasten the front seat belts.

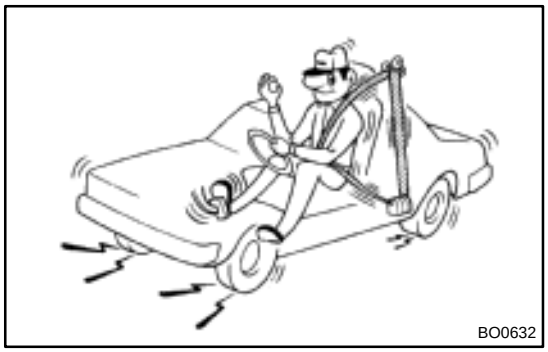
BO0632

(b) Drive the car at 10 mph (16 km/h) and slam on the brakes. Check that the belt locks and cannot be extended at this time.

HINT:

Conduct this test in a safe area. If the belt does not lock, remove the belt mechanism assembly and conduct the following static check. Also, whenever installing a new belt assembly, verify the proper operation before installation.

2. Driver's seat belt (ELR):
STATIC TEST

(a) Make sure that the belt locks when pulled out quickly.
(b) Remove the locking retractor assembly.
(c) Tilt the retractor slowly.

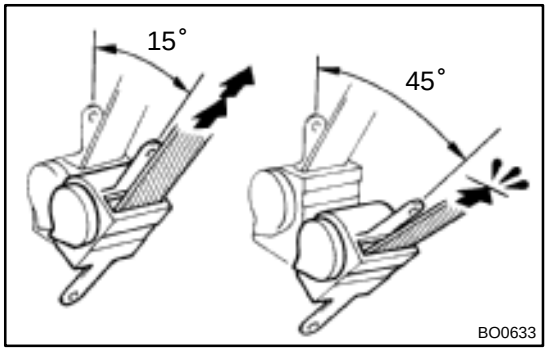

BO0633

(d) Make sure that the belt can be pulled out at a tilt of 15 degrees or less, and cannot be pulled out over 45 degrees of tilt.

If a problem is found, replace the assembly.

3. Except driver's seat belt (ALR/ELR):
STATIC TEST

(a) Make sure that the belt locks when pulled out quickly.
(b) Remove the locking retractor assembly.
(c) Pull out the whole belt and measure the length of the whole belt.
Then retract the belt slightly and pull it out again
(d) Make sure that the belt cannot be extended further.

If a problem is found, replace the assembly.

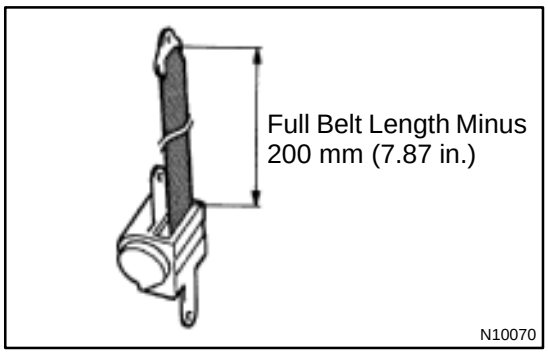

(e) Retract the whole belt, then pull out the belt until 200 mm (7.87 in.)of belt remains retracted.
(f) Tilt the retractor slowly.

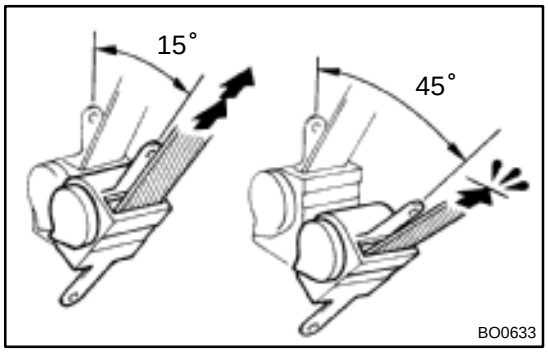

(g) Make sure that the belt can be pulled out at a tilt of 15 degrees or less, and cannot be pulled out at over 45 degrees of tilt.

If a problem is found, replace the assembly.

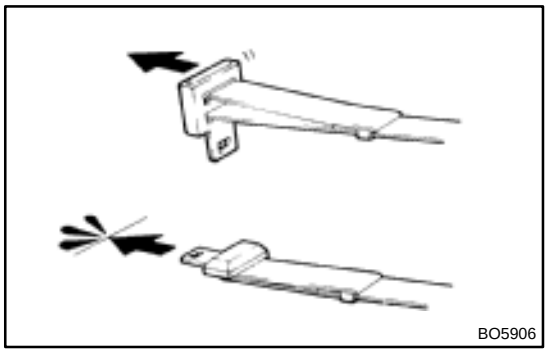

4. Manual type:
TESTING

(a) Adjust the belt to the proper length.
(b) Apply a firm load to the belt.
(c) Make sure that the belt does not extend.

BO25A–01

DISPOSAL

HINT:

When scrapping vehicles equipped with a supplemental restraint system or disposing of a front seat outer belt (with seat belt pretensioner) always first activate the seat belt pretensioner in accordance with the procedure described below. If any abnormality occurs in the seat belt pretensioner operation, contact the SERVICE DEPT. of TOYOTA MOTOR SALES, U.S.A.,INC. When disposing of a front seat outer belt (with seat belt pretensioner) activated in a collision, follow the same procedure given in step 1–(d) in ”DISPOSAL”.

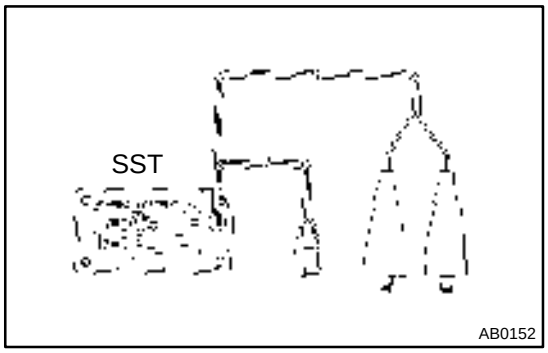

CAUTION:

- **Never dispose of front seat outer belt which has an inactivated pretensioner.**
- **The seat belt pretensioner produces a sizeable exploding sound when it activates, so perform the operation out–of–door and where it will not create a nuisance to nearby residents.**
- **When activating the seat belt pretensioner, always use the specified SST. (SRS Airbag Deployment Tool) Perform the operation in a place away from electrical noise.**

  SST 09082–00700, 09082–00740
- **When activating a front seat outer belt (with seat belt pretensioner), perform the operation at least 10 m (33 ft) away from the front seat outer belt.**
- **Use gloves and safety glasses when handling a front seat outer belt with activated pretensioner.**
- **Always wash your hands with water after completing the operation.**
- **Do not apply water, etc. to a front seat outer belt with activated pretensioner.**

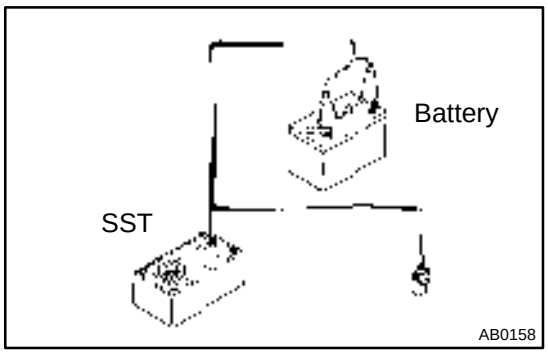

1. SEAT BELT PRETENSIONER ACTIVATION WHEN SCRAPPING VEHICLE

HINT:
Have a battery ready as the power source to activate the seat belt pretensioner.

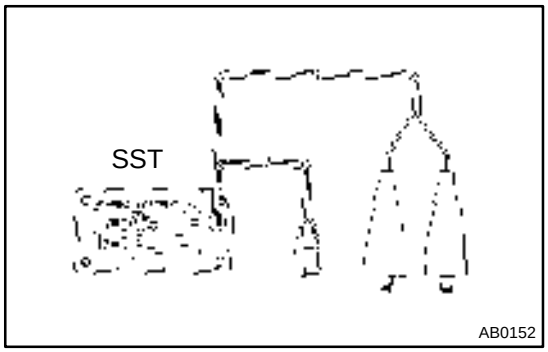

(a) Check functioning of SST.

CAUTION:
When activating the seat belt pretensioner, always use the specified SST: SRS Airbag Deployment Tool.

SST 09082–00700, 09082–00740

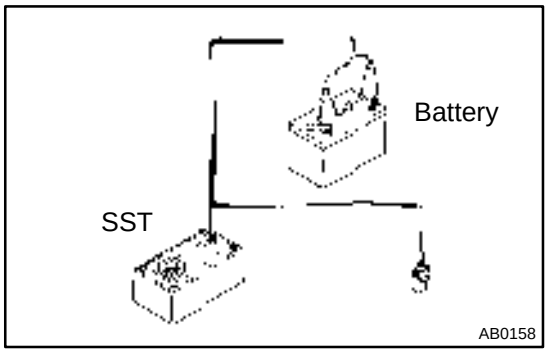

(1) Connect the SST to the battery.
Connect the red clip of the SST to the battery positive (+) terminal and the black clip to the battery negative (–) terminal.

HINT:
Do not connect the yellow connector which will be connected with the seat belt pretensioner.

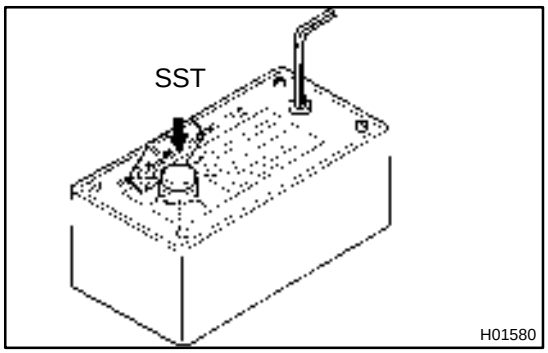

(2) Check functioning of SST.
Press the SST activation switch, and check the LED of the SST activation switch lights up.

CAUTION:
If the LED lights up when the activation switch is not being pressed, SST malfunction is probable, so definitely do not use the SST.

(b) Regular cab:
Disconnect the pretensioner connector.
(1) Remove the front seat outer belt floor anchor.
(2) Remove the front seat outer belt shoulder anchor.
(3) Remove the retractor cover.
(4) Remove the retractor of front seat outer belt.

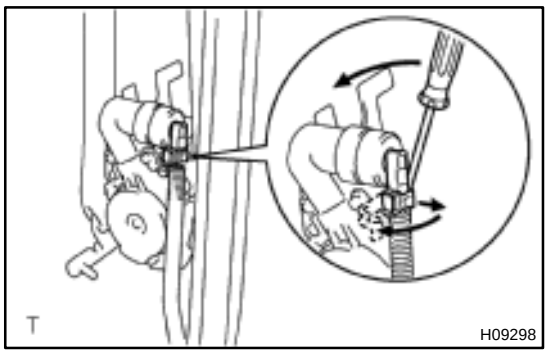
T
H09298

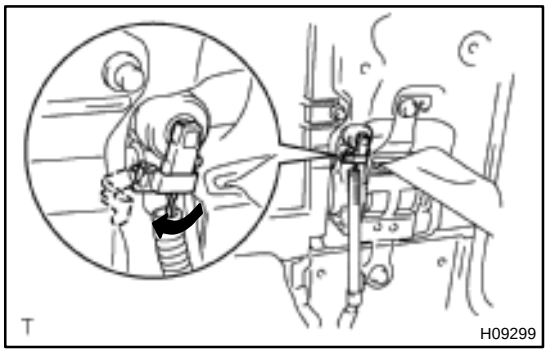
T
H09299

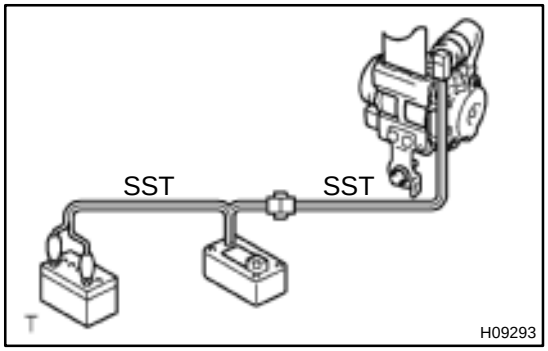
SST
SST
T
H09293

(e) Activate the seat belt pretensioner.
(1) Confirm that no one is inside the vehicle or within 10 m (33 ft) area around of the vehicle.
(2) Press the SST activation switch and activate the seat belt pretensioner.

HINT:
The seat belt pretensioner operates simultaneously as the LED of the SST activation switch lights up.

(f) Dispose of front seat outer belt (with seat belt pretensioner).

CAUTION:
- **The front seat outer belt is very hot when the seat belt pretensioner is activated, so leave it alone for at least 30 minutes after activation.**
- **Use gloves and safety glasses when handling a front seat outer belt with activated seat belt pretensioner.**
- **Always wash your hands with water after completing the operation.**
- **Do not apply water, etc. to a front seat outer belt with activated seat belt pretensioner.**

HINT:
When scrapping a vehicle, activate the seat belt pretensioner and scrap the vehicle with activated front seat outer belt still installed.

2. ACTIVATION WHEN DISPOSING OF FRONT SEAT OUTER BELT ONLY

NOTICE:
- **When disposing of the front seat outer belt (with seat belt pretensioner) only, never use the customer's vehicle to activate the seat belt pretensioner.**
- **Be sure to follow the procedure given on the next page when activating the seat belt pretensioner.**

HINT:
Have a battery ready as the power source when activating the seat belt pretensioner.

(a) Remove the front seat outer belt.
(See page BO–94)

HINT:
Cut the belt near the seat belt retractor.

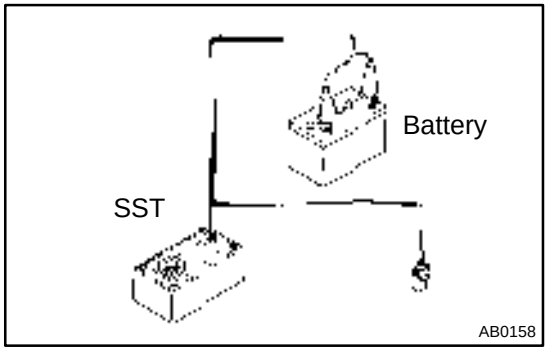

(b) Check functioning of SST.
(See step 1–(a))
SST 09082–00700, 09082–00740

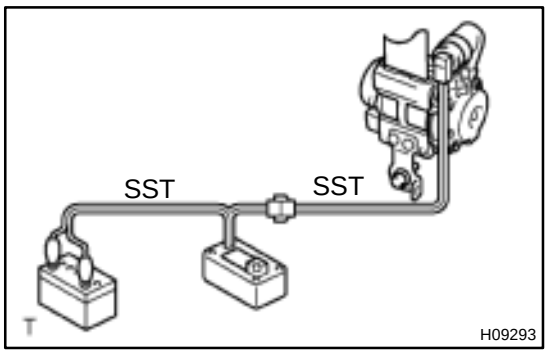

(c) Install the SST.

(1) Connect the 2 SST, then connect them to the seat belt pretensioner.

SST 09082–00700, 09082–00740

NOTICE:

To avoid damaging the SST connector and wire harness, do not lock the secondary lock of the twin lock.

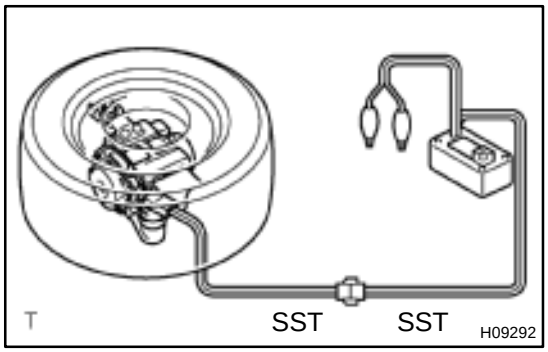

(2) Place the front seat outer belt on the ground and cover it with the disc wheel with tire.

NOTICE:

Place the front seat outer belt as shown in the illustration.

(3) Move the SST as least 10 m (33 ft) away from the disc wheel.

NOTICE:

Take care not to damage the SST wire harness.

(d) Activate the seat belt pretensioner.

(1) Connect the SST red clip to the battery positive (+) terminal and black clip to the battery negative (–) terminal.

(2) Check that no one is within 10 m (33 ft) area around the disc wheel.

(3) Press the SST activation switch and activate the seat belt pretensioner.

HINT:

The seat belt pretensioner operates simultaneously as the LED of the SST activation switch lights up.

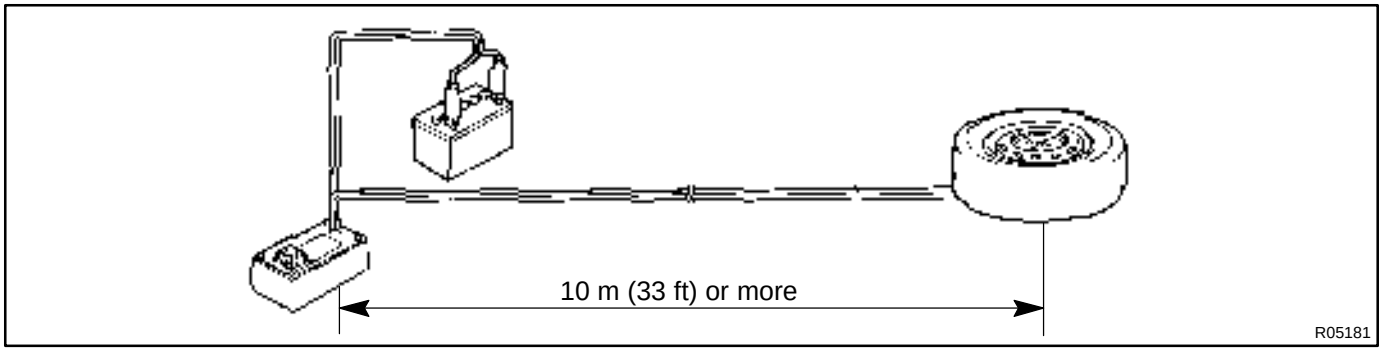

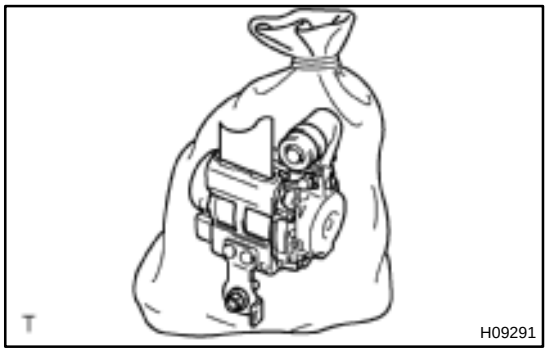

(e) Dispose of front seat outer belt (with seat belt pretensioner).

CAUTION:

- **The front seat outer belt is very hot when the seat belt pretensioner is activated, so leave it alone for at least 30 minutes after activation.**
- **Use gloves and safety glasses when handling a front seat outer belt with activated seat belt pretensioner.**
- **Always wash your hands with water after completing the operation.**

- **Do not apply water, etc. to a front seat outer belt with activated seat belt pretensioner.**
  (1) Remove the disc wheel and SST.
  (2) Place the front seat outer belt in a vinyl bag, tie the end tightly and dispose of it in the same way as other general parts.

BO259–01

INSPECTION

1. PRETENSIONER IS NOT ACTIVATED

(a) Perform a diagnostic system check.
(See page DI–456)

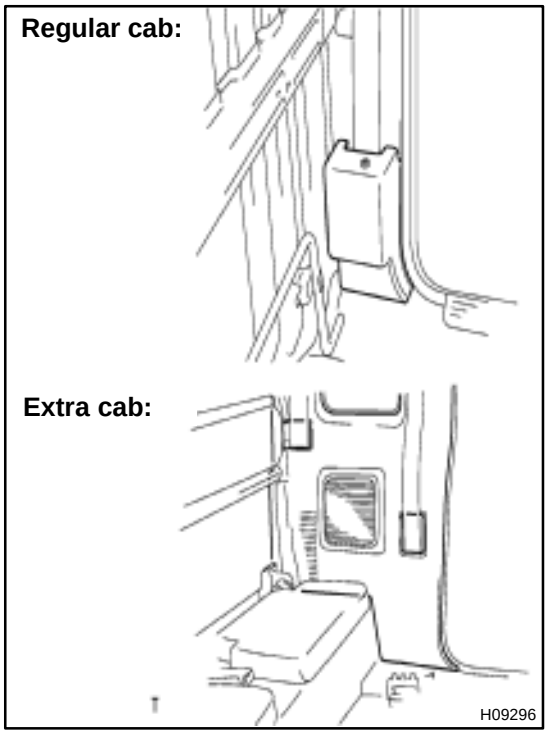

(b) Perform a visual check which includes the following items with the front seat outer belt removed from the vehicle.

- Regular cab:
  Check for cuts and cracks in, or marked discoloration on the retractor cover.
- Extra cab:
  Check for cuts and cracks in, or marked discoloration on the quarter trim.
- Check for cuts and cracks in wire harness, and for chipping in connectors.

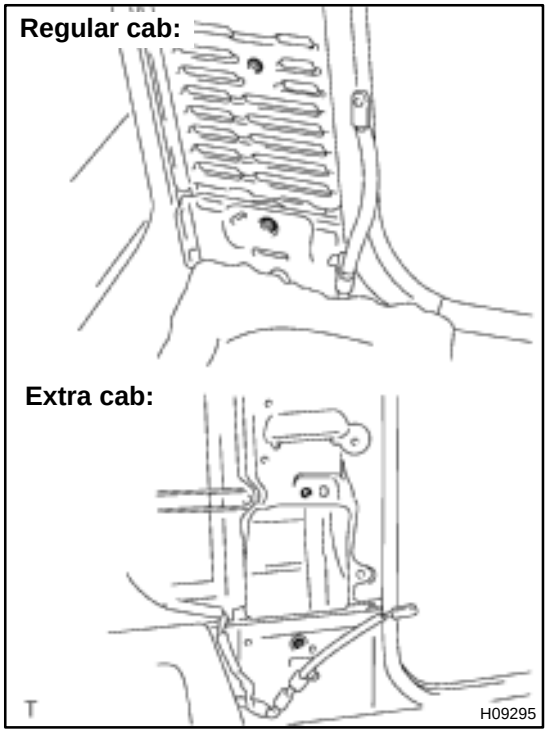

- Check for deformation of the quarter panel.

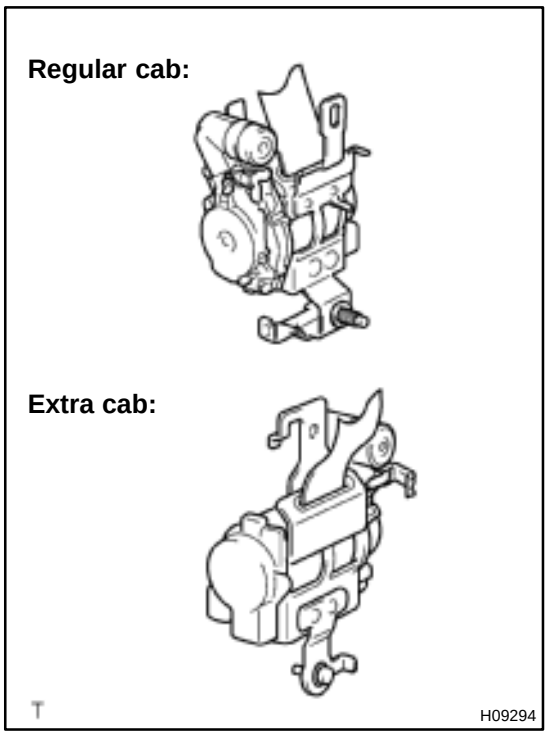

- Check for cuts miute cracks in wire harness or marked discoloration on the front seat outer belt.

CAUTION:
For removal and installation of the front seat outer belt, see page BO–98 and BO–110.
Be sure to follow the correct procedure.

2. PRETENSIONER IS ACTIVATED

(a) Perform a diagnostic system check.
(See page DI–456)

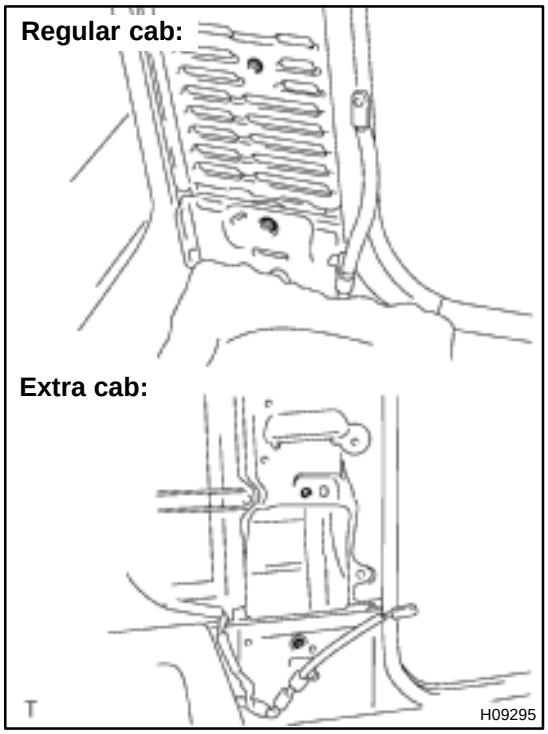

(b) Perform a visual check which includes the following items with the front seat outer belt removed from the vehicle.
- Check for deformation of the quarter panel.
- Check for damage on the connector and wire harness.

BO25B–01

INSTALLATION

NOTICE:

- **Never use seat belt pretensioner from another vehicle. When replacing parts, replace them with new parts.**
- **Make sure that the front seat outer belt is installed with the specified torque.**
- **If the front seat outer belt has been dropped, or there are cracks, dents or other defects in the case or connector, replace the front seat outer belt with a new one.**
- **When installing the front seat outer belt, take care that the wiring does not interfere with other parts and is not pinched between other parts.**

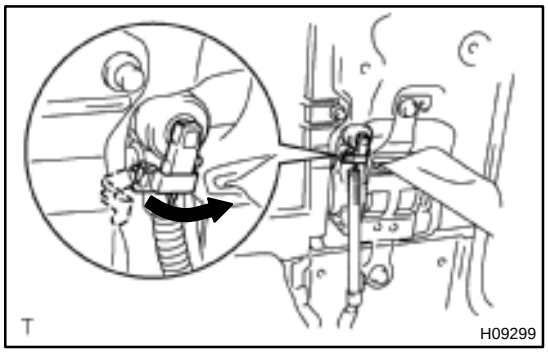

1. Extra cab:

INSTALL FRONT SEAT OUTER BELT

(a) Install the retractor of front seat outer belt.

(1) Install the retractor of front seat outer belt with the 2 bolts.

Torque:
Upper bolt: 4.9 N·m (50 kgf·cm, 43 in.·lbf)
Lower bolt: 43 N·m (440 kgf·cm, 32 ft·lbf)

(2) Connect the pretensioner connector as shown in the illustration.

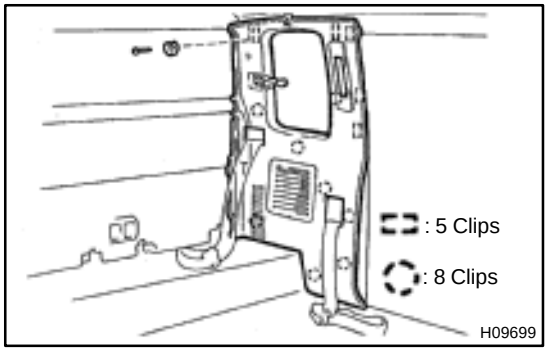

(b) Install the quarter trim.

(c) Install the coat hook with the screw.

(d) Install the front and rear seat outer belt floor anchors with the 2 bolts.

Torque: 43 N·m (440 kgf·cm, 32 ft·lbf)

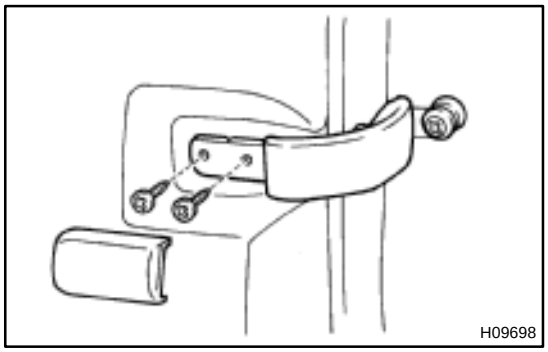

(e) Install the lock handle.

(1) Install the lock handle with the 2 screws.

(2) Install the cover.

(f) Install the front and rear seat outer belt shoulder anchors with the 2 bolts, then close the covers.

Torque: 43 N·m (440 kgf·cm, 32 ft·lbf)

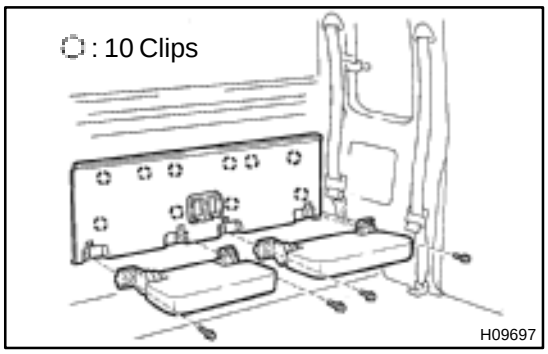

(g) Install the rear seat cushions with the 4 bolts.
Torque: 9.8 N·m (100 kgf·cm, 7 ft·lbf)
(h) Install the back panel lower garnish.

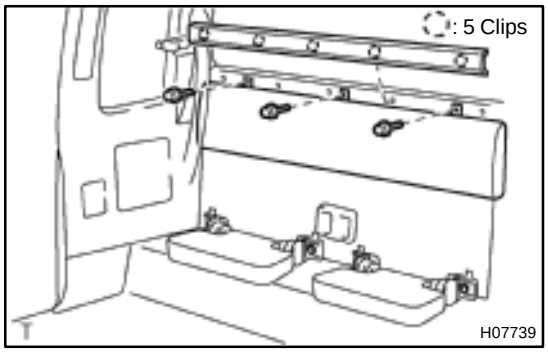

(i) Install the back panel trim with the3 bolts.
Torque: 9.8 N·m (100 kgf·cm, 7 ft·lbf)
(j) Install the back panel upper garnish.
(k) Install the door scuff plate with the 4 screws.

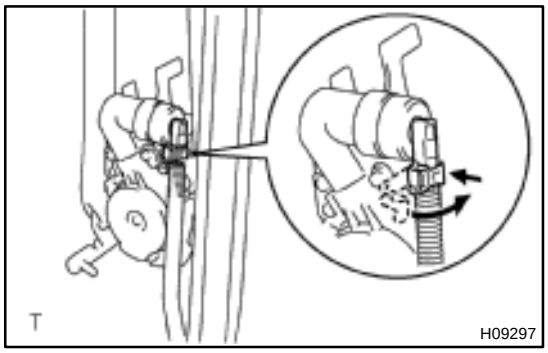

2. Regular cab:
INSTALL FRONT SEAT OUTER BELT
(a) Install the retractor of front seat outer belt.
(1) Install the retractor of front seat outer belt with the 2 bolts.
Torque:
Upper bolt: 4.9 N·m (50 kgf·cm, 43 in.·lbf)
Lower bolt: 43 N·m (440 kgf·cm, 32 ft·lbf)
(2) Connect the pretensioner connector as shown in the illustration.
(b) Install the retractor cover with the clip.
(c) Install the front seat outer belt shoulder anchor with the bolt.
Torque: 43 N·m (440 kgf·cm, 32 ft·lbf)
(d) Install the front seat outer belt floor anchor with the bolt.
Torque: 43 N·m (440 kgf·cm, 32 ft·lbf)

SEAT BELT PRETENSIONER

BO258–01

REMOVAL

NOTICE:

- **If the wiring connector of the seat belt pretensioner is disconnected with the ignition switch at ON or ACC, diagnostic trouble codes will be recorded.**
- **Never use seat belt pretensioner from another vehicle. When replacing parts, replace them with new parts.**

1. Regular cab:

REMOVE FRONT SEAT OUTER BELT

(a) Remove the bolt and front seat outer belt floor anchor.

(b) Using a screwdriver, open the cover, then unfaten the bolt and remove the front seat outer belt shoulder anchor.

HINT:

Tape the screwdriver tip before use.

(c) Remove the clip and retractor cover.

(d) Remove the retractor of front seat outer belt.

CAUTION:

Never disassemble the front seat outer belt.

NOTICE:

When removing the retractor of front seat outer belt, take care not to pull the seat belt pretensioner wire harness.

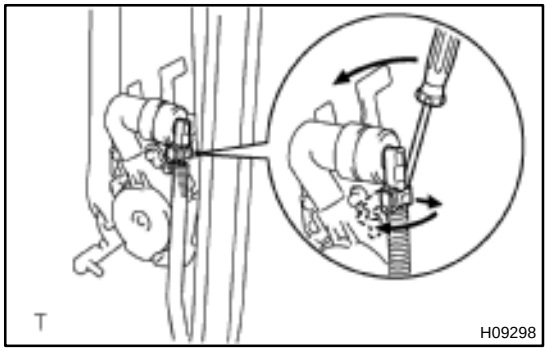

(1) Disconnect the pretensioner connector as shown in the illustration.

CAUTION:

When removing the seat belt pretensioner, work must be started 90 seconds after the ignition switch is turned to the "LOCK" position and the negative (–) terminal cable is disconnected from the battery.

(2) Remove the 2 bolts and retractor of front seat outer belt.

2. Extra cab:

REMOVE FRONT SEAT OUTER BELT

(a) Remove the 4 screws and door suff plate.

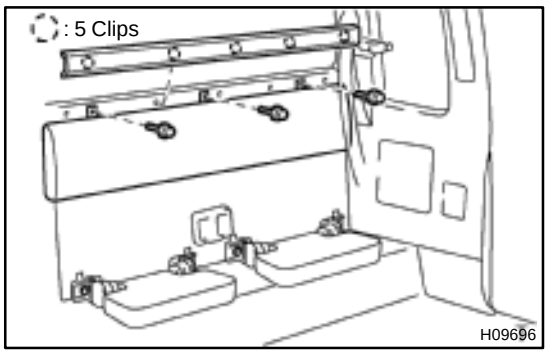

(b) Using a screwdriver, remove the back panel upper garnish.

HINT:

Tape the screwdriver tip before use.

(c) Remove the 3 bolts and back panel trim.

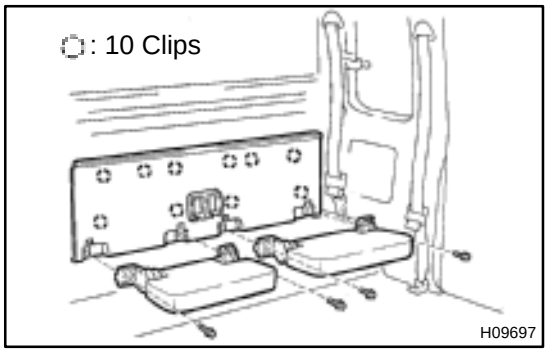

(d) Using a screwdriver, remove the back panel lower garnish.

HINT:

Tape the screwdriver tip before use.

(e) Remove the 4 bolts and rear seat cushions.

(f) Remove the front and rear seat outer belt shoulder anchors.

Using a screwdriver, open the covers, then unfaten the bolts and remove the front and rear seat outer belt soulder anchors.

HINT:

Tape the screwdriver tip before use.

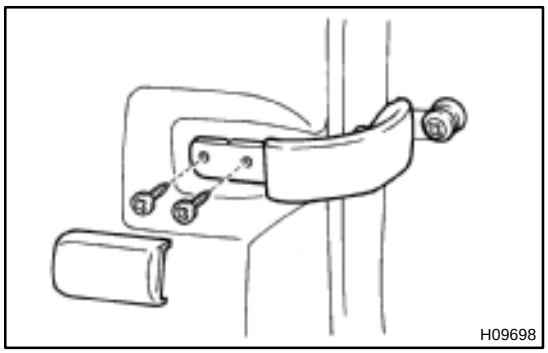

(g) Remove the lock handle.

(1) Using a screwdriver, remove the cover.

HINT:

Tape the screwdriver tip before use.

(2) Remove the 2 screws and lock handle.

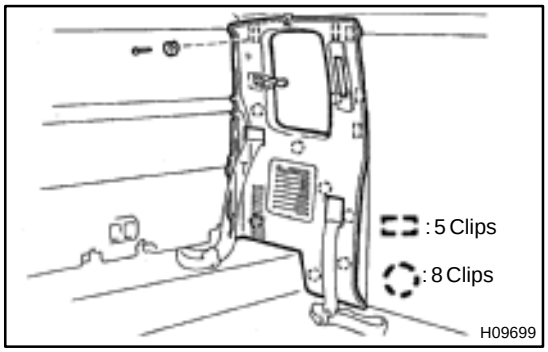

(h) Remove the quarter trim.

(1) Remove the 2 bolts and front and rear seat outer belt floor anchors.

(2) Remove the screw and coat hook.

(3) Using a screwdriver, remove the quarter trim.

NOTICE:

Paying enough attention remove the clip on the quarter trim shown in the illustration. Otherwise, the quarter trim or the front pillar garnish might be broken.

HINT:
Tape the screwdriver tip before use.

(i) Remove the retractor of front seat outer belt.

CAUTION:
Never disassemble the front seat outer belt.
NOTICE:
When removing the retractor of front seat outer belt, take care not to pull the seat belt pretensioner wire harness.

(1) Disconnect the retractor switch connector.

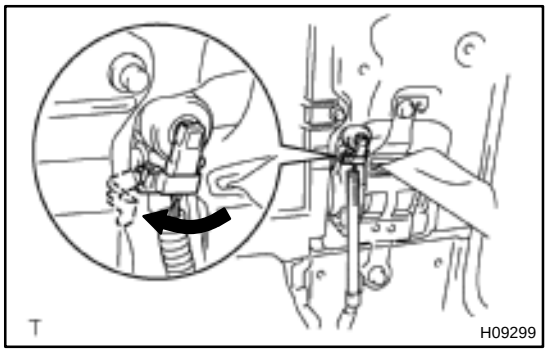

(2) Disconnect the pretensioner connector as shown in the illustration.

CAUTION:
When removing the seat belt pretensioner, work must be started 90 seconds after the ignition switch is turned to the "LOCK" position and the negative (–) terminal cable is disconnected from the battery.

(3) Remove the 2 bolts and retractor of front seat outer belt.

BO1QY–03

REPLACEMENT

REPLACE REQUIREMENTS

In the following cases, replace the seat belt pretensioner.

- If the seat belt pretensioner has been activated.
- If the seat belt pretensioner has been found to be faulty in troubleshooting.
- If the front seat outer belt has been found to be faulty during checking in items 1–(b) or 2–(b).
- If the front seat outer belt has been dropped.

CAUTION:

For removal and installation of the seat belt pretensioner, see page BO–98 and BO–110.
Be sure to follow the correct procedure.

TAIL GATE

COMPONENTS

BO07Y–02

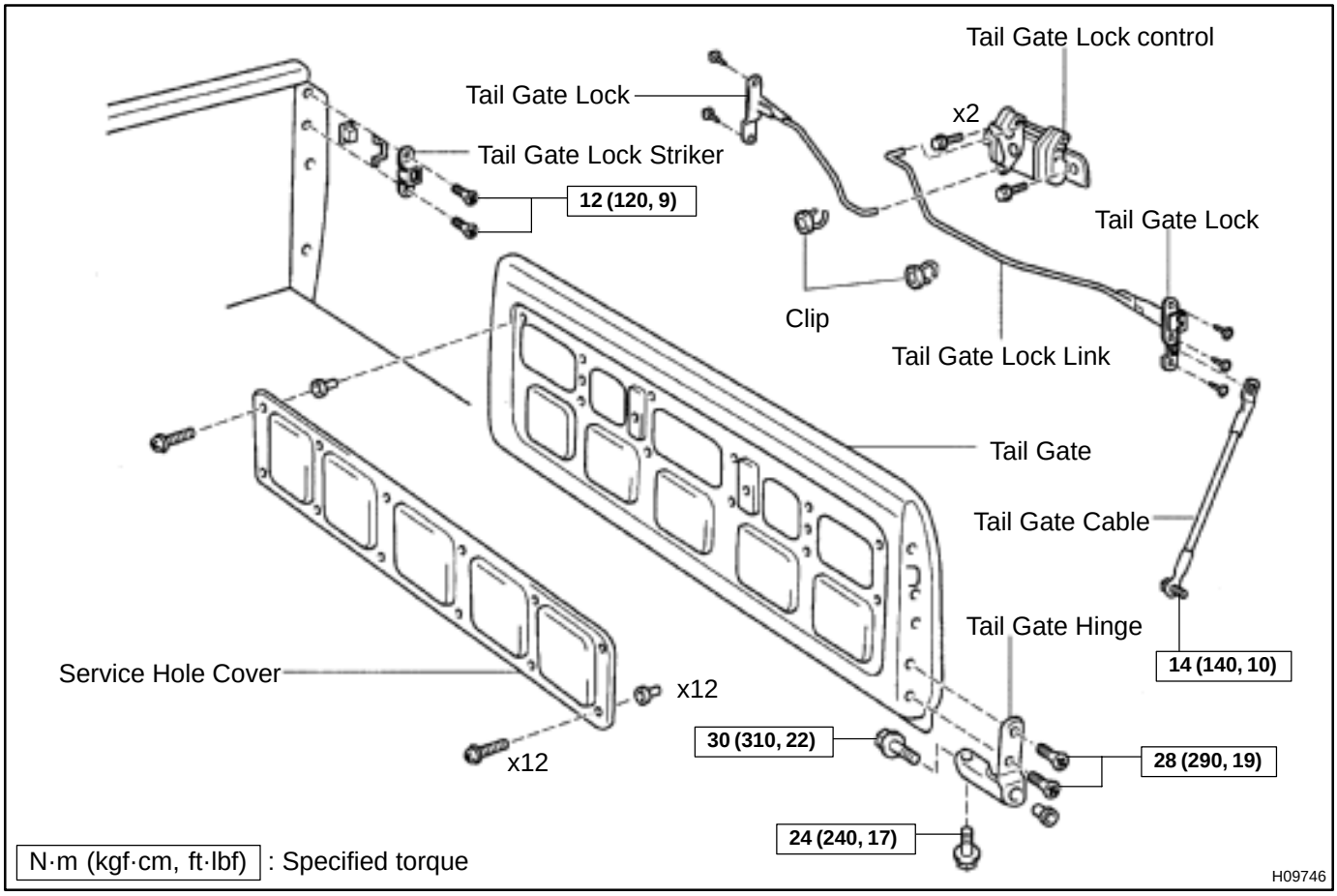

BO080–02

INSTALLATION

Installation is in the reverse order of removal (See page BO–54).

BO07Z–02

REMOVAL

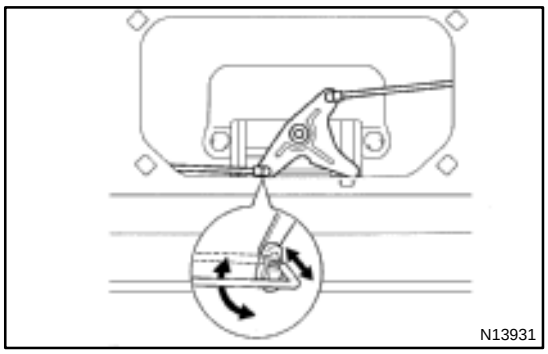

1. REMOVE SERVICE HOLE COVER

Remove the 12 screws and service hole cover.

2. DISCONNECT TALE GATE LOCK LINK FROM TAIL GATE LOCK CONTROL

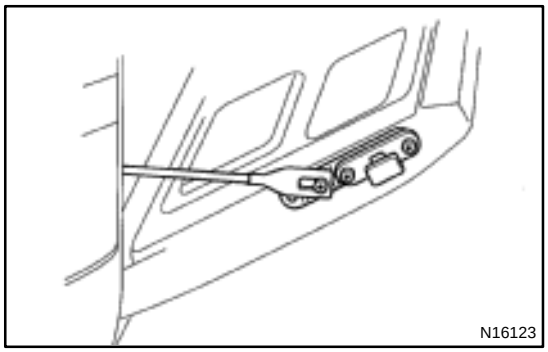

3. REMOVE TAIL GATE CABLE

(a) Disconnect the tail gate cable from the tail gate.

(b) Remove the bolt and tail gate cable from the body.

(c) Employ the same manner described above to the other side.

Torque: 14 N·m (140 kgf·cm, 10 ft·lbf)

4. REMOVE TAIL GATE LOCK FROM TAIL GATE

(a) Remove the 2 screws and tail gate lock.

(b) Employ the same manner described above to the other side.

5. REMOVE TAIL GATE LOCK STRIKERS

Remove the 4 screws and tail gate lock strikers.

Torque: 12 N·m (120 kgf·cm, 9 ft·lbf)

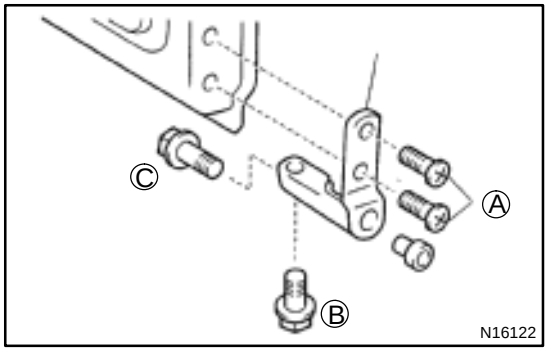

6. REMOVE TAIL GATE

Remove the 4 screws and tail gate.

Torque:

A: 28 N·m (290 kgf·cm, 19 ft·lbf)

7. REMOVE TAIL GATE HINGE

(a) Remove the 2 bolts and tail gate hinge.

Torque:

B: 30 N·m (310 kgf·cm, 22 ft·lbf)

C: 24 N·m (290 kgf·cm, 19 ft·lbf)

(b) Employ the same manner described above to the other side.

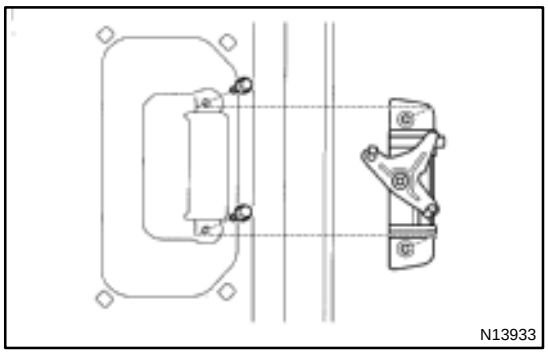

8. REMOVE TAIL GATE LOCK CONTROL

Remove the 2 bolts and tail gate lock control.

WHEEL ARCH MOULDING

COMPONENTS

BO079–02

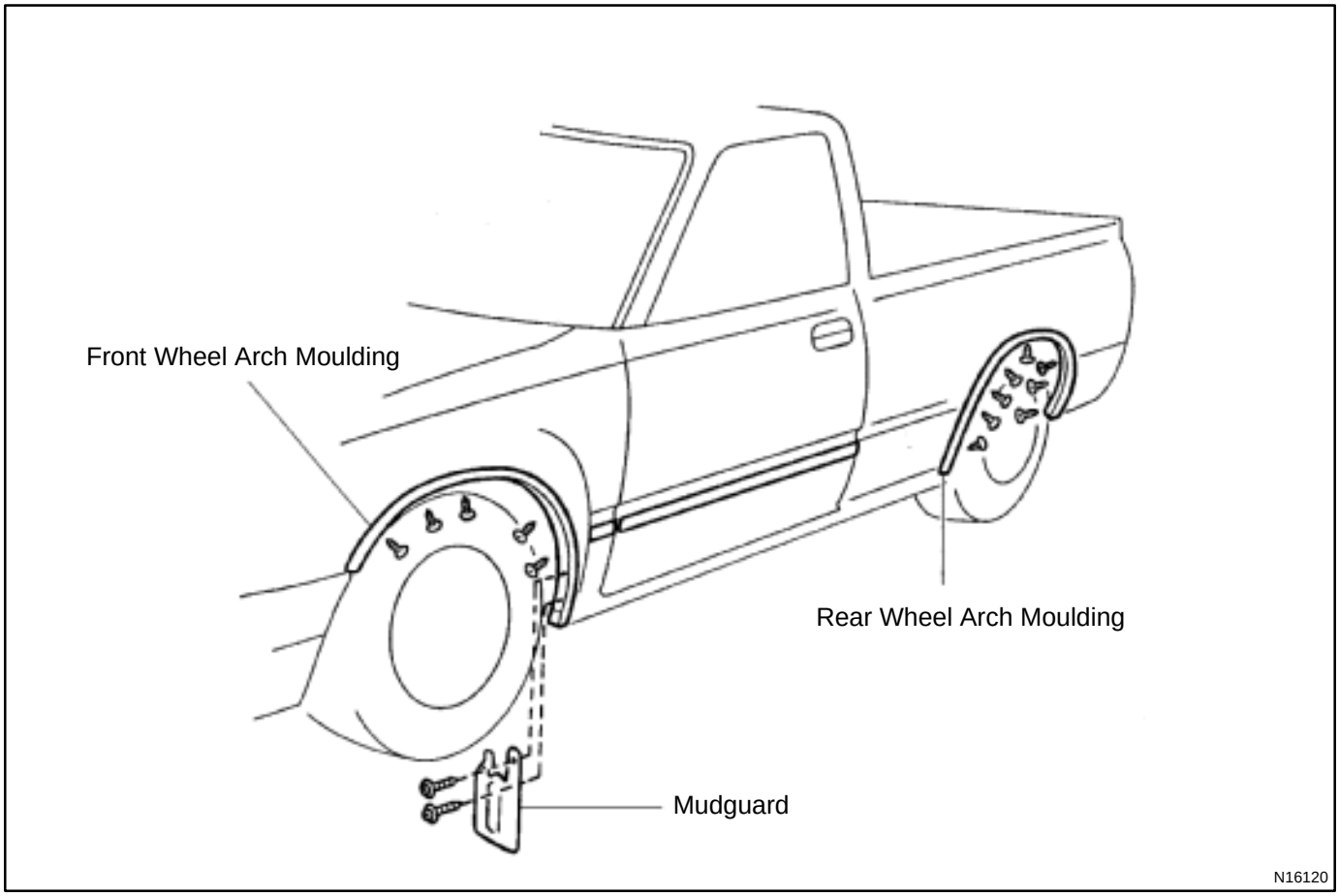

BO07B–02

INSTALLATION

Installation is in the reverse order of removal (See page BO–20).

BO07A–02

REMOVAL

1. REMOVE FRONT WHEEL ARCH MOULDING

(a) Remove the 2 screws and mudguard.

(b) Remove the 5 screws.

(c) Using a screwdriver, pry up the wheel arch moulding and remove it.

HINT:

Tape the screwdriver tip before use.

2. REMOVE REAR WHEEL ARCH MOULDING

(a) Remove the 8 screws.

(b) Using a screwdriver, pry up the wheel arch moulding and remove it.

HINT:

Tape the screwdriver tip before use.

WHEEL OPENING MOULDING

BO07C–02

COMPONENTS

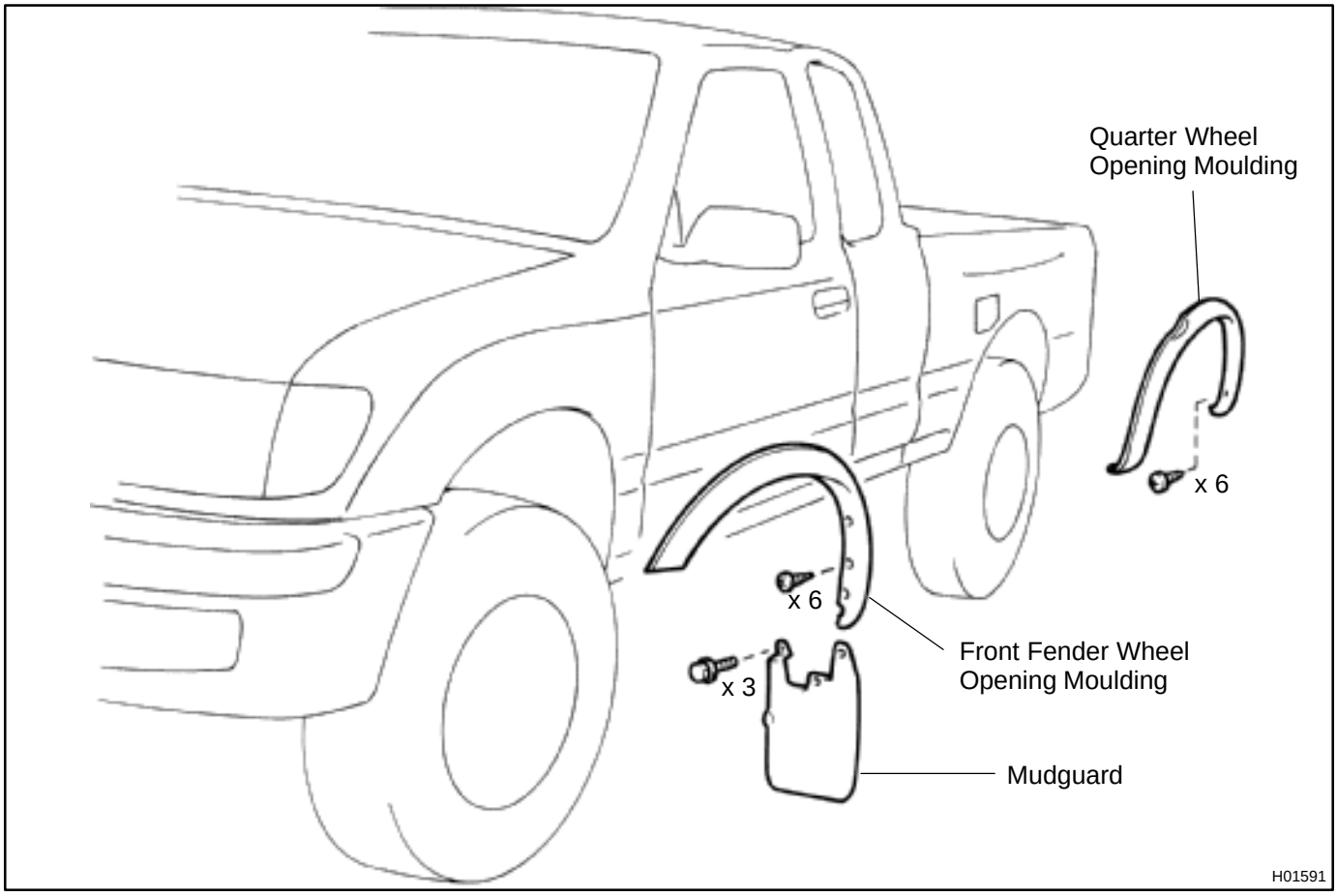

BO07E–02

INSTALLATION

Installation is in the reverse order of removal (See page BO–23).

BO07D–02

REMOVAL

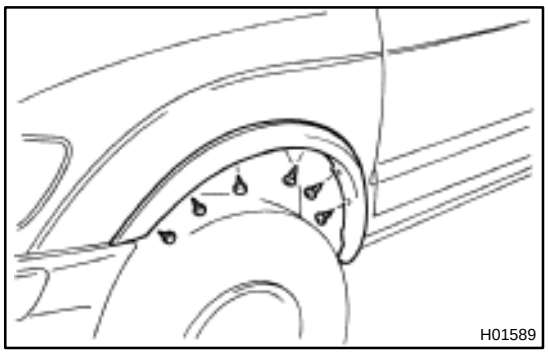

1. REMOVE FRONT FENDER WHEEL OPENING MOULDING

(a) Remove the 3 bolts and mudguard.

(b) Remove the 6 screws and front fender wheel opening moulding.

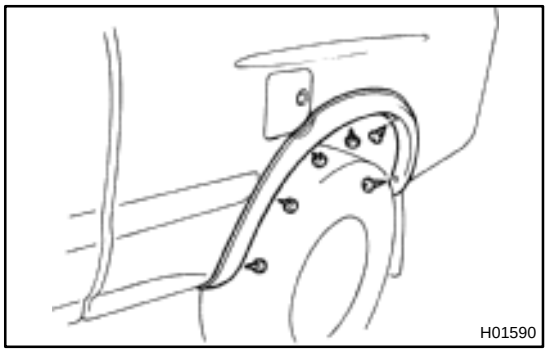

2. REMOVE QUARTER WHEEL OPENING MOULDING

Remove the 6 screws and quarter wheel opening moulding.

WINDSHIELD

COMPONENTS

BO07F–02

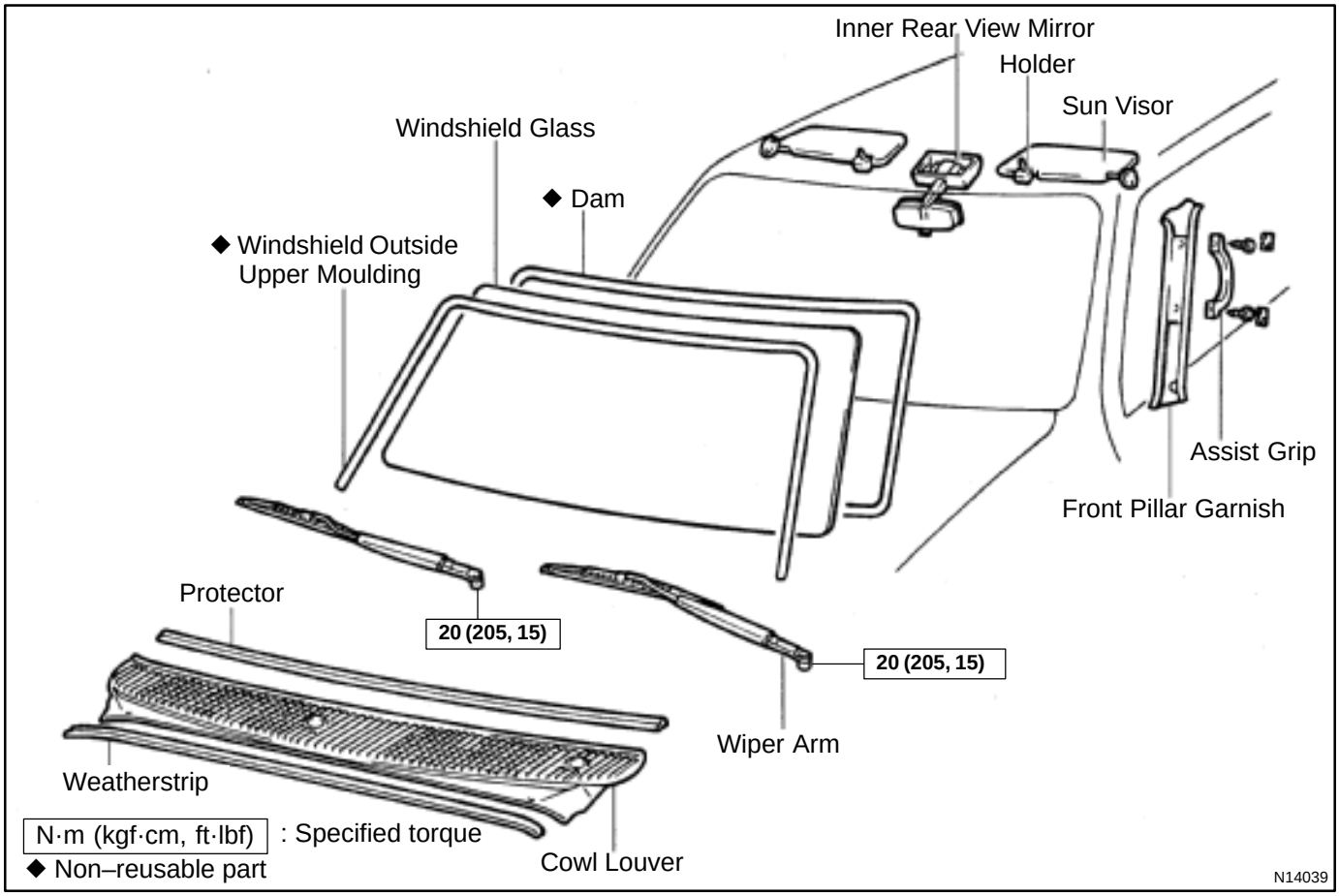

BO07H–02

INSTALLATION

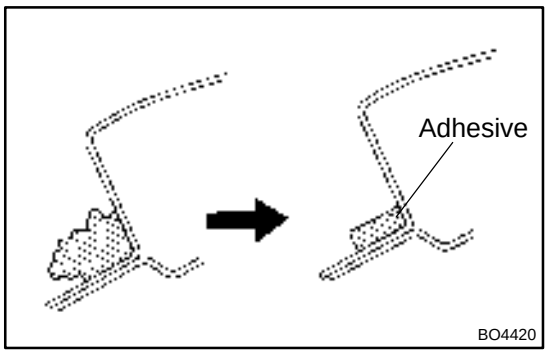

1. CLEAN AND SHAPE CONTACT SURFACE OF BODY

(a) Using a knife, cut away any rough areas on the body.

HINT:

Leave as much of the adhesive on the body as possible.

(b) Clean the cutting surface of the adhesive with a piece of shop rag saturated in a cleaner.

HINT:

Even if all the adhesive has been removed, clean the body.

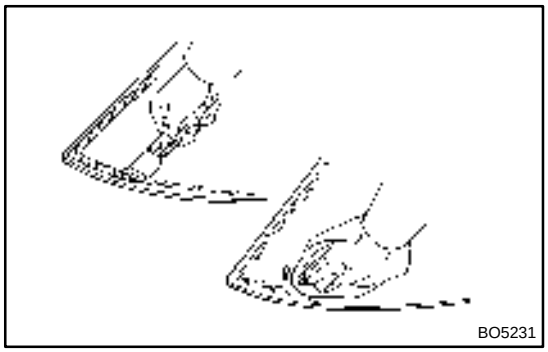

2. CLEAN REMOVED GLASS

(a) Remove the damaged dam.

(b) Using a scraper, remove the adhesive sticking to the glass.

(c) Clean the glass with a cleaner.

NOTICE:

- **Be careful not to damage the glass.**
- **Do not touch the glass after cleaning it.**

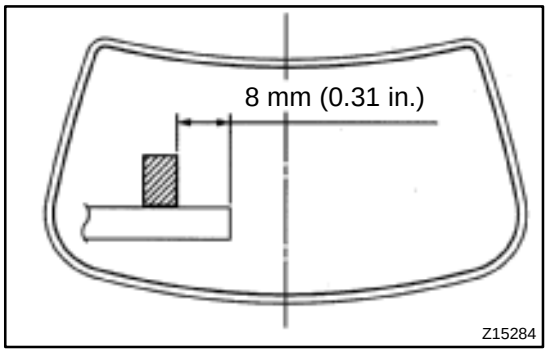

3. INSTALL NEW DAM

Install a new dam with the double – stick tape as shown in the illustration.

NOTICE:

Do not touch the glass face after cleaning it.

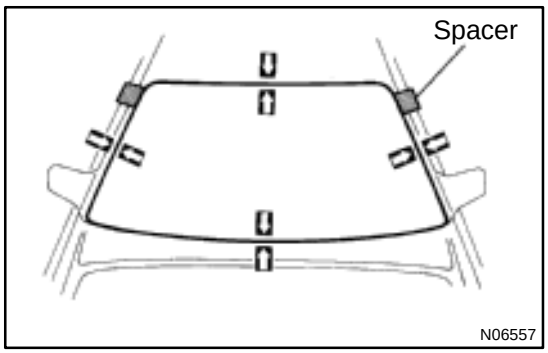

4. POSITION GLASS

(a) Place the glass in the correct position.

(b) Check that all contacting parts of the glass rim are perfectly even and do not make contact with the spacers.

(c) Place reference marks between the glass and body.

(d) Remove the glass.

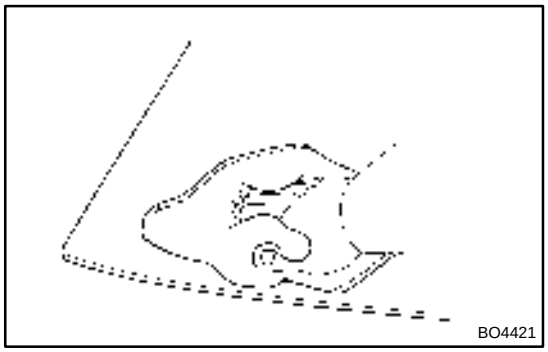

5. CLEAN CONTACT SURFACE OF GLASS

Using a cleaner, clean the contact surface which is black–colored area around the entire glass rim.

NOTICE:

Do not touch the glass face after cleaning it.

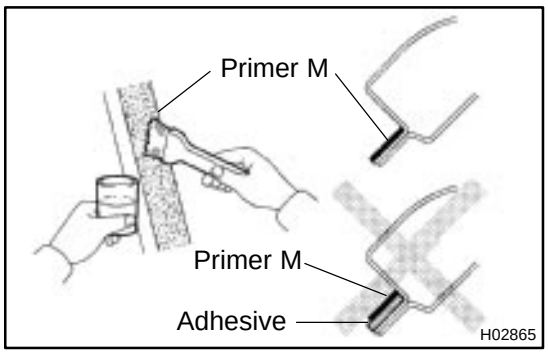

6. COAT CONTACT SURFACE OF BODY WITH PRIMER "M"

Using a brush, coat Primer M to the exposed part of body on the vehicle side.

NOTICE:

- **Let the primer coating dry for 3 minutes or more.**
- **Do not coat Primer M to the adhesive.**
- **Do not keep any of the opened Primer M for later use.**

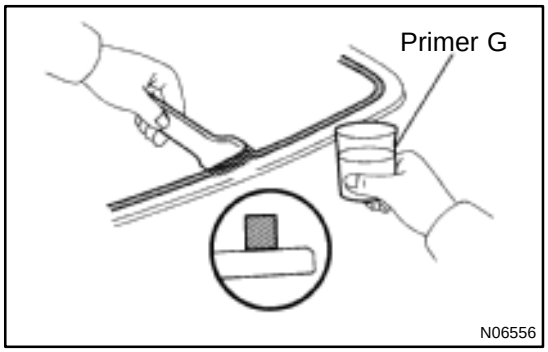

7. COAT CONTACT SURFACE OF GLASS WITH PRIMER "G"

(a) Using a brush or sponge, coat the edge of the glass and the contact surface with Primer G.

(b) When the primer is coated wrongly to the area other than the specified, wipe it off with a clean shop rag before the primer dries.

NOTICE:

- **Let the primer coating dry for 3 minutes or more.**
- **Do not keep any of the opened Primer G for later use.**

8. APPLY ADHESIVE

(a) Cut off the tip of the cartridge nozzle.

Part No.08850–00801 or equivalent

HINT:

After cutting off the tip, use all adhesive within the time described in the table below.

Temperature	Tackfree time
35 ˚C (95 ˚F)	15 minutes
20 ˚C (68 ˚F)	100 minutes
5 ˚C (41 ˚F)	8 hours

(b) Load the cartridge into the sealer gun.

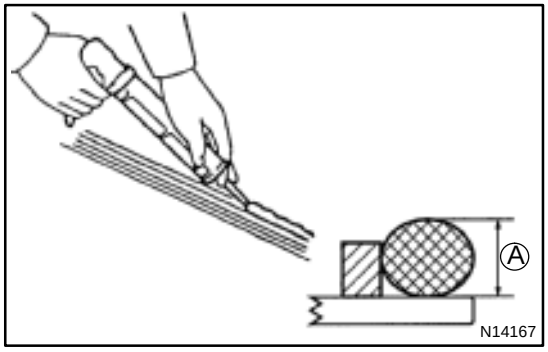

(c) Coat the glass with adhesive, as shown in the illustration.

Adhesive height:

A: 8.0 – 10 mm (0.31 – 0.39 in.)

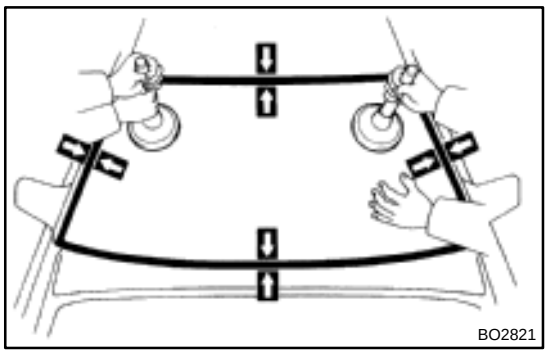
BO2821

9. INSTALL GLASS

(a) Position the glass so that the reference marks are lined up, and press it in gently along the rim.

(b) Using a spatula, apply adhesive on the glass rim.

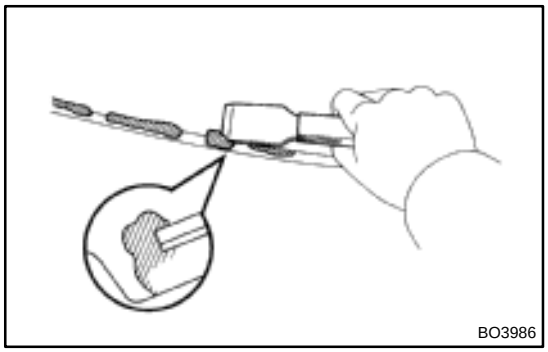
BO3986

(c) Use a scraper to remove any excess or protruding adhesive.

(d) Hold the glass in place securely with a protective tape or equivalent until the adhesive hardened.

NOTICE:

Take care not to drive the vehicle during the time described in the table below.

Temperature	Minimum time prior to driving the vehicle
35 ˚C (95 ˚F)	1.5 hours
20 ˚C (68 ˚F)	5 hours
5 ˚C (41 ˚F)	24 hours

10. INSPECT FOR LEAKS AND REPAIR

(a) Conduct a leak test after the hardening time has elapsed.

(b) Seal any leak with sealant.

Part No. 08833–00030 or equivalent

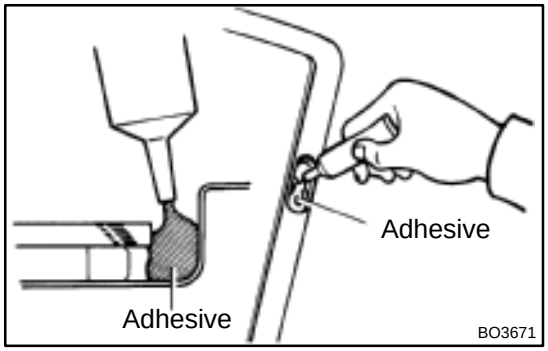

BO3671

11. APPLY ADHESIVE TO MOULDING INSTALLATION AREA

Coat the glass with adhesive at the moulding installation area.

Part No. 08833–00030 or equivalent

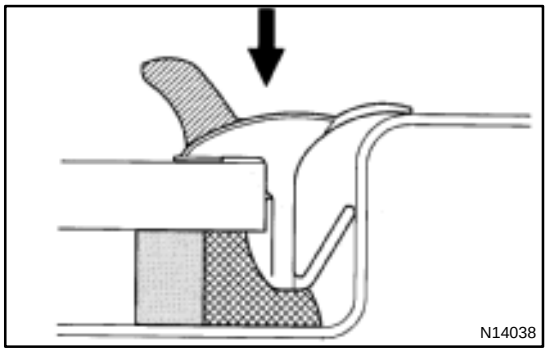
N14038

12. INSTALL NEW WINDSHIELD OUTSIDE UPPER MOULDING

Place new moulding into the body and tap it by hand.

13. INSTALL WIPER ARMS (See page BO–18)

Torque: 20 N·m (205 kgf·cm, 15 ft·lbf)

14. INSTALL COWL LOUVER (See page BO–18)

15. INSTALL FRONT PILLAR GARNISHES

16. INSTALL ASSIST GRIPS

17. INSTALL SUN VISORS AND HOLDERS

18. INSTALL INNER REAR VIEW MIRROR

BO07G–02

REMOVAL

1. REMOVE INNER REAR VIEW MIRROR
2. REMOVE SUN VISORS AND HOLDERS
3. REMOVE ASSIST GRIPS
4. REMOVE QUARTER TRIM (See page BO–40)
5. REMOVE FRONT PILLAR GARNISHES
6. REMOVE COWL LOUVER (See page BO–15)
7. REMOVE WIPER ARMS (See page BO–15)

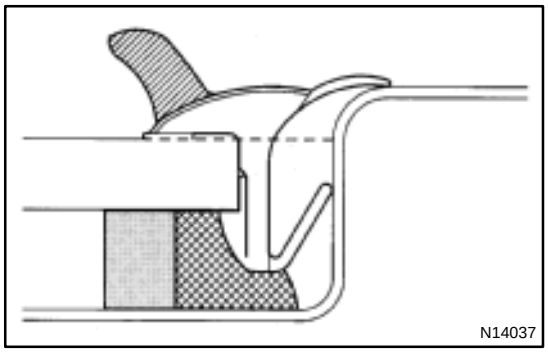
N14037

8. REMOVE WINDSHIELD OUTSIDE UPPER MOULDING

(a) Using a knife, cut off the moulding, as shown in the illustration.

NOTICE:

Do not damage the body with the knife.

(b) Remove the remaining moulding.

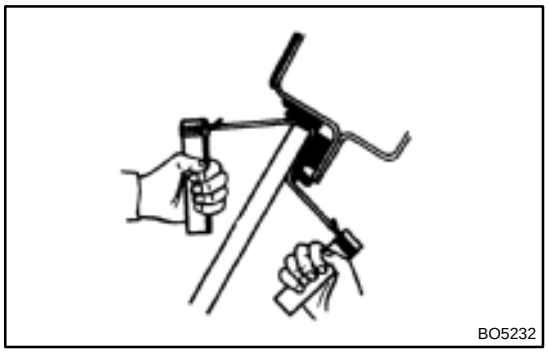
BO5232

9. REMOVE WINDSHIELD GLASS

(a) Push piano wire through between the body and glass from the interior.

(b) Tie both wire ends to a wooden block or similar object.

HINT:

Apply protective tape to the outer surface to keep the surface from being scratched.

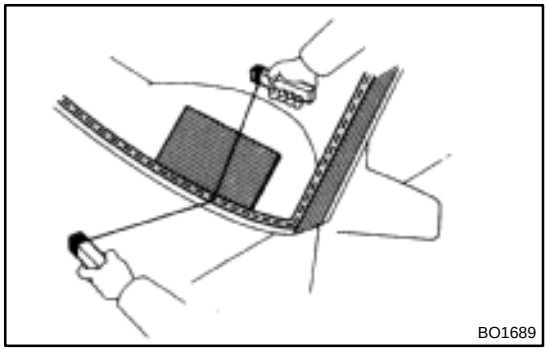
BO1689

NOTICE:

When separating the glass, take care not to damage the paint and interior and exterior ornaments. To prevent scratching the safety pad when removing the windshield, place a plastic sheet between the piano wire and safety pad.

(c) Cut the adhesive by pulling the piano wire around it.

(d) Remove the glass.

NOTICE:

Leave as much of the adhesive on the body as possible when cutting off the glass.

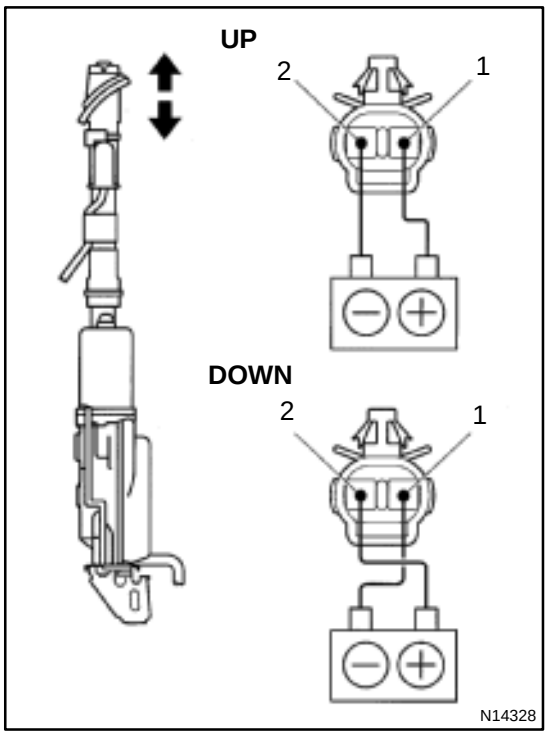

ANTENNA

INSPECTION

BE04L–01

1. Auto Antenna Models:
INSPECT ANTENNA MOTOR

(a) Connect the positive (+) lead from the battery to terminal 1 and the negative (–) lead to terminal 2.

(b) Check that the motor turns (The Antenna moves upward).

NOTICE:

These tests must be done quickly (within 3 – 5 seconds) to prevent the coil from burning out.

(c) Then, reverse the polarity, check that the motor turns the opposite way (The Antenna moves downward).

NOTICE:

These tests must be done quickly (within 3 – 5 seconds) to prevent the coil from burning out.

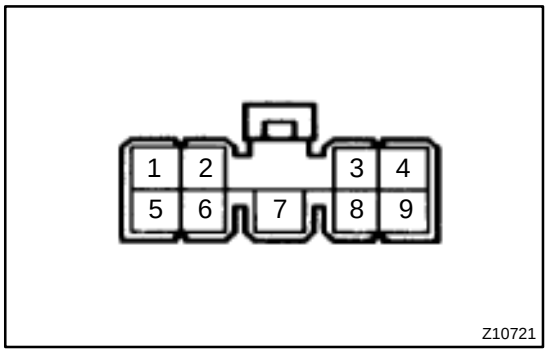

2. Auto Antenna Models:
INSPECT ANTENNA MOTOR CONTROL RELAY CIRCUIT

Disconnect the connector from the relay and inspect the connector on wire harness side, as shown in the chart below.

Tester connection	Condition	Specified condition
1 – 4	Constant	Continuity
3 – Ground	Constant	Continuity
2 – Ground	Constant	Battery positive voltage
5 – Ground	Ignition switch position LOCK or ACC	No voltage
5 – Ground	Ignition switch position ON	Battery positive voltage
6 – Ground	Ignition switch position LOCK	No voltage
6 – Ground	Ignition switch position ACC or ON Radio switch and cassette OFF	No voltage
6 – Ground	Ignition switch position ACC or ON Radio switch and cassette ON	Battery positive voltage
8 – Ground	Ignition switch position LOCK	No voltage
8 – Ground	Ignition switch position ACC or ON Radio switch OFF or cassette ON	No voltage
8 – Ground	Ignition switch position ACC or ON Radio switch ON and cassette OFF	Battery positive voltage
9 – Ground	Ignition switch position LOCK	No voltage
9 – Ground	Ignition switch position LOCK or ACC	Battery positive voltage

BE04M–01

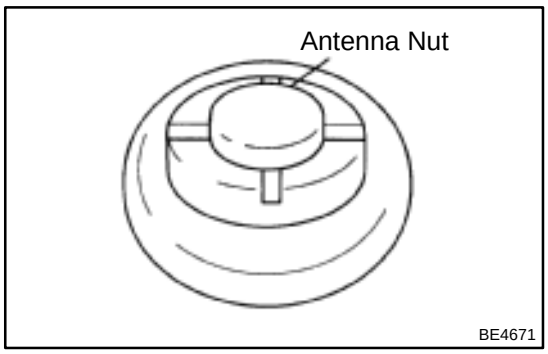

REPLACEMENT

1. Auto Antenna Models:
REMOVE ANTENNA ROD

HINT:

Do this operation with the battery negative (–) cable connected to the battery terminal.

(a) Turn the ignition switch to ”LOCK” position.

(b) Remove the antenna nut.

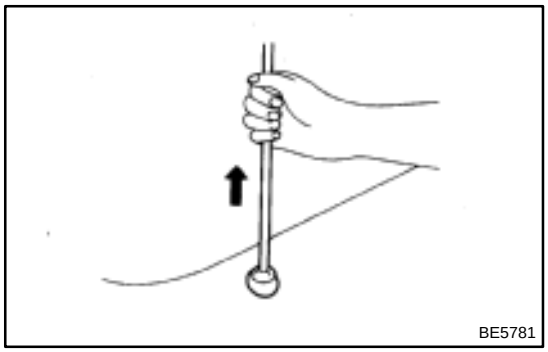

(c) Press the ”AM, FM” buttons on the radio receiver, and simultaneously turn the ignition switch to ”ACC” position.

HINT:

- The rod will extend fully and be released form the motor antenna.
- After removing the antenna rod, leave the ignition switch on ”ACC” position.

NOTICE:

To prevent body damage when the antenna rod is released, hold the rod while it comes out.

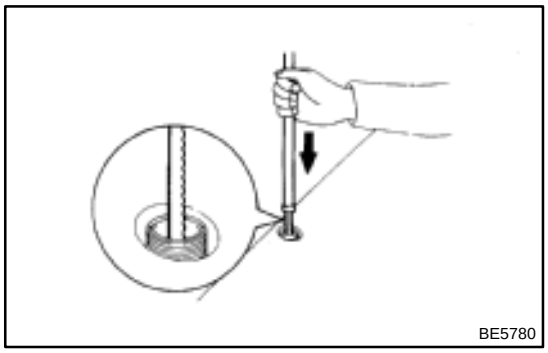

2. Auto Antenna Models:
INSTALL ANTENNA ROD

(a) Insert the cable of the rod until it reaches the bottom.

HINT:

- When inserting the cable, the teeth on the cable must face toward the rear of the vehicle.
- Insert the antenna approx. 300 mm (11.8 in.).

(b) Wind the cable to retract the rod by turning the ignition switch to ”LOCK” position.

HINT:

- If the ignition switch is already in ”LOCK” position, do step 1 (c) first, then turn the ignition switch to ”ACC” position.
- In case the cable is not wound, twist it, as shown in the illustration.
- Even if the rod has not retracted fully, install the antenna nut and inspect the antenna rod operation. It will finally retract fully.

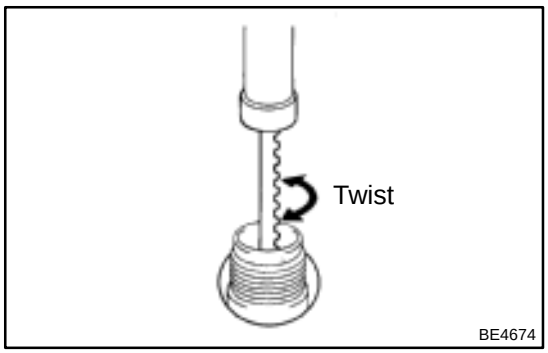

(c) Inspect the antenna rod operation by pressing the radio wave band select buttons.

AUDIO SYSTEM

BE10E–02

DESCRIPTION

1. RADIO WAVE BAND

The radio wave bands used in radio broadcasting are as follows:

Frequency	30 kHz	300 kHz	3 MHz	30 MHz	300 MHz
Designation	LF	MF	HF	VHF	
Radio wave		AM ⟷		FM ⟷	
Modulation	Amplitude modulation			Frequency modulation	

LF: Low Frequency
MF: Medium Frequency
HF: High Frequency
VHF: Very High Frequency

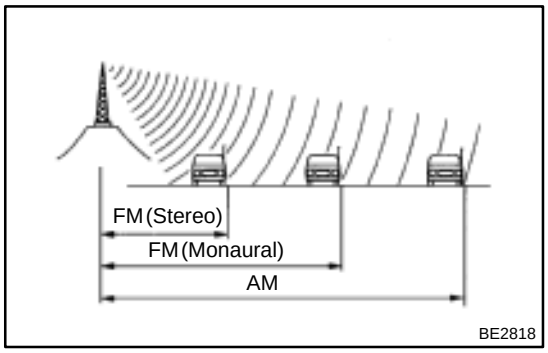

2. SERVICE AREA

There are great differences in the size of the service area for AM and FM monaural. Sometimes FM stereo broadcasts cannot be received even through AM can be received in very clearly.
Not only does FM stereo have the smallest service area, but it also picks up static and other types of interference (”noise”) easily.

3. RECEPTION PROBLEMS

Besides the problem of static, there are also the problems called ”fading”, ”multipath” and ”fade out”. These problems are caused not by electrical noise but by the nature of the radio waves themselves.

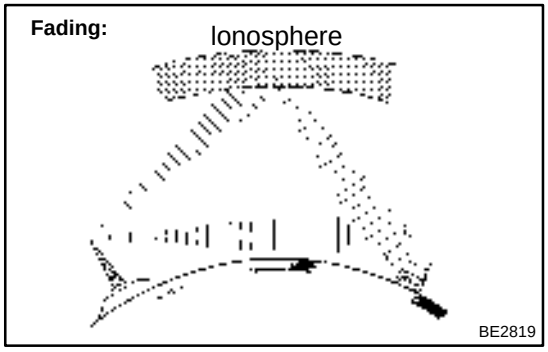

(1) Fading

Besides electrical interference, AM broadcasts are also susceptible to other types of interference, especially at night. This is because AM radio waves bounce off the ionosphere at night. These radio waves then interfere with the signals from the same transmitter that reach the vehicle’s antenna directly. This type of interference is called ”fading”.

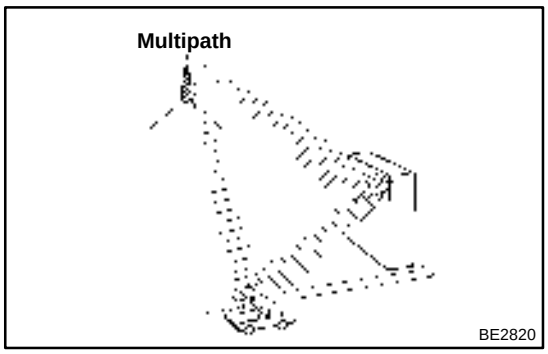

(2) Multipath
One type of interference caused by the bounce of radio waves off of obstructions is called ”multipath”. Multipath occurs when a signal from the broadcast transmitter antenna bounces off buildings and mountains and interferes with the signal that is received directly.

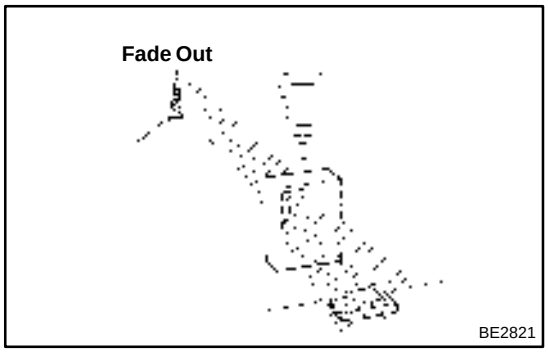

(3) Fade Out
Because FM radio waves are of higher frequencies than AM radio waves, they bounce off buildings, mountains, and other obstructions. For this reason, FM signals often seem to gradually disappear or fade away as the vehicle goes behind a building or other obstruction. This is called ”fade out”.

4. COMPACT DISC PLAYER

Compact Disc Players use a laser beam pick–up to read the digital signals recorded on the CD and reproduce analog signals of the music, etc.

HINT:

Never attempt to disassemble or oil any part of the player unit. Do not insert any object other than a disc into the magazine.

NOTICE:

CD players use an invisible laser beam which could cause hazardous radiation exposure. Be sure to operate the player correctly as instructed.

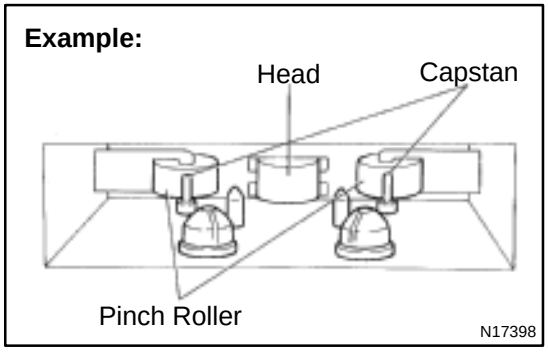

5. Tape player/head cleaning:

MAINTENANCE

(a) Raise the cassette door with your finger.
Next, using a pencil or similar object, push in the guide.

(b) Using a cleaning pen or cotton applicator soaked in cleaner, clean the head surface, pinch rollers and capstans.

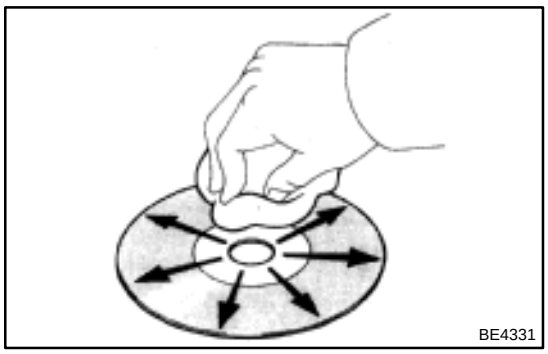

6. CD player/disc cleaning: MAINTENANCE

If the disc gets dirty, clean the disc by wiping the surface from the center to outside in the radial directions with a soft cloth.

NOTICE:

Do not use a conventional record cleaner or anti–static preservative.

7. OUTLINE OF AVC–LAN

(a) What is AVC–LAN?

AVC–LAN is the abbreviation, which stands for Audio Visual Communication–Local Area Network. This is a unified standard co–developed by 6 audio manufactures associated with Toyota Motor Corporation.

The Unified standard covers signals, such as audio signal, visual signal, signal for switch indication and communication signal.

(b) Objectives

Recently the car audio system has been rapidly developed and functions have been changed drastically. The conventional system has been switched to the multi–media type such as a navigation system. At the same time the level of customers needs to audio system has been heightened. This lies behind this standardization.

The concrete objectives are explained below.

- When products by different manufactures were combined together, there used to be a case that malfunction occurred such as sound did not come out. This problem has been resolved by standardization of signals.
- Various types of after market products have been able to add or replace freely.
- Thanks to the above (2), each manufacture has become able to concentrate on developing products in their strongest field. This has enabled many types of products provided inexpensively.
- Conventionally, a new product developed by a manufacture could not be used due to a lack of compatibility with other manufactures products. Thanks to this new standard, users can enjoy compatible products provided for them timely.

(c) The above descriptions are the objectives to introduce AVC–LAN. By this standardization, development of new products will no longer cause systematic errors. Thus, this is very effective standard for a product in the future.

HINT:

- When +B short or GND short is detected in AVC–LAN circuit, communication stops. Accordingly the audio system does not function normally.
- When audio system is not equipped with a navigation system, audio head unit is the master unit.
- The car audio system using AVC–LAN circuit has a diagnosis function.
- Each product has its own specified numbers called physical address. Numbers are also allotted to each function in one product, which are called logical address.

BE04K–02

LOCATION

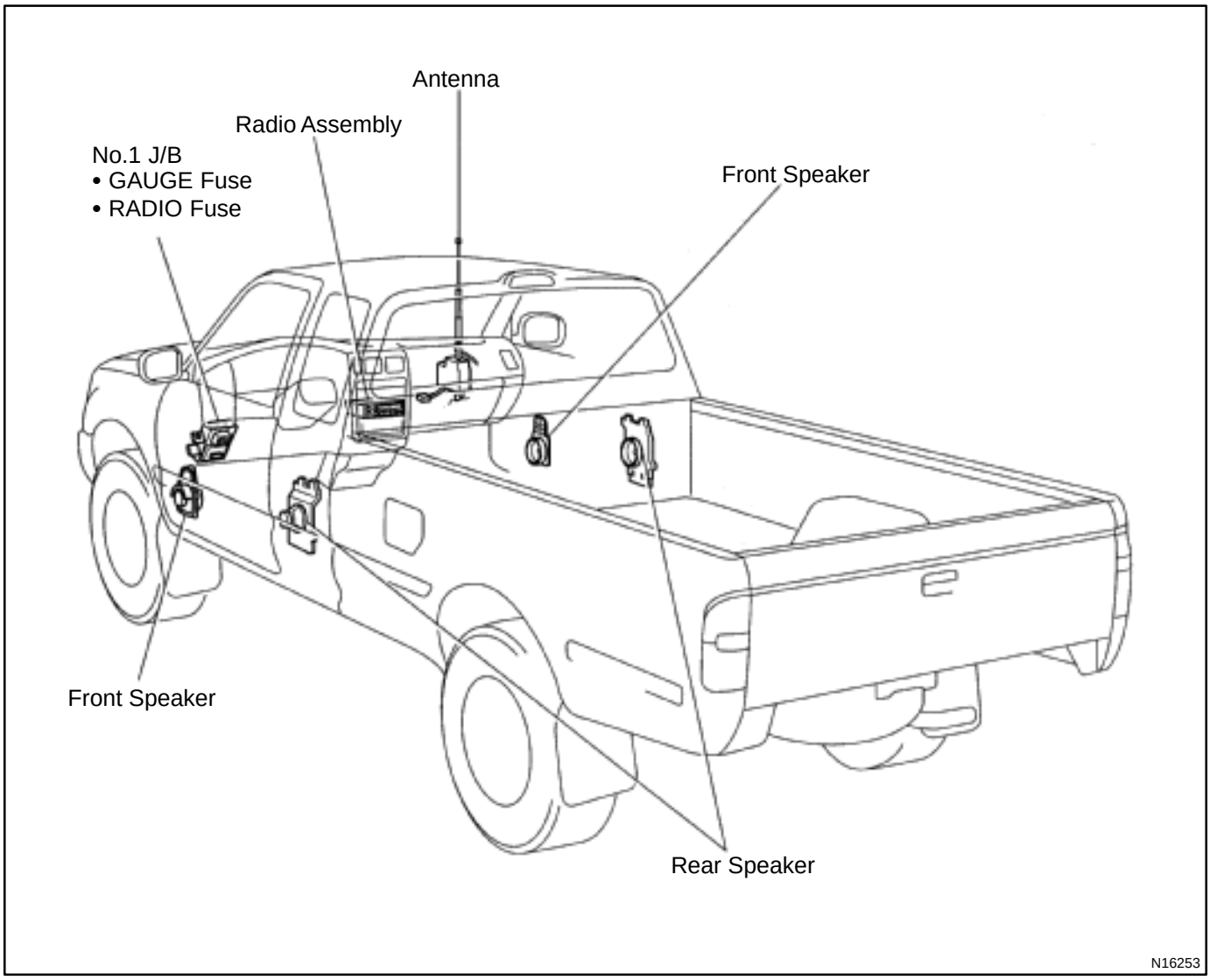

BE10F–02

TROUBLESHOOTING

1. DIAGNOSIS FUNCTION

Error codes over tuner and connected equipment are displayed on the screen of tuner.

(a) Diagnosis start–up

For shifting to diagnosis mode, push ”CD” button 3 times with pressing ”1” and ”6” of TRAC TUNE APS button at the same time while the audio power is OFF and ACC is ON.

In diagnosis mode, by pressing ”CD” button for 2 seconds or turning the ignition key OFF, the diagnosis mode is released.

<Example>

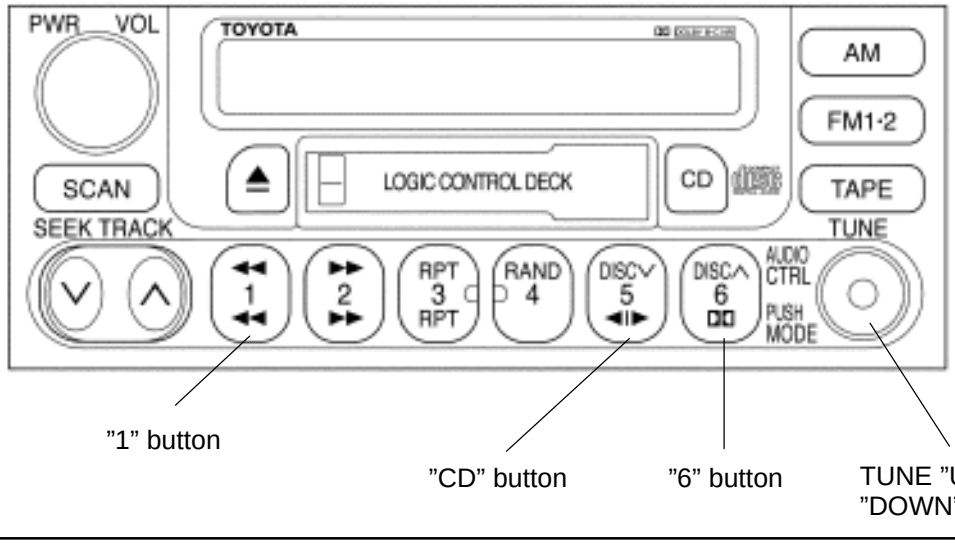

I12512

(b) LAN check

When starting up the diagnosis mode, the mode turns to LAN check mode, the screen displays the code numbers (physical address) of tuner and connected equipment. Smaller codes are displayed in order, displayed code numbers are switched by operating TUNE ”UP” or TUNE ”DOWN” button. In LAN check mode, by pressing ”5” of TRAC TUNE APS button for more than 2 secs., diagnosis memory of each equipment can be deleted, when deletion is completed, the mode returns to LAN check mode.

Code No. (physical address) List

Code No.	Equipmentname
190	Radio receiver assembly (Audio head unit)

(c) System check

When pressing ”1” of TRAC TUNE APS button in LAN check mode, the mode turns to the system check mode, the system performs self diagnosis of connected equipment and displays the results. The smaller code numbers (physical address) are displayed in order (code No. (physical address), diagnosis code, support code of diagnosis code (object equipment)). When no error is detected in the system, ”00” is displayed. When an error code is detected, up to 6 codes per one system are displayed. Pressing TUNE ”UP” or TUNE ”DOWN” switches the display. In the system check mode, when pressing ”6” of TRAC TUNE APS button the mode returns to LAN check mode.

(d) Diagnosis memory
In LAN check mode, when pressing ”2” of TRAC TUNE APS button the mode turns to the diagnosis memory mode. The results of self diagnosis performed over tuner and connected equipment are memorized and displayed. The smaller code numbers (physical address) are displayed in order (code No. (physical address), periodic communication number when error occurs, diagnosis code, and support code of diagnosis code (object equipment)). When no error is detected in the system, ”00” is displayed. When an error code is detected, up to 6 codes per one system are displayed. Pressing TUNE ”UP” or TUNE ”DOWN” switches the display. Each diagnosis code is same as code in the system check mode. When pressing ”6” of TRAC TUNE APS button, the mode returns to LAN check mode.

2. DIAGNOSIS CODE LIST

Parts Name	DTC	Diagnosis item	Diagnosis content	Countermeasure and inspected parts	System Check	Diagnosis memory
Head Unit	41	AM tuner error	There is an error in AM tuner.	Radio receiver check.	X	○
	42	FM tuner error	There is an error in FM tuner.		X	○
	50	Cassette error	There is an error in cassette deck.		X	○
	D1	Transmitter error	An error occurs during transmitting a signal from head unit to the system.	Radio receiver check. Wire harness and connecter check.	○	○
	D4	AVC–LAN Periodic communication no response	Radio receiver does not respond to periodic communication.	Radio receiver check.	X	○
	FF	Diagnosis no response	Result of diagnosis is not issued from start to finish.		○	X

NOTICE:

When replacing the internal mechanism (computer part) of the audio system, be careful that no part of your body or clothing comes in contact with the terminals of the leads from the IC, etc. of the replacement part (spare part).

HINT:

This inspection procedure is a simple troubleshooting which should be carried out on the vehicle during system operation and was prepared on the assumption of system component troubles (except for the wires and connectors, etc.).

Always inspect the trouble taking the following items into consideration.

- Open or short circuit of the wire harness
- Connector or terminal connection fault

	Problem	No.
Radio	No power coming in.	1
	Power coming in, but radio not operating.	2
	Noise present, but AM – FM not operating.	3
	Either speaker does not work.	4
	Either AM or FM does not work.	5
	Reception poor (Volume faint).	5
	Few preset tuning bands.	5
	Sound quality poor.	6
	Cannot set station select button.	7
	Preset memory disappears.	7
Tape Player	Cassette tape cannot be inserted.	8
	Cassette tape is inserted, but no power.	9
	Power coming in, but tape player not operating.	10
	Either speakers does not work.	11
	Sound quality poor (Volume faint).	12
	Tape jammed, malfunction with tape speed or auto–reverse.	13
	APS, SKIP, RPT buttons not operating.	14
	Cassette tape will not be ejected.	15
CD Player	CD cannot be inserted.	16
	CD inserted but no power.	17
	Power coming in, but CD player not operating.	18
	Sound jumps.	19
	Sound quality poor (Volume faint).	20
	Either speaker does not work.	21
	CD will not be ejected.	22
Antenna	Antenna does not fully extend or fully retract.	23
	Antenna – related.	24
Noise	Noise produced by vibration or shock while driving.	25
	Noise produced when engine starts.	26

The term ”AM” includes LW, MW and the term ”FM” includes UKW.

1	Radio	NO POWER COMING IN

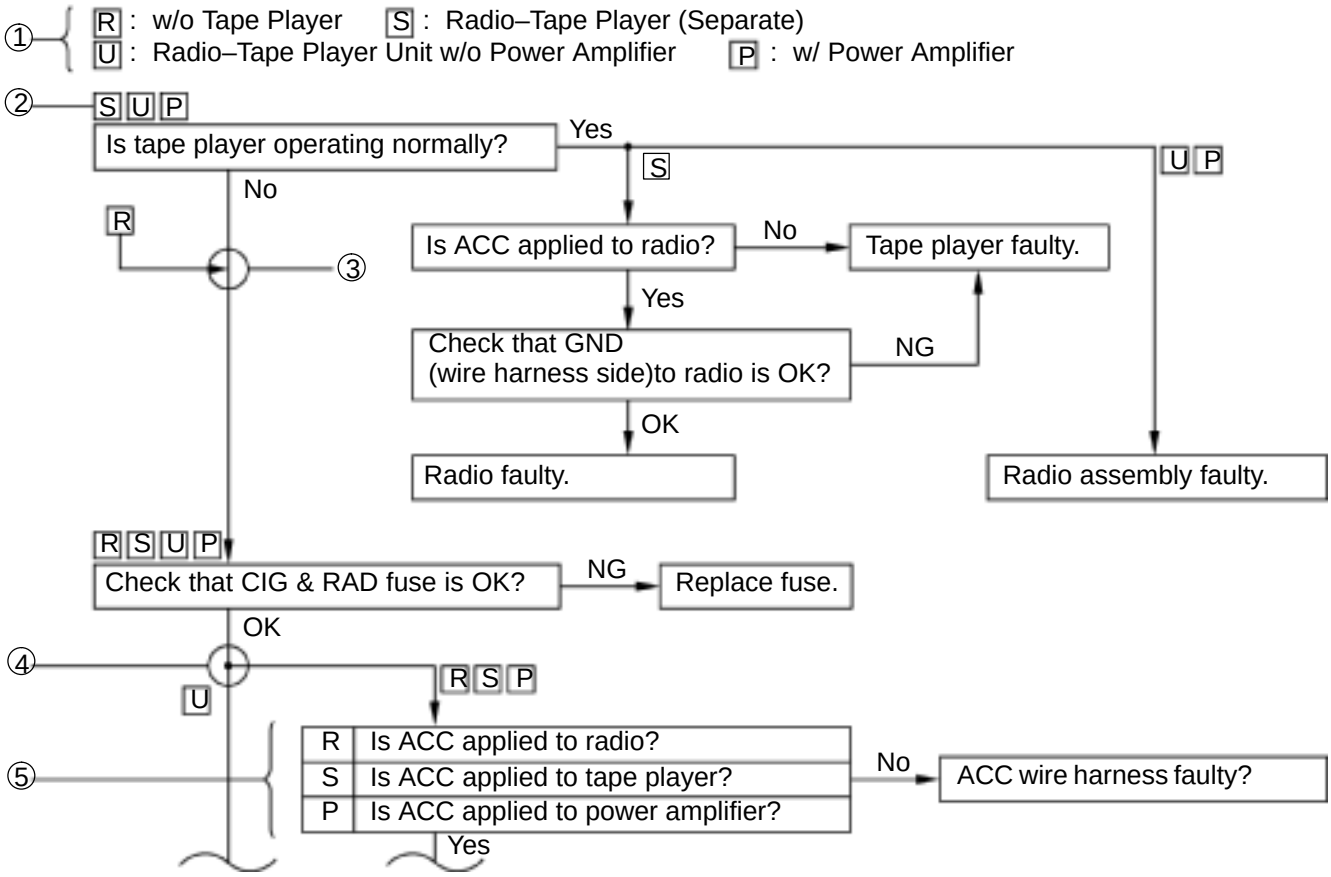

① Audio system type and symbol used.
HINT :
Check the applicable type of audio system.

② Symbol for type of audio system the question applies to.
HINT :
If the audio system type is not applicable, proceed to next question below.

③ Junction without black circle.
HINT :
Proceed to next question below.

④ Junction with black circle.
HINT :
Proceed to question for applicable audio system type.

⑤ HINT :
Select question for applicable audio system type.

I01419

1	Radio	NO POWER COMING IN

R : Radio U : Radio–Tape Player Unit

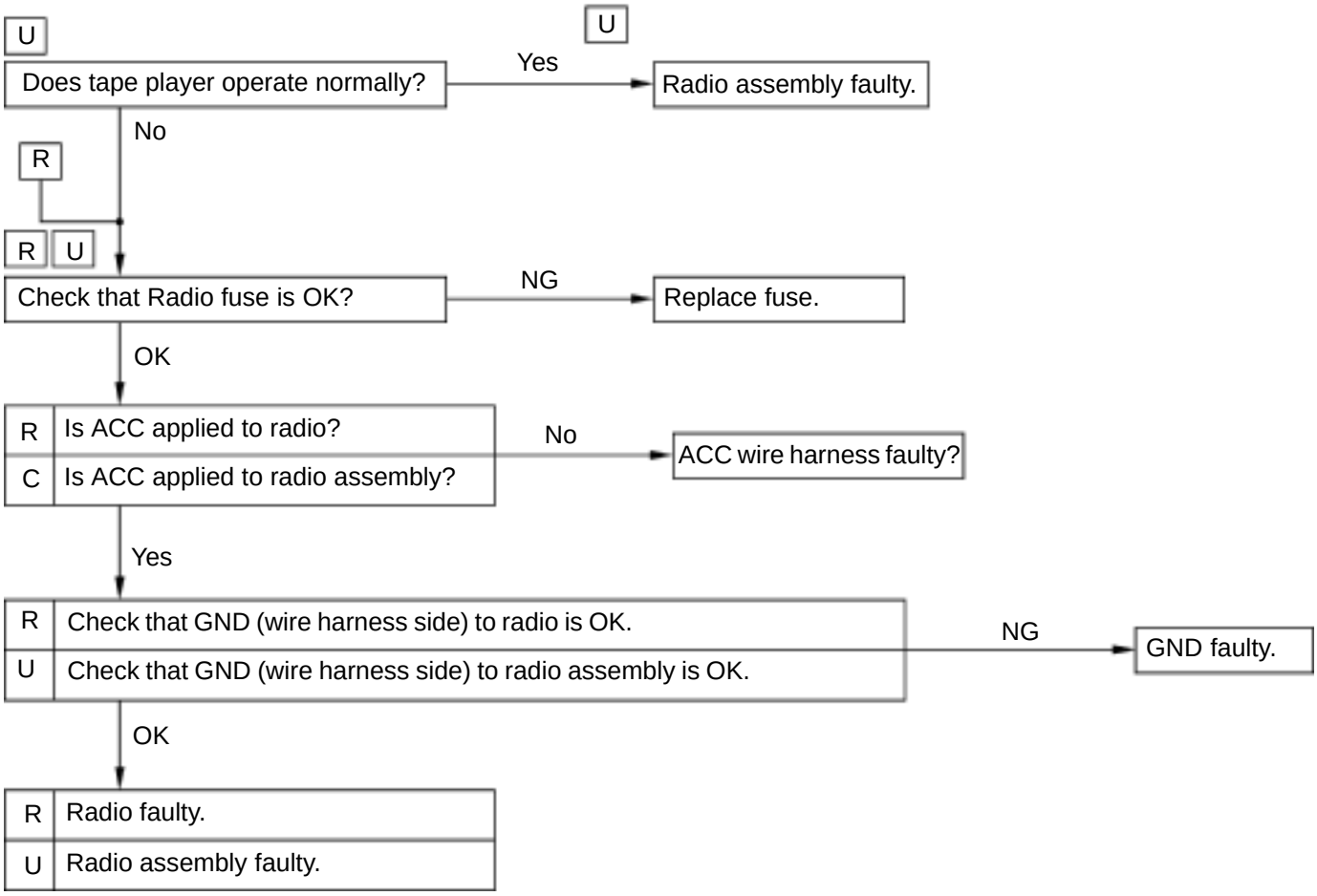

I01420

2	Radio	POWER COMING IN, BUT RADIO NOT OPERATING

R : Radio U : Radio–Tape Player Unit

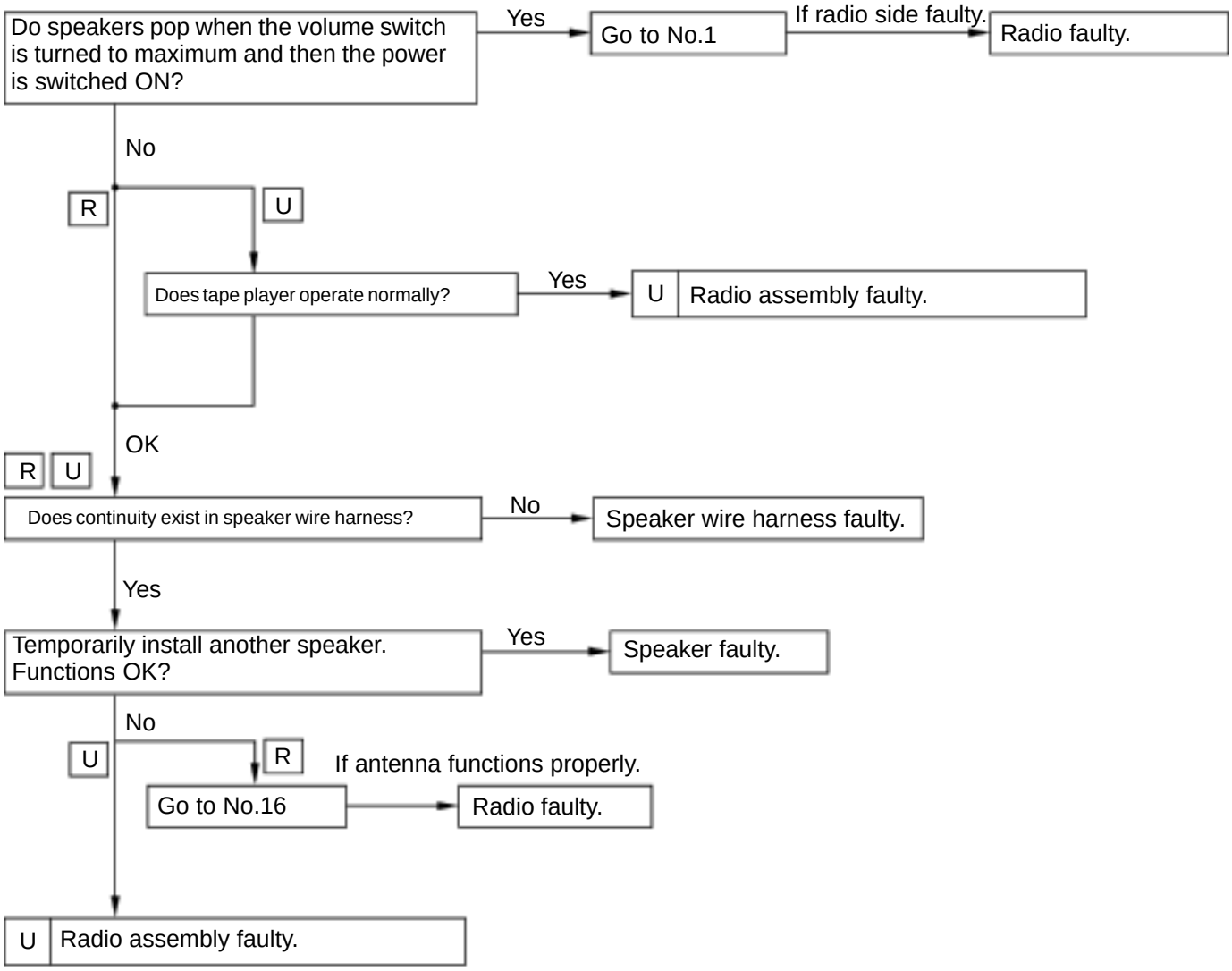

3	Radio	NOISE PRESENT, BUT AM–FM NOT OPERATING

R : Radio U : Radio–Tape Player Unit

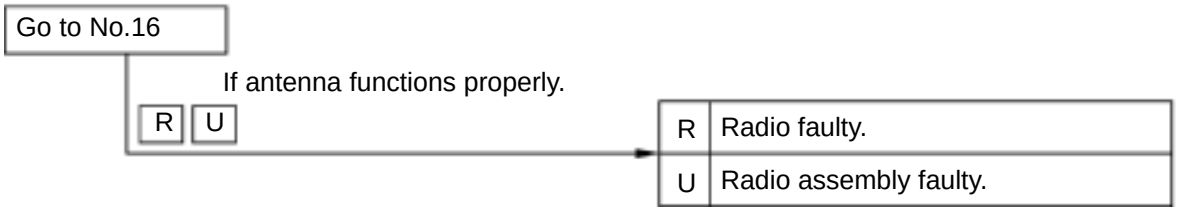

I01421

4	Radio	EITHER SPEAKER DOES NOT WORK

R : Radio U : Radio–Tape Player Unit

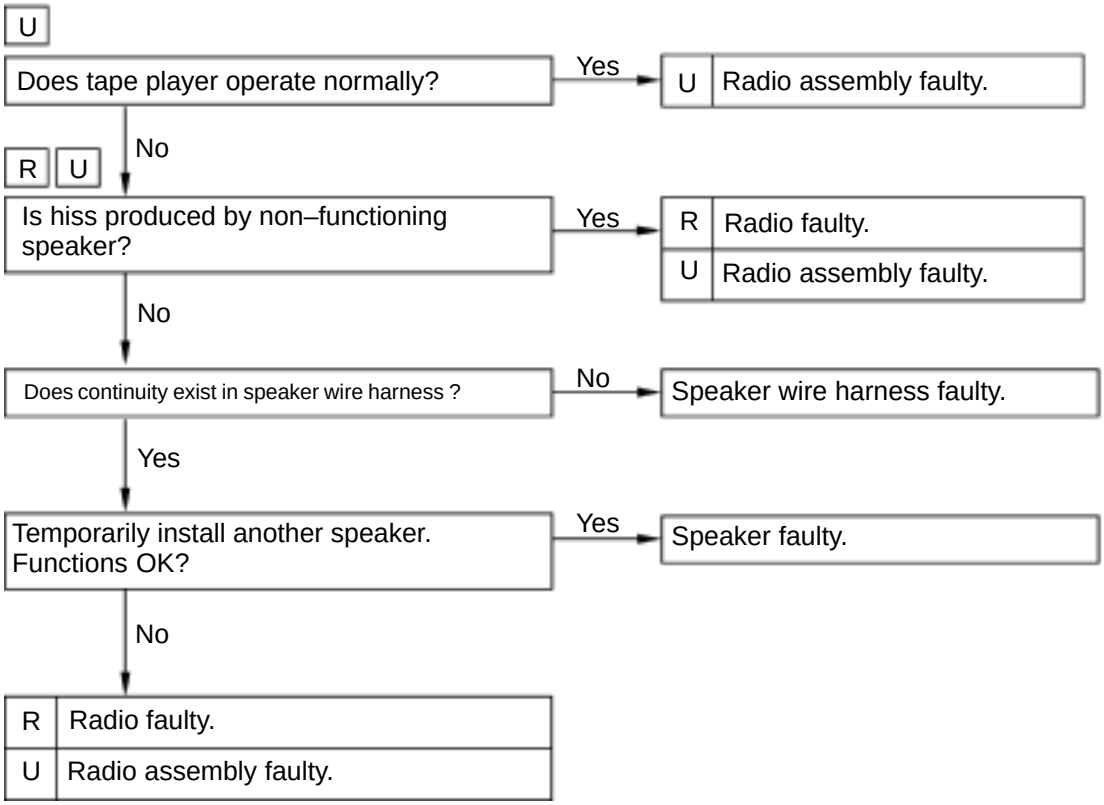

I01422

5	**Radio**	**EITHER AM OR FM DOES NOT WORK, RECEPTION POOR (VOLUME FAINT), FEW PRESET TUNING BANDS**

R : Radio U : Radio–Tape Player Unit

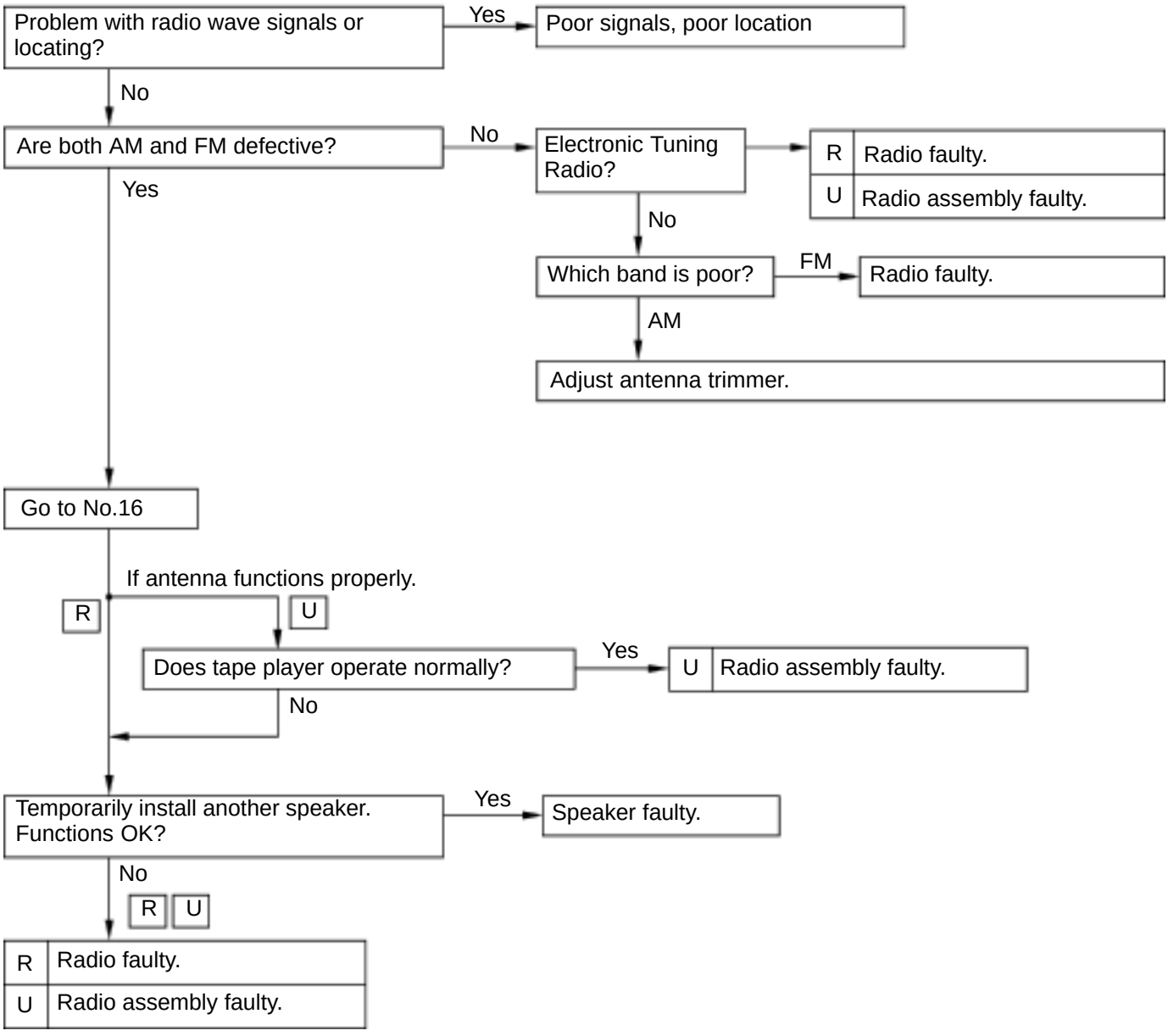

I01423

6	Radio	SOUND QUALITY POOR

R : Radio U : Radio–Tape Player Unit

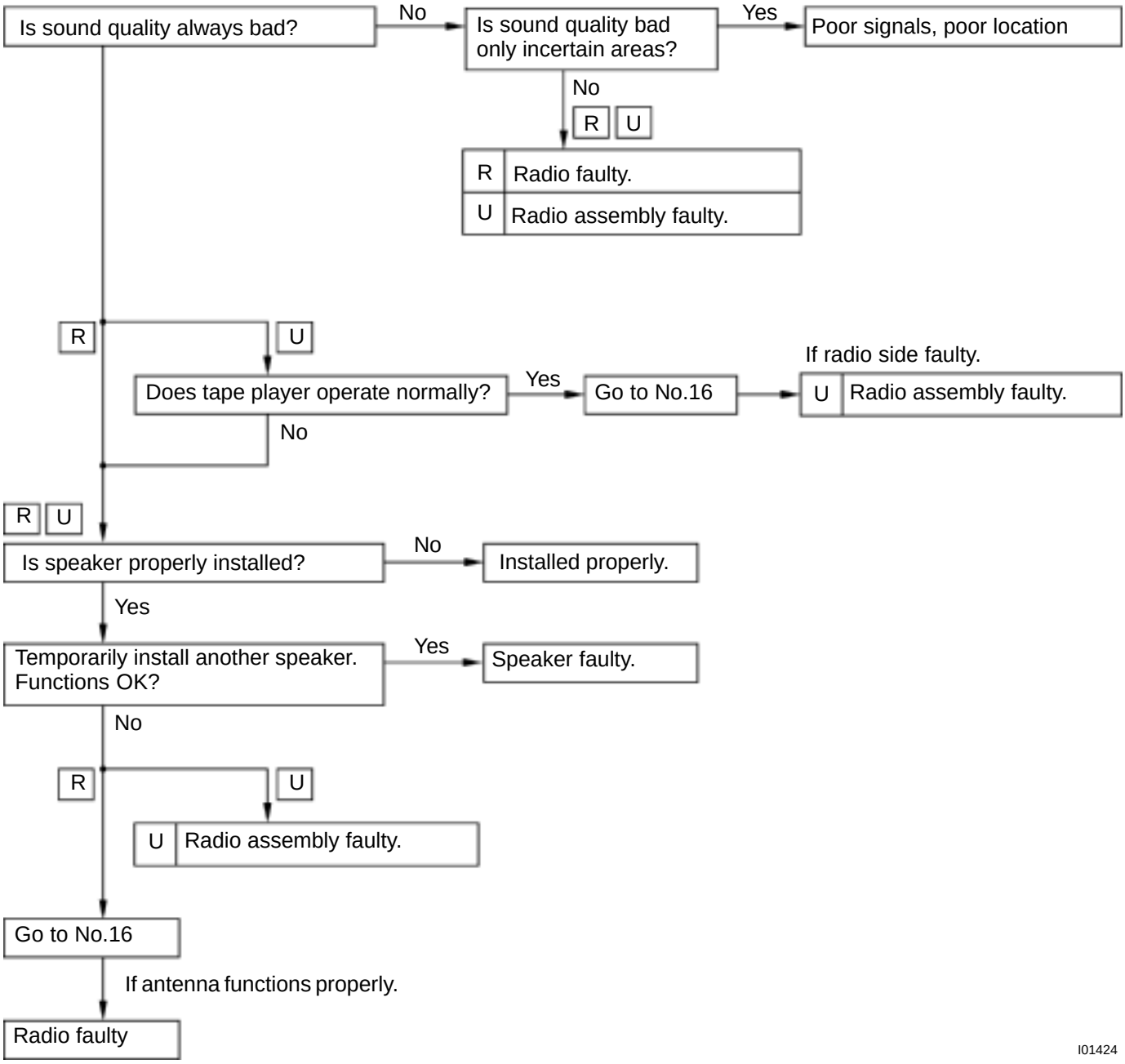

I01424

7	Radio	CANNOT SET STATION SELECT BUTTON, PRESET MEMORY DISAPPEARS

R : Radio U : Radio–Tape Player Unit

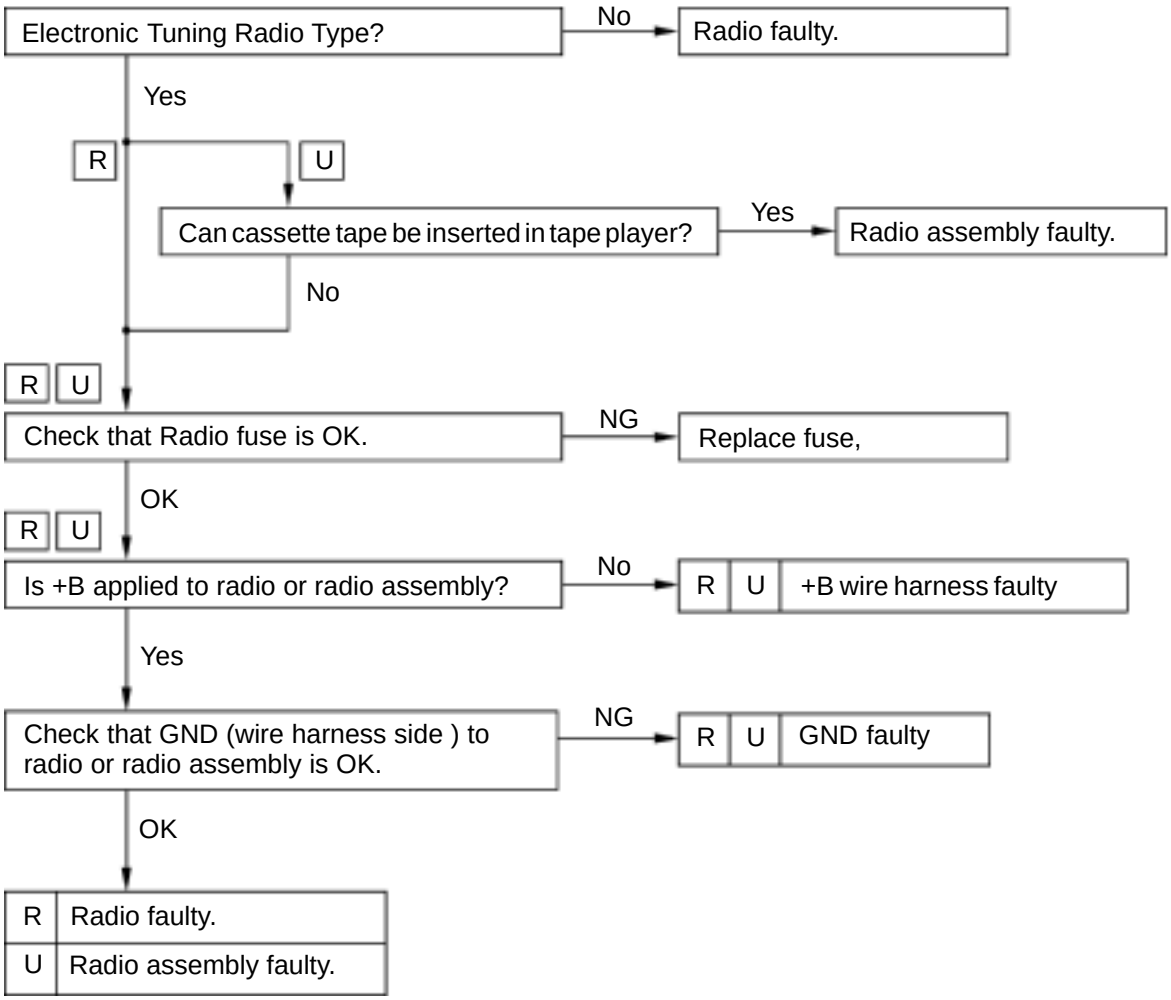

I01425

8	Tape Player	CASSETTE TAPE CANNOT BE INSERTED

U : Radio–Tape Player Unit

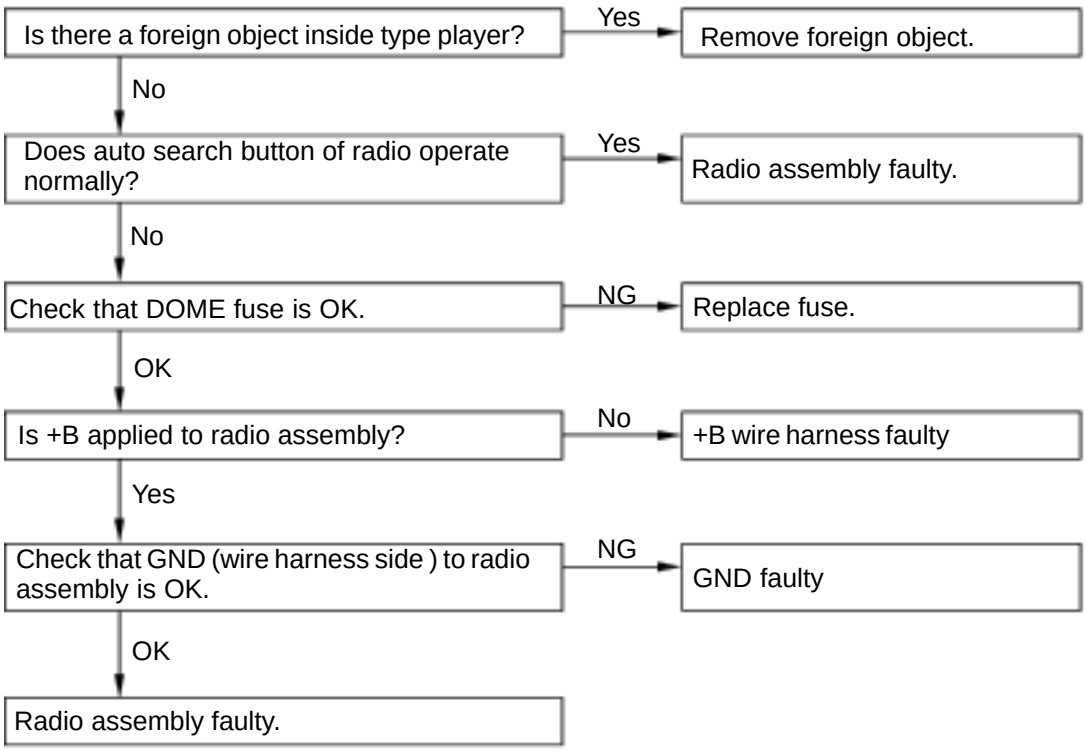

9	Tape Player	CASSETTE TAPE IS INSERTED, BUT NO POWER

U : Radio–Tape Player Unit

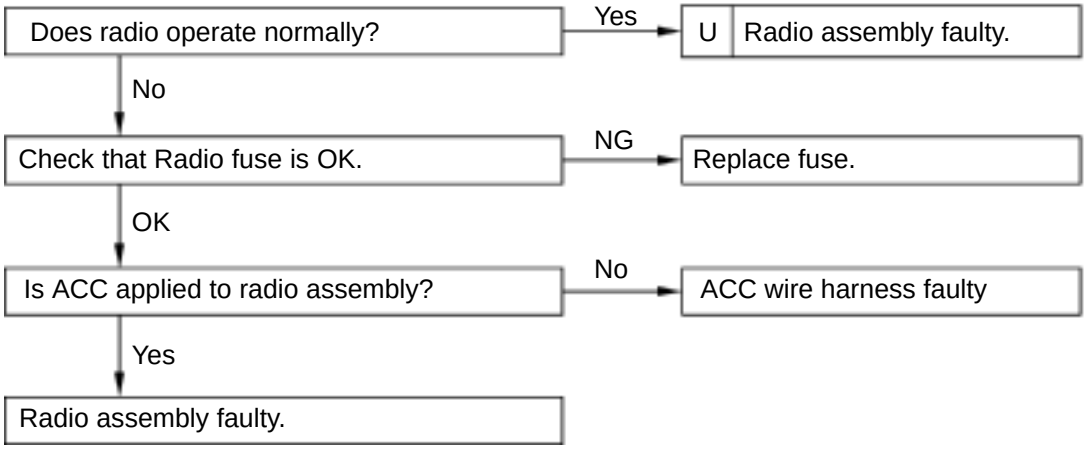

I01426

10	**Tape Player**	**POWER COMING IN, BUT TAPE PLAYER NOT OPERATING**

U : Radio–Tape Player Unit

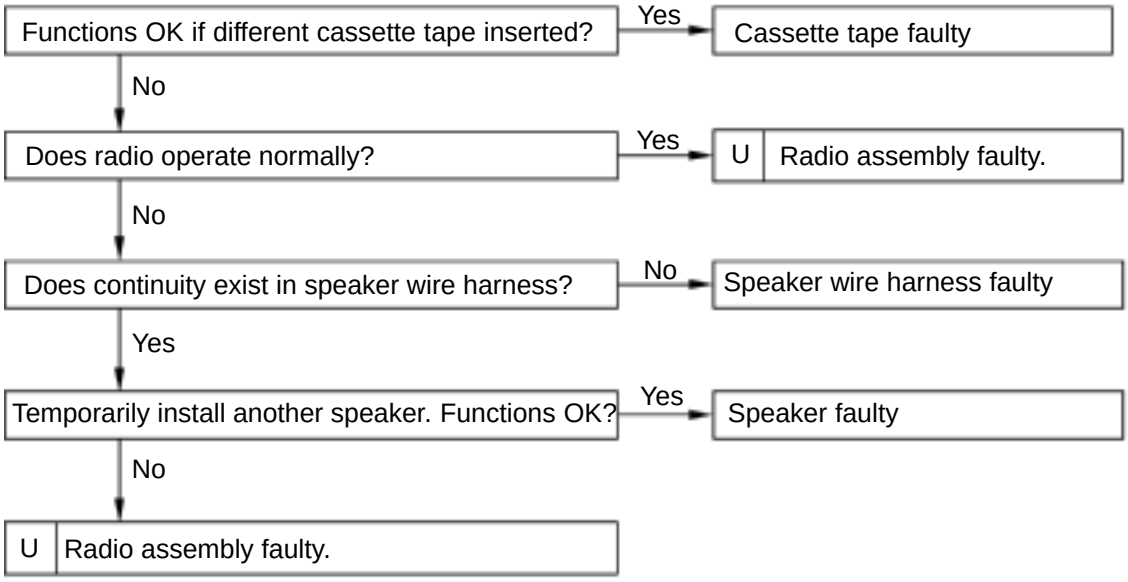

11	**Tape Player**	**EITHER SPEAKER DOES NOT WORK**

U : Radio–Tape Player Unit

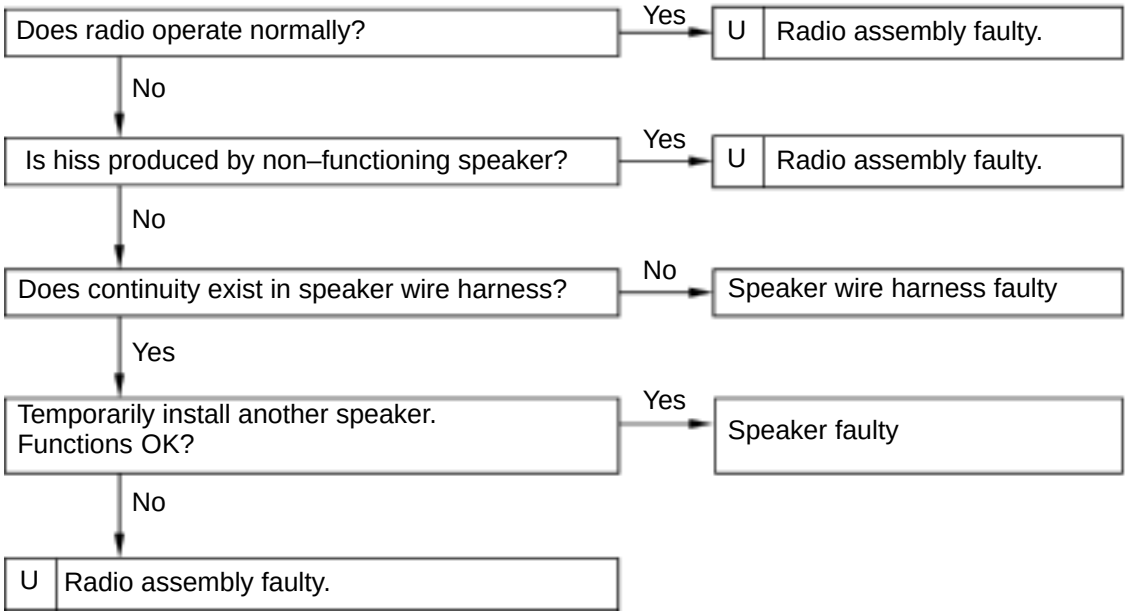

I01427

12	Tape Player	SOUND QUALITY POOR (VOLUME FAINT)

U : Radio–Tape Player Unit

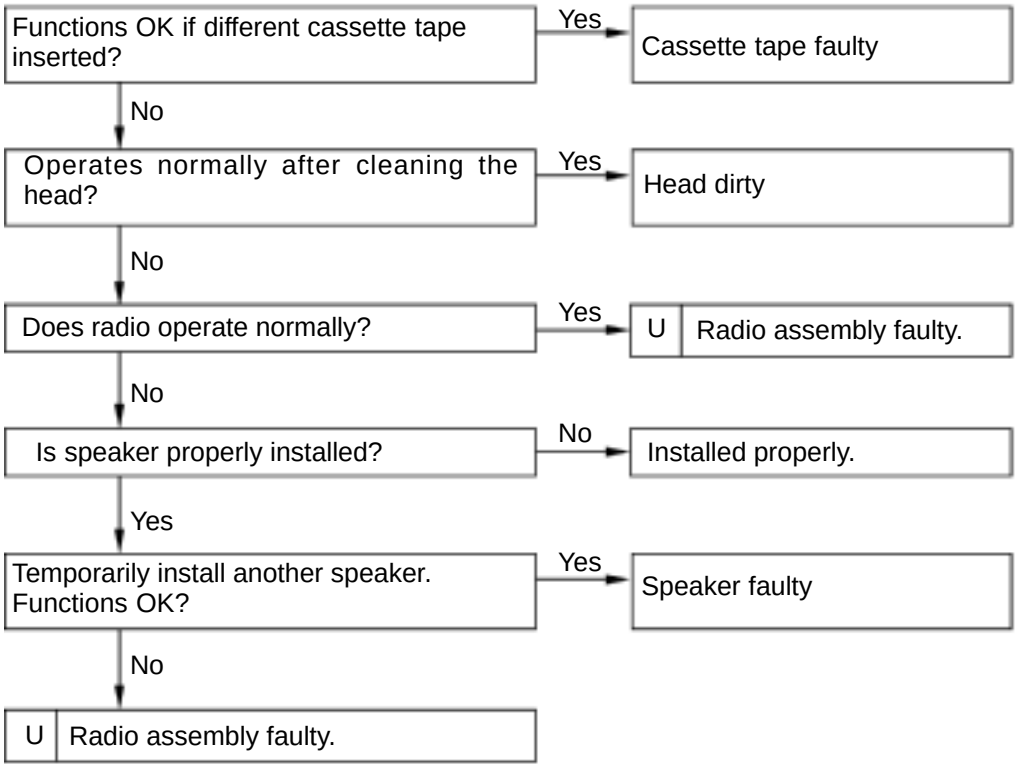

13	Tape Player	TAPE JAMMED, MALFUNCTION WITH TAPE SPEED OR AUTO– REVERSE

U : Radio–Tape Player Unit

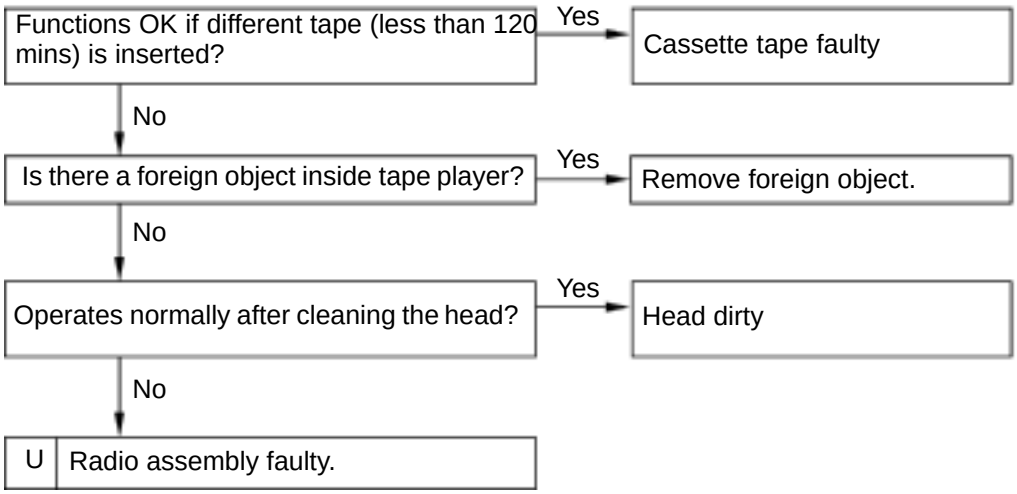

I01428

14	**Tape Player**	**APS, SKIP, RPT BUTTONS NOT OPERATING**

Functions OK if different cassette tape inserted? → No → Radio assembly faulty.

↓ Yes

Cassette tape faulty (Silence of less than 3 secs between songs (APS, RPT). Silence of less than 15 secs (SKIP).

15	**Tape Player**	**CASSETTE TAPE WILL NOT BE EJECTED**

U : Radio–Tape Player Unit

Does tape player operate normally? → No → Cassette tape jammed

↓ Yes

Is auto search button of radio operating normally? → Yes → Radio assembly faulty

↓ No

Check if Radio fuse is OK. → NG → Replace fuse.

↓ OK

Is +B applied to radio assembly? → No → +B wire harness faulty

↓ Yes

Radio assembly faulty

I01429

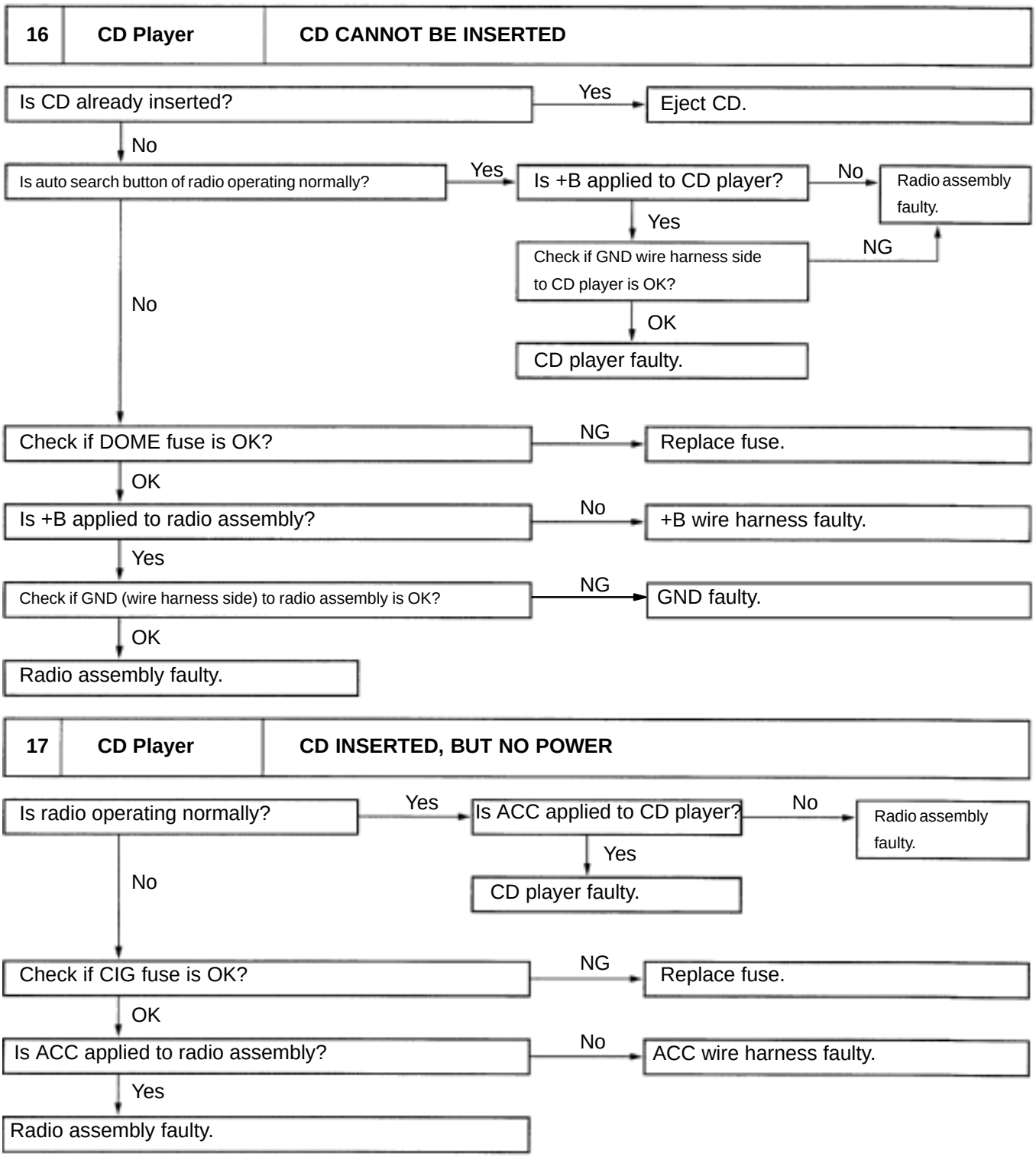
16
CD Player
CD CANNOT BE INSERTED
Is CD already inserted?
Yes
Eject CD.
No
Is auto search button of radio operating normally?
Yes
Is +B applied to CD player?
No
Radio assembly faulty.
Yes
Check if GND wire harness side to CD player is OK?
NG
OK
CD player faulty.
No
Check if DOME fuse is OK?
NG
Replace fuse.
OK
Is +B applied to radio assembly?
No
+B wire harness faulty.
Yes
Check if GND (wire harness side) to radio assembly is OK?
NG
GND faulty.
OK
Radio assembly faulty.
17
CD Player
CD INSERTED, BUT NO POWER
Is radio operating normally?
Yes
Is ACC applied to CD player?
No
Radio assembly faulty.
Yes
CD player faulty.
No
Check if CIG fuse is OK?
NG
Replace fuse.
OK
Is ACC applied to radio assembly?
No
ACC wire harness faulty.
Yes
Radio assembly faulty.

I05488

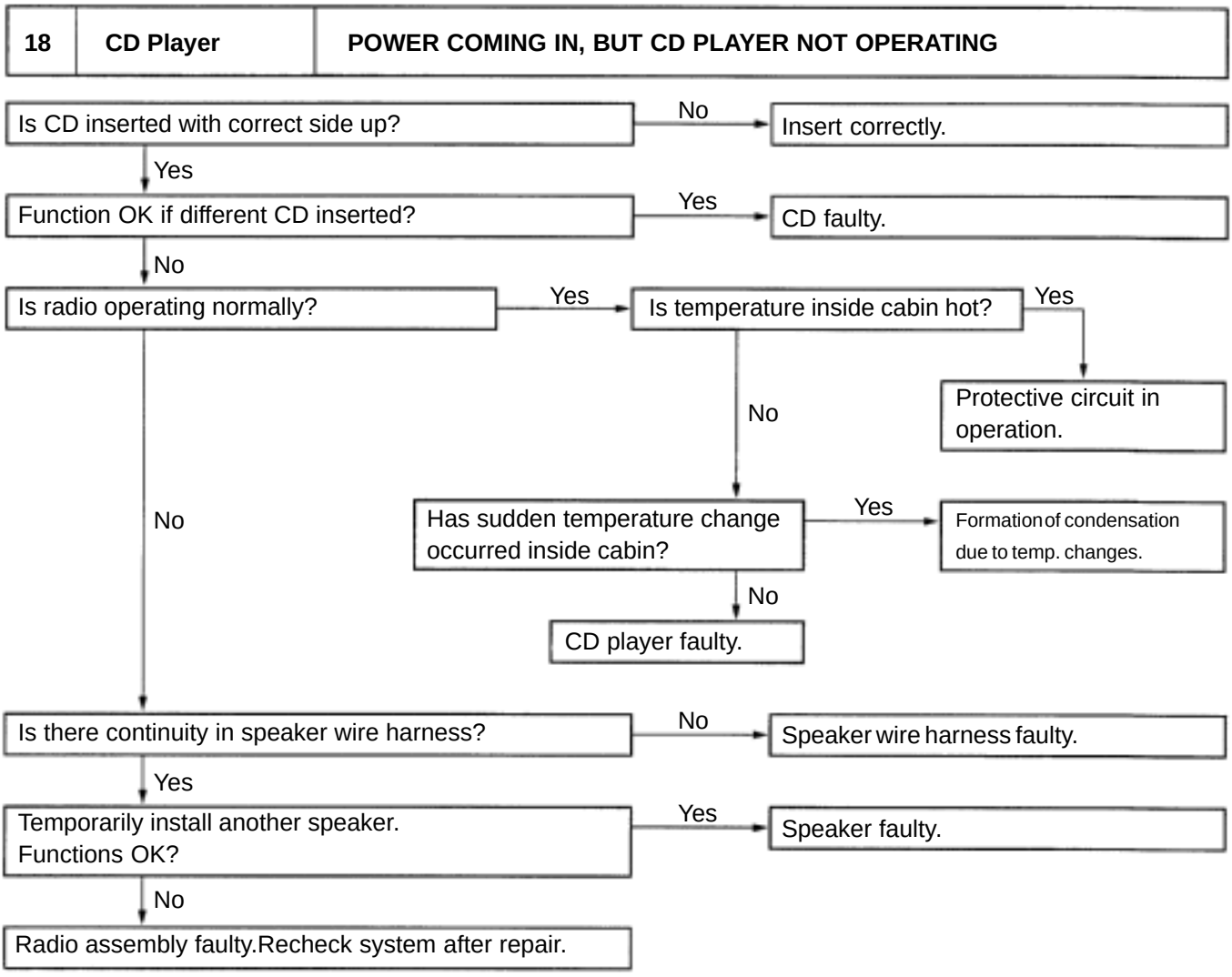
18
CD Player
POWER COMING IN, BUT CD PLAYER NOT OPERATING
Is CD inserted with correct side up?
No
Insert correctly.
Yes
Function OK if different CD inserted?
Yes
CD faulty.
No
Is radio operating normally?
Yes
Is temperature inside cabin hot?
Yes
Protective circuit in operation.
No
No
Has sudden temperature change occurred inside cabin?
Yes
Formation of condensation due to temp. changes.
No
CD player faulty.
Is there continuity in speaker wire harness?
No
Speaker wire harness faulty.
Yes
Temporarily install another speaker. Functions OK?
Yes
Speaker faulty.
No
Radio assembly faulty.Recheck system after repair.

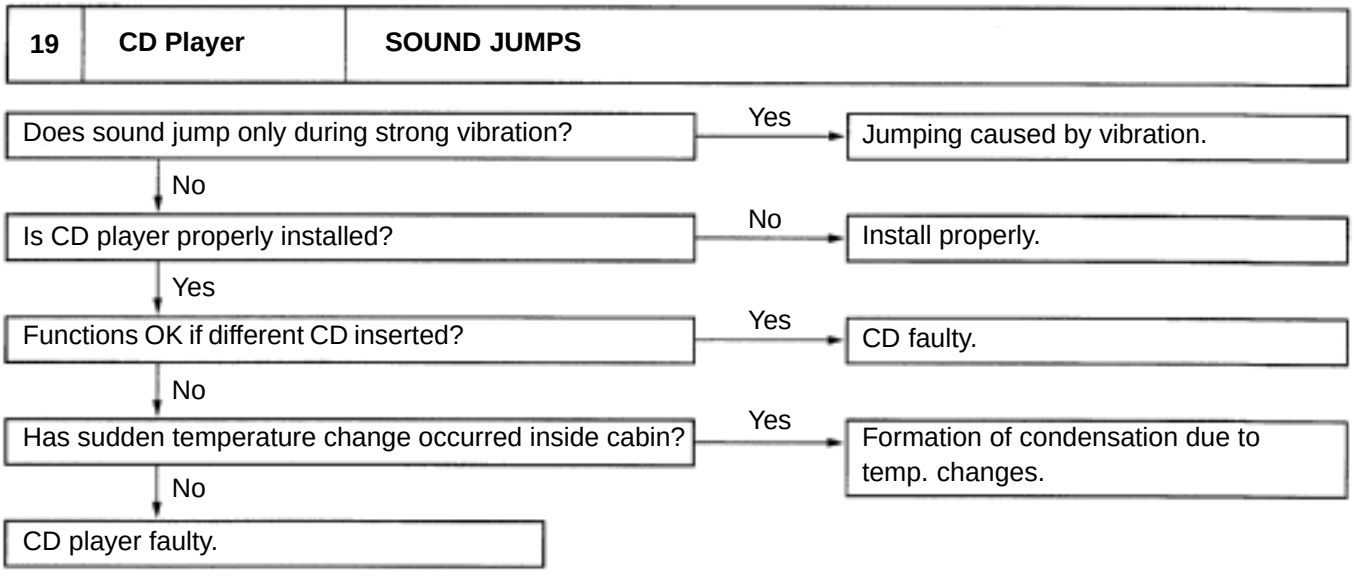
19
CD Player
SOUND JUMPS
Does sound jump only during strong vibration?
Yes
Jumping caused by vibration.
No
Is CD player properly installed?
No
Install properly.
Yes
Functions OK if different CD inserted?
Yes
CD faulty.
No
Has sudden temperature change occurred inside cabin?
Yes
Formation of condensation due to temp. changes.
No
CD player faulty.

I10243

20	CD Player	SOUND QUALITY POOR (VOLUME FAINT)

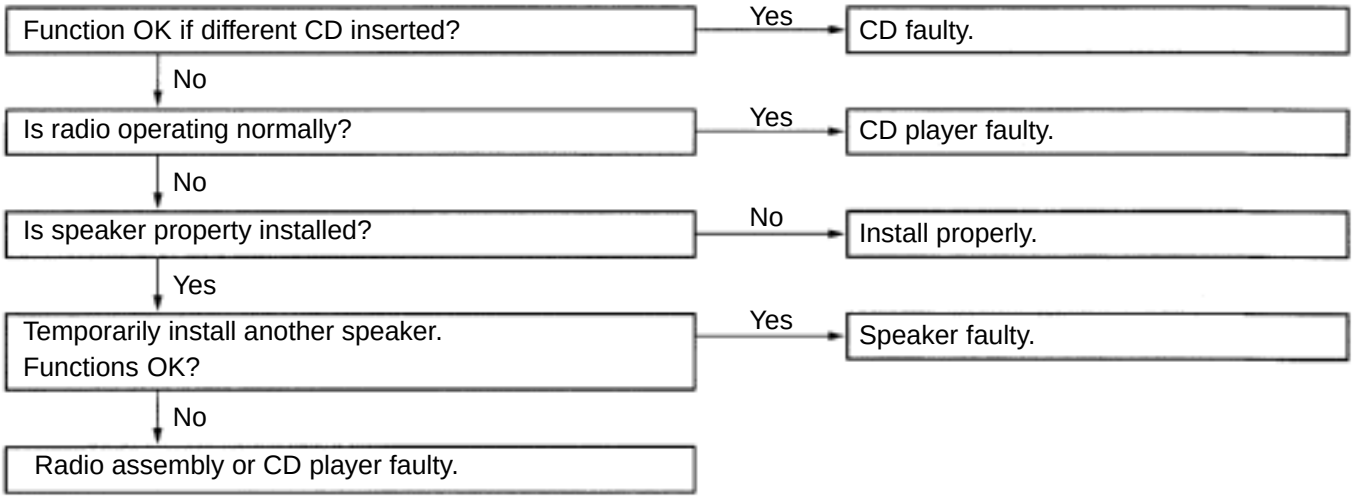

21	CD Player	EITHER SPEAKER DOES NOT WORK

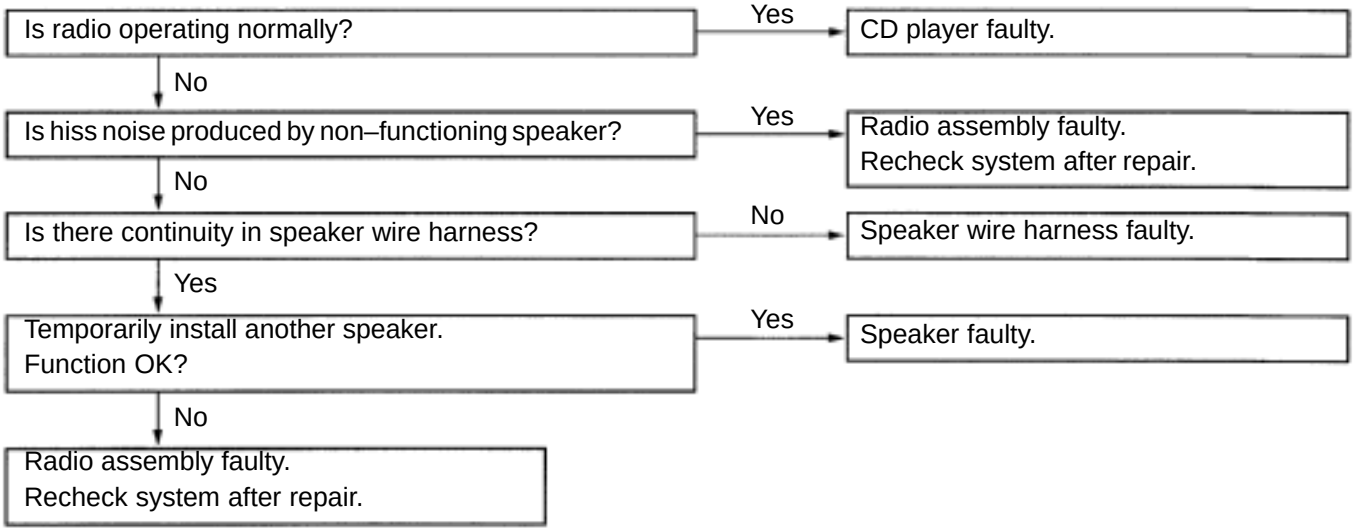

V08551

22	CD Player	CD WILL NOT BE EJECTED

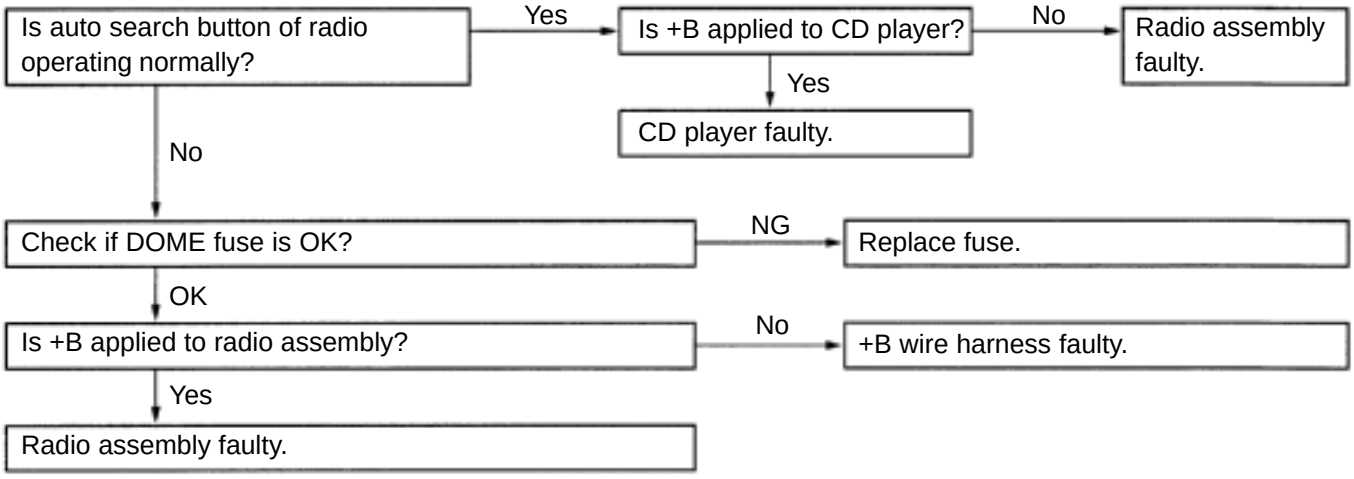

I05490

23	Tape Player	ANTENNA DOES NOT FULLY EXTEND OR FULLY RETRACT

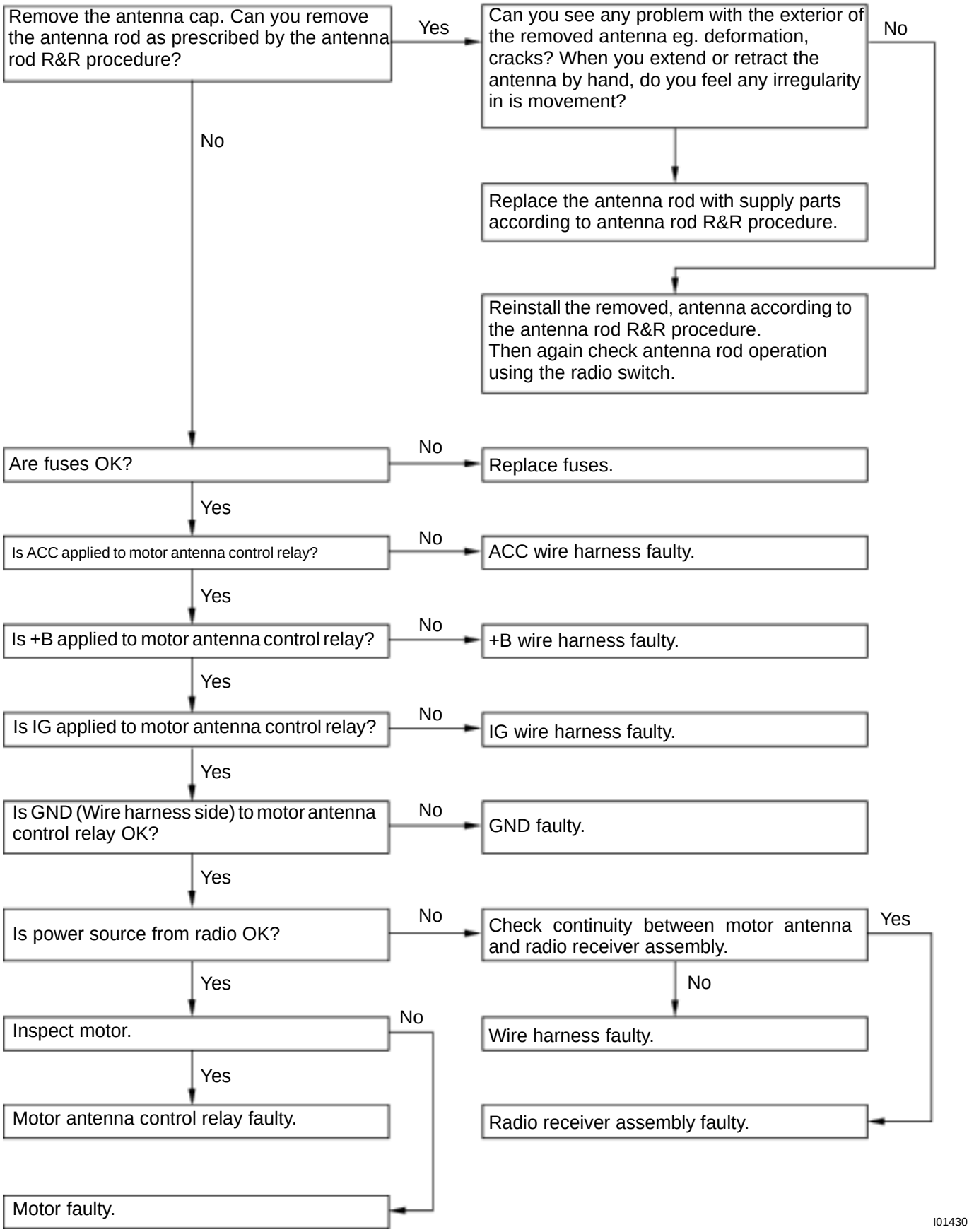

I01430

24	Antenna	ANTENNA–RELATED

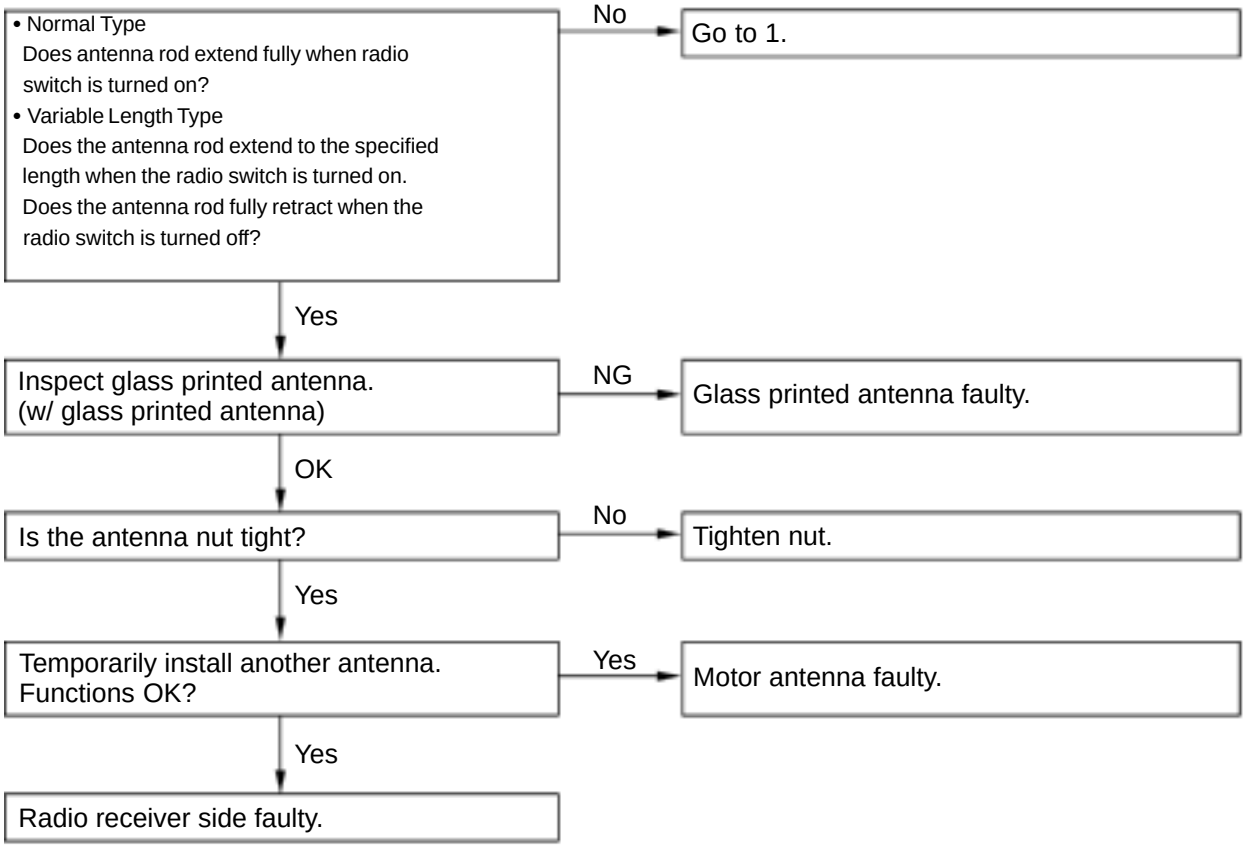

25	Noise	NOISE PRODUCED BY VIBRATION OR SHOCK WHILE DRIVING

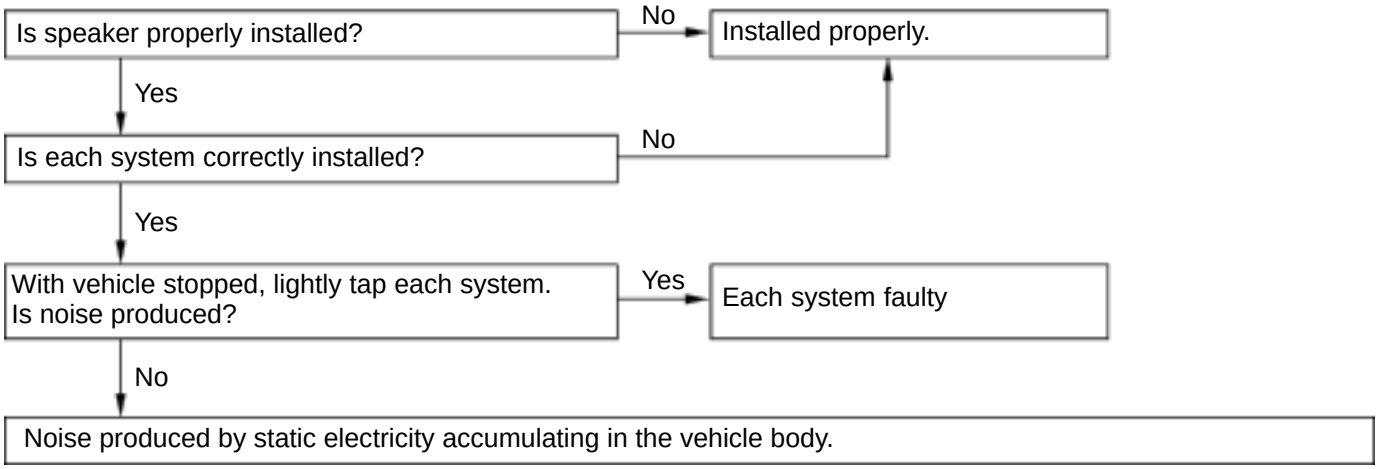

I01431

26	Noise	NOISE PRODUCED WHEN ENGINE STARTS

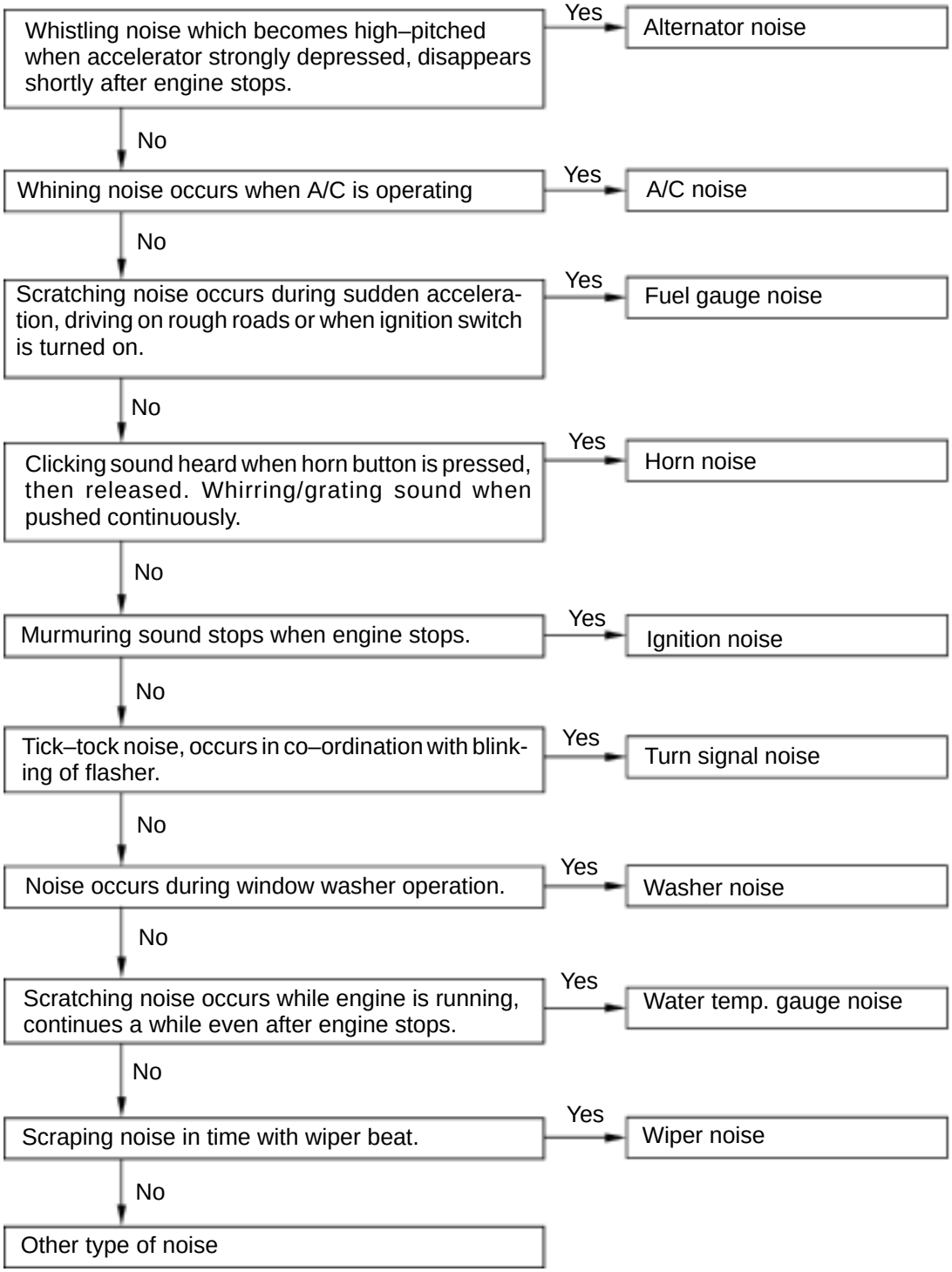

I01432

BE045–01

INSPECTION

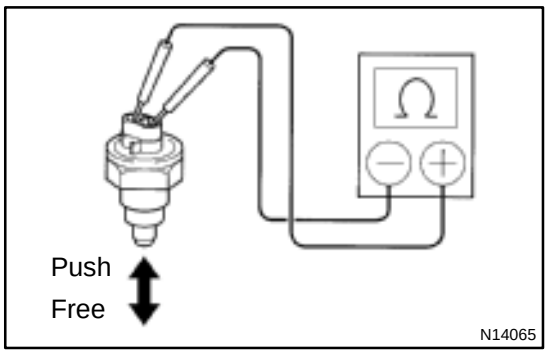

1. INSPECT BACK–UP LIGHT SWITCH CONTINUITY

Condition	Tester connection	Specified condition
Free	–	No continuity
Push	1 – 2	Continuity

If continuity is not as specified, replace the switch.

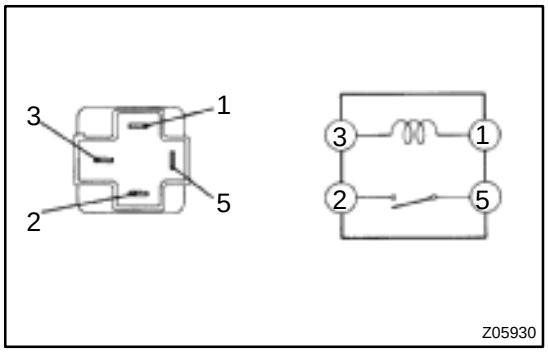

2. INSPECT BACK–UP LIGHT RELAY CONTINUITY

Condition	Tester connection	Specified condition
Constant	1 – 2	Continuity
Apply B+ between terminals 1 and 2.	3 – 5	Continuity

If continuity is not as specified, replace the relay.

3. INSPECT PARK/NEUTRAL POSITION SWITCH CONTINUITY

(A43D: See page AT–2)

(A340E, A340F: See page DI–389)

BACK–UP LIGHT SYSTEM

LOCATION

BE044–02

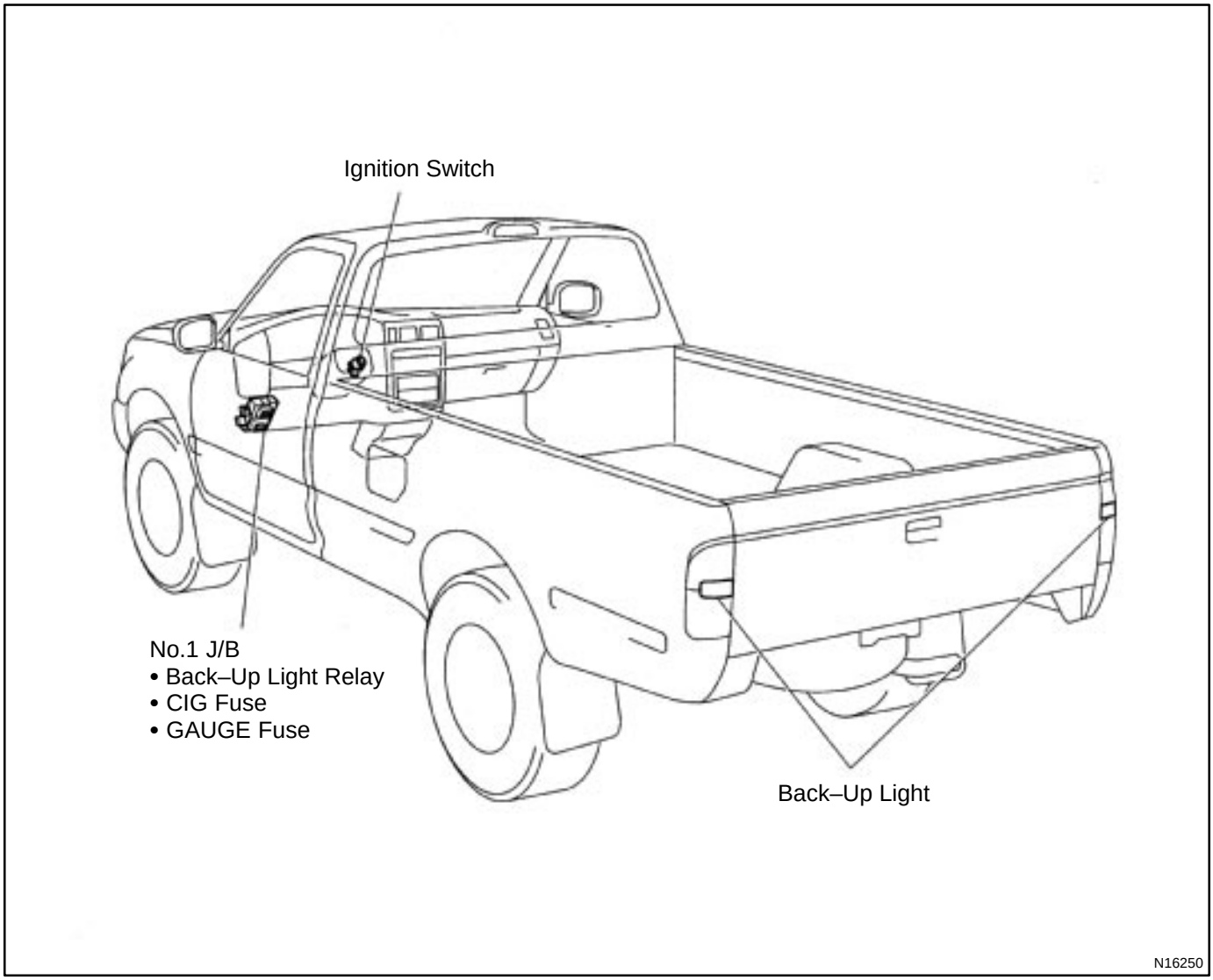

RZN Series

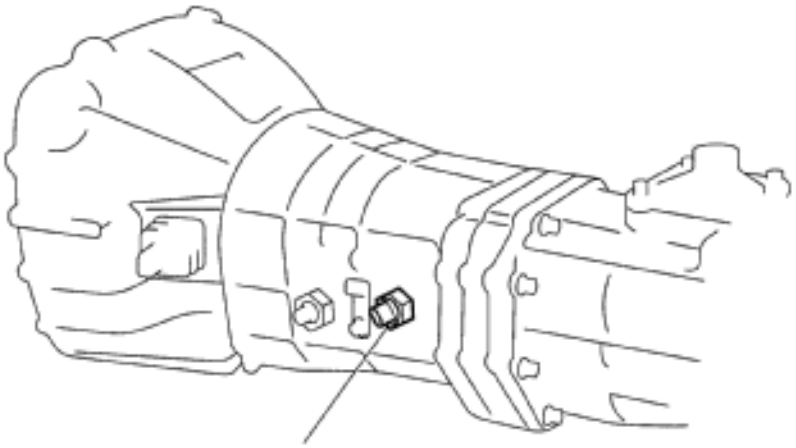

Back–Up Light Switch (M/T Vehicle)

VZN Series

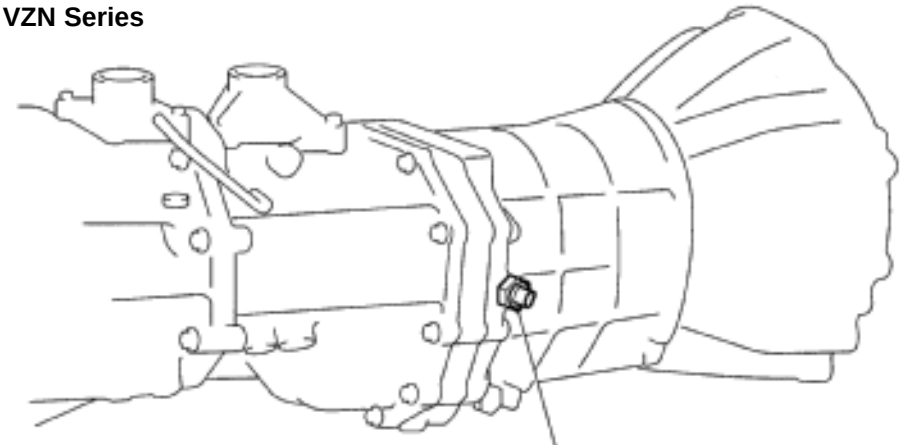

Back–Up Light Switch (M/T Vehicle)

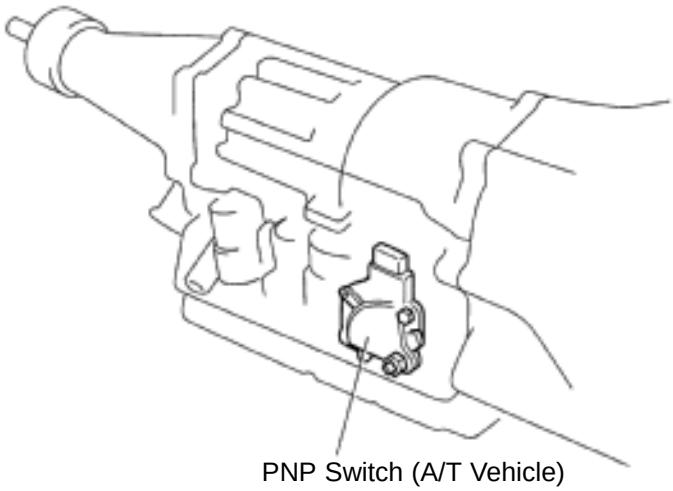

PNP Switch (A/T Vehicle)

Z15350

CLOCK

BE04N–01

TROUBLESHOOTING

HINT:

Troubleshoot the clock according to the table below.

Clock will not operate	1
Clock loses or gains time	2

± 1.5 seconds / day

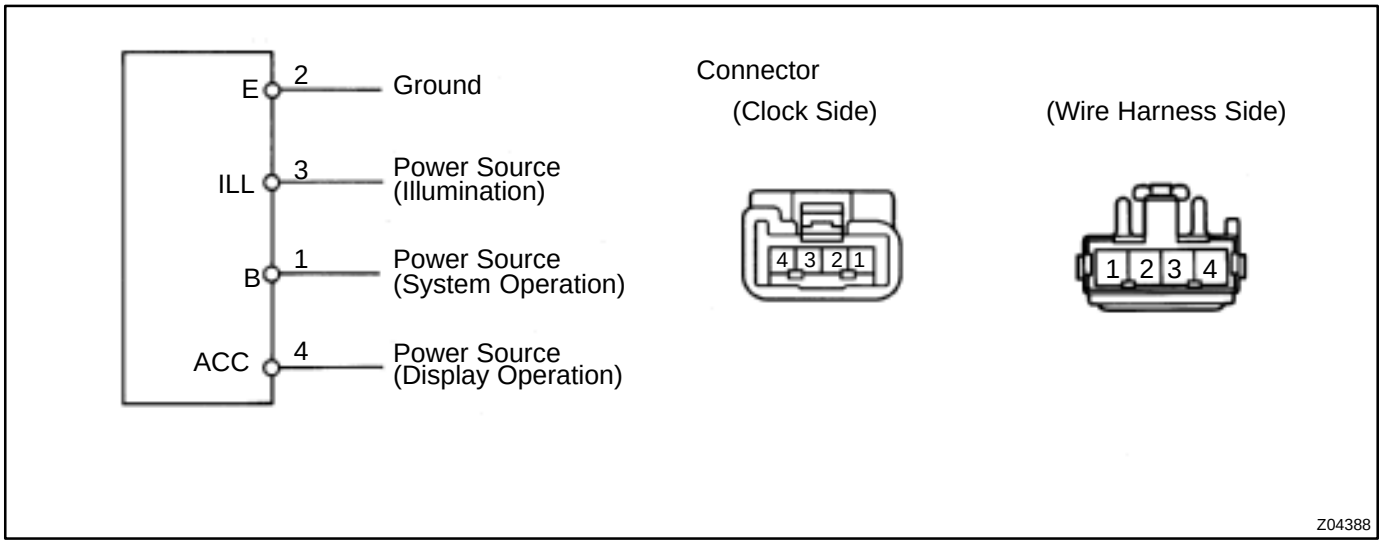

1	CLOCK WILL NOT OPERATE

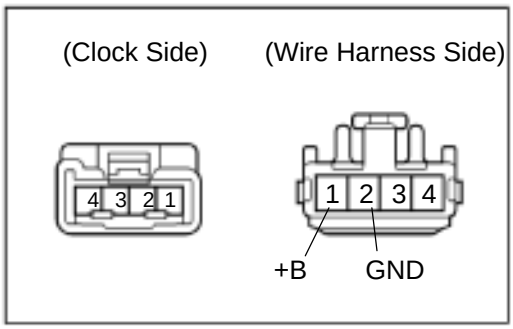

(a) Check that the battery positive voltage is 10 –14 V.
If voltage is not as specified, replace the battery.

(b) Check that the DOME fuse is not blown.
If the fuse is blown, replace the fuse and check for short circuit.

(c) Troubleshoot the clock as follows.
HINT:
Inspect the connector on the wire harness side.

Is there battery voltage between terminal +B and body ground?
- No → Open or short circuit in wire harness between terminal +B and DOME fuse.
- Yes ↓

Does continuity exist between terminal GND and body ground?
- No → Open circuit in wire harness between terminal GND and body ground.
- Yes ↓

Replace clock.

I01417

2	CLOCK LOSES OR GAINS TIME

(Clock Side)

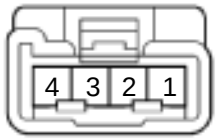

(Wire Harness Side)

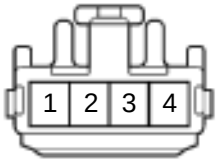

(a) Check that the battery positive voltage is 10–16 V.
If voltage is not as specified, replace the battery.

(b) Inspect the error of the clock.
Allowable error (per day): ± 1.5 sec.
If the error exceeds the allowable error, replace the clock.

(c) Check that the clock adjusting button is caught in position, and does not return.
If the button is not returned, repair or replace the clock.

(d) Troubleshoot the clock as follows.
HINT:
Inspect the connector on the wire harness side.

Is there 10 – 16 V between terminal +B and body ground?

Below 10V → Detect cause and repair, or recharge battery.

Yes → Adjust or replace clock.

I01418

BE04B–02

CIRCUIT

w/o Tachometer

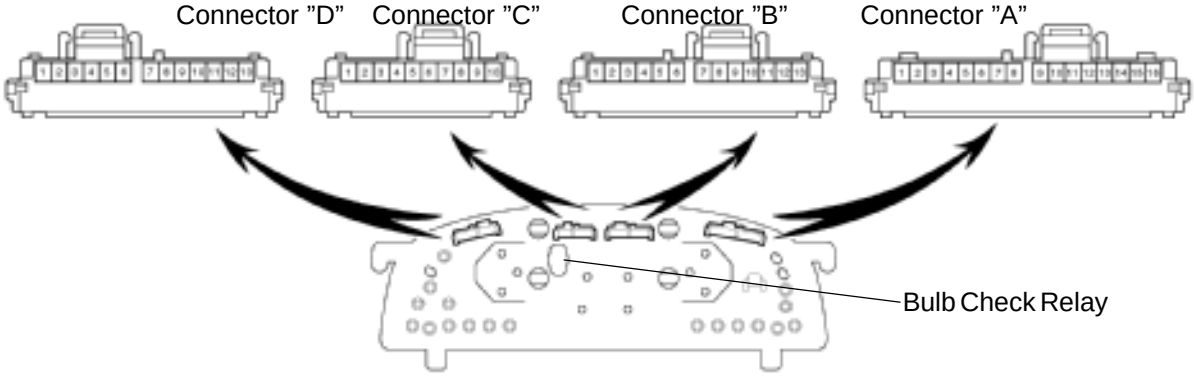

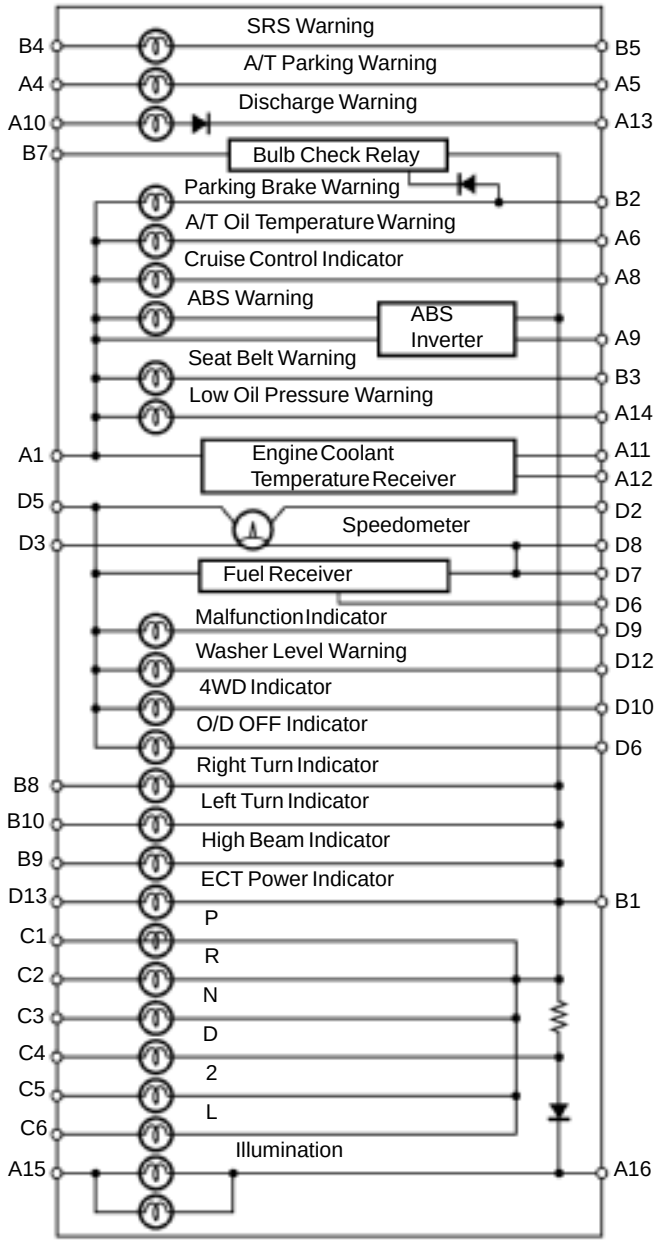

No.		Wiring connector side
A	1	GAUGE Fuse
	4	Park/Neutral Position Switch
	5	Transfer Neutral Position Switch
	6	A/T Oil Temperature Switch
	8	Cruise Control ECU
	9	ABS ECU
	10	IGN Fuse
	11	Engine Coolant Temperature Sender Gauge
	12	Ground
	13	Generator L Terminal
	14	Low Oil Pressure Warning Switch
	15	TAIL Fuse
	16	Light Control Rheostat
B	1	Ground
	2	Parking Brake Switch
	3	Seat Belt Switch
	4	ECU–B Fuse
	5	Airbag Sensor Assembly
	6	O/D OFF Switch
	7	STARTER Relay
	8	Right Turn Signal Switch
	9	Headlight Dimmer switch
	10	Left turn Signal Switch
C	1	Park/Neutral Position Switch *
	2	Park/Neutral Position Switch *
	3	Park/Neutral Position Switch *
	4	Park/Neutral Position Switch *
	5	Park/Neutral Position Switch *
	6	Park/Neutral Position Switch *
D	2	Vehicle Speed Sensor
	3	ECM
	5	GAUGE Fuse
	6	Fuel Sensor Gauge
	7	Ground
	8	Ground
	9	ECM
	10	Transfer Indicator Switch
	11	Washer Level Waring Switch
	12	Pattern Select Switch

* : Column A/T

I01916

w/ Tachometer

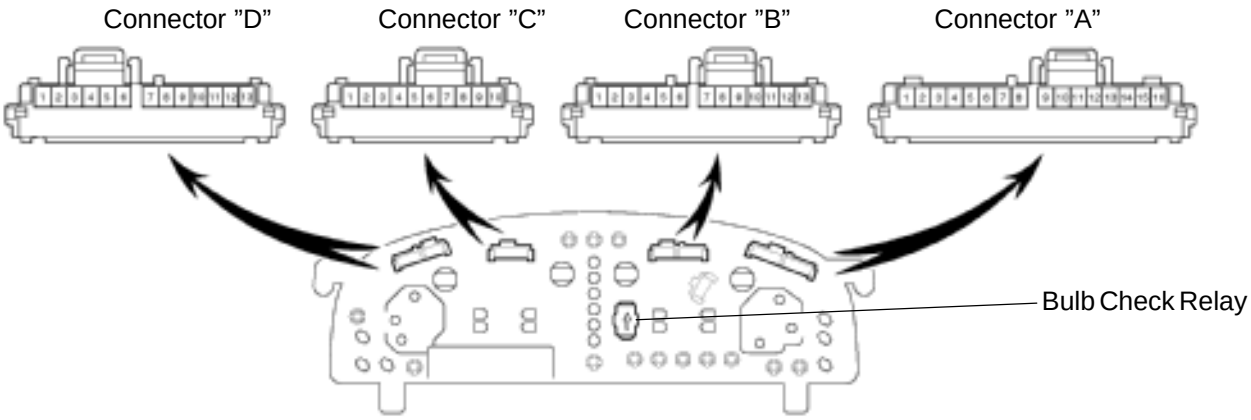

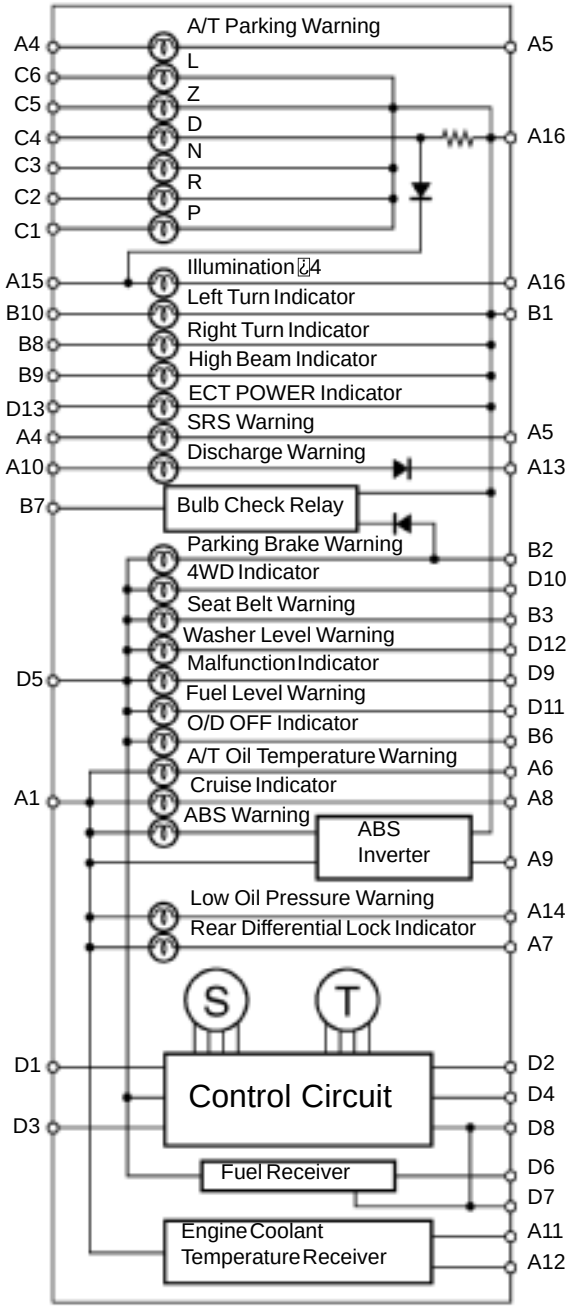

No.		Wire Harness Side
A	1	GAUGE Fuse
	4	Park/Neutral Position Switch
	5	Transfer Neutral Position Switch
	6	A/T Oil Temperature Switch
	8	Cruise Control ECU
	7	Rear Differential Lock Switch
	9	ABS ECU
	10	IGN Fuse
	11	Engine Coolant Temperature Sender Gouge
	12	Ground
	13	Generator L Terminal
	14	Low Oil Pressure Warning Switch
	15	TAIL Fuse
	16	Light Control Rheostat
B	1	Ground
	2	Parking Brake Switch
	3	Seat Belt Buckle Switch
	4	ECU – B Fuse
	5	Airbag Sensor Assembly
	6	O/D OFF Switch
	7	STARTER Relay
	8	Right Turn Signal Switch
	9	Headlight Dimmer Switch
	10	Left Turn Signal Switch
C	1	Park/Neutral Position Switch *
	2	Park/Neutral Position Switch *
	3	Park/Neutral Position Switch *
	4	Park/Neutral Position Switch *
	5	Park/Neutral Position Switch *
	6	Park/Neutral Position Switch *
D	1	DOME Fuse
	2	Vehicle Speed Sensor
	3	ECM
	5	GAUGE Fuse
	6	Fuel Sensor Gauge
	7	Ground
	8	Ground
	9	ECM
	10	Transfer Indicator Switch
	11	Fuel Level Warning Switch
	12	Washer Level Warning Switch
	13	Pattern Select Switch

* : Column A/T

P

I01917

BE04C–01

INSPECTION

1. INSPECT SPEEDOMETER ON–VEHICLE

Using a speedometer tester, inspect the speedometer for allowable indication error and check the operation of the odometer.
HINT:
Tire wear and tire over or under inflation will increase the indication error.
If error is excessive, replace the speedometer.

USA (mph)		CANADA (km/h)	
Standard indication	Allowable range	Standard indication	Allowable range
20	18 – 24	20	17 – 24
40	38 – 44	40	38 – 46
60	56 – 66	60	57.5 – 67
80	78 – 88	80	77 – 88
100	98 – 110	100	96 – 109
120	118 – 132	120	115 – 130
		140	134 – 151.5
		160	153 – 173

2. INSPECT VEHICLE SPEED SENSOR OPERATION

(a) Connect the positive (+) lead from the battery to terminal 1 and negative (–) lead to terminal 2.
(b) Connect the positive (+) lead from the tester to terminal 3 and the negative (–) lead to terminal 2.
(c) Rotate the shaft.
(d) Check that there is voltage change from approx. 0 V to 11 V or more between terminals 2 and 3.

HINT:
The voltage change should be performed 4 times for every revolution of the speed sensor shaft.
If operation is not as specified, replace the sensor.

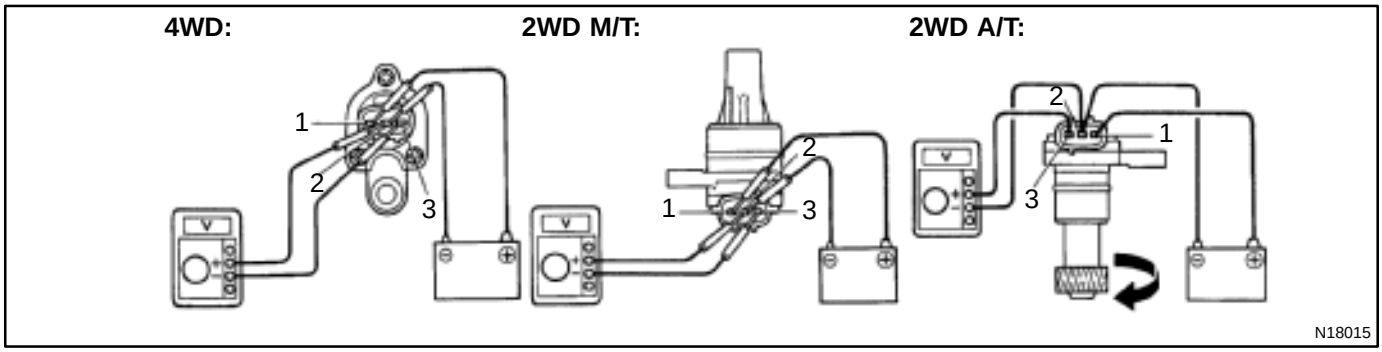

3. INSPECT TACHOMETER (ON–VEHICLE)

(a) Connect a tune–up test tachometer, and start the engine.

NOTICE:

- **Reversing the connection of the tachometer will damage the transistors and diodes inside.**
- **When removing or installing the tachometer, be careful not to drop or subject it to heavy shocks.**

(b) Compare the tester and tachometer indications.

DC 13.5 V 20˚C at (68˚F)

Standard indication (rpm)	Allowable range (rpm)
700	630 – 770
3,000	2,850 – 3,150
5,000	4,850 – 5,150
7,000	6,790 – 7,210

If error is excessive, replace the tachometer.

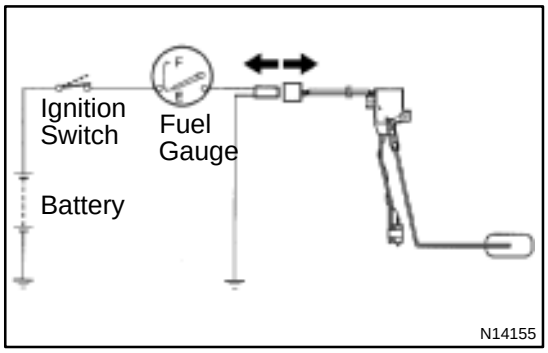

4. INSPECT FUEL RECEIVER GAUGE OPERATION

(a) Disconnect the connector from the sender gauge.

(b) Turn the ignition switch ON, check that the receiver gauge needle indicates EMPTY.

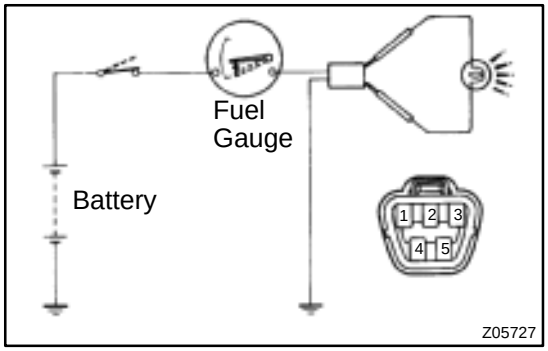

(c) Connect terminals 2 and 3 on the wire harness side connector through a 3.4 W test bulb.

(d) Turn the ignition switch ON, check that the bulb lights up and the receiver gauge needle moves toward FULL side.

HINT:

Because of the silicon oil in the gauge, it will take a short time for needle to stabilize.

If operation is not as specified, inspect the receiver gauge resistance.

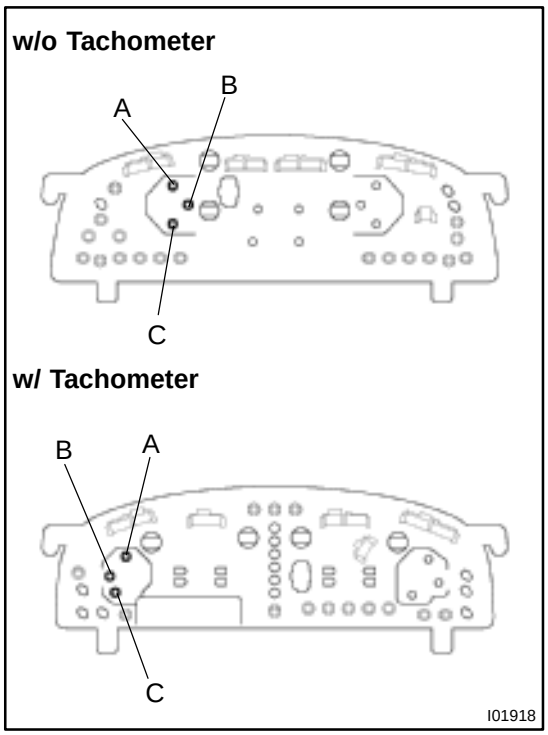

5. INSPECT FUEL RECEIVER GAUGE RESISTANCE

Measure the resistance between terminals.

w/ Tachometer

Between terminals	Resistance (Ω)
A – B	Approx. 137
A – C	Approx. 260.3
B – C	Approx. 123.3

w/o Tachometer

Between terminals	Resistance (Ω)
A – B	Approx. 160
A – C	Approx. 84
B – C	Approx. 244

If resistance value is not as specified, replace the receiver gauge.

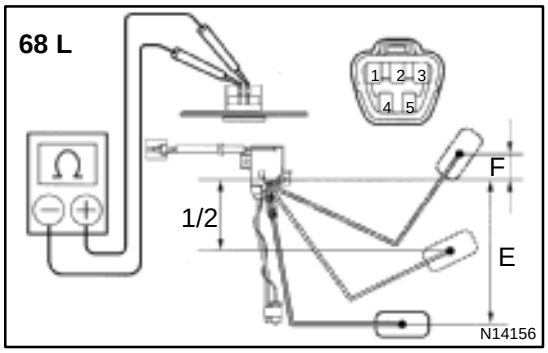

6. INSPECT FUEL SENDER GAUGE RESISTANCE

Measure the resistance between terminals 2 and 3.

68 L:

Float position mm (in.)	Resistance (Ω)
F: Approx. 28.0 (1.102)	F: Approx. 3.0
1/2: 81.3 (3.201)	1/2: Approx. 32.5
E: Approx. 163.9 (6.453)	E: Approx. 110.0

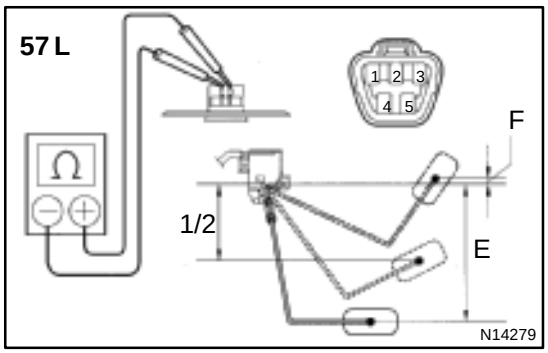

57 L:

Float position mm (in.)	Resistance (Ω)
F: Approx. 12.1 (0.476)	F: Approx. 3.0
1/2: 79.0 (3.110)	1/2: Approx. 32.5
E: Approx. 153.3 (6.035)	E: Approx. 110.0

If resistance value is not as specified, replace the sender gauge.

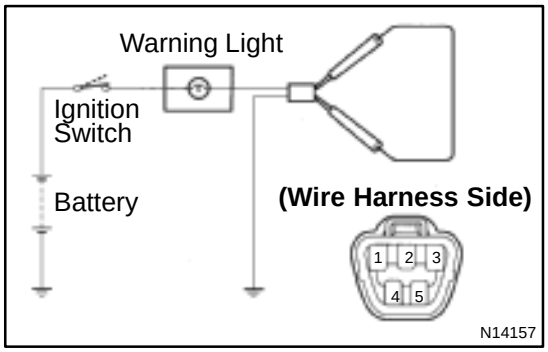

7. INSPECT FUEL LEVEL WARNING LIGHT

(a) Disconnect the connector from the sender gauge.
(b) Connect terminals 1 and 3 on the wire harness side connector.
(c) Turn the ignition switch ON and check that the warning light lights up.

If the warning light does not light up, test the bulb.

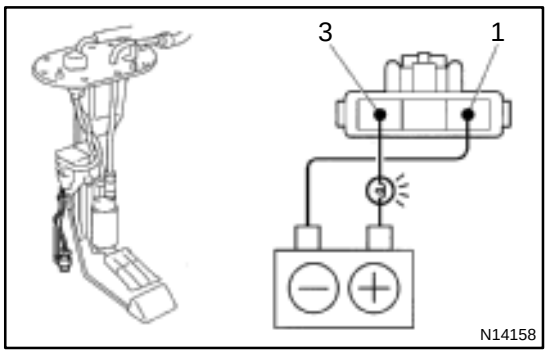

8. INSPECT FUEL LEVEL WARNING SWITCH

(a) Apply battery positive voltage between terminals 1 and 3, and through a 3.4 W test bulb, and check that the bulb lights up.

HINT:

It will take a short time for bulb to light up.

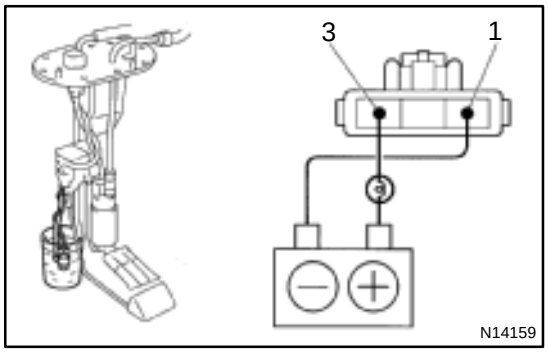

(b) Submerge the switch in fuel and check that the bulb goes out.

If operation is not as specified, replace the sender gauge.

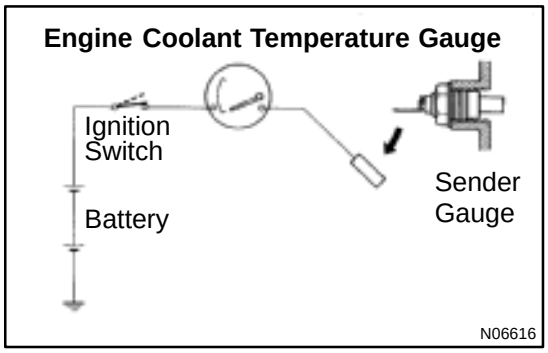

9. INSPECT ENGINE COOLANT TEMPERATURE RECEIVER GAUGE OPERATION

(a) Disconnect the connector from the sender gauge.

(b) Turn the ignition switch ON and check that the receiver gauge needle indicates COOL.

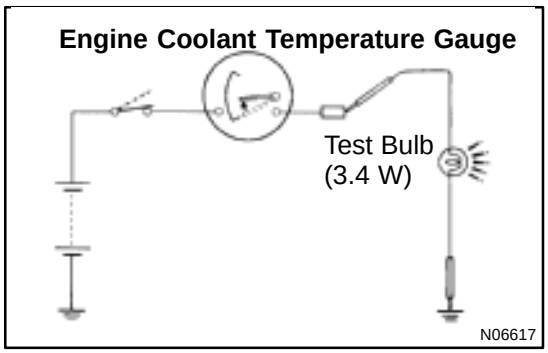

(c) Ground terminal on the wire harness side connecter through a 3.4 W test bulb.

(d) Turn the ignition switch ON, and check that the bulb lights up and the receiver gauge needle moves to the hot side.

If operation is as specified, replace the sender gauge. Then, recheck the system.

If operation is not as specified, measure the receiver gauge resistance.

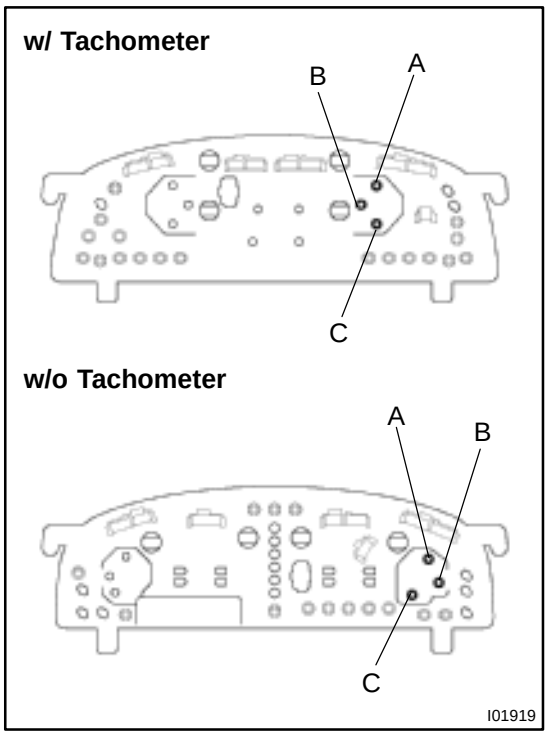

10. INSPECT ENGINE COOLANT TEMPERATURE RECEIVER GAUGE RESISTANCE

Measure the resistance between terminals.

w/ Tachometer

Between terminals	Resistance (Ω)
A – B	Approx. 256.5
A – C	Approx. 181.5
B – C	Approx. 75

w/o Tachometer

Between terminals	Resistance (Ω)
A – B	Approx. 139
A – C	Approx. 75
B – C	Approx. 214

HINT:

Connect the test leads so that the current from the ohmmeter can flow according to the above order. This circuit includes the diode.

If resistance value is not as specified, replace the receiver gauge.

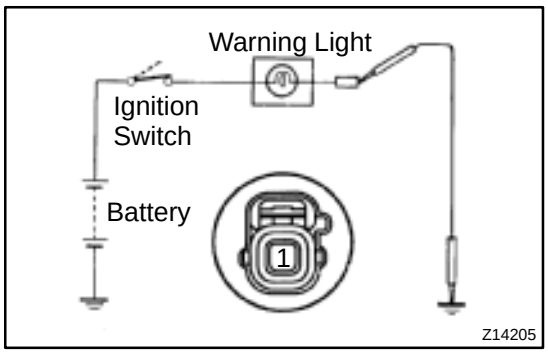

11. INSPECT LOW OIL ORESSURE WARNING LIGHT

(a) Disconnect the connector from the warning switch and ground terminal on the wire harness side connector.

(b) Turn the ignition switch ON and check that the warning light lights up.

If the warning light does not light up, test the bulb.

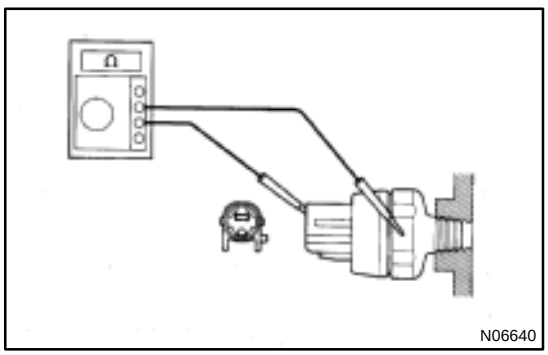

12. INSPECT LOW OIL PRESSURE SWITCH

(a) Disconnect the connector from the switch.

(b) Check that continuity exists between terminal and ground with the engine stopped.

(c) Check that no continuity exists between terminal and ground with the engine running.

HINT:

Oil pressure should be over 49 kPa (0.5 kgf/cm^2, 7.1 psi).

If operation is not as specified, replace the switch.

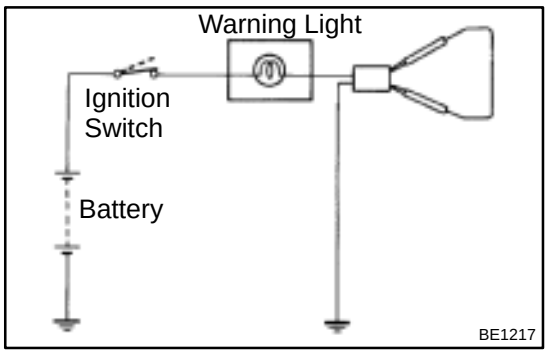

13. INSPECT BRAKE WARNING LIGHT

(a) Disconnect the connectors from the level warning switch and parking brake switch.
(b) Connect terminals on the wire harness side connector of the level warning switch connector.
(c) Turn the ignition switch ON and check that the warning light lights up.

If the warning light does not light up, test the bulb.

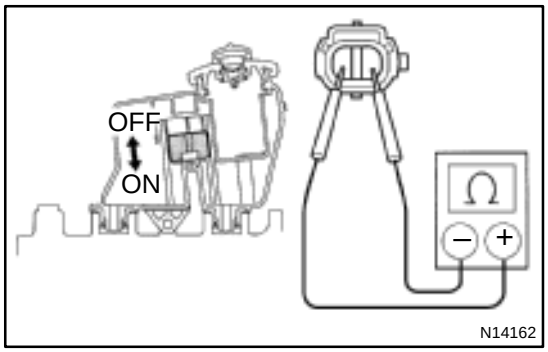

14. INSPECT BRAKE FLUID LEVEL WARNING SWITCH CONTINUITY

(a) Check that no continuity exists between terminals with the switch OFF (float up).
(b) Check that continuity exists between terminals with the switch ON (float down).

If operation is not as specified, replace the switch.

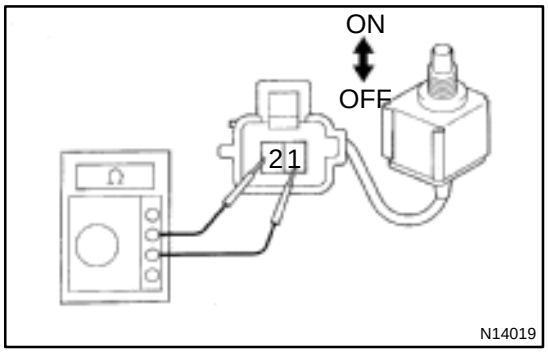

15. INSPECT PARKING BRAKE SWITCH CONTINUITY

(a) Check that continuity exists between terminals with the switch ON (switch pin released).
(b) Check that no continuity exists between terminals with the switch OFF (switch pin pushed in).

If operation is not as specified, replace the switch.

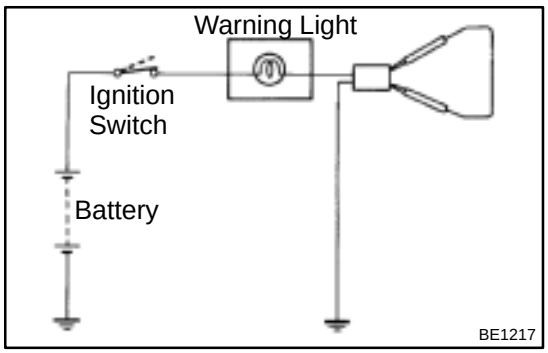

16. INSPECT WASHER LEVEL WARNING LIGHT

(a) Disconnect the connectors from the level warning switch and parking brake switch.
(b) Connect terminals on the wire harness side connector of the level warning switch connector.
(c) Remove the CHARGE fuse and turn the ignition switch ON, and check that the warning light comes on.

If the warning light does not light up, test the bulb.

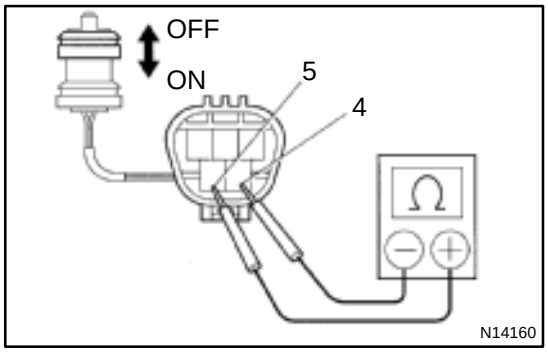

17. INSPECT WASHER LEVEL SWITCH

(a) Check that no continuity exists between terminals with the switch OFF (float up).
(b) Check that continuity exists between terminals with the switch ON (float down).

If operation is not as specified, replace the switch.

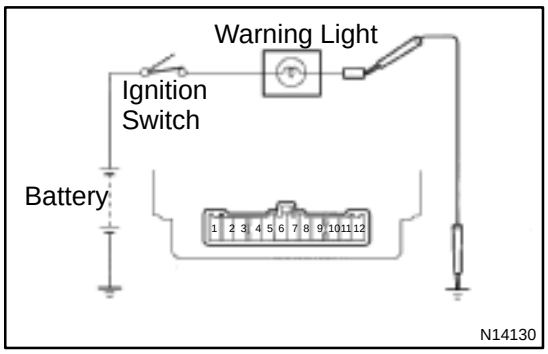

18. INSPECT SEAT BELT WARNING LIGHT

(a) Remove the integration relay from the No.1 J/B.
(b) Ground terminal 9 on the junction block side connector.
(c) Turn the ignition switch ON and check that the warning light lights up.

If the warning light does not light up, inspect the bulb or wire harness.

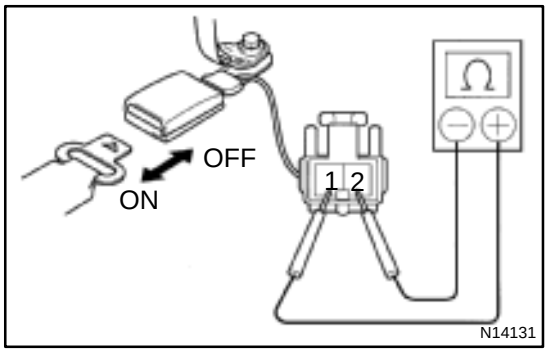

19. INSPECT BUCKLE SWITCH CONTINUITY

(a) Check that continuity exists between terminals on the switch side connector with the switch ON (belt unfastened).
(b) Check that no continuity exists between terminals on the switch side connector with the switch OFF (belt fastened).

If operation is not as specified, replace the seat belt inner.

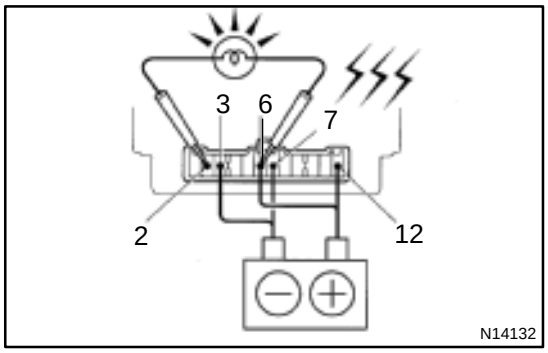

20. INSPECT INTEGRATION RELAY SEAT BELT WARNING SYSTEM OPERATION

(a) Connect the positive (+) lead from the battery to terminal 12 and negative (–) lead from the battery to terminal 7.
(b) Connect the terminal 2 to terminal 5 through the 3.4 W test bulb.
(c) Connect the negative (–) lead from the battery to terminal 3.
(d) Check that the bulb lights and the chime sounds for 4 – 8 seconds.
(e) Return to step (a) and operate the chime again.
(f) Check that the buzzer does not sound when disconnecting terminal 3 from the negative (–) lead.
(g) Check that the chime stops sounding.

HINT:
Check the chime within a period of 4 to 8 seconds.

If operation is not as specified, replace the relay.

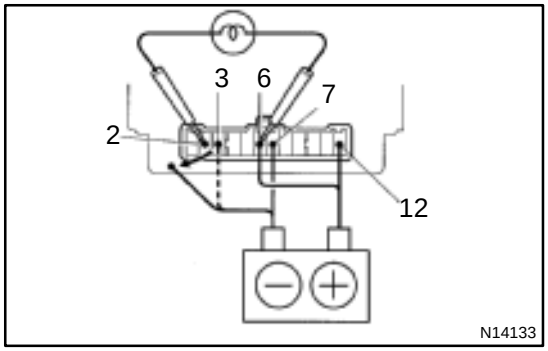

21. INSPECT INTEGRATION RELAY CIRCUIT (See page BE–12)

If operation is not as specified, replace the rheostat.

22. w/ Tachometer (DLX Grade M/T Vehicle) INSPECT LIGHT CONTROL RHEOSTAT

(a) Turn the rheostat knob OFF and check that no continuity exists between terminals (Rheostat knob turned to fully counterclockwise).
(b) Gradually, turn the rheostat knob from the dark side to bright side and check that the resistance decreases from 10 to 0 Ω.(Rheostat knob turned to clockwise)

If operation is not as specified, replace the rheostat.

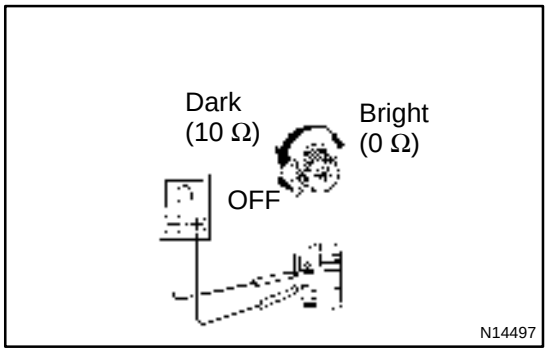

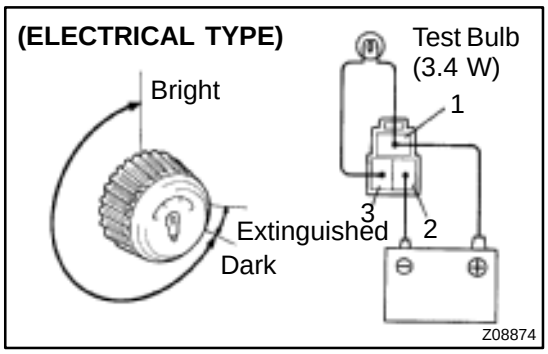

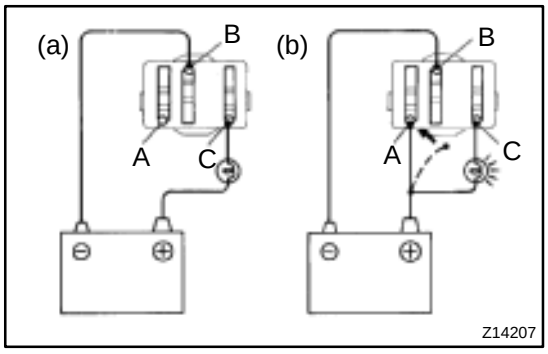

23. ELECTRICAL TYPE (w/ All A/T Vehicle and SR5 Grade M/T Vehicle):

INSPECT LIGHT CONTROL RHEOSTAT

(a) Connect terminals 1 and 3 through a 3.4 W test bulb.

(b) Connect the positive (+) lead from the battery to terminal 1 and the negative (–) lead to terminal 2.

(c) Turn the rheostat knob to fully counterclockwise and check that the test bulb goes out.

(d) Gradually turn the rheostat knob to clockwise and check that the test bulb brightness changes from dark to bright.

If operation is not as specified, replace the rheostat.

24. INSPECT BULB CHECK RELAY OPERATION

(a) Connect the positive (+) lead from the battery to terminal C through a 1.4 W test bulb and the negative (–) lead to terminal B, check that the test bulb does not light up.

(b) Connect the positive (+) lead from the battery to terminal A and check that the test bulb lights up.

If operation is not as specified, replace the relay.

COMBINATION METER

LOCATION

BE04A–02

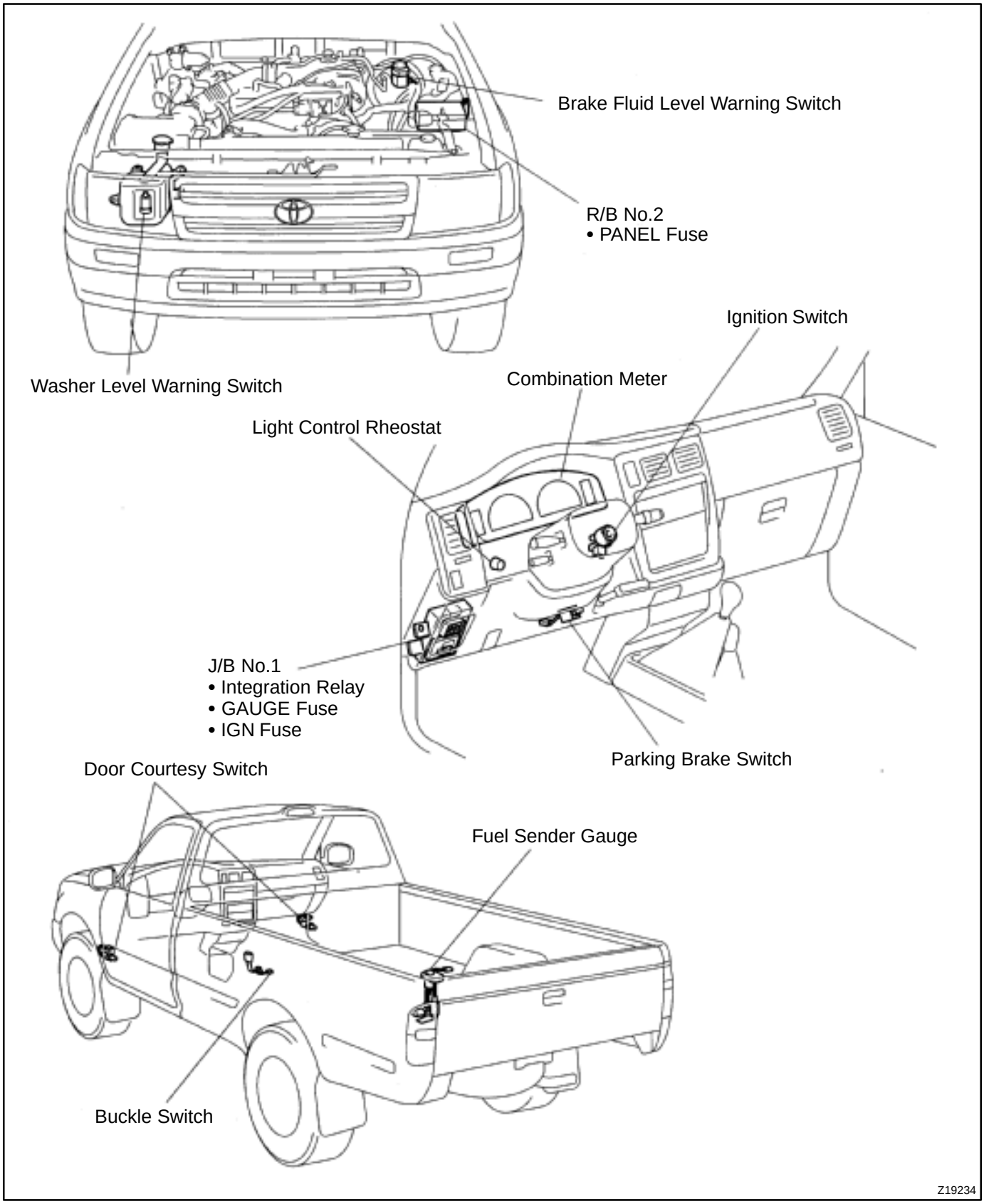

PZN Series

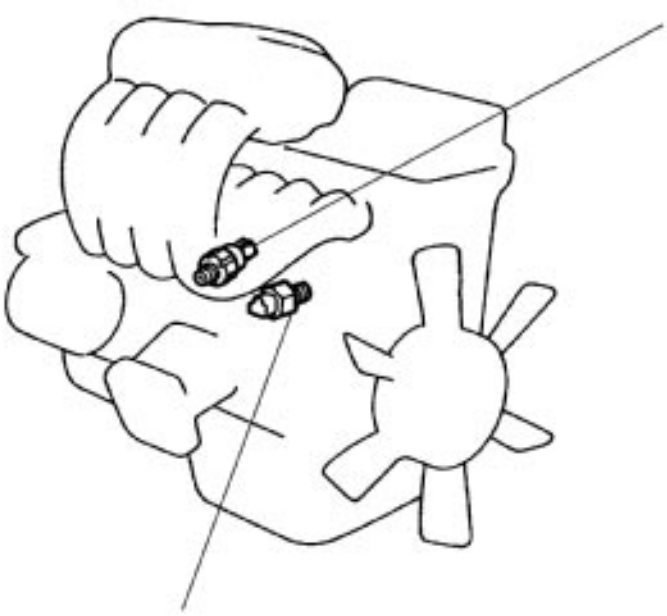

VZN Series

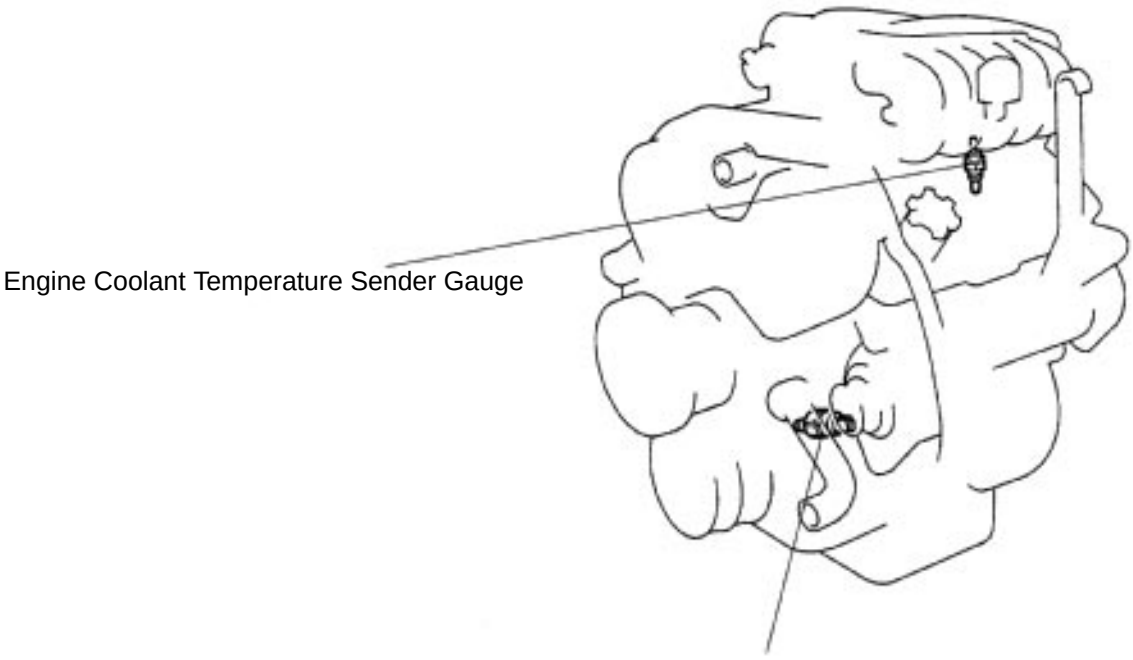

N14496

BE03Z–02

ADJUSTMENT

1. ADJUST HEADLIGHT AIMING

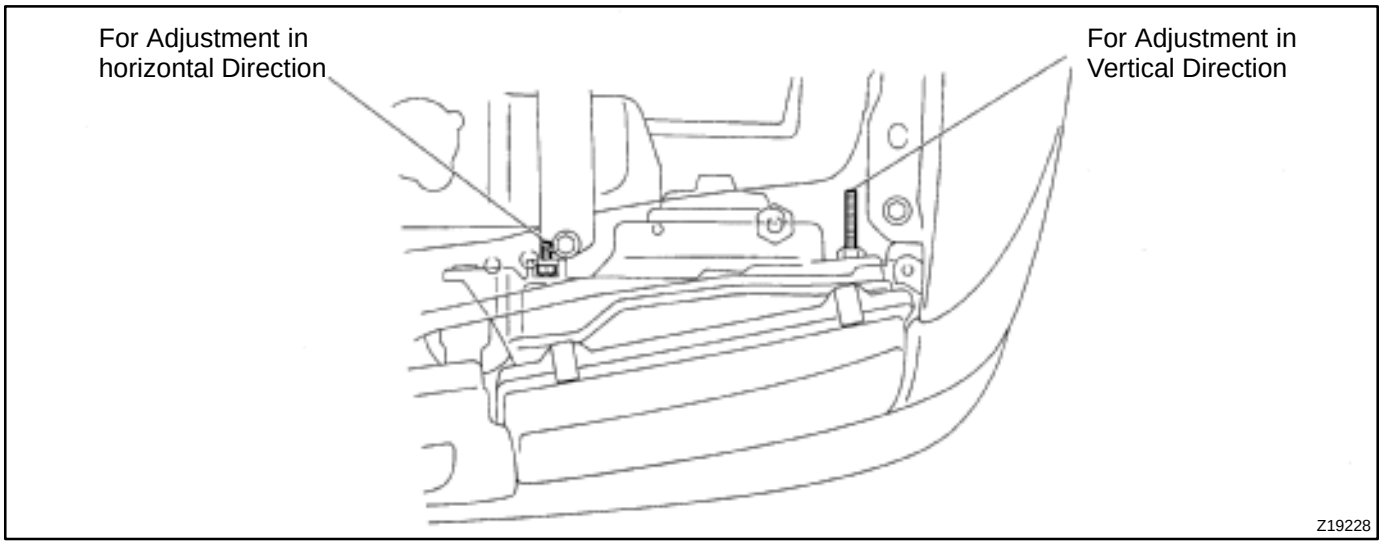

2. ADJUST SPIRAL CABEL

(See page SR–13)

BE03X–01

COMPONENTS

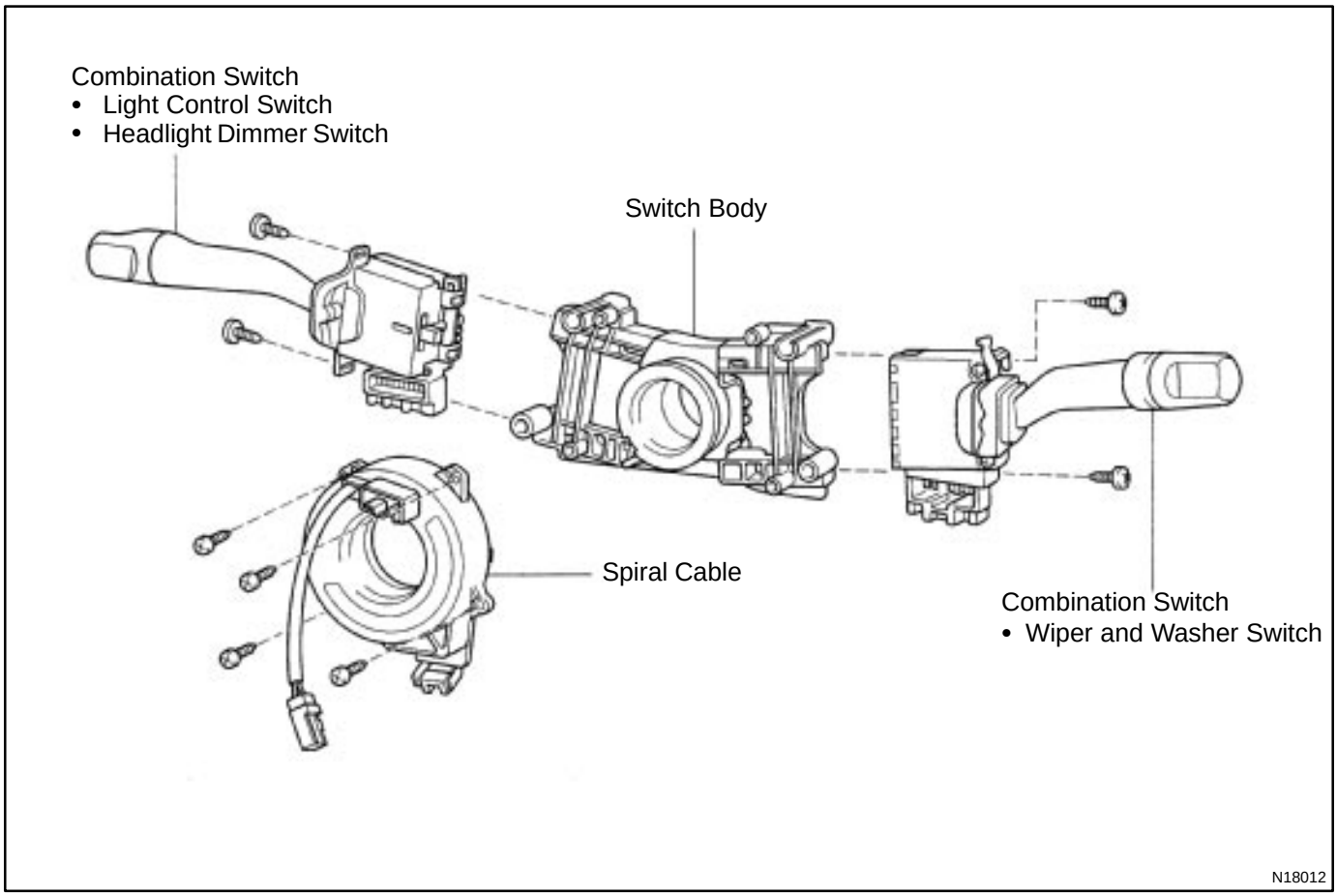

BE03Y–01

INSPECTION

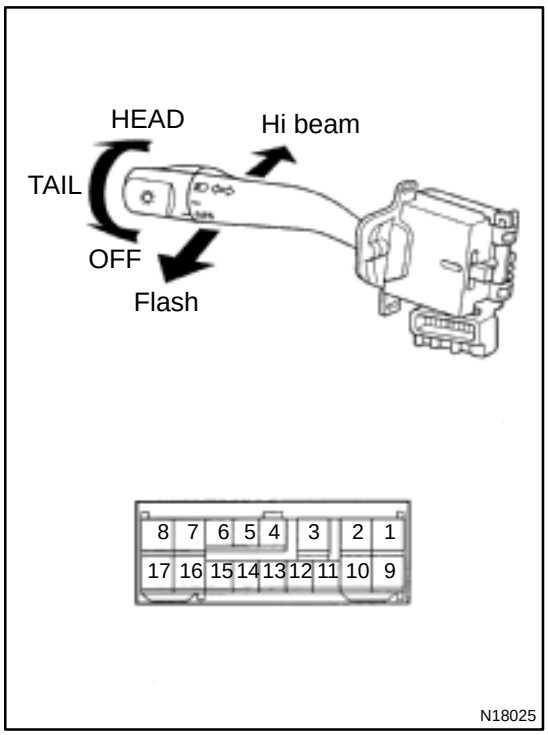

1. INSPECT LIGHT CONTROL SWITCH CONTINUITY

Switch position	Tester connection	Specified condition
OFF	–	No continuity
TAIL	14 – 16	Continuity
HEAD	13 – 14 – 16	Continuity

If continuity is not as specified, replace the switch.

2. INSPECT HEADLIGHT DIMMER SWITCH CONTINUITY

Switch position	Tester connection	Specified condition
Low beam	16 – 17	Continuity
High beam	7 – 16	Continuity
Flash	7 – 8 – 16	Continuity

If continuity is not as specified, replace the switch.

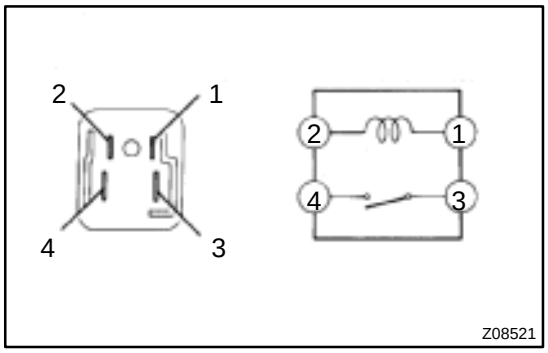

3. INSPECT HEADLIGHT CONTORL RELAY CONTINUITY

Condition	Tester connection	Specified condition
Constant	1 – 2	Continuity
Apply B+ between terminals 1 and 2.	3 – 4	Continuity

If continuity is not as specified, replace the relay.

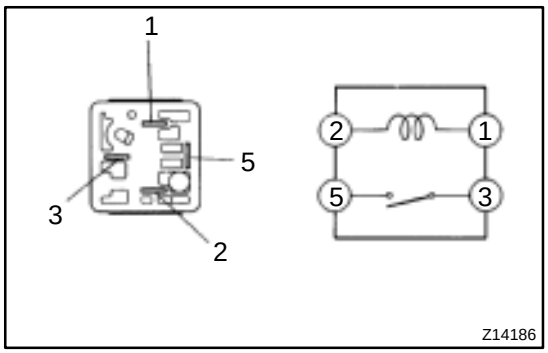

4. INSPECT TAILLIGHT CONTORL RELAY CONTINUITY

Condition	Tester connection	Specified condition
Constant	1 – 2	Continuity
Apply B+ between terminals 1 and 2.	3 – 5	Continuity

If continuity is not as specified, replace the relay.

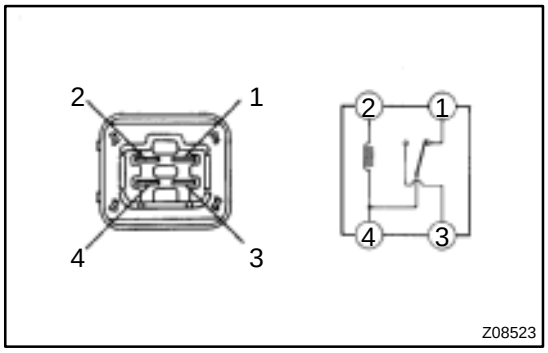

5. INSPECT HEADLIGHT DIMMER RELAY CONTINUITY

Condition	Tester connection	Specified condition
Constant	1 – 4, 2 – 4	Continuity
Apply B+ between terminals 2 and 4.	3 – 4	Continuity

If continuity is not as specified, replace the relay.

6. INSPECT DOOR COURTESY SWITCH

(See page BE–24)

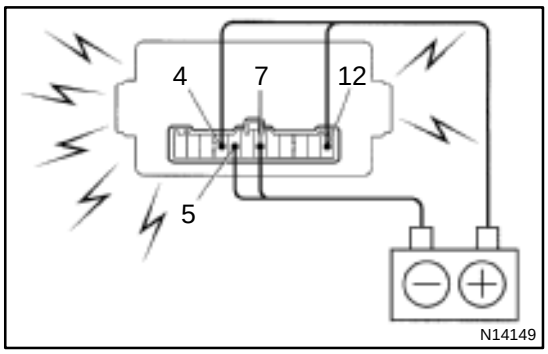

7. Light–On Warning System: INSPECT INTEGRATION RELAY OPERATION

(a) Connect the positive (+) lead from the battery to terminal 12 and the negative (–) lead to terminal 7.

(b) Connect the positive (+) lead from the battery to terminal 4 and the negative (–) lead to terminal 5.

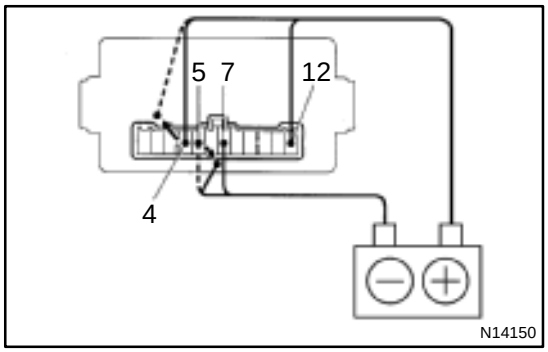

(c) Check that the buzzer does not sound when terminal 4 or 5 is connected to the positive (+) lead.

(d) Check that the buzzer does not sound when disconnecting terminal 4 or 5.

If operation is not as specified, replace the relay.

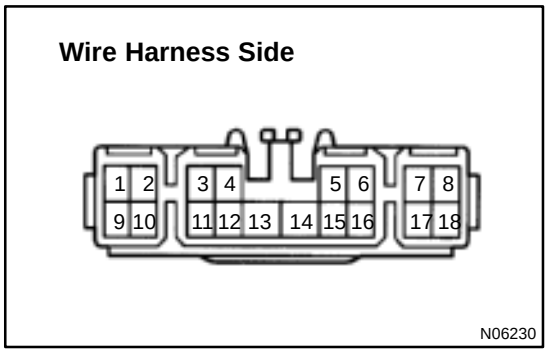

8. INSPECT DAYTIME RUNNING LIGHT RELAY CIRCUIT

Disconnect the connector from the relay and inspect the connector on the wire harness side.

Tester connection	Condition	Specified condition
5 – Ground	Light control switch position OFF or TAIL	No continuity
5 – Ground	Light control switch position HEAD	Continuity
7 – Ground	Headlight dimmer switch position Low beam and High	No continuity
7 – Ground	Headlight dimmer switch position Flash	Continuity
16 – Ground	Headlight dimmer switch position Low beam	No continuity
16 – Ground	Headlight dimmer switch position High beam or Flash	Continuity
8 – Ground	Parking brake switch position OFF (Parking brake lever released)	No continuity
8 – Ground	Paring brake switch position ON (Parking brake lever pulled up)	Continuity
12 – Ground	Constant	Continuity
13 – Ground	Constant	Continuity
17 – Ground	Constant	Continuity
18 – Ground	Brake fluid level warning position OFF	No continuity

18 – Ground	Brake fluid level warning position ON	Battery positive voltage
2 – Ground	Ignition switch position LOCK or ACC	No voltage
2 – Ground	Ignition switch position ON or START	Battery positive voltage
6 – Ground	Constant	Battery positive voltage
11 – Ground	Engine Stop	No voltage
11 – Ground	Engine Running	Battery positive voltage
15 – Ground	Constant	Battery positive voltage

If circuit is as specified, perform inspections.

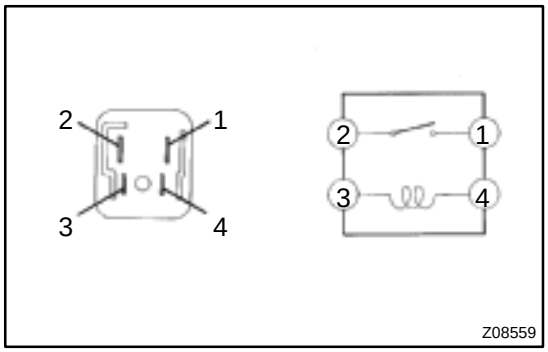

9. INSPECT DAYTIME RUNNING LIGHT NO.4 RELAY CONTINUITY

Condition	Tester connection	Specified condition
Constant	3 – 4	Continuity
Apply B+ between terminals 3 and 4.	1 – 2	Continuity

If continuity is not as specified, replace the relay.

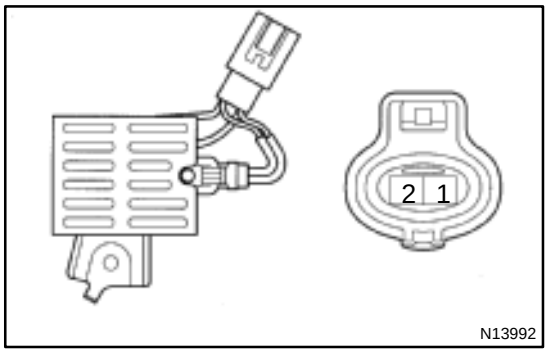

10. INSPECT DAYTIME RESISTOR RESISTANCE CONTINUITY

Condition	Tester connection	Specified condition
Constant	1 – 2	Approx. 337 mΩ

If continuity is not as specified, replace the resistor.

HEADLIGHT AND TAILLIGHT SYSTEM

BE03W–01

LOCATION

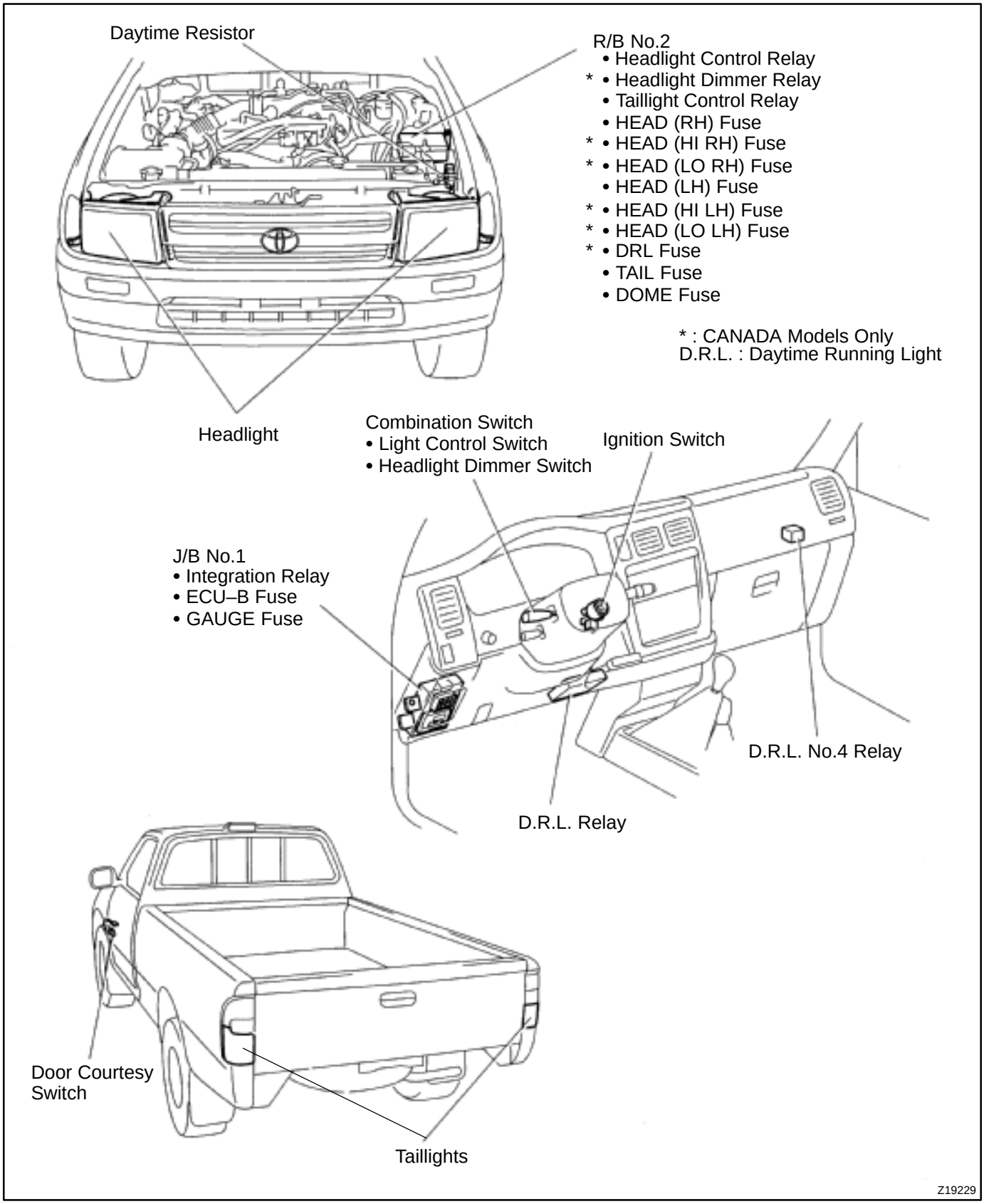

BE03V–01

INSPECTION

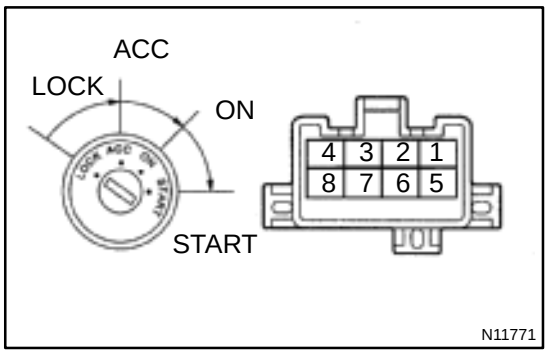

N11771

1. INSPECT IGNITION SWITCH CONTINUITY

Switch position	Tester connection	Specified condition
LOCK	–	No continuity
ACC	2 – 3	Continuity
ON	2 – 3 – 4 6 – 7	Continuity
START	1 – 2 – 4 6 – 7 – 8	Continuity

If continuity is not as specified, replace the switch.

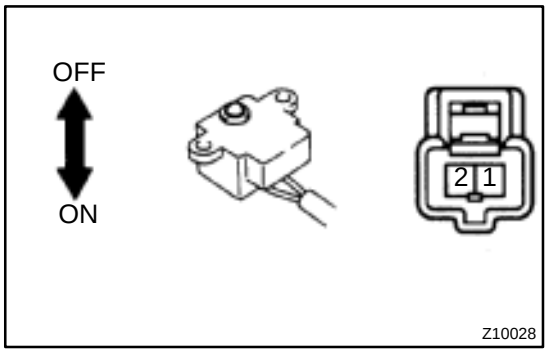

Z10028

2. INSPECT KEY UNLOCK WARNING SWITCH CONTINUITY

Condition	Tester connection	Specified condition
Switch OFF (Key removed)	–	No continuity
Switch ON (Key set)	1 – 2	Continuity

If continuity is not as specified, replace the switch.

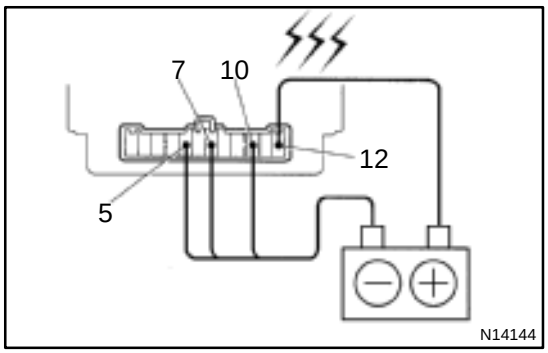

N14144

3. Key Unlock Warning System: INSPECT INTEGRATION RELAY OPERATION

(a) Connect the positive (+) lead from the battery to terminal 12.

(b) Connect the negative (–) lead from the battery to terminals 5, 7 and 10.

(c) Check the chime sounds.

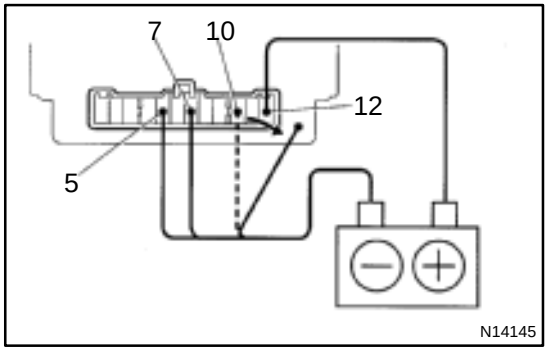

N14145

(d) Disconnect the negative (–) lead from the battery to terminal 10.

(e) Check that the chime stops sounding.

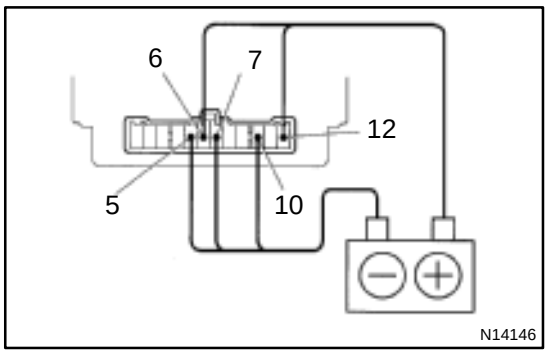

(f) Connect the negative (–) lead from the battery to terminal 10.
(g) Connect the positive (+) lead from the battery to terminal 6.
(h) Check that the chime stops sounding.

If operation is not as specified, replace the relay.

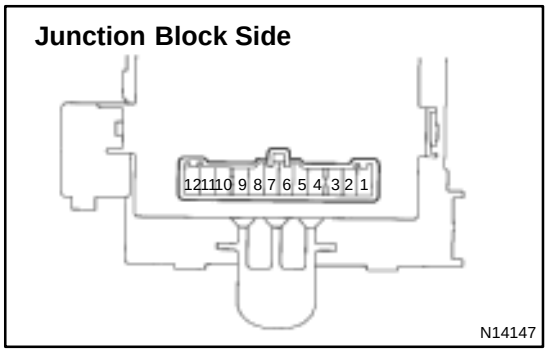

4. INSPECT INTEGRATION RELAY CIRCUIT

(a) Remove the relay from the junction block No.1 and inspect the connectors on the junction block side.

Tester connection	Condition	Specified condition
7 – Ground	Constant	Continuity
9 – Ground	Passenger's door courtesy switch OFF (Room light switch OFF)	Continuity
9 – Ground	Passenger's door courtesy switch ON (Room light switch OFF)	No continuity
4 – Ground	Light control switch OFF	No voltage
4 – Ground	Light control switch TAIL or HEAD	Battery positive voltage
6 – Ground	Ignition switch LOCK or ACC	No voltage
6 – Ground	Ignition switch ON	Battery positive voltage
8 – Ground	Ignition switch LOCK	No voltage
8 – Ground	Ignition switch ACC or ON	Battery positive voltage
11 – Ground	Constant	Battery positive voltage
12 – Ground	Constant	Battery positive voltage

If circuit is as specified, try replacing the relay with a new one.
If circuit is not as specified, inspect the circuits connected to other parts.

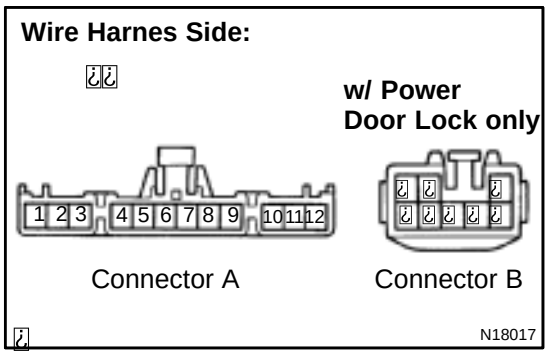

(b) Disconnect the connector from the integration relay and inspect the connectors on the wire harness side.

Tester connection	Condition	Specified condition
A3 – Ground	Driver's buckle switch OFF	No continuity
A3 – Ground	Driver's buckle switch ON	Continuity
A5 – Ground	Driver's door courtesy switch OFF	Continuity
A5 – Ground	Driver's door courtesy switch ON	No continuity
A10 – Ground	Key unlock warning switch OFF	No continuity
A10 – Ground	Key unlock warning switch ON	Continuity
B1 – Ground	Constant	Continuity
B4 – Ground	Driver's door key lock and unlock switch OFF	No continuity
B4 – Ground	Driver's door key lock and unlock switch UNLOCK	Continuity
B5 – Ground	Door lock control switch OFF and driver's and passenger's door key lock and unlock switch OFF	No continuity
B5 – Ground	Door lock control switch LOCK or driver's or passenger's door key lock and unlock switch LOCK	Continuity
B6 – Ground	Door lock control switch OFF and passenger's door key lock and unlock switch OFF	No continuity
B6 – Ground	Door lock control switch UNLOCK or passenger's door key lock and unlock switch UNLOCK	Continuity
B7 – Ground	Passenger's door unlock detection switch OFF	No continuity
B7 – Ground	Passenger's door unlock detection switch ON	Continuity
B8 – Ground	Driver's door unlock detection switch OFF	No continuity
B8 – Ground	Driver's door unlock detection switch ON	Continuity
A12 – Ground	Constant	Battery positive voltage

IGNITION SWITCH AND KEY UNLOCK WARNING SWITCH

BE03U–01

LOCATION

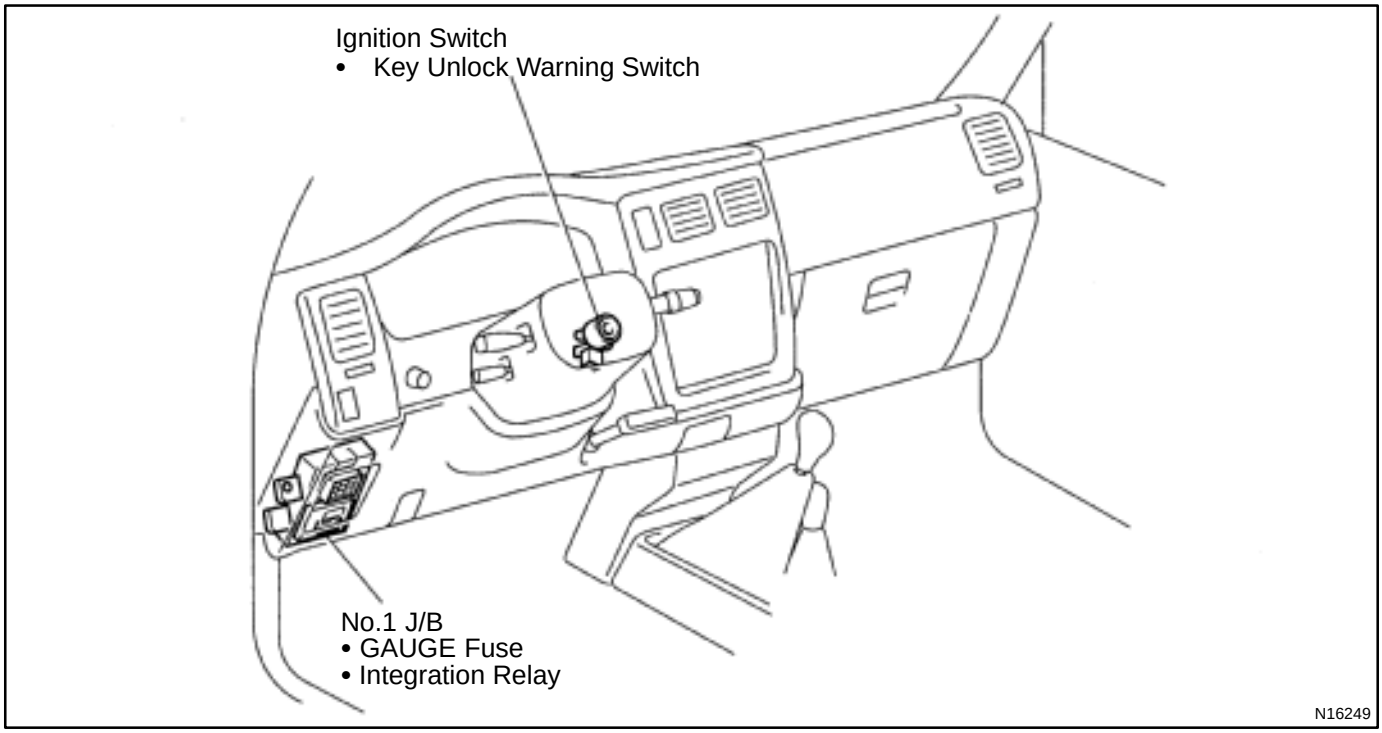

BE043–01

INSPECTION

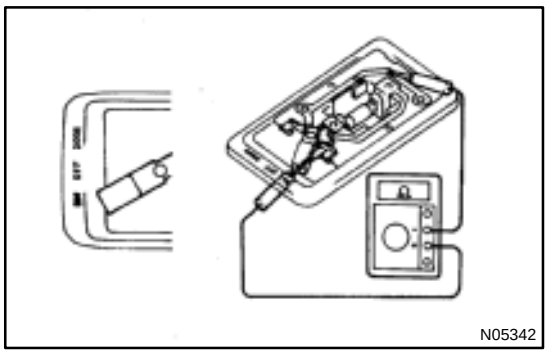
N05342

1. INSPECT ROOM LIGHT SWITCH CONTINUITY

(a) Disconnect the connector from room light switch.

(b) Turn the room light switch ON, check that continuity exists between terminal 2 and body ground.

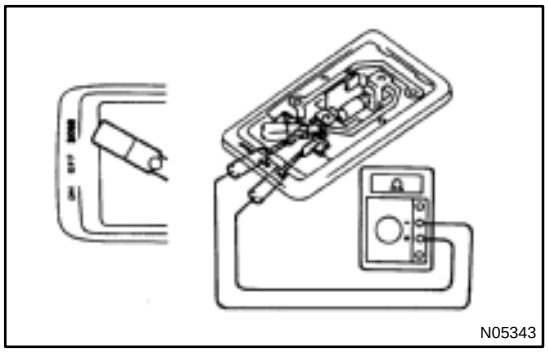
N05343

(c) Turn the room light switch to DOOR, check that there is continuity between terminals 1 and 2.

If operation is not as specified, replace the switch.

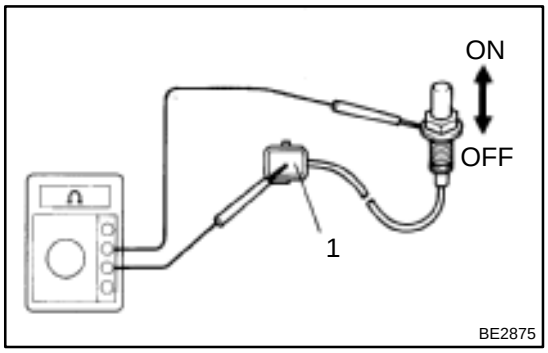

BE2875

2. INSPECT DOOR COURTESY SWITCH CONTINUITY

(a) Check that continuity exists between terminal and the switch body in the ON position (switch pin released : opened door).

(b) Check that no continuity exists between terminal and the switch body in the OFF position (switch pin pushed in : closed door).

If operation is not as specified, replace the switch.

INTERIOR LIGHT SYSTEM

LOCATION

BE042–01

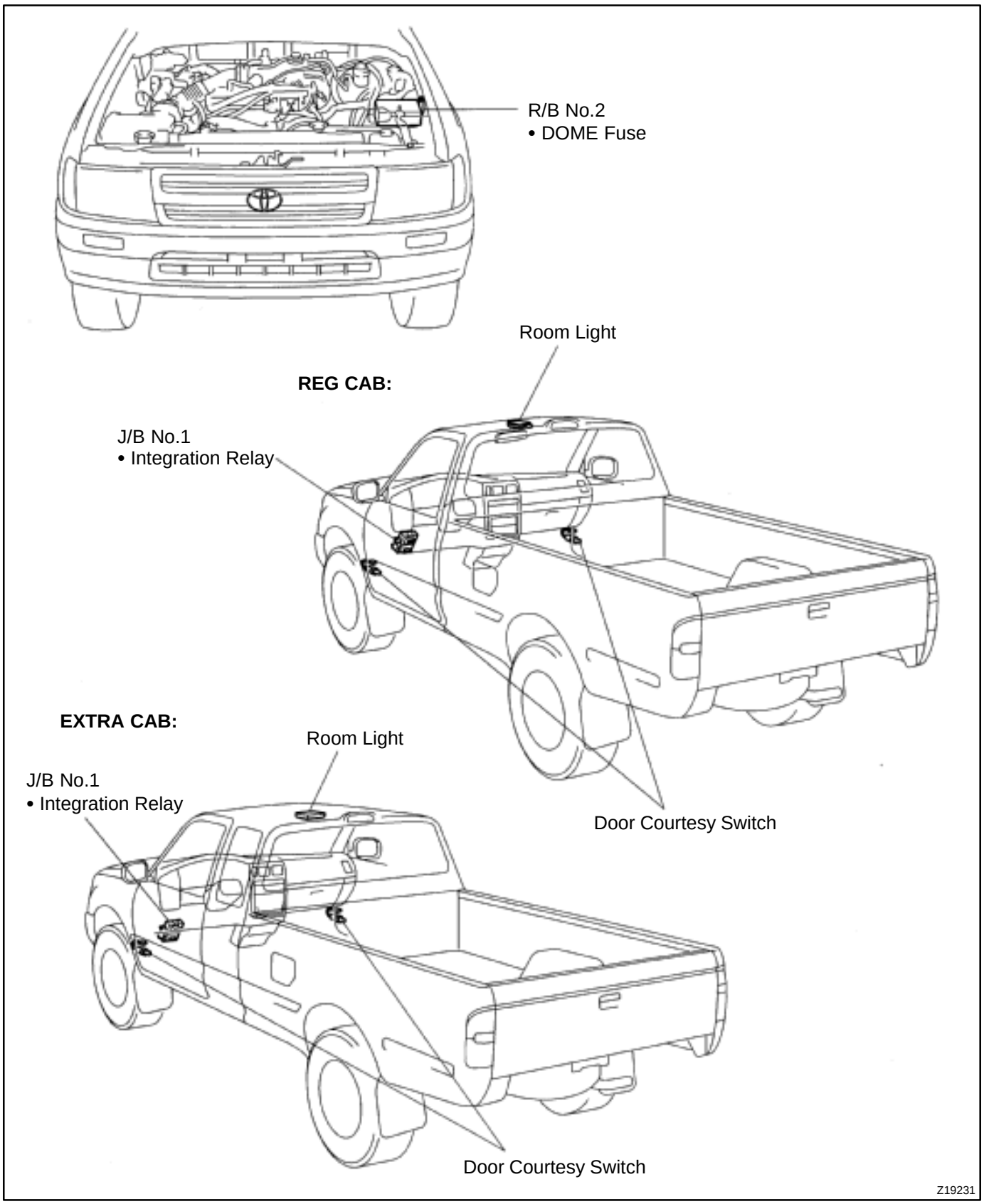

POWER SOURCE

LOCATION

BE03T–01

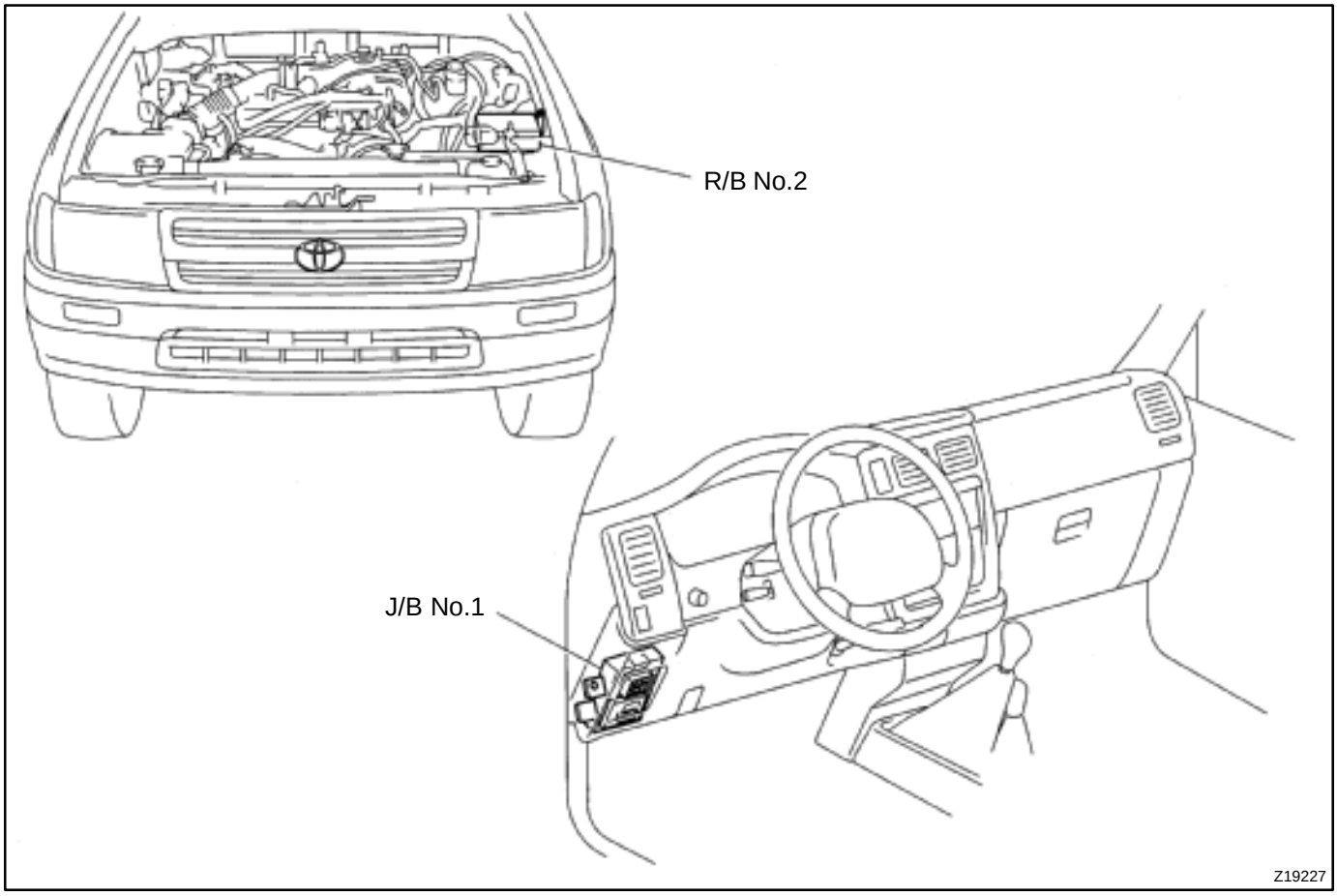

BE04G–01

INSPECTION

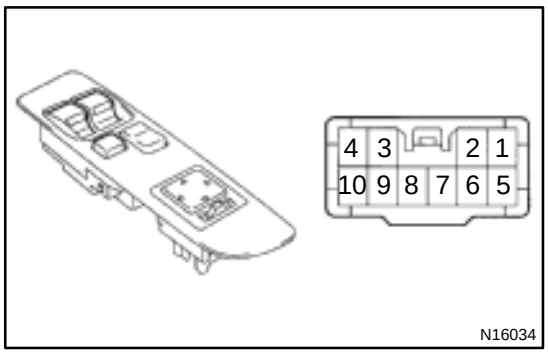

1. INSPECT DRIVER'S DOOR LOCK CONTORL SWITCH CONTINUITY

Switch position	Tester connection	Specified condition
LOCK	1 – 5, 2 – 6	Continuity
OFF	–	No continuity
UNLOCK	2 – 5, 1 – 6	Continuity

If continuity is not as specified, replace the switch.

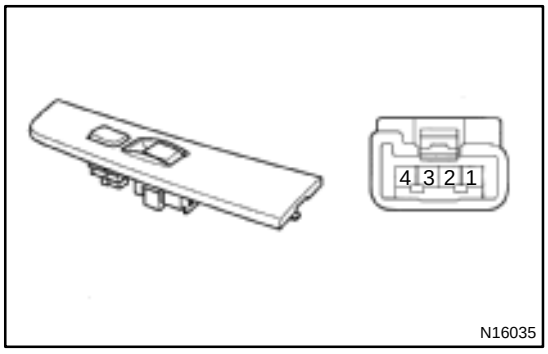

2. INSPECT PASSENGER'S DOOR LOCK CONTORL SWITCH CONTINUITY

Switch position	Tester connection	Specified condition
LOCK	3 – 4	Continuity
OFF	–	No continuity
UNLOCK	2 – 4	Continuity

If continuity is not as specified, replace the switch.

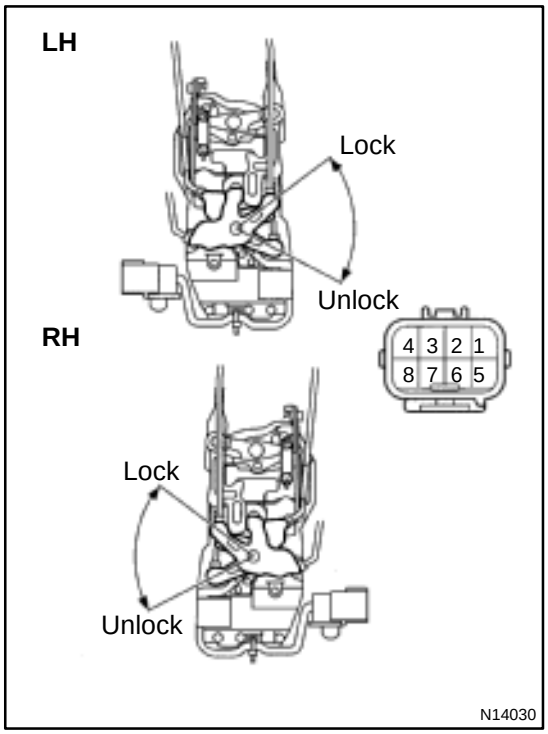

3. INSPECT DOOR KEY LOCK AND UNLOCK SWITCH CONTINUITY

LH:

Switch position	Tester connection to terminal number	Specified condition
LOCK	5 – 6	Continuity
OFF	–	No continuity
UNLOCK	1 – 5	Continuity

If continuity is not as specified, replace the switch.

RH:

Switch position	Tester connection to terminal number	Specified condition
LOCK	8 – 7	Continuity
OFF	–	No continuity
UNLOCK	4 – 8	Continuity

If continuity is not as specified, replace the switch.

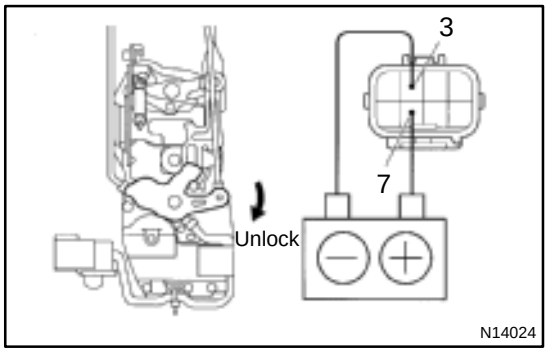

4. INSPECT DRIVER'S DOOR LOCK MOTOR OPERATION

(a) Connect the positive (+) lead from the battery to terminal 7 and the negative (–) lead to terminal 3, and check that the door lock link moves to UNLOCK position.

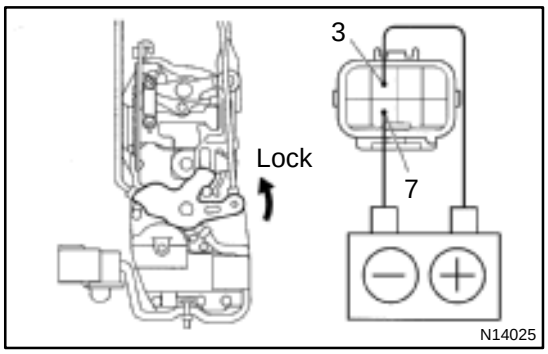

(b) Remove the polarity and check that the door lock link moves to LOCK position.

If operation is not as specified, replace the door lock assembly.

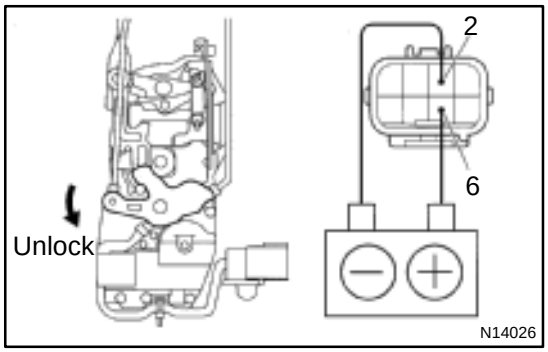

5. INSPECT PASSENGER'S DOOR LOCK MOTOR OPERATION

(a) Connect the positive (+) lead from the battery to terminal 6 and the negative (–) lead to terminal 2, and check that the door lock moves to UNLOCK position.

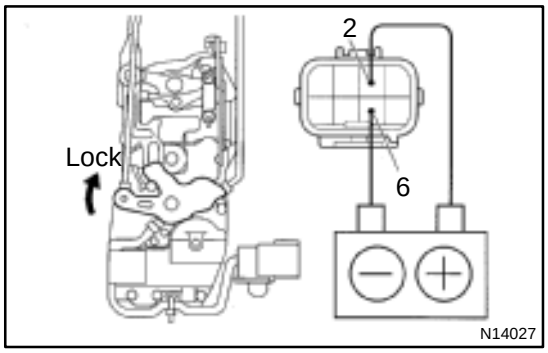

(b) Remove the polarity and check that the door lock link moves to LOCK position.

If operation is not as specified, replace the door lock assembly.

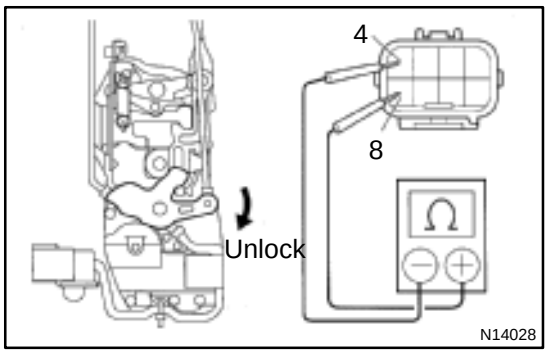

6. INSPECT DRIVER'S DOOR UNLOCK DETECTION SWITCH CONTINUITY

Switch position	Tester connection	Specified condition
OFF (Door Lock set to LOCK)	–	No continuity
ON (Door Lock set to UNLOCK)	4 – 8	Continuity

If continuity is not as specified, replace the switch.

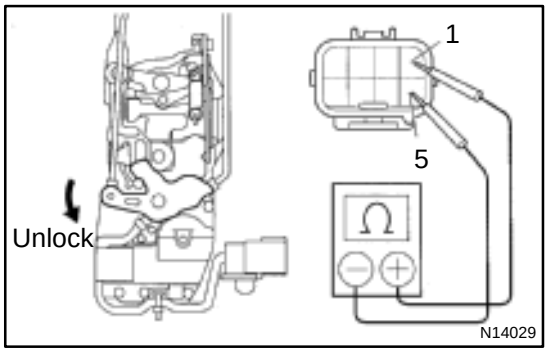

7. INSPECT PASSENGER'S DOOR UNLOCK DETECTION SWITCH CONTINUITY

Switch position	Tester connection	Specified condition
OFF (Door Lock set to LOCK)	–	No continuity
ON (Door Lock set to UNLOCK)	1 – 5	Continuity

If continuity is not as specified, replace the switch.

POWER DOOR LOCK CONTROL SYSTEM

BE04F–02

LOCATION

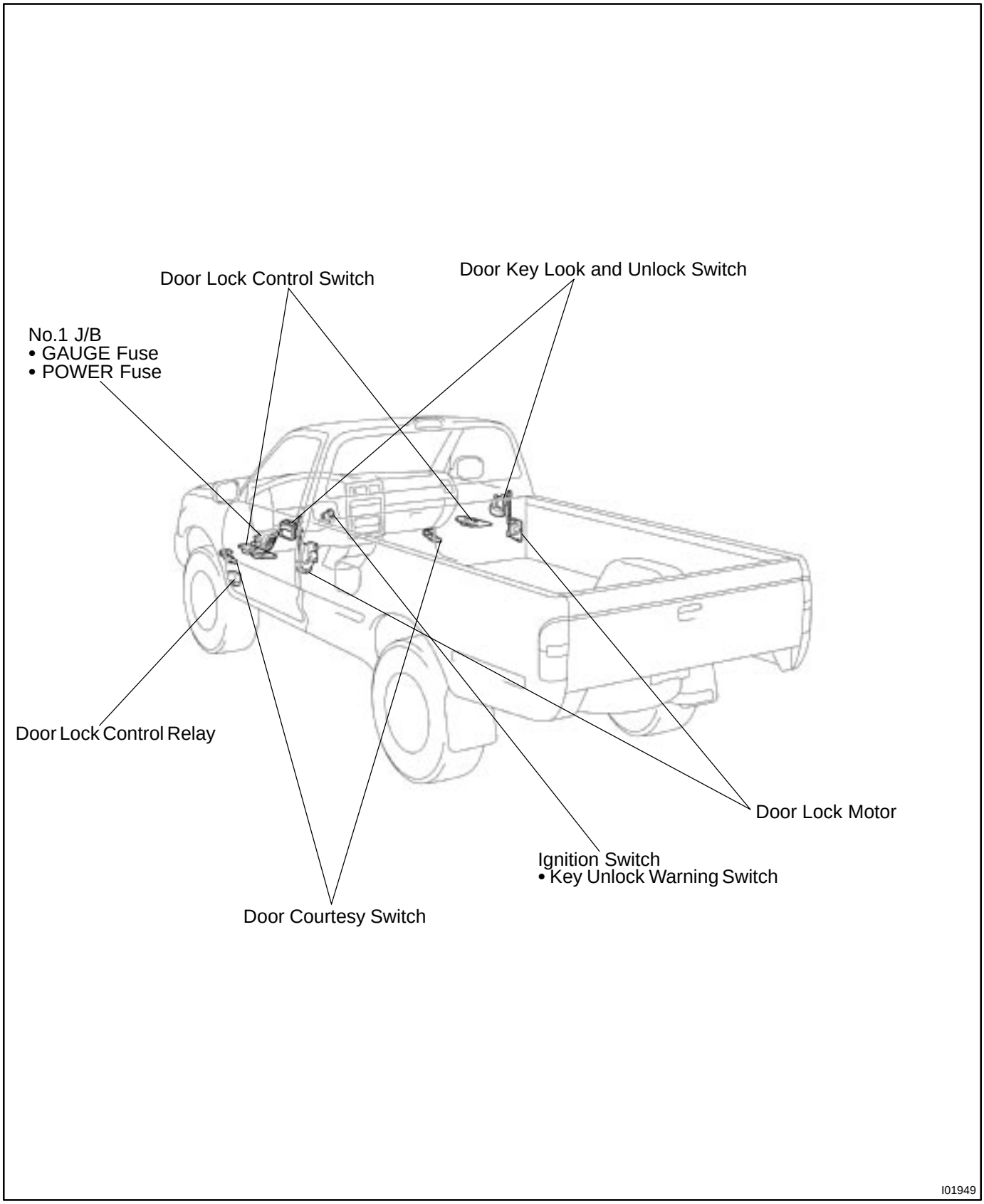

BE04E–01

INSPECTION

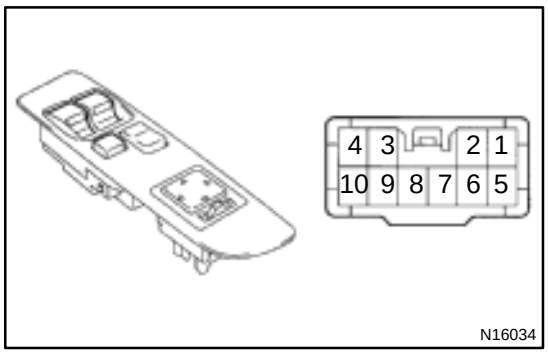

1. INSPECT POWER WINDOW MASTER SWITCH CONTINUITY

Driver's switch(Window unlock):

Switch position	Tester connection	Specified condition
UP	3 – 9, 4 – 6	Continuity
OFF	3 – 4 – 6	Continuity
DOWN	3 – 6, 4 – 9	Continuity

Driver's switch(Window lock):

Switch position	Tester connection	Specified condition
UP	3 – 9, 4 – 6	Continuity
OFF	3 – 4 – 6	Continuity
DOWN	3 – 6, 4 – 9	Continuity

Passenger's switch(Window unlock):

Switch position	Tester connection	Specified condition
UP	6 – 7, 9 – 10	Continuity
OFF	6 – 7 – 10	Continuity
DOWN	7 – 9, 6 – 10	Continuity

Passenger's switch(Window lock):

Switch position	Tester connection	Specified condition
UP	9 – 10	Continuity
OFF	7 – 10	Continuity
DOWN	7 – 9	Continuity

If continuity is not as specified, replace the switch.

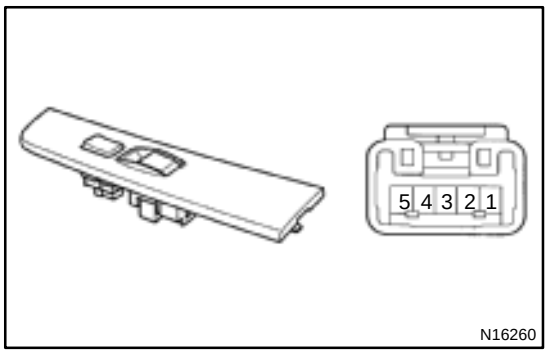

2. INSPECT POWER WINDOW SWITCH CONTINUITY

Switch position	Tester connection	Specified condition
UP	1 – 2, 3 – 4	Continuity
OFF	1 – 2, 3 – 5	Continuity
DOWN	3 – 5, 1 – 4	Continuity

If continuity is not as specified, replace the switch.

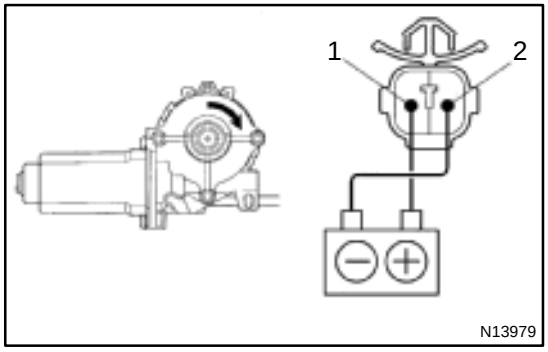

3. Driver's Side: INSPECT POWER WINDOW MOTOR OPERATION

(a) Connect the positive (+) lead from the battery to terminal 1 and negative (–) lead to terminal 2. Check that the motor turns clockwise.

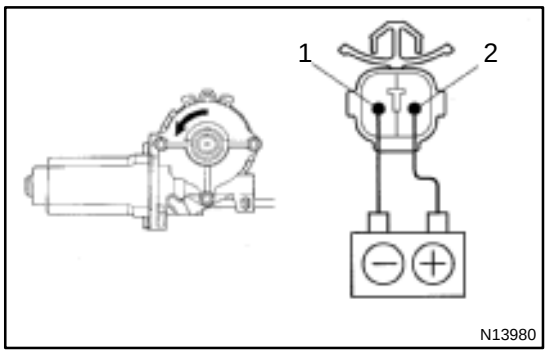

(b) Reverse the polarity, check that the motor turns counterclockwise.

If operation is not as specified, replace the motor.

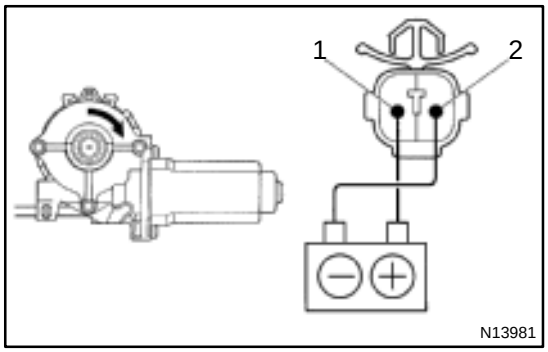

4. Passenger's Side:
INSPECT POWER WINDOW MOTOR OPERATION

(a) Connect the positive (+) lead from the battery to terminal 1 and negative (–) lead to terminal 2. Check that the motor turns counterclockwise.

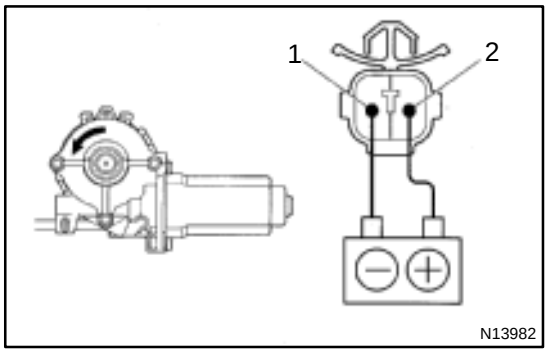

(b) Reverse the polarity, check that the motor turns clockwise.

If operation is not as specified, replace the motor.

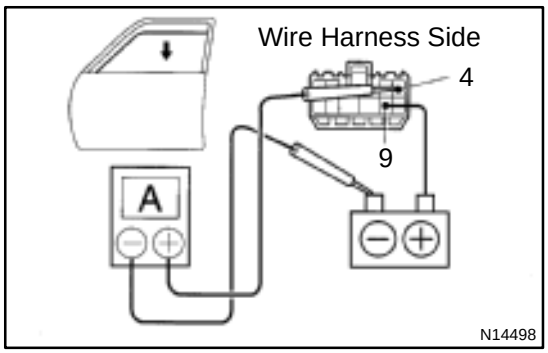

5. Using an ammeter:
INSPECT ONE TOUCH POWER WINDOW SYSTEM

(a) Disconnect the connector of the master switch.
(b) Connect the positive (+) lead from the ammeter to terminal 4 on the wire harness side connector and the negative (–) lead to negative terminal of the battery.
(c) Connect the positive (+) lead from the battery to terminal 9 on the wire harness side connector.
(d) As the window goes down, check that the current increases to approximately 7.0 A.
(e) Check that the current increases to approximately 14.5 A or more when the window stops going down.

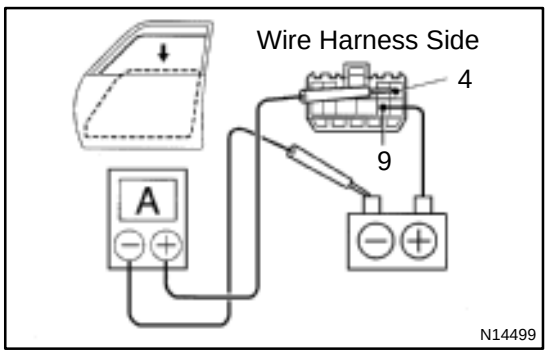

HINT:
The circuit breaker opens for some 4 – 40 seconds after the window stops going down, so that the check must be done before the circuit breaker operates.

If the operation is as specified, replace the master switch.

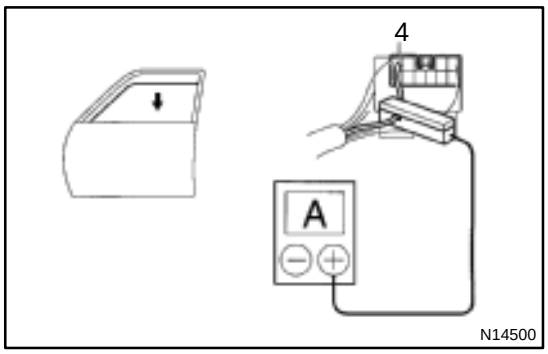

6. Using an ammeter with a current – measuring probe: INSPECT ONE TOUCH POWER WINDOW SYSTEM

(a) Remove the master switch with the connector connected.
(b) Attach a current–measuring probe to terminal 3 of the wire harness.
(c) Turn the ignition switch ON and set the power window switch in the down position.
(d) As the window goes down, check that the current increases to approximately 7.0 A.

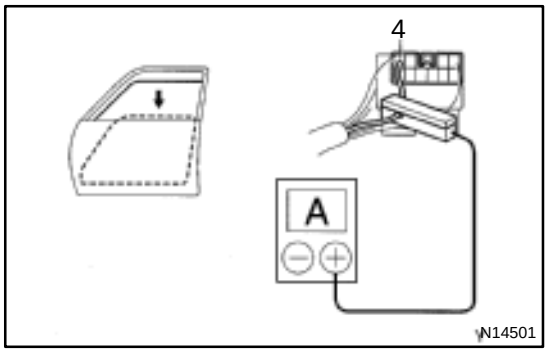

(e) Check that the current increases to approximately 14.5 A or more when the window stops going down.

HINT:
The circuit breaker opens for some 4 – 40 seconds after the window stops going down, so that the check must be done before the circuit breaker operates.
If operation is as specified, replace the master switch.

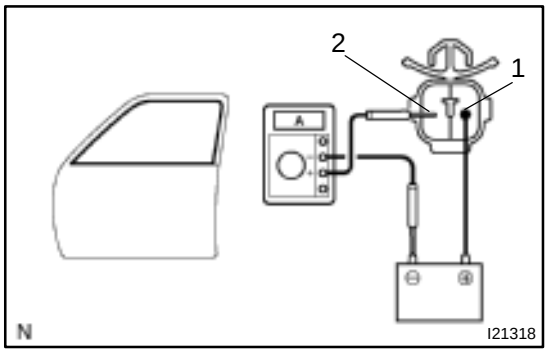

7. Driver's door:
INSPECT POWER WINDOW MOTOR PTC THERMISTOR OPERATION

(a) Disconnect the connector from the power window motor.
(b) Connect the positive (+) lead from the ammeter to terminal 2 on the wire harness side connector and the negative (–) lead to negative terminal of the battery.
(c) Connect the positive (+) lead from the battery to terminal 1 on the wire harness side connector, and raise the window to the fully position.
(d) Continue to apply voltage, and check that the current changes to less than 1 A with 4 to 90 seconds.

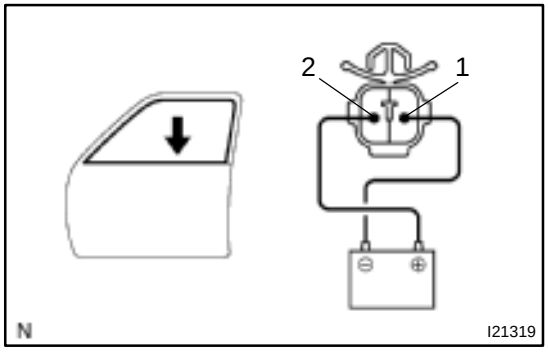

(e) Disconnect the leads from terminals.
(f) Approximately 60 seconds later, connect the positive (+) lead from the battery to terminal 2 and negative (–) lead to terminal 1, and check that the window begins to descended.

If operation is not as specified, replace the motor.

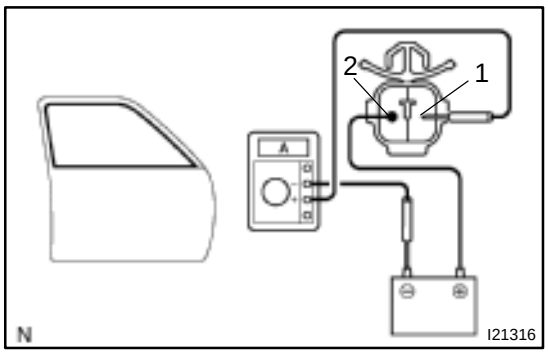

8. Passenger's door:
INSPECT POWER WINDOW MOTOR PTC THERMISTOR OPERATION

(a) Disconnect the connector from the power window motor.
(b) Connect the positive (+) lead from the ammeter to terminal 1 on the wire harness side connector and the negative (–) lead to negative terminal of the battery.
(c) Connect the positive (+) lead from the battery to terminal 2 on the wire harness side connector, and raise the window to the fully position.
(d) Continue to apply voltage and check that the current changes to less than 1 A within 4 to 90 seconds.
(e) Disconnect the leads from the terminals.

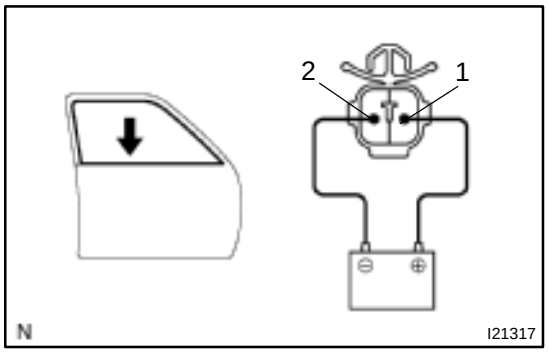

(f) Approximately 60 seconds later, connect the positive (+) lead from the battery to terminal 1 and the negative (–) lead to terminal 2, and check that the window begins to descend.

If operation is not as specified, replace the motor.

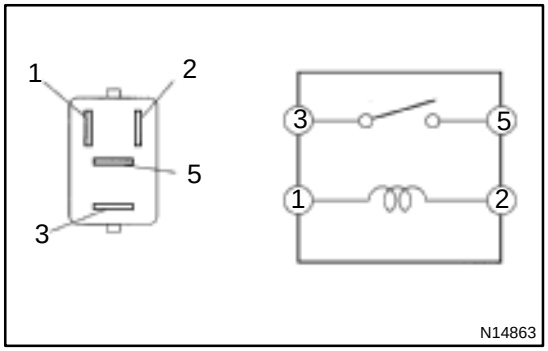

9. INSPECT POWER MAIN RELAY CONTINUITY

Condition	Tester connection	Specified condition
Constant	1 – 2	Continuity
Apply B+ between terminals 1 and 2.	3 – 5	Continuity

If continuity is not as specified, replace the relay.

10. INSPECT DOOR LOCK RELAY (See page BE–52)

POWER WINDOW CONTROL SYSTEM

LOCATION

BE04D–02

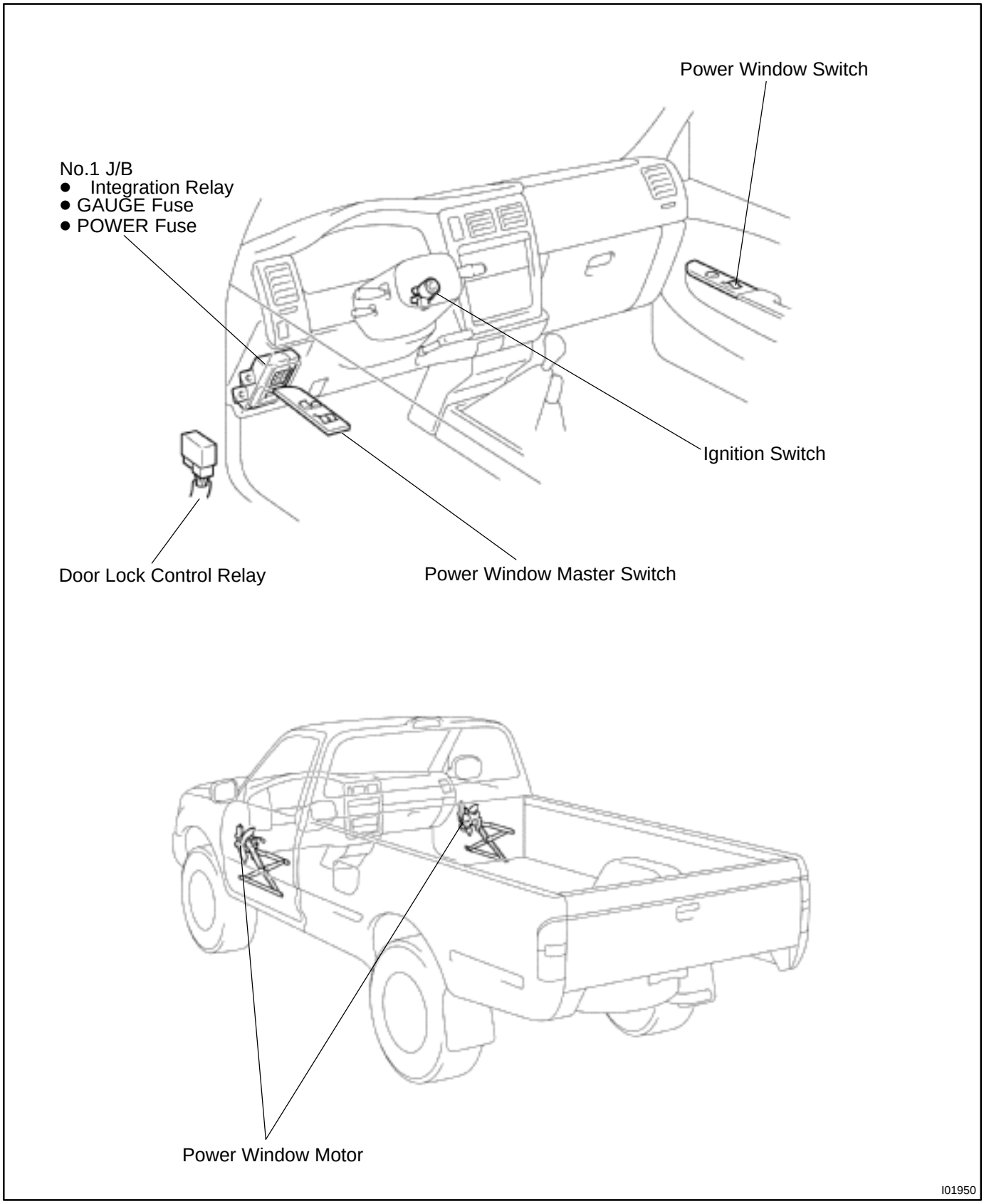

BODY ELECTRICAL SYSTEM

BE03R–01

PRECAUTION

HINT:

Take care to observe the following precautions when performing inspections or removal and replacement of body electrical related parts.

1. HEADLIGHT SYSTEM

Halogen bulbs have pressurized gas inside and require special handling. They can burst if scratched or dropped. Hold a bulb only by its plastic or metal case. Don't touch the glass part of a bulb with bare hands.

2. SRS (SUPPLEMENTAL RESTRAINT SYSTEM)

The TOYOTA TACOMA is equipped with an SRS (Supplemental Restraint System) such as the driver airbag and front passenger airbag. Failure to carry out service operation in the correct sequence could cause the SRS to unexpectedly deploy during servicing, possibly leading to a serious accident. Before servicing (including removal or installation of parts, inspection or replacement), be sure to read the precautinary notices in the RS section.

3. AUDIO SYSTEM

If the negative (–) terminal cable is disconnected from the battery, the preset AM, FM 1 and FM 2 stations stored in memory are erased, so make sure to note the stations and reset them after the negative (–) terminal cable is reconnected to the battery.

4. MOBILE COMMUNICATION SYSTEM

If the vehicle is equipped with a mobile communication system, refer to precautions in the IN section.

BE03S–01

PROBLEM SYMPTOMS TABLE

HINT:

The table below will be useful for you in troubleshooting these electrical problems. The most likely causes of the malfunction are shown in the order of their probability. Inspect each part in the order shown, and replace the part when it is found to be faulty.

USA:

HEADLIGHT AND TAILLIGHT SYSTEM

Trouble	Parts name	See page
Headlight does not light up (Taillight is normal)	1. HEAD LH Fuse (No.2 R/B) 2. HEAD RH Fuse (No.2 R/B) 3. Light Control Switch 4. Headlight Dimmer Switch 5. Headlight Bulb	– – BE–17 BE–17 –
Headlight does not light up (Taillight does not light up)	1. Light Control Switch 2. Headlight Dimmer Switch 3. Headlight Bulb 4. Wire Harness	BE–17 BE–17 – –
Only one light comes on	1. HEAD LH Fuse (No.2 R/B) 2. HEAD RH Fuse (No.2 R/B) 3. Headlight Bulb 4. Wire Harness	– – – –
”Lo–Beam” does not light up	1. Headlight Control Relay (No.2 R/B) 2. Headlight Dimmer Relay (No.2 R/B) 3. Headlight Dimmer Switch 4. Headlight Bulb 5. Wire Harness	BE–17 BE–17 BE–17 – –
”Hi–Beam” does not light up	1. Headlight Control Relay (No.2 R/B) 2. Headlight Dimmer Relay (No.2 R/B) 3. Headlight Dimmer Switch 4. Headlight Bulb 5. Wire Harness	BE–17 BE–17 BE–17 – –
”Flash” does not light up	1. Headlight Control Relay (No.2 R/B) 2. Headlight Dimmer Relay (No.2 R/B) 3. Headlight Dimmer Switch 4. Headlight Bulb 5. Wire Harness	– BE–17 BE–17 BE–17 –
Taillight does not light up (Headlight does not light up)	1. TAIL Fuse (No.2 R/B) 2. Light Control Switch 3. Taillight Bulb 4. Wire Harness	– BE–17 – –
Taillight does not light up (Headlight is normal)	1. TAIL Fuse (No.2 R/B) 2. Light Control Switch 3. Taillight Control Relay (No.2 R/B) 4. Taillight Bulb 5. Wire Harness	– BE–17 BE–17 – –
Only one light goes out or does not light up	1. Taillight Bulb 2. Wire Harness	– –
Rear Combination light does not light up	1. TAIL Fuse (No.2 R/B) 2. Taillight Bulb 3. Wire Harness	– – –

CANADA:
HEADLIGHT AND TAILLIGHT SYSTEM

Trouble	Parts name	See page
Only one side headlight does not light up.	1. Headlight Bulb 2. Wire Harness	– –
”Lo–Beam” does not light up. (ALL)	1. D.R.L. Relay 2. Headlight Dimmer Relay (No.2 R/B) 3. Headlight Control Relay (No.2 R/B) 4. Headlight Dimmer Switch 5. Wire Harness	BE–17 BE–17 BE–17 BE–17 –
”Lo–Beam” does not light up. (ONE SIDE)	1. HEAD (LO LH) Fuse (No.2 R/B) 2. HEAD (LO RH) Fuse (No.2 R/B) 3. Headlight Bulb 4. Wire Harness	– – – –
”Hi–Beam” does not light up. (ALL)	1. DRL Fuse (No.2 R/B) 2. Headlight Dimmer Relay (No.2 R/B) 3. Headlight Control Relay (No.2 R/B) 4. Headlight Dimmer Switch 5. Wire Harness	 BE–17 BE–17 BE–17 –
”Hi–Beam” does not light up. (ONE SIDE)	1. HEAD (HI LH) Fuse (No.2 R/B) 2. HEAD (HI RH) Fuse (No.2 R/B) 3. Headlight Bulb 4. Wire Harness	– – – –
”Flash” does not light up.	1. Headlight Dimmer Switch 2. Wire Harness	BE–17 –
Headlight does not light up. (Taillight is normal)	1. Headlight Control Relay (No.2 R/B) 2. D.R.L. Relay 3. D.R.L. No.4 Relay 4. D.R.L. Resistor 5. Headlight Dimmer Switch 6. Light Control Switch 7. Headlight Bulb 8. Wire Harness	BE–17 BE–17 BE–17 BE–17 BE–17 BE–17 – –
Headlight does not light up. (Taillight does not light up)	1. Headlight Control Relay (No.2 R/B) 2. D.R.L. Relay 3. D.R.L. No.4 Relay 4. D.R.L. Resistor 5. Headlight Dimmer Switch 6. Light Control Switch 7. Headlight Bulb 8. Wire Harness	BE–17 BE–17 BE–17 BE–17 BE–17 BE–17 – –
Only one side taillight does not light up.	1. Taillight Bulb 2. Wire Harness	– –
Taillight does not light up. (Headlight is normal)	1. TAIL Fuse (No.2 R/B) 2. Taillight Control Relay (No.2 R/B) 3. Light Control Switch 4. Taillight Bulb 5. Wire Harness	– BE–17 BE–17 – –
Taillight does not light up. (Headlight does not light up)	1. Light Control Switch 2. Taillight Bulb 3. Wire Harness	BE–17 – –
Headlight does not light up with light control SW in HEAD.	1. Light Control Switch 2. D.R.L. Relay 3. D.R.L. No.4 Relay 4. Wire Harness	BE–17 BE–17 BE–17 –

Headlight does not go out with light control SW in OFF.	1. Headlight Control Relay (No.2 R/B) 2. Light Control Switch 3. Wire Harness	BE–17 BE–17 –
Taillight does not light up with light control SW in TAIL.	1. Taillight Control Relay (No.2 R/B) 2. Light Control Switch 3. Wire Harness	BE–17 BE–17 –
Taillight does not go out with light control SW in OFF.	1. Taillight Control Relay (No.2 R/B) 2. Light Control Switch 3. Wire Harness	BE–17 BE–17 –
Headlight does not light up with engine running, parking brake SW and light control SW in OFF.	1. ECU–B Fuse (No.1 J/B) 2. GAUGE Fuse (No.1 J/B) 3. DRL Fuse (No.2 R/B) 4. D.R.L. Relay 5. D.R.L. No.4 Relay 6. D.R.L. Resistor 7. Wire Harness 8. Generator L Terminal 9. Parking Brake Switch 10. Brake Fluid Level Warning Switch 11. Wire Harness	– – – BE–17 BE–17 BE–17 – – BE–38 BE–38 –

Light–ON Warning System:
HEADLIGHT AND TAILLIGHT SYSTEM

Trouble	Parts name	See page
”Light–on warning system” does not operate.	1. Integration Relay (No.1 J/B) 2. DOME Fuse (No.2 R/B) 3. GAUGE Fuse (No.1 J/B) 4. Door Courtesy Switch 5. Wire Harness	– – – BE–24 –

TURN SIGNAL AND HAZARD WARNING SYSTEM

Trouble	Parts name	See page
”Hazard” and ”Turn” do not light up	1. Hazard Warning Switch 2. Turn Signal Flasher 3. Wire Harness	BE–22 BE–22 –
The flashing frequency is abnormal	1. Bulb 2. Turn Signal Flasher 3. Wire Harness	– BE–22 –
Hazard warning light does not light up (Turn signal is normal)	1. HORN Fuse (No.2 R/B) 2. Wire Harness	– –
Hazard warning light does not light up in one direction	1. Hazard Warning Switch 2. Wire Harness	BE–22 –
Turn signal does not light up (Combinationmeter, wiper and washer do not operate.)	1. Ignition Switch 2. TURN Fuse (No.1 J/B) 3. Turn Signal Switch 4. Wire Harness	BE–12 – BE–22 –
Turn signal does not light up (Combinationmeter, wiper and washer are normal.)	1. Turn Fuse (No.1 J/B) 2. Turn Signal Switch 3. Wire Harness	– BE–22 –
Turn signal does not light up in one direction	1. Turn Signal Switch 2. Wire Harness	BE–22 –
Only one bulb does not light up	1. Bulb 2. Wire Harness	– –

INTERIOR LIGHT SYSTEM

Trouble	Parts name	See page
Room light does not light up	1. DOME Fuse (No.2 R/B) 2. Integration Relay (No.1 J/B) 3. Room Light Switch 4. Door Courtesy Switch 5. Bulb 6. Wire Harness	– – BE–24 BE–24 – –
Room light remains always on	1. Room Light Switch 2. Door Courtesy Switch 3. Wire Harness	BE–24 BE–24 –

BACK–UP LIGHT SYSTEM

Trouble	Parts name	See page
Back–Up Light does not light up	1. CIG Fuse (No.1 J/B) 2. GAUGE Fuse (No.1 J/B) 3. Ignition Switch 4. Column A/T: Back–Up Light Relay 5. Back–Up Light Switch (M/T) 6. PNP Switch (A/T) 7. Bulb 8. Wire Harness	– – – BE–12 BE–27 DI–389 AT–2 – –
Back–Up Light remains always on	1. Wire Harness	–
Only one light does not light up	1. Bulb 2. Wire Harness	– –

STOP LIGHT SYSTEM

Trouble	Parts name	See page
Stop light does not light up	1. STOP Fuse (No.2 R/B) 2. Stop Light Switch 3. Bulb 4. Wire Harness	– BE–29 – –
Stop light remains always on	1. Stop Light Switch 2. Wire Harness	BE–29 –
Only one light does not light up	1. Wire Harness 2. Bulb	– –

WIPER AND WASHER SYSTEM

Trouble	Parts name	See page
Wiper does not operate or turn to off position	1. WIPER Fuse (No.1 J/B) 2. Ignition Switch 3. Wiper and Washer Switch 4. Wiper Motor 5. Wire harness	– BE–12 BE–31 BE–31 –
Wiper does not operate in INT position	1. Wiper and Washer Switch 2. Wiper Motor 3. Wire Harness	BE–31 BE–31 – –
Washer does not operate	1. Wiper and Washer Switch 2. Washer Hose and Nozzle 3. Washer Motor 4. Wire Harness	BE–31 – BE–31 –

COMBINATION METER (Meter, Gauges and Illumination)

Trouble	Parts name	See page
Tachometer and Engine Coolant Temperature Gauge do not operate	1. GAUGE Fuse (No.1 J/B) 2. Meter Circuit 3. Wire Harness	– BE–36 –
Fuel Gauge does not operate	1. GAUGE Fuse (No.1 J/B) 2. Meter Circuit 3. Wire Harness	– BE–36 –
Speedometer does not operate	1. Vehicle speed sensor 2. Meter Circuit 3. Wire Harness	– – –
Tachometer does not operate	1. Meter Circuit 2. Igniter 3. Wire Harness	BE–36 – –
Fuel Gauge does not operate or abnormal operation	1. Fuel Receiver Gauge 2. Fuel Sender Gauge 3. Meter Circuit 4. Wire Harness	BE–38 BE–38 BE–36 –
Engine Coolant Temperature Gauge does not operate or abnormal operation	1. Engine Coolant Temperature Receiver Gauge 2. Meter Circuit 3. Wire Harness	BE–38 BE–36 –
All illumination lights do not light up	1. PANEL Fuse (No.2 R/B) 2. Light Control Rheostat 3. Wire Harness	– BE–38 –
Brightness does not change even when rheostat turned	1. Bulb 2. Light Control Rheostat 3. Wire Harness	– BE–38 –
Only one illumination light does not light up	1. Bulb	–

COMBINATION METER (Warning Lights)

Trouble	Parts name	See page
Warning lights do not light up (Except Discharge)	1. GAUGE Fuse (No.1 J/B) 2. IGN Fuse (No.1 J/B) 3. Meter Circuit 4. Wire Harness	– – BE–36 –
Low oil pressure warning light does not light up	1. Bulb 2. Meter Circuit 3. Low Oil Pressure Warning Switch 4. Wire Harness	– BE–36 BE–38 –
Fuel level warning light does not light up	1. Bulb 2. Meter Circuit 3. Fuel Level Warning Switch	– BE–36 BE–38
Malfunction indicator does not light up	1. Bulb 2. ECM 3. Wire Harness	– DI–3 DI–182 –
Seat belt warning light does not light up	1. Bulb 2. Integration Relay (No.1 J/B) 3. Buckle Switch 4. Wire Harness	– – BE–38 –

Discharge warning light does not light up	1. IGN Fuse (No.1 J/B) 2. Bulb 3. Wire Harness 4. Generator	– – – –
Brake warning light does not light up	1. Bulb 2. Meter Circuit 3. Parking Brake Switch 4. Brake Fluid Level Warning Switch	– BE–36 BE–38 BE–38

COMBINATION METER (Indicator Light)

Trouble	Parts name	See page
O/D OFF indicator light does not light up	1. Bulb 2. Meter Circuit 3. O/D OFF Switch (A/T) 4. Wire Harness	– BE–36 DI–400 AT–2 –
High beam indicator light does not light up	1. Bulb 2. Meter Circuit 3. Wire Harness 4. Headlight and Taillight System	– BE–36 – –
Turn indicator light does not light up	1. Bulb 2. Meter Circuit 3. Wire Harness 4. Headlight and Taillight System	– BE–36 – –
Shift indicator lights do not light up (ALL)	1. Bulb 2. Meter Circuit 3. PNP Switch (A/T) 4. Wire Harness	– BE–36 DI–389 AT–2 –
Shift indicator lights do not light up (D)	1. Bulb 2. Meter Circuit 3. PNP Switch (A/T) 4. Light Control Rheostat 5. Wire Harness	– BE–36 DI–389 AT–2 BE–38 –
Only one shift indicator does not light up	1. Bulb 2. Meter Circuit	– BE–36
Indicator lights do not light up (Except. Turn, Hi–beam)	1. GAUGE Fuse (No.1 J/B) 2. Wire Harness	– –
Cruise control indicator lights do not light up	1. Bulb 2. Meter Circuit 3. Cruise Control ECU 4. Wire Harness	– BE–36 DI–557 or DI–610 –

POWER WINDOW CONTROL SYSTEM

Trouble	Parts name	See page
Power window does not operate (Power door lock system does not operate.)	1. POWER Fuse (No.1 J/B) 2. GAUGE Fuse (No.1 J/B) 3. Integration Relay (No.1 J/B) 4. Door Lock Control Relay 5. Ignition Switch 6. Power Window Master Switch 7. Wire Harness	– – – BE–51 BE–12 BE–47 –
Power Window does not operate (Power door lock system is normal.)	1. POWER Fuse (No.1 J/B) 2. GAUGE Fuse (No.1 J/B) 3. Ignition Switch (No.1 J/B) 4. Integration Relay (No.1 J/B) 5. Door Lock Control Relay 6. Power Window Master Switch 7. Wire Harness	– – – – BE–51 BE–47 –
”One Touch Power Window System” does not operate	1. Power Window Master Switch	BE–47
Only one window glass does not move	1. Power Window Master Switch 2. Power Window Switch 3. Power Window Motor 4. Wire Harness	BE–47 BE–47 BE–47 –
”Window Lock System” does not operate	1. Power Window Master Switch	BE–47

POWER DOOR LOCK CONTROL SYSTEM

Trouble	Parts name	See page
”Door lock control system” does not operate (All)	1. GAUGE Fuse (No.1 J/B) 2. POWER Fuse (No.1 J/B) 3. Door Lock Control Relay 4. Wire Harness 5. Other Parts	– – BE–51 – –
Malfunction in Door Lock / Unlock (Using door manual switch)	1. Door Lock Control Switch 2. Door Lock Control Relay 3. Wire Harness 4. Other Parts	BE–51 BE–51 – –
Malfunction in Door Lock / Unlock (Using door manual switch and key)	1. Wire Harness 2. Other Parts	– –
Malfunction in Door Lock / Unlock (Using Key)	1. Door Key Lock and Unlock Switch 2. Door Lock Control Relay 3. Wire Harness 4. Other Parts	BE–51 BE–51 – –
Fault in 2 – Operation unlock function of Driver’s side door key Lock and Unlock switch	1. Door Key Lock and Unlock Switch 2. Door Lock Control Relay 3. Wire Harness 4. Other Parts	BE–51 BE–51 – –
Fault in key confine prevention operation	1. Key Unlock Warning Switch 2. Door Courtesy Switch 3. Door Lock Control Switch 4. Door Lock Control Relay 5. Wire Harness 6. Other Parts	BE–12 BE–24 BE–51 BE–51 – –
One door lock does not operate	1. Door Lock Motor 2. Wire Harness	BE–51 –

POWER MIRROR CONTROL SYSTEM

Trouble	Parts name	See page
Power mirror on each side does not operate at all	1. CIG Fuse (No.1 J/B) 2. Mirror Switch 3. Mirror Motor (Up/Down or Left/Right Control) 4. Wire Harness	– BE–54 BE–54 –
Left or Right power mirror does not operate at all	1. Mirror Switch 2. Mirror Motor (Up/Down or Left/Right Control) 3. Wire Harness	BE–54 BE–54 –
Up/Down Control of left or right power mirror does not operate	1. Mirror Motor (Up/Down Control) 2. Wire Harness	BE–54 –
Left/Right control of left or right power mirror does not operate	1. Mirror Motor (Left/Right Control) 2. Wire Harness	BE–54 –

BE047–01

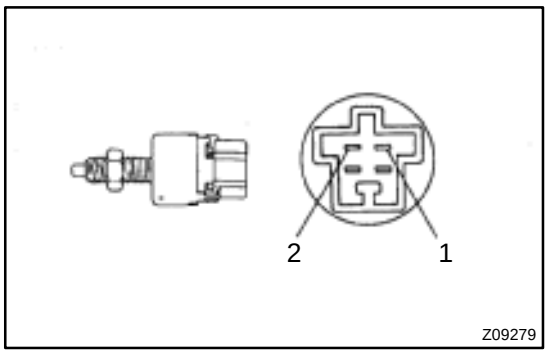

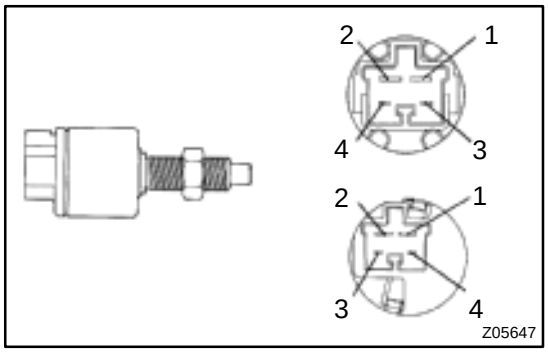

INSPECTION

1. w/o Cruise Control:
INSPECT STOP LIGHT SWITCH CONTINUITY

Switch position	Tester connection	Specified condition
Switch pin free (Brake pedal depressed)	1 – 2	Continuity
Switch pin pushed in (Brake pedal released)	–	No continuity

If continuity is not as specified, replace the switch.

2. w/ Cruise Control:
INSPECT STOP LIGHT SWITCH CONTINUITY

Switch position	Tester connection	Specified condition
Switch pin free (Brake pedal depressed)	1 – 2	Continuity
Switch pin pushed in (Brake pedal released)	–	No continuity

If continuity is not as specified, replace the switch.

STOP LIGHT SYSTEM

LOCATION

BE046–01

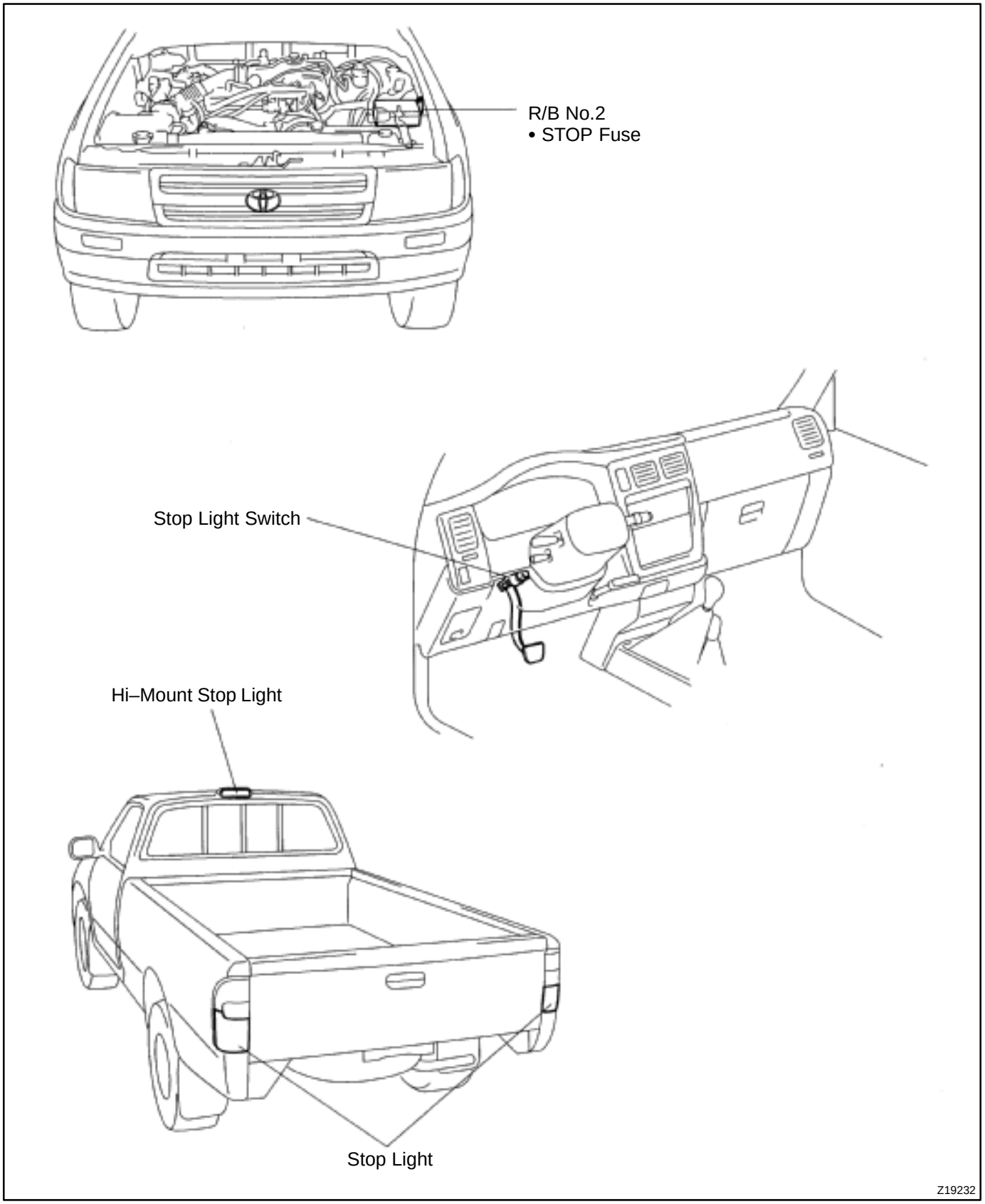

BE041–01

INSPECTION

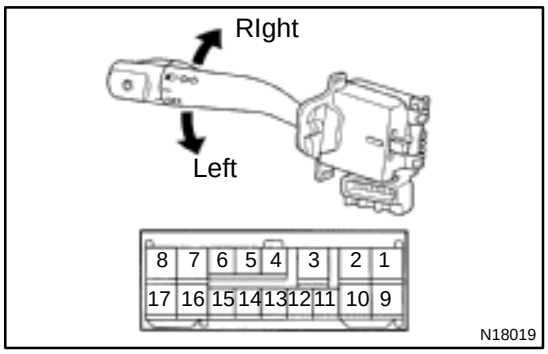

1. INSPECT TURN SIGNAL SWITCH CONTINUITY

Switch position	Tester connection	Specified condition
Left turn	1 – 2	Continuity
Neutral	–	No continuity
Right turn	2 – 3	Continuity

If continuity is not as specified, replace the switch.

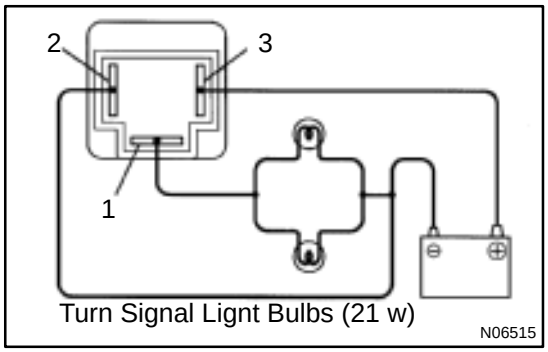

2. INSPECT TURN SIGNAL FLASHER OPERATION

(a) Connect the positive (+) lead from the battery to terminal 2 and the negative (–) lead to terminal 3.

(b) Connect the 2 turn signal light bulbs parallel to each other to terminals 1 and 3, check that the bulbs flash.

HINT:

The turn signal lights should flash 60 or 120 times per minute.
If one of the front or rear turn signal lights has an open circuit, the number of flashers will be more than 140 per minute.
If operation is not as specified, replace the flasher.

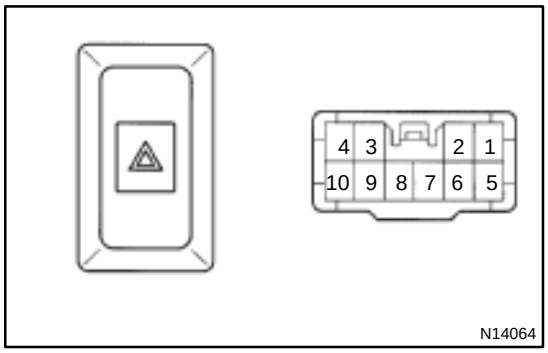

3. INSPECT HAZARD WARNING SWITCH CONTINUITY

Switch position	Tester connection	Specified condition
Switch OFF	7 – 10	Continuity
Switch ON	4 – 5 – 6 – 9 7 – 8	Continuity
Illumination circuit	2 – 3	Continuity

If continuity is not as specified, replace the switch.

TURN SIGNAL AND HAZARD WARNING SYSTEM

BE040–01

LOCATION

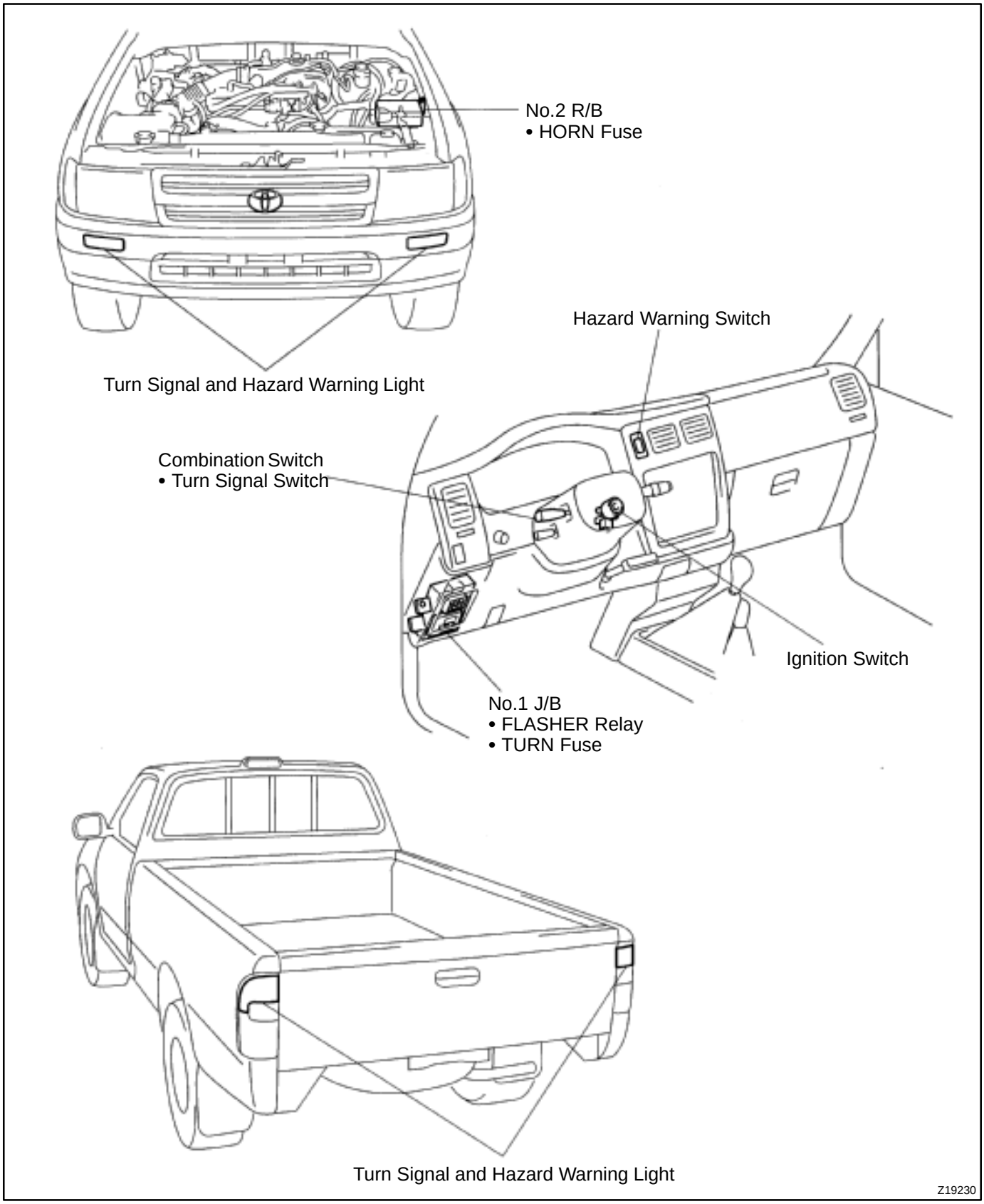

BE049–01

INSPECTION

1. INSPECT FRONT WIPER AND WASHER SWITCH CONTINUITY

w/ MIST:

Switch position	Tester connection	Specified condition
OFF	7 – 16	Continuity
MIST	7 – 17	Continuity
LO	7 – 17	Continuity
HI	8 – 17	Continuity
Washer ON	2 – 11	Continuity

w/ INTERMITTENT:

Switch position	Tester connection	Specified condition
OFF	7 – 16	Continuity
INT	7 – 16	Continuity
LO	7 – 17	Continuity
HI	8 – 17	Continuity
Washer ON	2 – 11	Continuity

If continuity is not as specified, replace the switch.

2. INSPECT INTERMITTENT OPERATION

(a) Turn the wiper switch to INT position.

(b) Turn the intermittent time control switch to FAST position.

(c) Connect the positive (+) lead from the battery to terminal 16 and the negative (–) lead to terminal 2.

(d) Connect the positive (+) lead from the voltmeter to terminal 7 and the negative (–) lead to terminal 2, check that the meter needle indicates battery positive voltage.

INT time control switch position	Voltage
FAST	Approx. 1–3 sec. Battery positive voltage 0 volt
SLOW	Approx. 10–15 sec. Battery positive voltage 0 volt

V03883

If operation is not as specified, replace the wiper and washer switch.

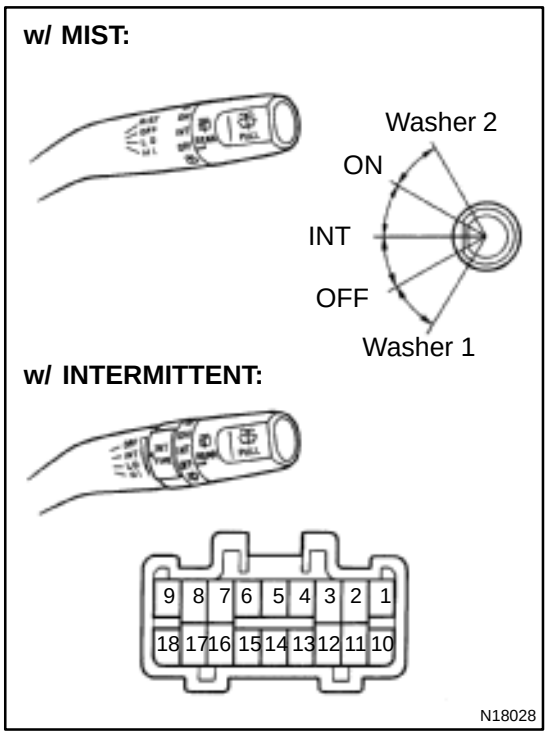

3. INSPECT REAR WIPER AND WASHER SWITCH CONTINUITY

Switch position	Tester connection	Specified condition
Washer 1	2 – 12	Continuity
Wiper OFF	–	No continuity
Wiper INT	2 – 13	Continuity
Wiper ON	2 – 10	Continuity
Washer 2	2 – 10 – 12	Continuity

If continuity is not as specified, replace the switch.

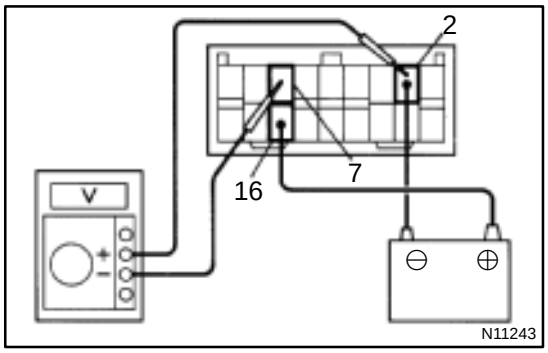

4. INSPECT WASHER LINKED OPERATION

(a) Connect the positive (+) lead from the battery to terminal 16 and the negative (–) lead to terminal 2.
(b) Connect the positive (+) lead from the voltmeter to terminal 7 and the negative (–) lead to terminal 2.
(c) Push in the washer switch, and check that the voltage changes as shown in the table.

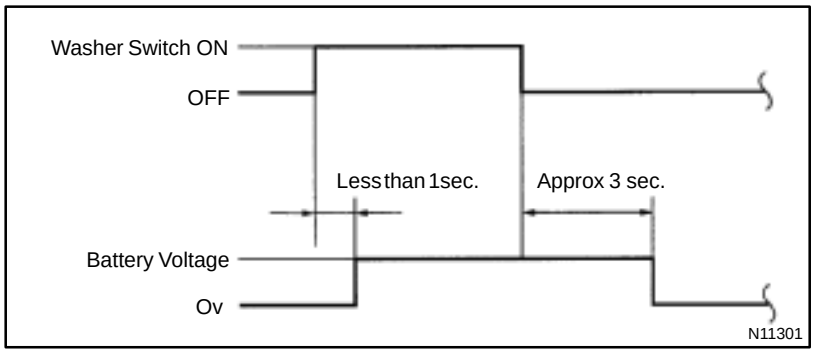

If operation is not as specified, replace the wiper and washer switch.

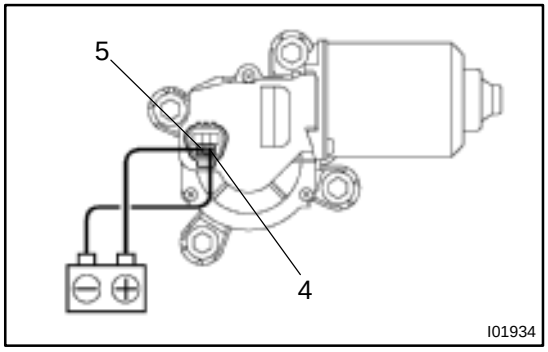

5. Low Speed: INSPECT WIPER MOTOR OPERATION

Connect the positive (+) lead from the battery to terminal 5 and the negative (–) lead from the battery to the motor body or terminal 4, and check that the motor operates at low speed.
If operation is not as specified, replace the motor.

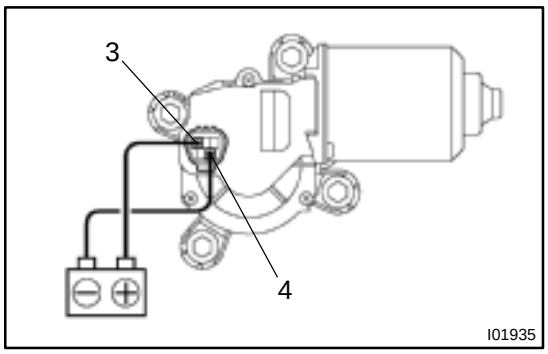

6. High Speed:
INSPECT WIPER MOTOR OPERATION

Connect the positive (+) lead from the battery to terminal 3 and the negative (–) lead from the battery to the motor body or terminal 4, and check that the motor operates at high speed.

If operation is not as specified, replace the motor.

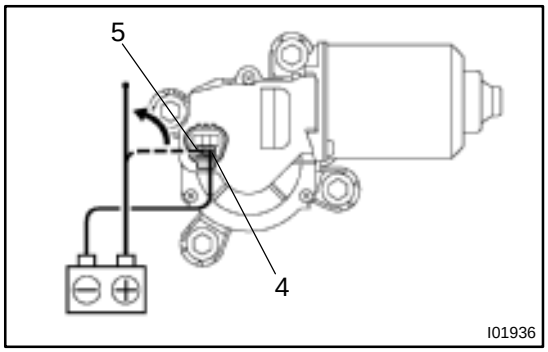

7. Stopping at Stop Position:
INSPECT WIPER MOTOR OPERATION

(a) Operate the motor at low speed and stop the motor operation anywhere except at the stop position by disconnecting positive (+) lead from terminal 5.

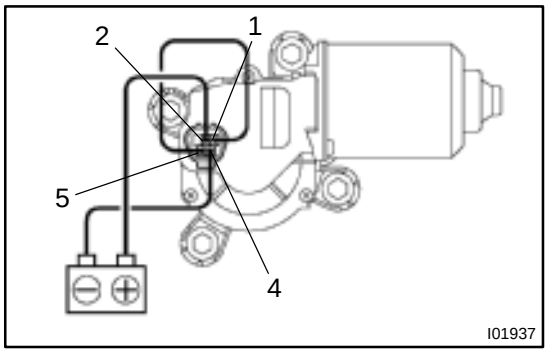

(b) Connect terminals 1 and 5.

(c) Connect the positive (+) lead from the battery to terminal 2 and the negative (–) lead from the battery to the motor body or terminal 4, and check that the motor stops running at the stop position after the motor operates again.

If operation is not as specified, replace the motor.

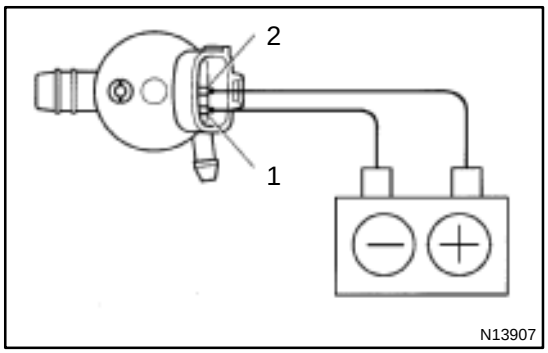

8. INSPECT WIPER MOTOR OPERATION

Connect the positive (+) lead from the battery to terminal 2 and the negative (–) lead to terminal 1, and check that the motor operates.

NOTICE:

These tests must be performed quickly (within 20 seconds) to prevent the coil from burning out.

If operation is not as specified, replace the motor.

WIPER AND WASHER SYSTEM

BE048–01

LOCATION

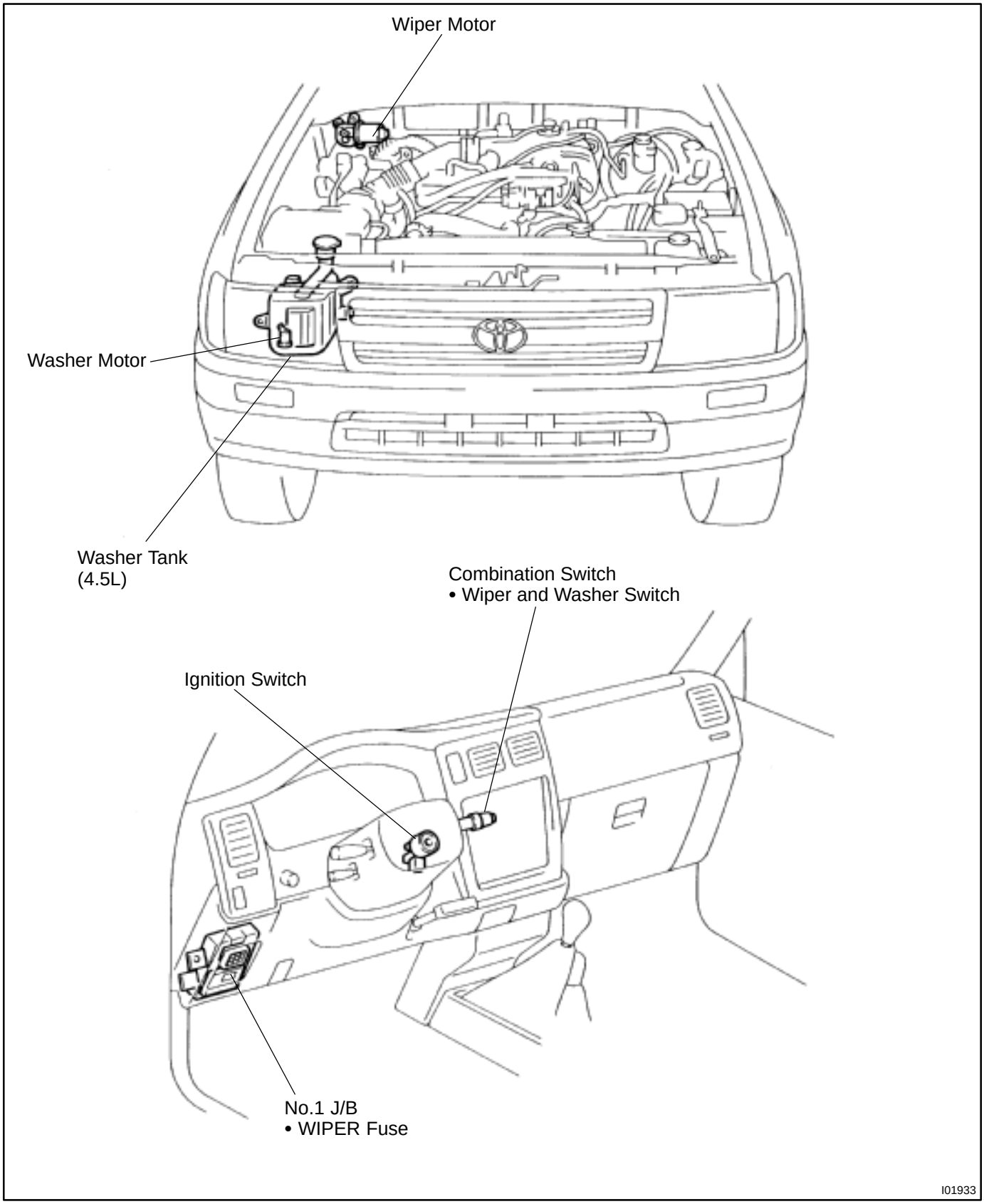

ABS ACTUATOR

BR05P–02

COMPONENTS

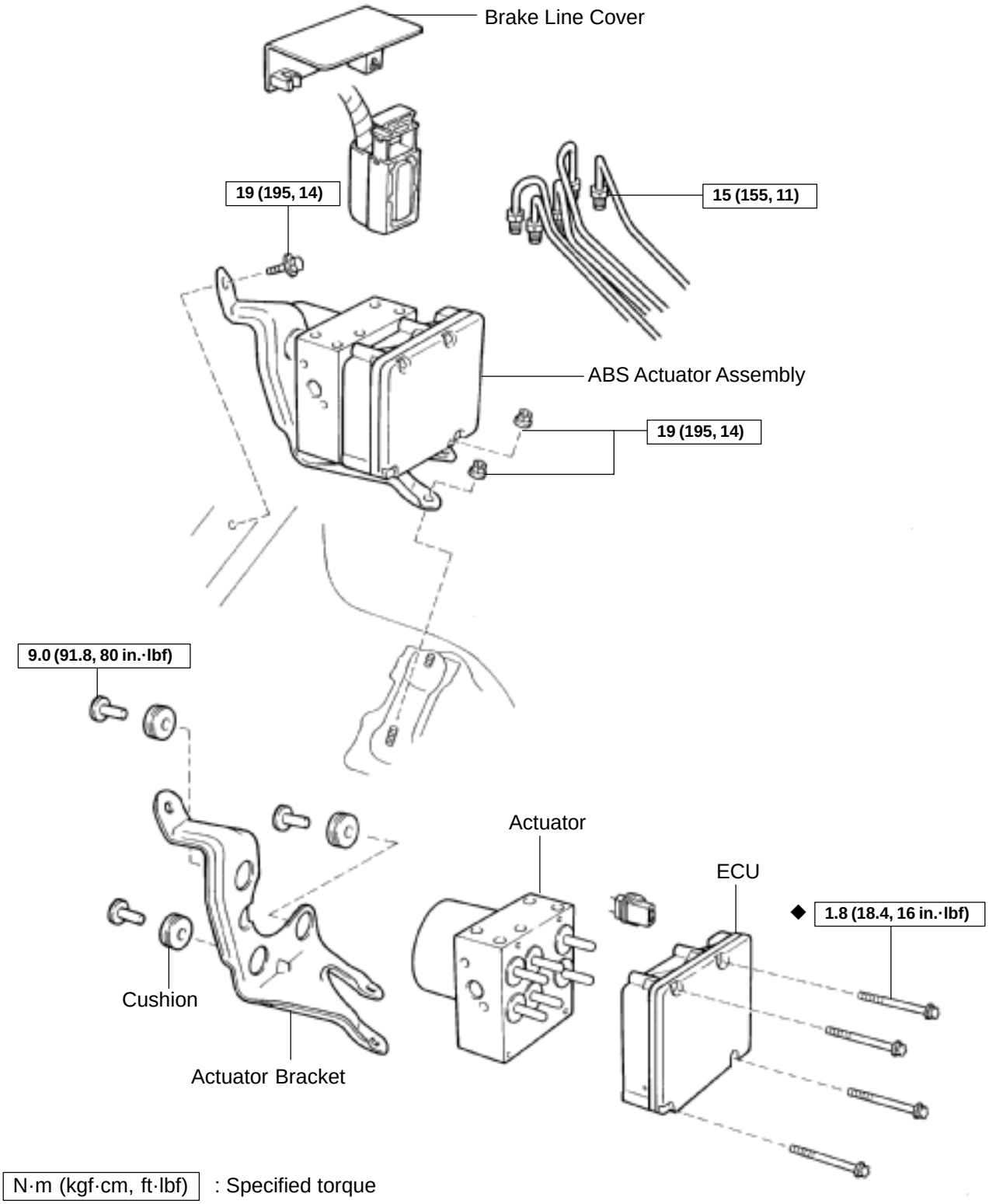

N·m (kgf·cm, ft·lbf) : Specified torque

◆ Non–reusable part

F00787

BR05R–02

DISASSEMBLY

1. DISCONNECT CONNECTOR

2. REMOVE ECU

(a) Using a E5 torx wrench, remove the 4 screws.

Torque: 1.8 N·m (18.4 kgf·cm, 16 in.·lbf)

(b) Remove the ECU from the actuator.

NOTICE:

Protect the actuator in order to prevent sealing surface from getting dirty and causing damage on the valve body.

If the dirt and the like is stuck to the sealing surface, use plastic tools or soft objects to remove the dirt. Do not use chemical solvents.

BR05T–02

INSTALLATION

Installation is in the reverse order of removal (See page BR–58).

HINT:

After installation, fill the brake reservoir with brake fluid, bleed brake system (See page BR–4) and check for leaks.

BR05S–01

REASSEMBLY

Reassembly is in the reverse order of disassembly (See page BR–59).

BR05Q–02

REMOVAL

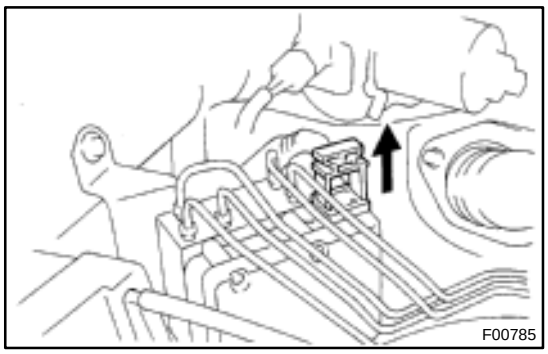

1. REMOVE BRAKE LINE COVER

2. DISCONNECT CONNECTOR

Pull out the release bar, and disconnect the connector.

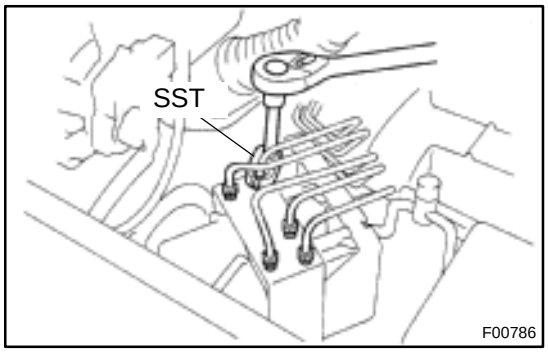

3. DISCONNECT BRAKE LINES

Using SST, disconnect the 5 brake lines from the ABS actuator.

SST 09023–00100

Torque: 15 N·m (155 kgf·cm, 11 ft·lbf)

4. REMOVE ABS ACTUATOR ASSEMBLY

Remove the bolt, 2 nuts and ABS actuator assembly.

Torque: 19 N·m (195 kgf·cm, 14 ft·lbf)

5. REMOVE ABS ACTUATOR

Using a T25 torx wrench, remove the 3 bolts and ABS actuator from actuator bracket.

Torque: 9.0 N·m (91.8 kgf·cm, 80 in.·lbf)

BR04R–02

COMPONENTS

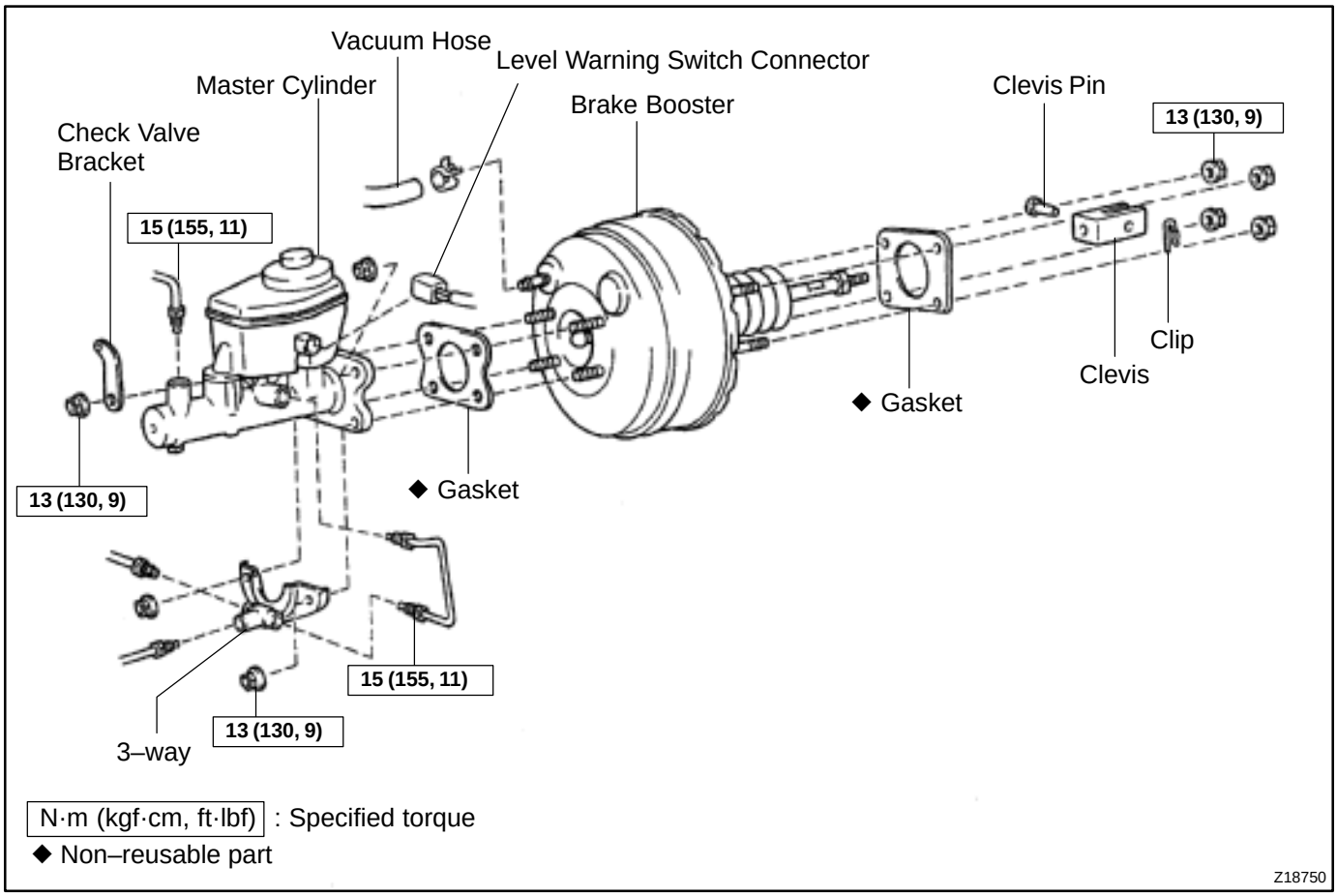

BR04T–02

INSTALLATION

1. INSTALL BRAKE BOOSTER

(a) Install the booster and a new gasket.

(b) Install the clevis to the operating rod.

(c) Install and torque the booster installation nuts.
Torque: 13 N·m (130 kgf·cm, 9 ft·lbf)

(d) Install the clevis pin into the clevis and brake pedal, and install the clip to the clevis pin.

(e) Install the pedal return spring.

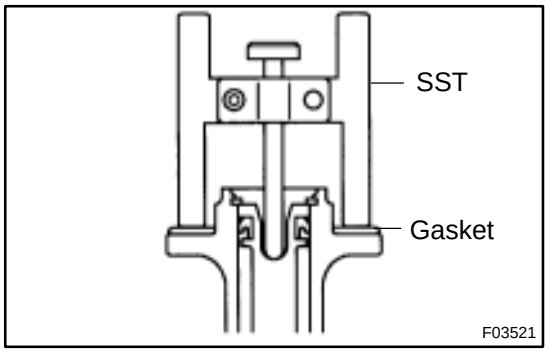

2. ADJUST LENGTH OF BOOSTER PUSH ROD

(a) Install a new gasket on the master cylinder.

(b) Set the SST on the gasket, and lower the pin until its tip slightly touches the piston.
SST 09737–00010

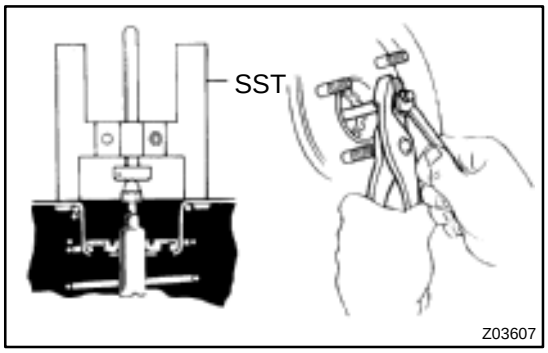

(c) Turn the SST upside down, and set it on the booster.
SST 09737–00010

(d) Measure the clearance between the booster push rod and pin head (SST).
Clearance: 0 mm (0 in.)

(e) Adjust the booster push rod length until the push rod lightly touches the pin head.

3. INSTALL MASTER CYLINDER (See page BR–15)

4. CONNECT VACUUM HOSE TO BRAKE BOOSTER

5. FILL BRAKE RESERVOIR WITH BRAKE FLUID AND BLEED BRAKE SYSTEM (See page BR–4)

6. CHECK FOR FLUID LEAKAGE

7. CHECK AND ADJUST BRAKE PEDAL (See page BR–6)

8. DO OPERATIONAL CHECK (See page BR–16)

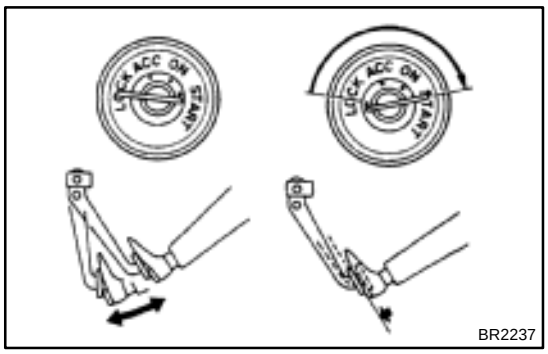

BRAKE BOOSTER ASSEMBLY

BR04Q–01

ON–VEHICLE INSPECTION

1. OPERATING CHECK

(a) Depress the brake pedal several times with the engine off and check that there is no change in the pedal reserve distance.

(b) Depress the brake pedal and start the engine. If the pedal goes down slightly, operation is normal.

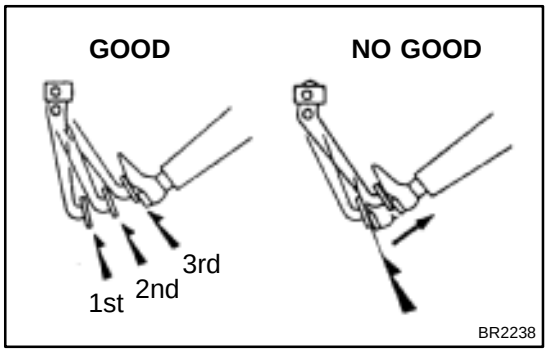

2. AIR TIGHTNESS CHECK

(a) Start the engine and stop it after 1 or 2 minutes. Depress the brake pedal several times slowly.

If the pedal goes down farthest the 1st time, but gradually rises after the 2nd or 3rd time, the booster is air tight.

(b) Depress the brake pedal while the engine is running, and stop the engine with the pedal depressed. If there is no change in the pedal reserve travel after holding the pedal for 30 seconds, the booster is air tight.

BR04S–02

REMOVAL

1. **REMOVE MASTER CYLINDER (See page BR–11)**
2. **DISCONNECT VACUUM HOSE FROM BRAKE BOOSTER**
3. **REMOVE RETURN SPRING**
4. **REMOVE CLIP AND CLEVIS PIN**

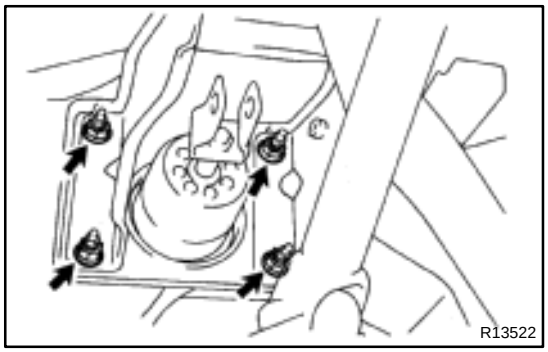

5. **REMOVE BRAKE BOOSTER**

(a) Remove the clevis from the push rod.

(b) Remove the 4 booster installation nuts.

(c) Remove the booster and gasket.

BRAKE FLUID

BR04H–02

BLEEDING

HINT:

If any work is done on the brake system or if air is suspected in the brake lines, bleed the air from the system.

NOTICE:

Do not let brake fluid remain on a painted surface. Wash it off immediately.

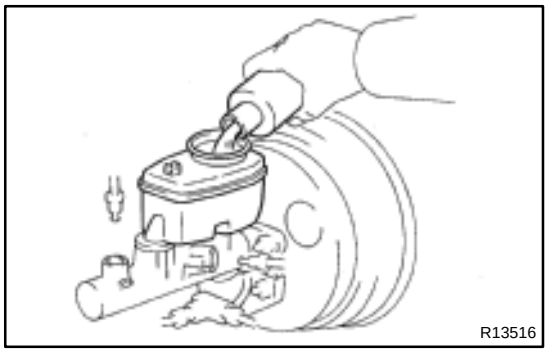

1. FILL BRAKE RESERVOIR WITH BRAKE FLUID

Check the fluid level in the reservoir after bleeding each wheel. Add fluid, if necessary.

Fluid: SAE J1703 or FMVSS No. 116 DOT 3

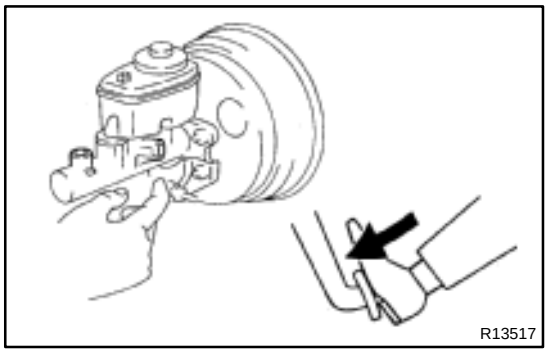

2. BLEED MASTER CYLINDER

HINT:

If the master cylinder has been disassembled or if the reservoir becomes empty, bleed the air from the master cylinder.

(a) Disconnect the brake lines from the master cylinder.

(b) Slowly depress the brake pedal and hold it.

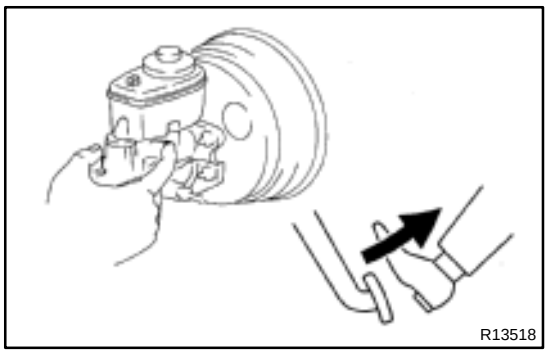

(c) Block off the outlet plug with your finger, and release the brake pedal.

(d) Repeat (b) and (c) 3 or 4 times.

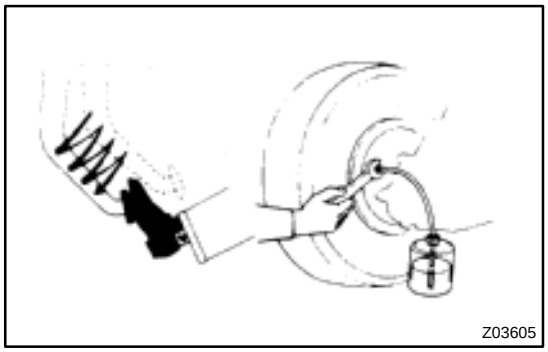

3. CONNECT VINYL TUBE TO BRAKE CALIPER OR WHEEL CYLINDER BLEEDER PLUG

Insert the other end of the tube in a half–full container of brake fluid.

HINT:

Begin air bleeding from the wheel cylinder with the longest hydraulic line.

4. BLEED BRAKE LINE

(a) Slowly depress the brake pedal several times.

(b) While an assistant depresses the pedal, loosen the bleeder plug until fluid starts to run out. Then tighten the bleeder plug.

(c) Repeat this procedure until there are no more air bubbles in the fluid.

Torque: (bleeder plug)
11 N·m (110 kgf·cm, 8 ft·lbf)

5. REPEAT PROCEDURE FOR EACH WHEEL

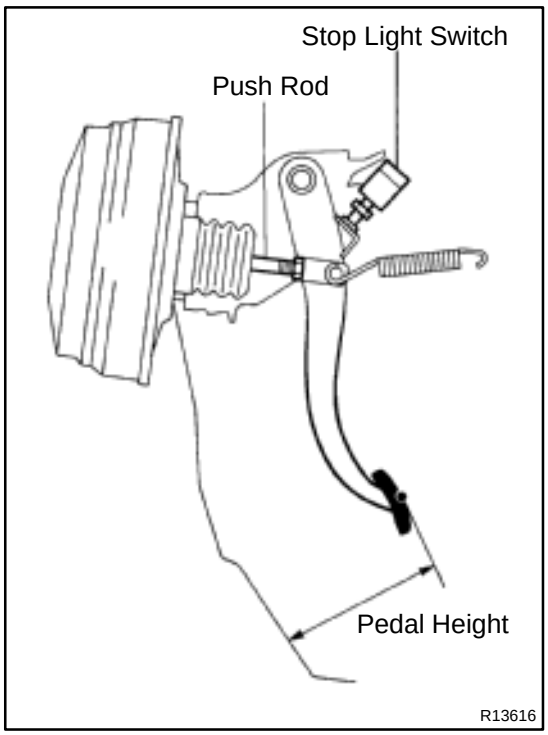

BRAKE PEDAL

BR0YL–01

ON–VEHICLE INSPECTION

1. CHECK PEDAL HEIGHT

Pedal height from asphalt seat:
154.6 – 164.6 mm (6.087 – 6.480 in.)

2. IF NECESSARY, ADJUST PEDAL HEIGHT

(a) Disconnect the connector from the stop light switch.
(b) Loosen the stop light switch lock nut and remove the stop light switch.
(c) Loosen the push rod lock nut.
(d) Adjust the pedal height by turning the pedal push rod.
(e) Tighten the push rod lock nut.
Torque: 25 N·m (260 kgf·cm, 19 ft·lbf)
(f) Install the stop light switch.
(g) Push the brake pedal in 5 – 15 mm (0.20 – 0.59 in.), turn the stop light switch to lock the nut in the position where the stop light goes off.
(h) Push the brake pedal in 5 – 15 mm (0.20 – 0.59 in.), check that stop light lights up.
(i) After adjusting the pedal height, check the pedal freeplay.

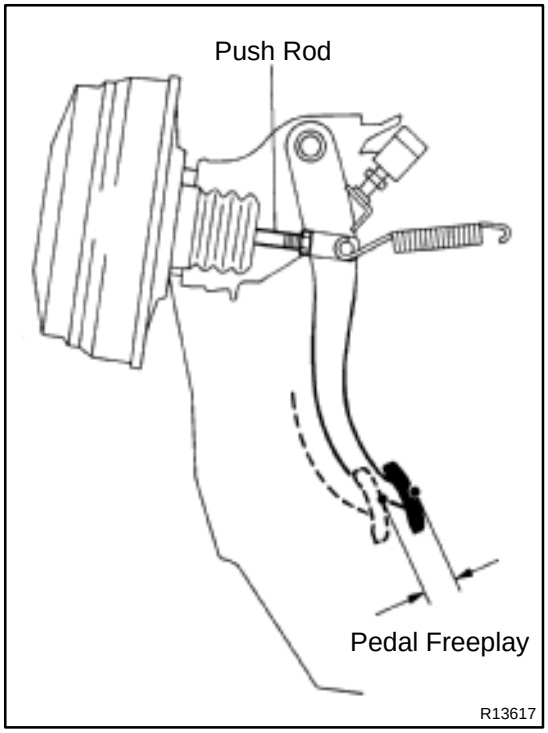

3. CHECK PEDAL FREEPLAY

(a) Stop the engine and depress the brake pedal several times until there is no more vacuum left in the booster.
(b) Push in the pedal by hand until the second resistance begins to be felt. Measure the distance.
Pedal freeplay: 3 – 6 mm (0.12 – 0.24 in.)

HINT:

The freeplay to the 1st resistance is due to the play between the clevis and pin. This is magnified up to 1 – 3 mm (0.04 – 0.12 in.) at the pedal.

If correct, check the stop light switch clearance.

If the clearance is OK, then troubleshoot the brake system.

Stop light switch clearance:
0.5 – 2.4 mm (0.020 – 0.094 in.)

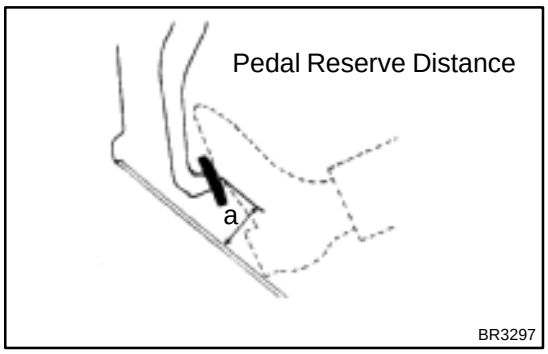

4. CHECK PEDAL RESERVE DISTANCE

Release the parking brake.

With the engine running, depress the pedal and measure the pedal reserve distance, as shown.

Pedal reserve distance, 'a', at 490 N (50 kgf, 110.2 lbf):
More than 72 mm (2.83 in.)

If incorrect, troubleshoot the brake system.

FRONT BRAKE CALIPER (4WD and PRE RUNNER)

BR054–03

COMPONENTS

HINT:

Pre runner is the described below.

RZN191L–TRPDKAB, RZN196L–CRPDKAB, VZN195L–CRPDKAB

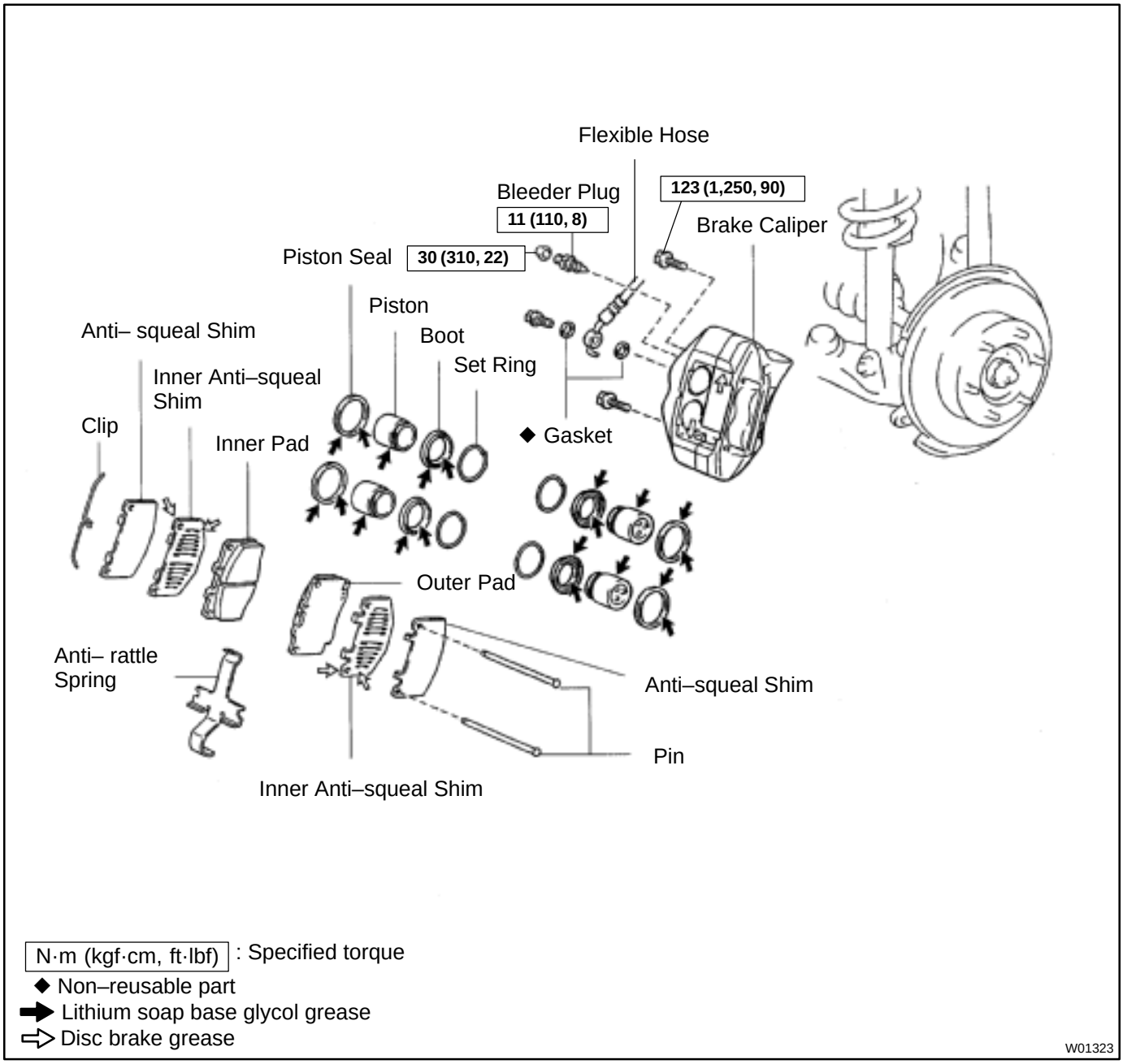

N·m (kgf·cm, ft·lbf) : Specified torque

◆ Non–reusable part

➡ Lithium soap base glycol grease

⇨ Disc brake grease

W01323

BR056–02

DISASSEMBLY

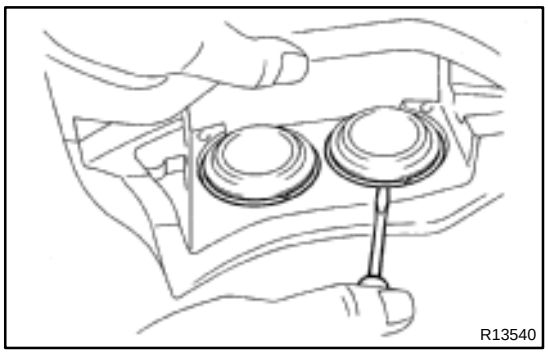

1. REMOVE CYLINDER BOOT SET RINGS AND BOOTS

Using a screwdriver, remove the 4 cylinder boot set rings and boots.

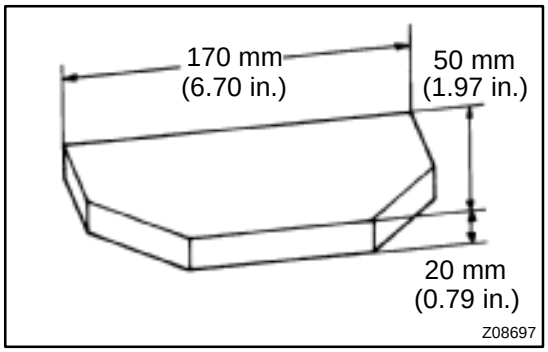

2. REMOVE PISTONS FROM CYLINDER

(a) Prepare the wooden plate to hold the pistons.

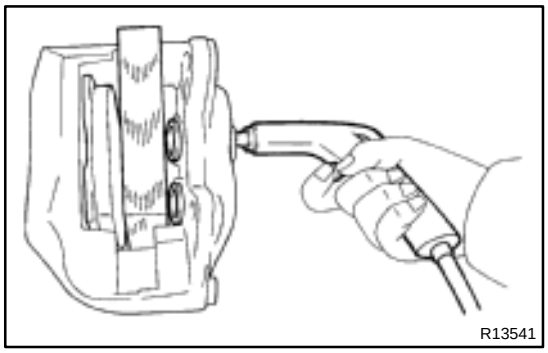

(b) Place the plate between the pistons and insert a pad at one side.

(c) Use compressed air to remove the pistons alternately from the cylinder.

CAUTION:

Do not place your fingers in front of the pistons when using compressed air.

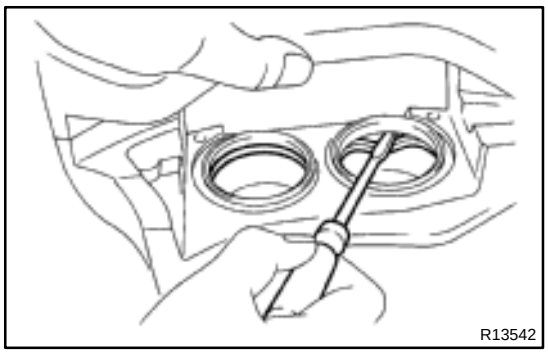

3. REMOVE PISTON SEALS

Using a screwdriver, remove the 4 seals from the cylinder.

BR057–02

INSPECTION

1. MEASURE PAD LINING THICKNESS (See step 1. on page BR–28)
Standard thickness: 11.5 mm (0.453 in.)
Minimum thickness: 1.0 mm (0.039 in.)

2. MEASURE DISC THICKNESS (See step 2. on page BR–28)
Standard thickness: 22.0 mm (0.866 in.)
Minimum thickness: 20.0 mm (0.787 in.)

3. MEASURE DISC RUNOUT

(a) Tighten the disc with the 3 hub nuts.

(b) Using a dial indicator, measure the disc runout at a position 10 mm (0.39 in.) from the outside edge.
Maximum disc runout: 0.07 mm (0.0028 in.)

If the runout is greater than the maximum, replace the disc or grind it on a ”On–Car” brake lathe.

HINT:

Before measuring the runout, confirm that the front bearing play is within the specification.

4. IF NECESSARY, ADJUST DISC RUNOUT

(a) Remove the hub nuts and disc. Reinstall the disc rotating 1/6 of a turn from its original position on the hub. Install and torque the hub nuts. Remeasure the disc runout. Make a note of the runout and the disc’s position on the hub.

(b) Repeat (a) until the disc has been installed on the 4 remaining hub position.

If the minimum runout recorded in (a) and (b) is less than the maximum disc runout, install the disc in that position.

If the minimum runout recorded in (a) and (b) is greater than the maximum disc runout, replace the disc and repeat step 3.

BR059–02

INSTALLATION

Installation is in the reverse order of removal (See page BR–32).

HINT:

After installation, fill the brake reservoir with brake fluid, bleed brake system (See page BR–4) and check for leaks.

BR058–02

REASSEMBLY

Reassembly is in the reverse order of disassembly (See page BR–33).

NOTICE:

Apply lithium soap base glycol grease to the parts indicated by the arrows (See page BR–31).

FRONT BRAKE PAD (4WD and PRE RUNNER)

BR04W–03

COMPONENTS

HINT:

Pre runner is the described below.

RZN191L–TRPDKAB, RZN196L–CRPDKAB, VZN195L–CRPDKAB

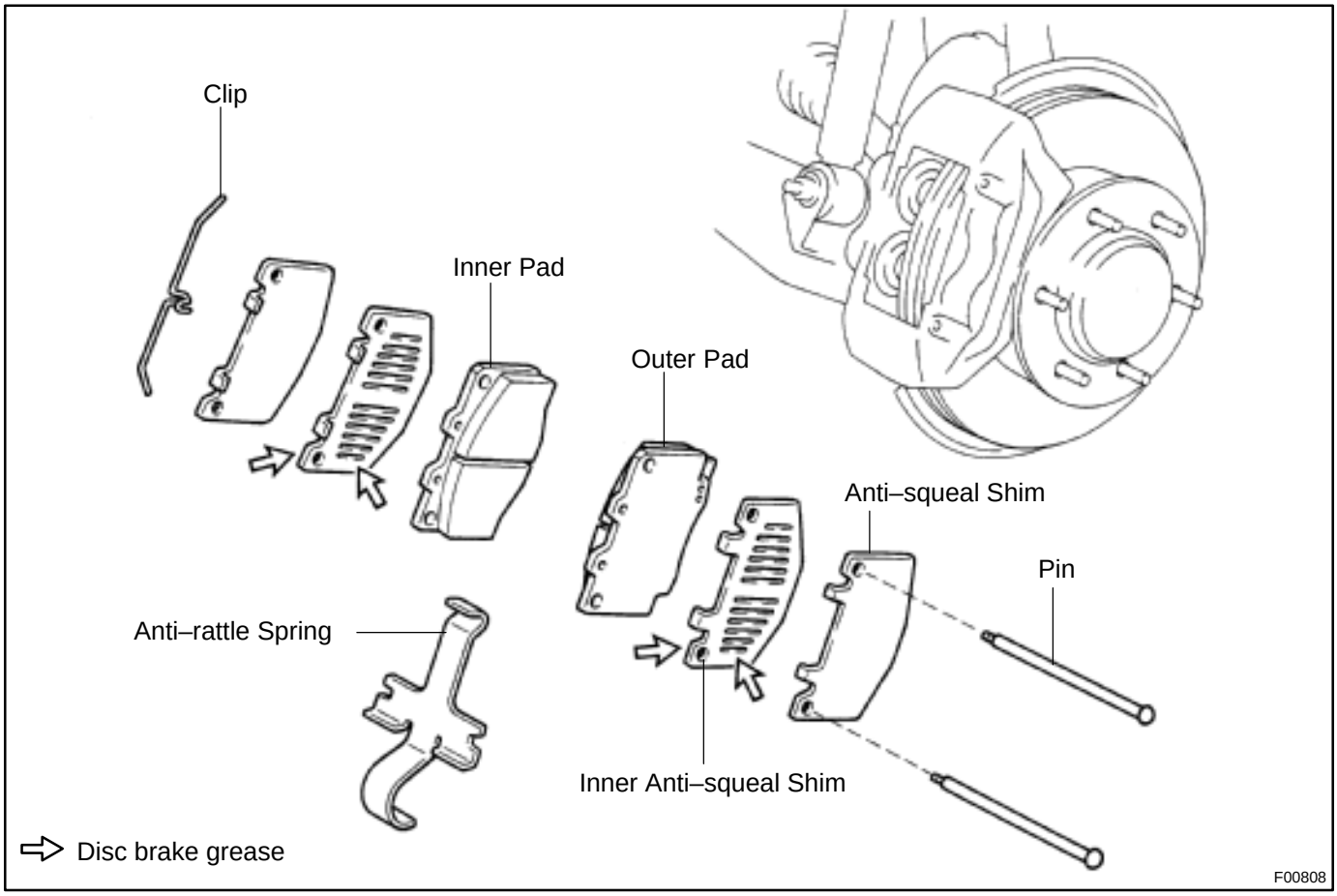

BR04X–02

REPLACEMENT

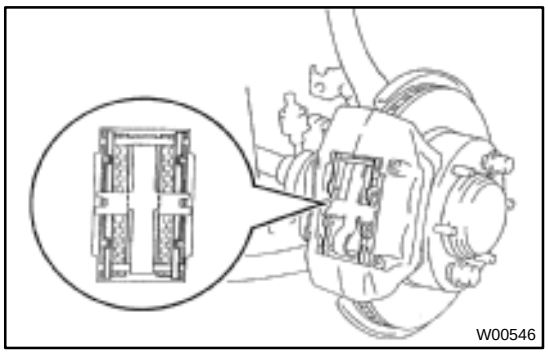
W00546

1. REMOVE FRONT WHEEL

2. INSPECT PAD LINING THICKNESS

Check the pad thickness and replace pads if not within specification.

Minimum thickness: 1.0 mm (0.039 in.)

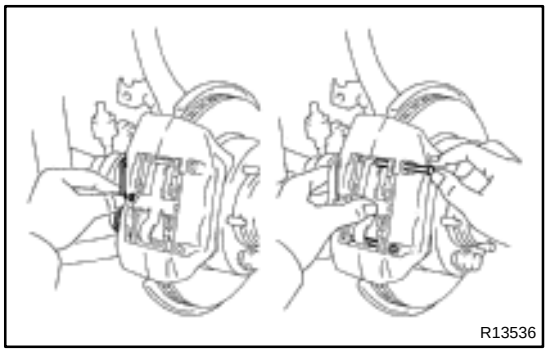
R13536

3. REMOVE CLIP, 2 PINS AND ANTI–RATTLE SPRING

4. REMOVE 2 PADS AND 4 ANTI–SQUEAL SHIMS

NOTICE:

The anti–rattle spring can be used again provided that they have sufficient rebound, no deformation, cracks or wear, and have had all rust, dirt and foreign particles cleaned off.

5. CHECK DISC THICKNESS AND RUNOUT

(See page BR–34)

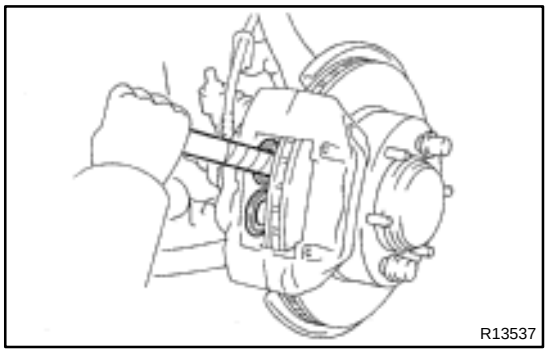
R13537

6. INSTALL NEW PADS

NOTICE:

When replacing worn pads, the anti–squeal shims must be replaced together with the pads.

(a) Draw out a small amount of brake fluid from the reservoir.

(b) Press in the pistons with a monkey wrench handle or equivalent.

HINT:

- Tape the monkey wrench handle before use.
- Always change the pad on one wheel at a time as there is a possibility of the opposite piston flying out.
- If the piston is difficult to push in, loosen the bleeder plug and push in the piston while letting some brake fluid escape.

(c) Install the anti–squeal shims to new pads.

HINT:

Apply disc brake grease to both sides of inner anti–squeal shims (See page BR–31).

(d) Install the 2 pads.

NOTICE:

Do not allow oil or grease to get on the rubbing face.

7. INSTALL ANTI–RATTLE SPRING AND 2 PINS

8. INSTALL CLIP

9. INSTALL FRONT WHEEL

Torque: 103 N·m (1,050 kgf·cm, 76 ft·lbf)

10. DEPRESS BRAKE PEDAL SEVERAL TIMES

11. CHECK THAT FLUID LEVEL IS AT MAX LINE

BR05W–02

INSTALLATION

Installation is in the reverse order of removal (See page BR–63).

NOTICE:

After installation, check the speed sensor signal (See page DI–415).

BR05V–02

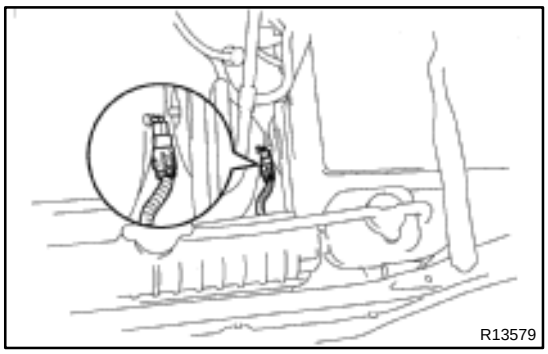

REMOVAL

REMOVE SPEED SENSOR

(a) Disconnect the speed sensor connector.

(b) Remove the 2 (4WD, pre runner) or 4 (2WD) clamp bolts holding the sensor harness from the steering knuckle, upper arm and side rail.

Torque:
Upper arm: 8.0 N·m (82 kgf·cm, 71 in.·lbf)
Side rail: 13 N·m (130 kgf·cm, 9 ft·lbf)

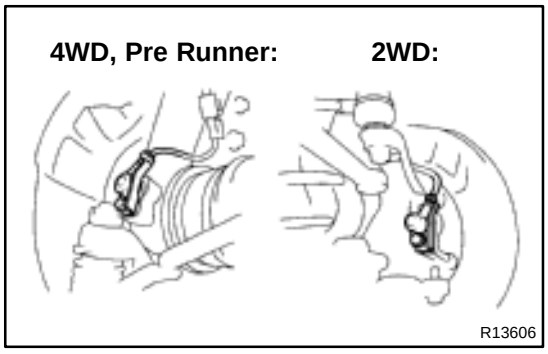

(c) Remove the speed sensor installation bolt from the steering knuckle.

Torque: 8.0 N·m (82 kgf·cm, 71 in.·lbf)

NOTICE:

At the time of installation, please refer to the following items.

- **There are no foreign objects on the sensor or the part of the knuckle to which the sensor is to be installed.**
- **The sensor is installed flat against the knuckle when you tighten the bolt.**
- **When installing the resin clips, use new ones.**

BR05J–03

COMPONENTS

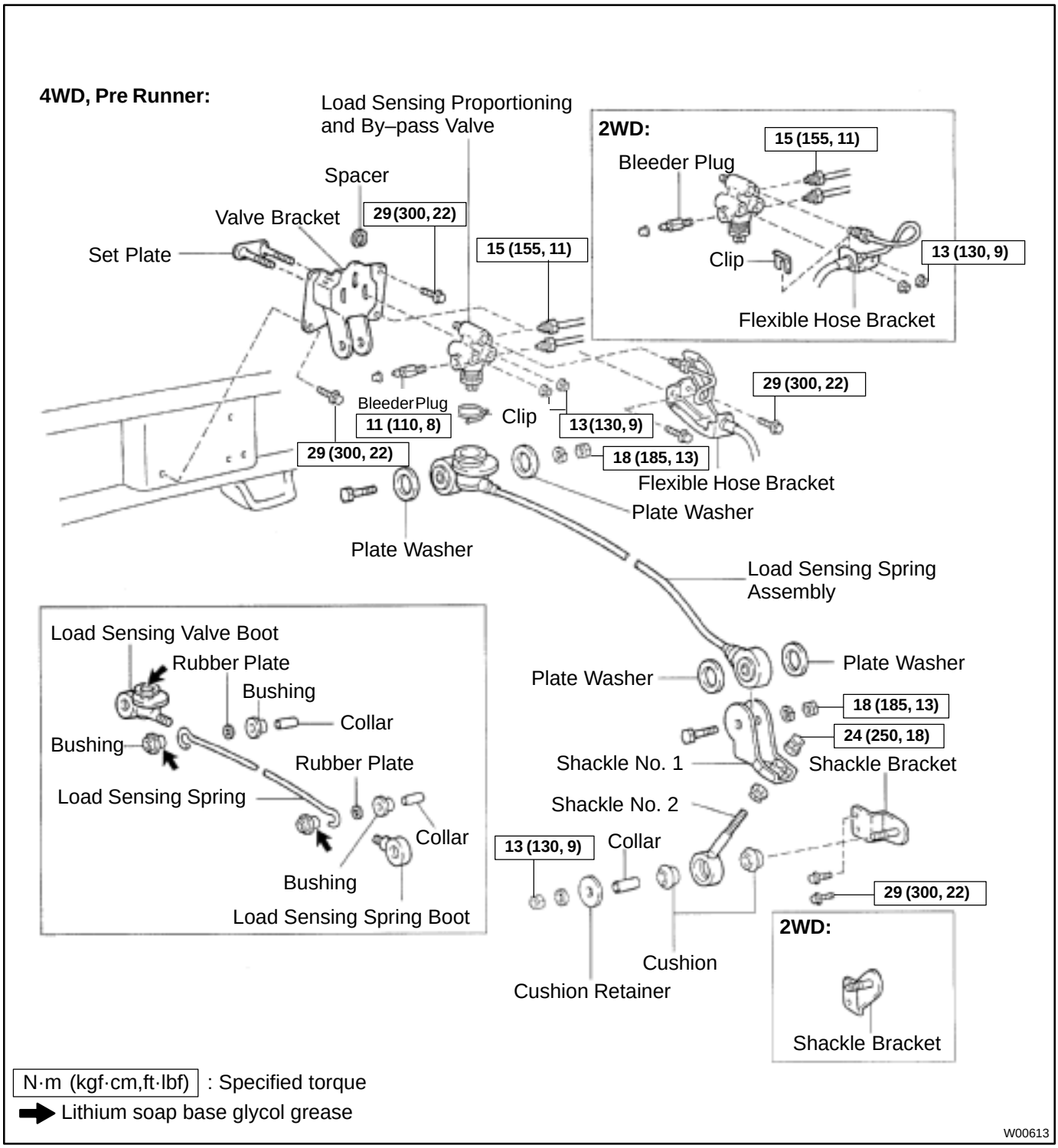

BR05L–03

DISASSEMBLY



1. REMOVE VALVE BRACKET

(a) Remove the nut, bolt and 2 plate washers.

(b) 2WD:
Remove the 2 nuts and flexible hose bracket, and remove the valve bracket and set plate from the valve body.

(c) 4WD and Pre runner:
Remove the 2 nuts, and remove the valve bracket and set plate from the valve body.

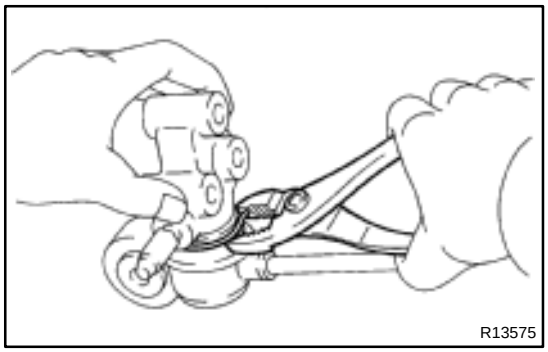

2. DISCONNECT SPRING FROM VALVE

Using pliers, remove the clip, and remove the spring from the valve.

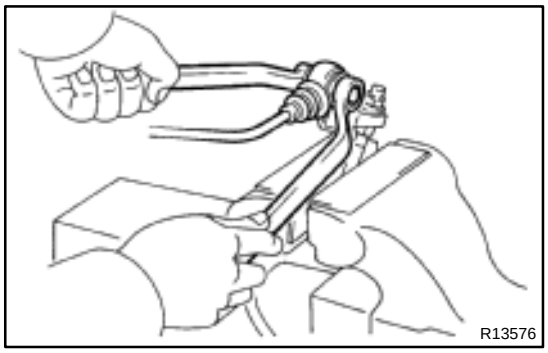

3. REMOVE SHACKLES NO.1 AND NO.2

(a) Remove the nut and bolt, and remove the load sensing spring and 2 plate washers.

(b) Loosen the 2 nuts, and remove the shackle No. 1 from the shackle No. 2.

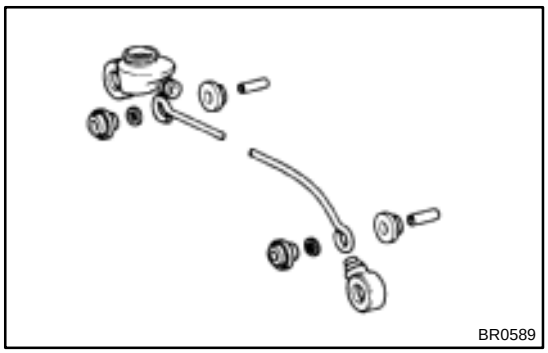

4. DISASSEMBLE LOAD SENSING SPRING

(a) Remove the 4 bushings, 2 collars and 2 rubber plats.

(b) Remove the load sensing valve boot and load sensing spring boot.

BR05M–03

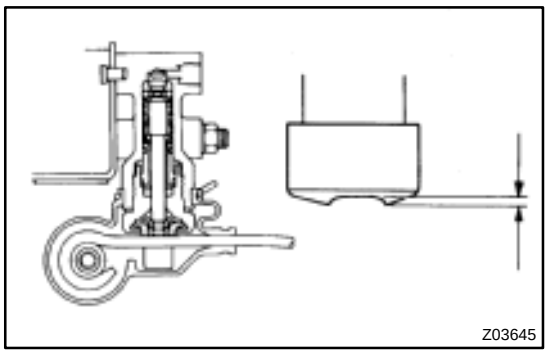

INSPECTION

INSPECT VALVE PISTON PIN AND LOAD SENSING CONTACT SURFACE FOR WEAR

Wear limit: 0.7 mm (0.028 in.)

BR05O–03

INSTALLATION

1. INSTALL LSP & BV ASSEMBLY TO FRAME

(a) 2WD:
Install the 3 valve bracket mounting bolts and spacer with the LSP & BV assembly.

(b) 4WD and Pre runner:
Install the 3 valve bracket mounting bolts, spacer and flexible hose bracket mounting bolt with the LSP & BV assembly and flexible hose bracket.
Torque: 29 N·m (300 kgf·cm, 22 ft·lbf)

2. CONNECT BRAKE LINE

Using SST, connect the brake lines.
Torque: 15 N·m (155 kgf·cm, 11 ft·lbf)
SST 09023–00100

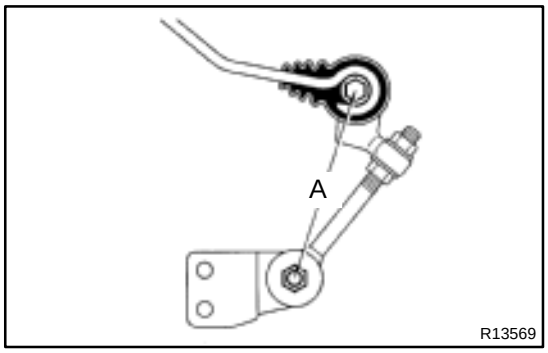

3. CONNECT SHACKLE NO. 2 TO SHACKLE BRACKET

(a) Install teh shackle No. 2 to the shackle No. 1 with the 2 nuts.

(b) Set dimension A.
Initial set:

2WD	78 mm (3.07 in.)
4WD, pre runner	120 mm (4.72 in.)

(c) Tighten the lock nut.
Torque: 24 N·m (250 kgf·cm, 18 ft·lbf)

(d) Install the shackle No. 2 with the 2 cushions and collar to the shackle bracket.

(e) Install the nut to fix the cushion retainer.
Torque: 13 N·m (130 kgf·cm, 9 ft·lbf)

4. SET REAR AXLE LOAD (See page BR–48)

5. SET VALVE BODY

(a) When pulling down the load sensing spring, confirm that the valve piston moves down smoothly.

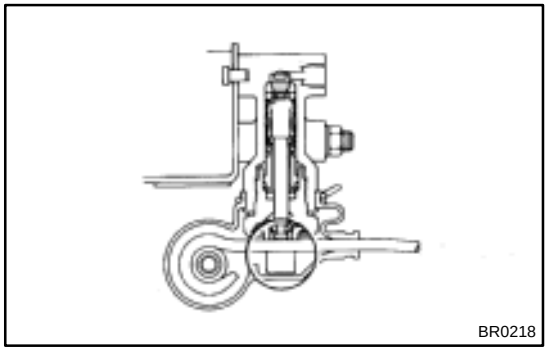

(b) Position the valve body so that the valve piston lightly contacts the load sensing spring.

(c) Tighten the valve body mounting nuts.
Torque: 13 N·m (130 kgf·cm, 9 ft·lbf)

6. BLEED BRAKE LINE (See page BR–4)

7. CHECK AND ADJUST LSP & BV FLUID PRESSURE (See page BR–48)

LOAD SENSING PROPORTIONING AND BY–PASS VALVE (LSP & BV)

BR05I–03

ON–VEHICLE INSPECTION

HINT:

Pre runner is the described below.

RZN191L–TRPDKAB, RZN196L–CRPDKAB, VZN195L–CRPDKAB

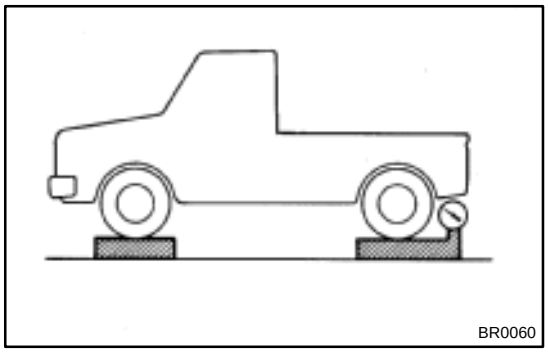

BR0060

1. SET REAR AXLE LOAD

Rear axle load (includes vehicle weight):

2WD	700 kg (1,543 lb)
4WD, pre runner	850 kg (1,874 lb)

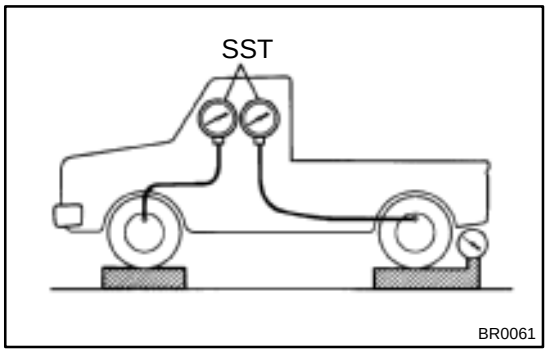

BR0061

2. INSTALL LSP & BV GAUGE (SST) AND BLEED AIR

SST 09709–29018

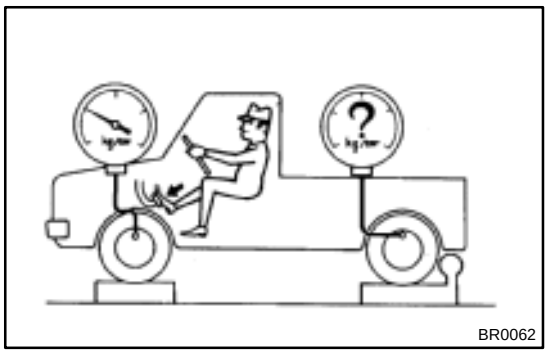

BR0062

3. RAISE FRONT BRAKE PRESSURE TO 7,845 kPa (80 kgf/cm^2, 1,138 psi) AND CHECK REAR BRAKE PRESSURE

Rear brake pressure:

2WD	4,913 ± 490 kPa (50.1 ± 5 kgf/cm^2, 713 ± 71 psi)
4WD, pre runner	4,383 ± 490 kPa (44.7 ± 5 kgf/cm^2, 636 ± 71 psi)

HINT:

The brake pedal should not be depressed twice and/or returned while setting to the specified pressure. Read the value of rear brake pressure 2 seconds after adjusting the specified fluid pressure. If the brake pressure is incorrect, adjust the fluid pressure.

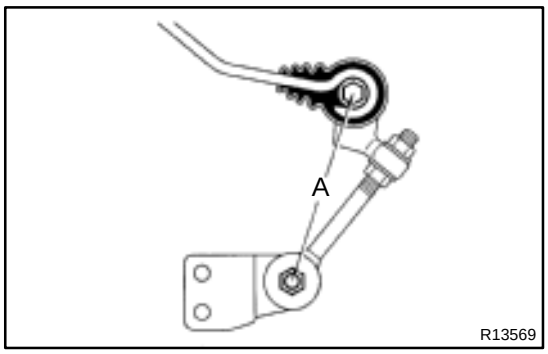

4. IF NECESSARY, ADJUST FLUID PRESSURE

(a) Adjust the length of the No. 2 shackle.
Low pressure – Lengthen A
High pressure – Shorten A

Initial set:

2WD	78 mm (3.07 in.)
4WD, pre runner	120 mm (4.72 in.)

Adjustment range:

2WD	72 – 84 mm (2.83 – 3.31 in.)
4WD, pre runner	114 – 126 mm (4.49 – 4.96 in.)

HINT:
One turn of the nut changes the fluid pressure as shown in the following table.

Rear brake pressure:

2WD	55 kPa (0.56 kgf/cm^2, 8.0 psi)
4WD, pre runner	52 kPa (0.53 kgf/cm^2, 7.5 psi)

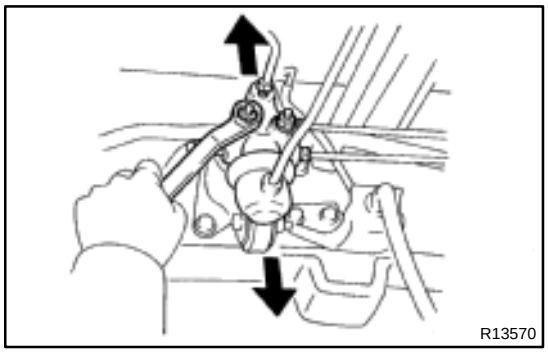

(b) If the pressure cannot be adjusted by the No. 2 shackle, raise or lower the valve body.
Low pressure – Lower body
High pressure – Raise body

(c) Torque the nuts.
Torque: 13 N·m (130 kgf·cm, 9 ft·lbf)

(d) Adjust the length of the No. 1 shackle again.

If it cannot be adjusted, inspect the valve housing.

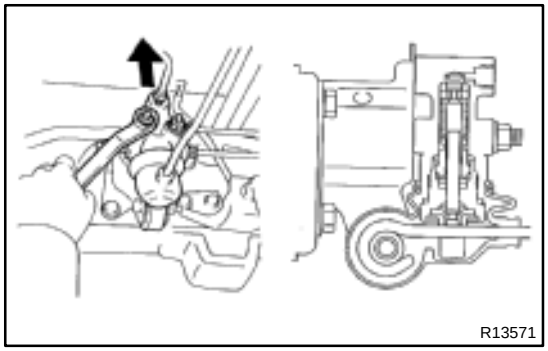

5. IF NECESSARY, CHECK VALVE BODY

(a) Assemble the valve body in the uppermost position.

HINT:
When the brakes are applied, the position will move down about 0.8 mm (0.03 in.). Even at this time, the piston should not make contact with or move the load sensing spring.

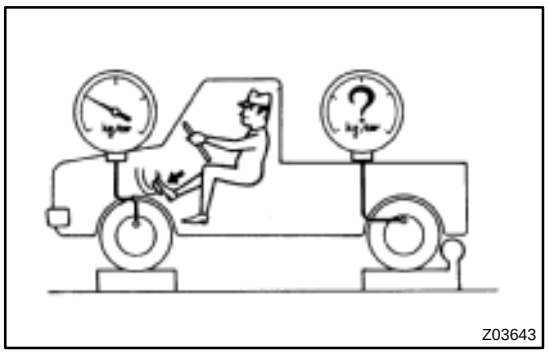

(b) In this position, check the rear brake pressure.

2WD:

Front brake pressure kPa (kgf/cm^2, psi)	Rear brake pressure kPa (kgf/cm^2, psi)
1,960 (20, 285)	1,960 (20, 285)
3,920 (40, 570)	2,450 ± 196 (25 ± 2.0, 356 ± 28.5)
6,860 (70, 997.5)	3,190 ± 343 (32.5 ± 3.5, 463 ± 50)

4WD and pre runner:

Front brake pressure kPa (kgf/cm^2, psi)	Rear brake pressure kPa (kgf/cm^2, psi)
1,470 (15, 213.5)	1,470 (15, 213.5)
3,920 (40, 570)	1,960 ± 196 (20 ± 2.0, 285 ± 28.5)
6,860 (70, 997.5)	2,550 ± 343 (26 ± 3.5, 370.5± 50)

If the measured value is not within the standard, replace the valve body.

BR05N–03

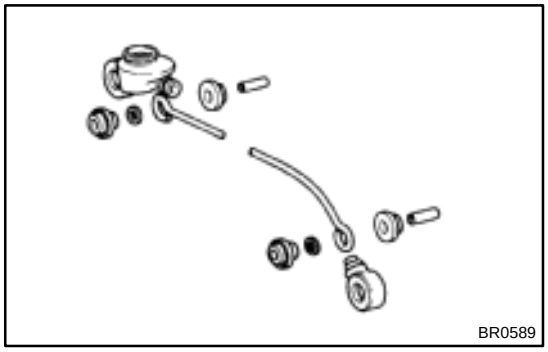
BR0589

REASSEMBLY

1. ASSEMBLE LOAD SENSING SPRING

(a) Install the load sensing valve boot and load sensing spring boot.

(b) Install the 2 rubber plates, 2 collars and 4 bushings.

HINT:

- Apply lithium soap–base glycol grease to all rubbing areas.

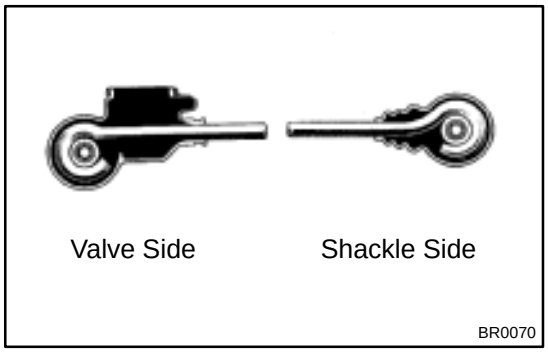

BR0070

- Do not mistake the valve side for the shackle side of the load sensing spring.

2. INSTALL SHACKLE NO. 1 AND NO. 2

(a) Install the lock nut and shackle No. 1 to the shackle No. 2.

(b) Torque the nut.

Torque: 24 N·m (250 kgf·cm, 18 ft·lbf)

3. INSTALL LOAD SENSING SPRING TO SHACKLE NO. 1

(a) Install the load sensing spring and 2 plate washers to the shackle No. 1.

(b) Install the bolt and nut.

Torque: 18 N·m (185 kgf·cm, 13 ft·lbf)

4. INSTALL LOAD SENSING SPRING TO VALVE BODY

Install the load sensing spring to the load sensing valve with the clip.

5. INSTALL VALVE BRACKET

(a) 2WD:

Install the set plate to the valve assembly through the valve bracket and temporarily tighten the 2 valve body mounting nuts with flexible hose bracket.

(b) 4WD and Pre runner:

Install the set plate to the valve assembly through the valve bracket and temporarily tighten the 2 valve body mounting nuts.

(c) Install the bolt and nut with the 2 plate washers.

Torque: 18 N·m (185 kgf·cm, 13 ft·lbf)

BR05K–03

REMOVAL

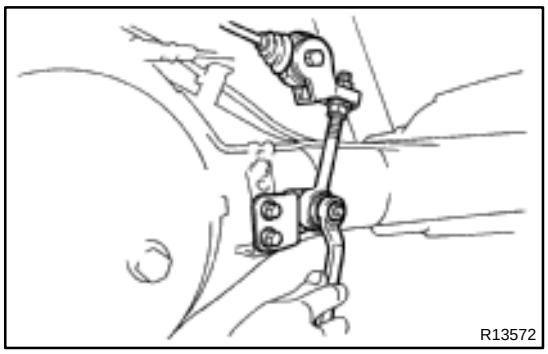

1. DISCONNECT SHACKLE NO. 2 FROM BRACKET

(a) Remove the nut and disconnect the shackle No. 2.

(b) Remove the cushion retainer, 2 cushions and collar.

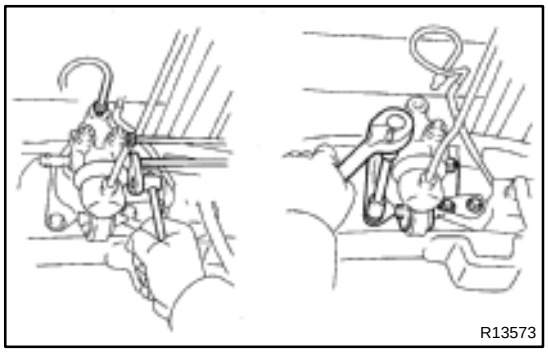

2. REMOVE LSP & BV ASSEMBLY

(a) Using SST, disconnect the brake lines from the valve body.

SST 09023–00100

(b) Remove the clip from the flexible hose bracket.

(c) 2WD:

Remove the 3 valve bracket mounting bolts and spacer, and remove the LSP & BV assembly.

(d) 4WD and Pre runner:

Remove the 3 valve bracket mounting bolts, spacer and flexible hose bracket mounting bolt, and remove the LSP & BV assembly and flexible hose bracket.

BRAKE MASTER CYLINDER

BR04K–02

COMPONENTS

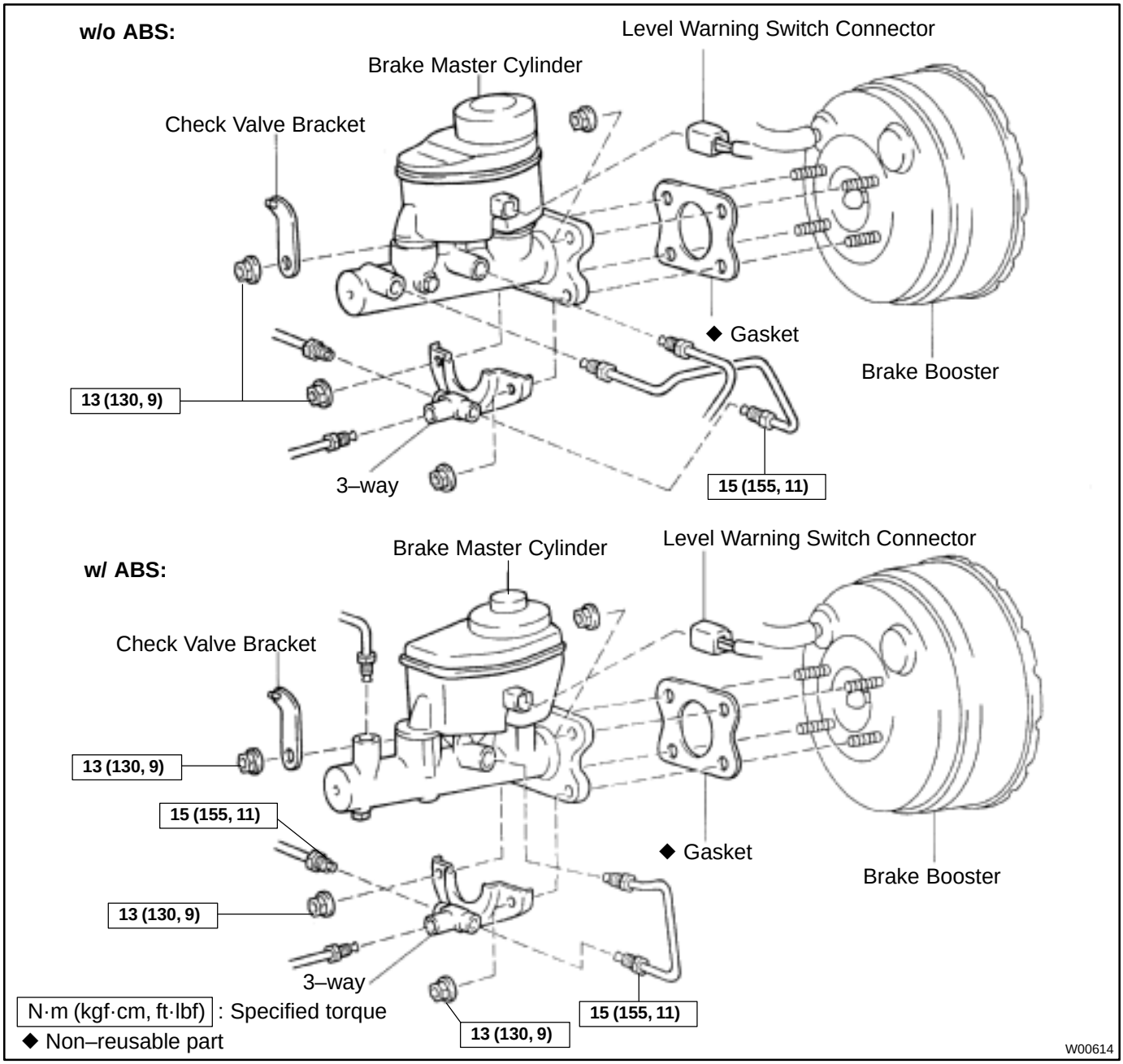

w/o ABS:

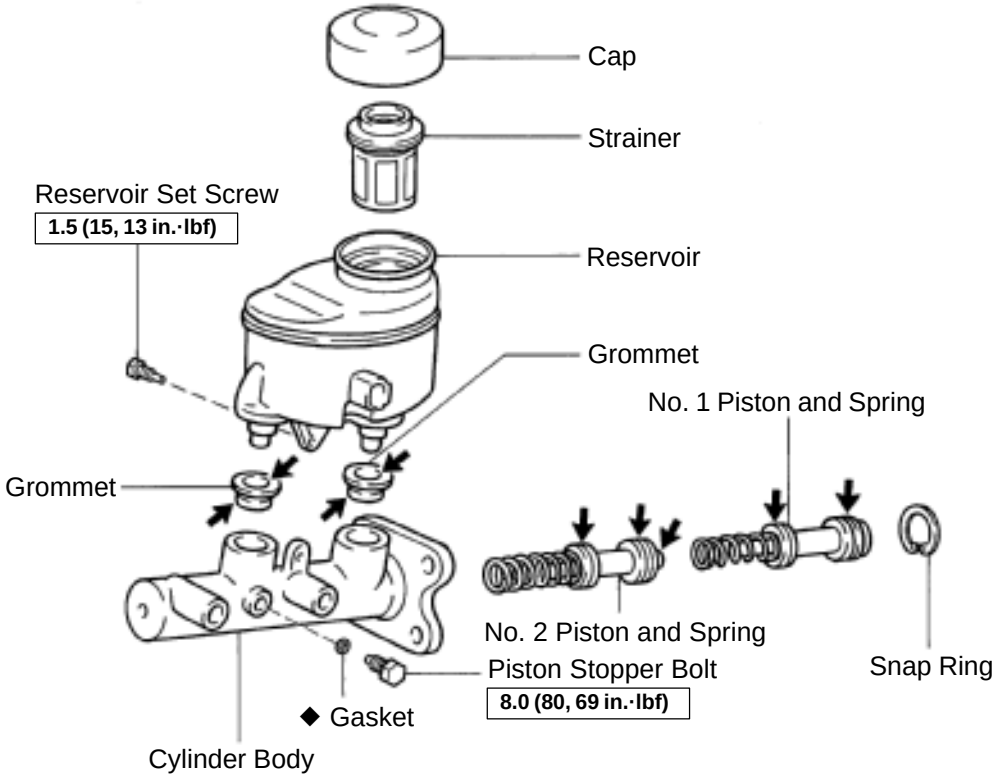

w/ ABS:

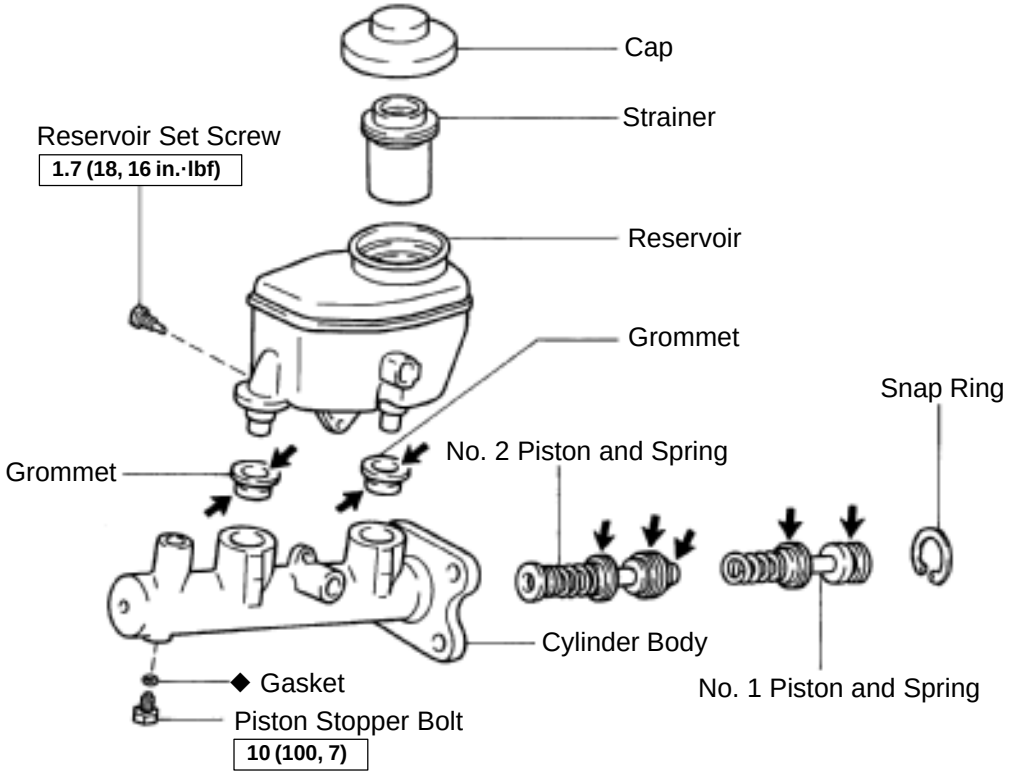

N·m (kgf·cm, ft·lbf) : Specified torque

◆ Non–reusable part

➡ Lithium soap base glycol grease

R13635

BR04M–02

DISASSEMBLY

1. REMOVE RESERVOIR

(a) Remove the set screw and pull out the reservoir.

Torque:
w/o ABS: 1.5 N·m (15 kgf·cm, 13 in.·lbf)
w/ ABS: 1.7 N·m (18 kgf·cm, 16 in.·lbf)

(b) Remove the cap and strainer from the reservoir.

2. REMOVE 2 GROMMETS

3. PLACE CYLINDER IN VISE

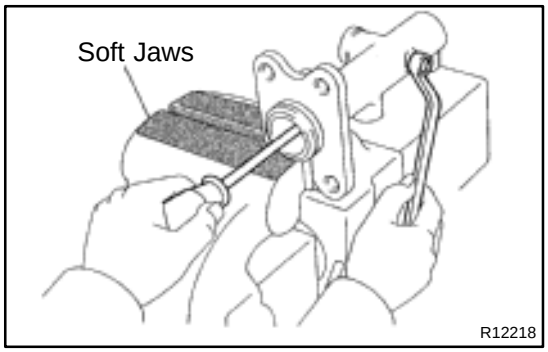

4. REMOVE PISTON STOPPER BOLT

Using a screwdriver, push the pistons in all the way and remove the piston stopper bolt and gasket.

HINT:

Tape the screwdriver tip before use.

Torque:
w/o ABS: 8.0 N·m (80 kgf·cm, 69 in.·lbf)
w/ ABS: 10 N·m (100 kgf·cm, 7 ft·lbf)

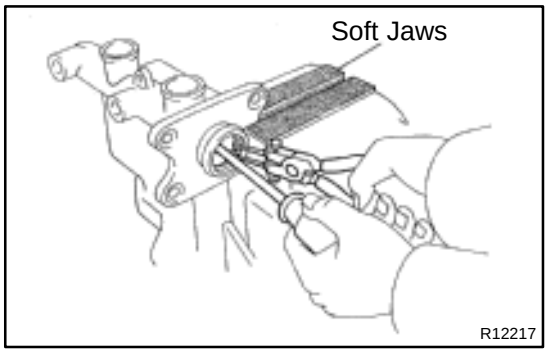

5. REMOVE 2 PISTONS AND SPRINGS

(a) Push in the piston with a screwdriver and remove the snap ring with snap ring pliers.

HINT:

Tape the screwdriver tip before use.

(b) Remove the No. 1 piston and spring by hand, pulling straight out, not at an angle.

NOTICE:

- **If pulled out and installed at an angle, there is a possibly that the cylinder bore could be damaged.**
- **At the time of disassembly, be careful not to damage the rubber lips on the pistons.**

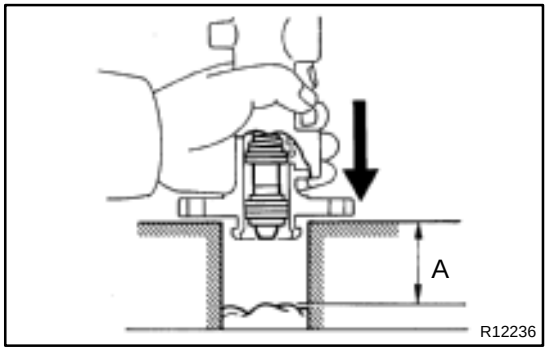

(c) Place a rag and 2 wooden blocks on the work table, and lightly tap the cylinder flange against the block edges until the No. 2 piston and spring drops out of the cylinder.

HINT:

Make sure the distance (A) from the rag to the top of the blocks is at least 100 mm (3.94 in.).

BR04N–01

INSPECTION

HINT:

Clean the disassembled parts with compressed air.

1. INSPECT CYLINDER BORE FOR RUST OR SCORING

2. INSPECT CYLINDER FOR WEAR OR DAMAGE

If necessary, clean or replace the cylinder.

BR04P–02

INSTALLATION

HINT:

- Before installation, adjust the length of the brake booster push rod (See page BR–11).
- After installation, fill the brake reservoir with brake fluid, bleed brake system (See page BR–4) and check for leaks.
- Check and adjust the brake pedal (See page BR–6).

BR04O–01

REASSEMBLY

Reassembly is in the reverse order of disassembly (See page BR–12).

NOTICE:

Apply lithium soap base glycol grease to the rubber parts indicated by the arrows (See page BR–9).

BR04L–01

REMOVAL

1. DISCONNECT LEVEL WARNING SWITCH CONNECTOR

2. TAKE OUT FLUID WITH SYRINGE

NOTICE:

Do not let brake fluid remain on a painted surface. Wash it off immediately.

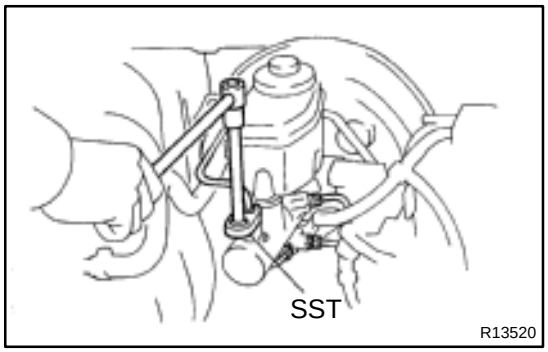

3. DISCONNECT BRAKE LINES

Using SST, disconnect the 5 brake lines.

SST 09023–00100

Torque: 15 N·m (155 kgf·cm, 11 ft·lbf)

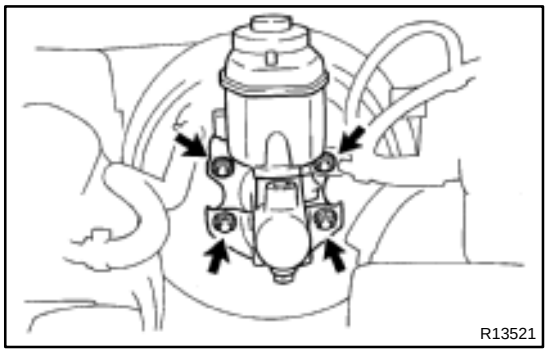

4. REMOVE MASTER CYLINDER

(a) Remove the 4 nuts, 3–way and check valve bracket.

Torque: 13 N·m (130 kgf·cm, 9 ft·lbf)

(b) Pull out the master cylinder and gasket.

PARKING BRAKE LEVER

BR04J–02

ON–VEHICLE INSPECTION

HINT:

Pre runner is the described below.

RZN191L–TRPDKAB, RZN196L–CRPDKAB, VZN195L–CRPDKAB

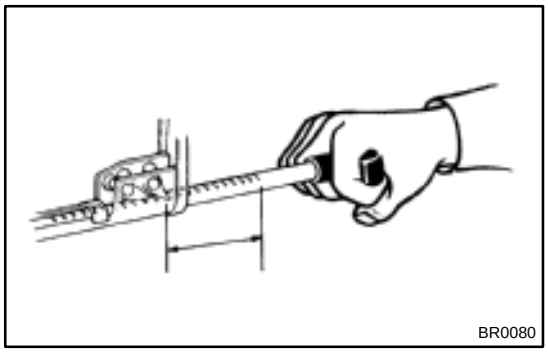

BR0080

1. CHECK PARKING BRAKE LEVER TRAVEL

Pull the parking brake lever all the way up, and count the number of clicks.

Parking brake lever travel at 196 N (20 kgf, 44.1 lbf): 12 – 18 clicks

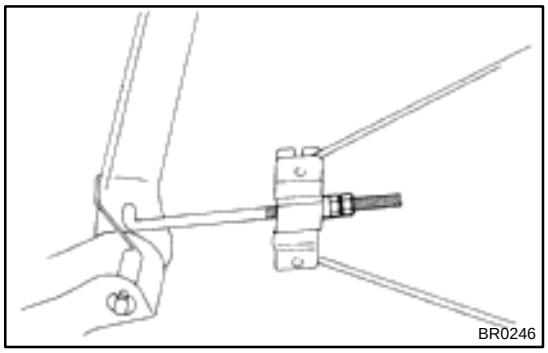

BR0246

2. 2WD:
IF NECESSARY, ADJUST PARKING BRAKE

HINT:

Before adjusting the parking brake, make sure that the rear brake shoe clearance has been adjusted.

(a) Loosen the lock nut.

(b) Tighten the adjusting nut until the travel is correct. Then tighten the lock nut.

(c) After adjusting the parking brake, confirm that the rear brakes are not dragging.

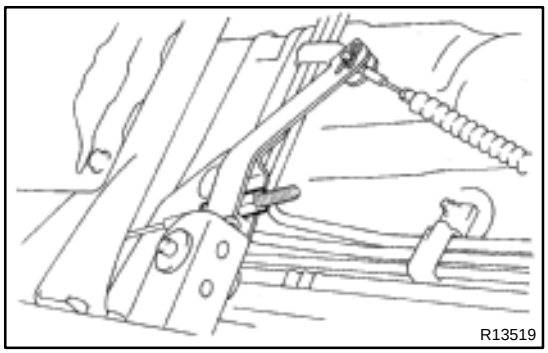

R13519

3. 4WD and pre runner:
IF NECESSARY, ADJUST PARKING BRAKE

HINT:

Before adjusting the parking brake, make sure that the rear brake shoe clearance has been adjusted.

(a) Tighten 1 of the adjusting nuts of the intermediate lever while loosening the other one until the travel is correct. Tighten the 2 adjusting nuts.

(b) After adjusting the parking brake, confirm that the bell-crank stopper screw comes into contact with the backing plate.

BRAKE SYSTEM

BR04F–01

PRECAUTION

- **Care must be taken to replace each part properly as it could affect the performance of the brake system and result in a driving hazard. Replace the parts with parts of the same part number or equivalent.**
- **It is very important to keep parts and the area clean when repairing the brake system.**
- **If the vehicle is equipped with a mobile communication system, refer to the precaution in the IN section.**

TROUBLESHOOTING

PROBLEM SYMPTOMS TABLE

BR04G–02

Use the table below to help you find the cause of the problem. The numbers indicate the priority of the likely cause of the problem. Check each part in order. If necessary, replace these parts.

Symptom	Suspect Area	See page
Low pedal or spongy pedal	4. Fluid leaks for brake system	DI–453
	5. Air in brake system	BR–4
	6. Piston seals (Worn or damaged)	BR–25 BR–31
	7. Rear brake shoe clearance (Out of adjustment)	BR–41 BR–47
	8. Master cylinder (Faulty)	BR–9
	9. Booster push rod (Out of adjustment)	BR–19
Brake drag	1. Brake pedal freeplay (Minimum)	BR–6
	2. Parking brake lever travel (Out of adjustment)	BR–8
	3. Parking brake wire (Sticking)	–
	4. Rear brake shoe clearance (Out of adjustment)	BR–41 BR–47
	5. Pad or lining (Cracked or distorted)	BR–20 BR–23 BR–38 BR–42
	6. Piston (Stuck)	BR–25 BR–31 BR–37 BR–42
	7. Piston (Frozen)	BR–25 BR–31 BR–37 BR–42
	8. Anchor or return spring (Faulty)	BR–37 BR–42
	9. Booster push rod (Out of adjustment)	BR–19
	10. Booster system (Vacuum leaks)	BR–16
	11. Master cylinder (Faulty)	BR–9
Brake pull	1. Piston (Stuck)	BR–25 BR–31 BR–37 BR–42
	2. Pad or lining (Oily)	BR–20 BR–23 BR–38 BR–42
	3. Piston (Frozen)	BR–25 BR–31 BR–37 BR–42
	4. Disc (Scored)	BR–28 BR–34
	5. Pad or lining (Cracked or distorted)	BR–20 BR–23 BR–38 BR–42

Hard pedal but brake inefficient	1. Fluid leaks for brake system	DI–453
	2. Air in brake system	BR–4
	3. Pad or lining (Worn)	BR–20 BR–23 BR–37 BR–42
	4. Pad or lining (Cracked or distorted)	BR–20 BR–23 BR–37 BR–42
	5. Rear brake shoe clearance (Out of adjustment)	BR–41 BR–47
	6. Pad or lining (Oily)	BR–20 BR–23 BR–37 BR–42
	7. Pad or lining (Glazed)	BR–20 BR–23 BR–37 BR–42
	8. Disc (Scored)	BR–28 BR–34
	9. Booster push rod (Out of adjustment)	BR–19
	10. Booster system (Vacuum leaks)	BR–16
Noise from brakes	1. Pad or lining (Cracked or distorted)	BR–20 BR–23 BR–37 BR–42
	2. Installation bolt (Loose)	BR–25 BR–31
	3. Disc (Scored)	BR–28 BR–34
	4. Pad support plate (Loose)	BR–20
	5. Sliding pin (Worn)	BR–25
	6. Pad or lining (Dirty)	BR–20 BR–23 BR–37 BR–42
	7. Pad or lining (Glazed)	BR–20 BR–23 BR–37 BR–42
	8. Anchor or return spring (Faulty)	BR–37 BR–42
	9. Anti–squeal shim (Damaged)	BR–20 BR–23
	10. Shoe hold–down spring (Damaged)	BR–37 BR–42

REAR DRUM BRAKE (4WD and PRE RUNNER)

BR05E–03

COMPONENTS

HINT:

Pre runner is the described below.

RZN191L–TRPDKAB, RZN196L–CRPDKAB, VZN195L–CRPDKAB

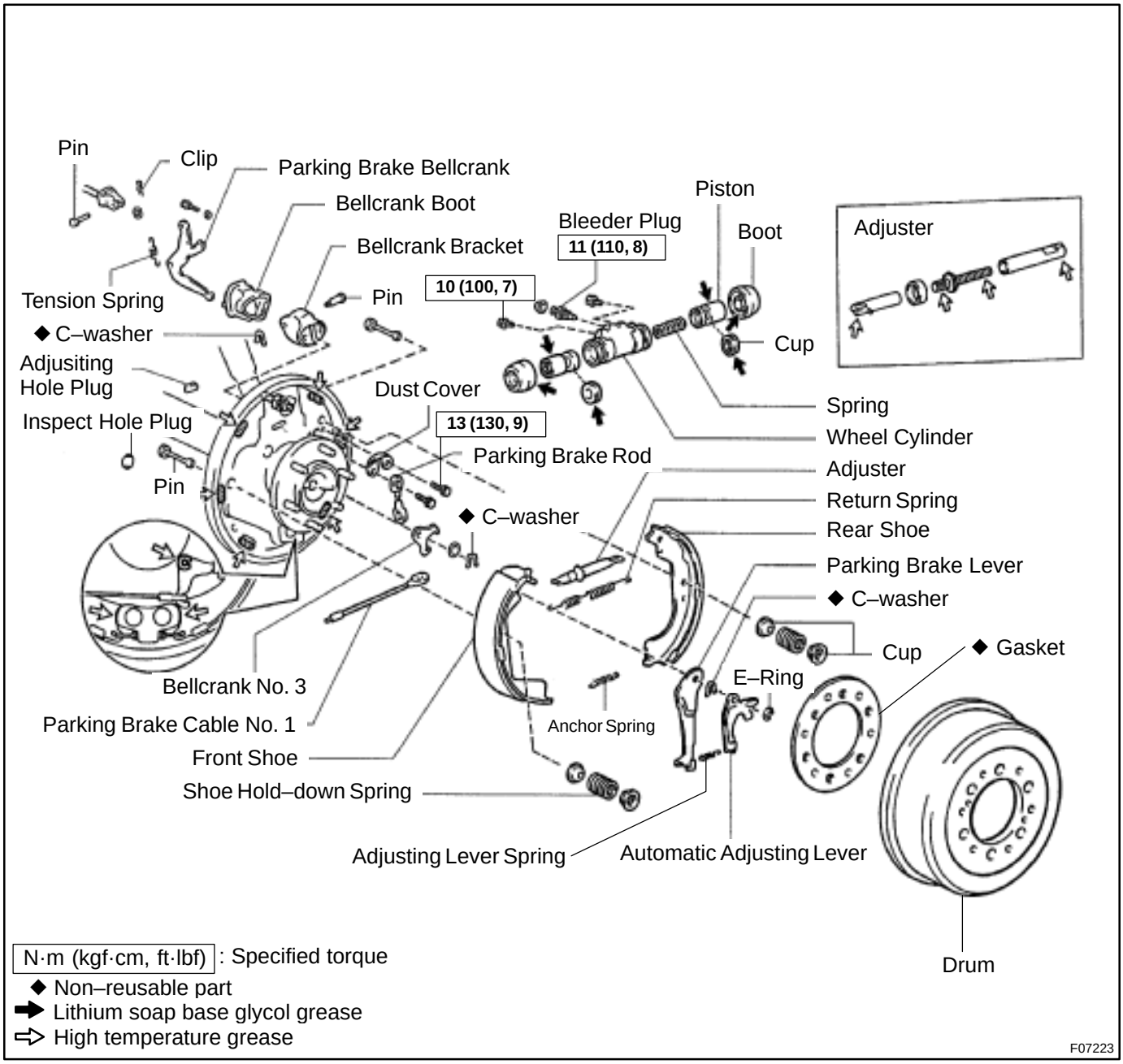

BR05G–02

INSPECTION

1. INSPECT DISASSEMBLED PARTS

Inspect the disassembled parts for wear, rust or damage.

2. MEASURE BRAKE DRUM INSIDE DIAMETER (See step 2. on page BR–40)

Standard inside diameter: 295.0 mm (11.614 in.)

Maximum inside diameter: 297.0 mm (11.693 in.)

3. MEASURE BRAKE SHOE LINING THICKNESS (See step 3. on page BR–40)

Standard thickness: 6.0 mm (0.236 in.)

Minimum thickness: 1.0 mm (0.039 in.)

4. INSPECT REAR BRAKE LINING AND DRUM FOR PROPER CONTACT (See step 4. on page BR–40)

BR05H–02

INSTALLATION

Installation is in the reverse order of removal (See page BR–43).

NOTICE:

Apply lithium soap base glycol grease and high temperature grease to the parts indicated by the arrows (See page BR–42).

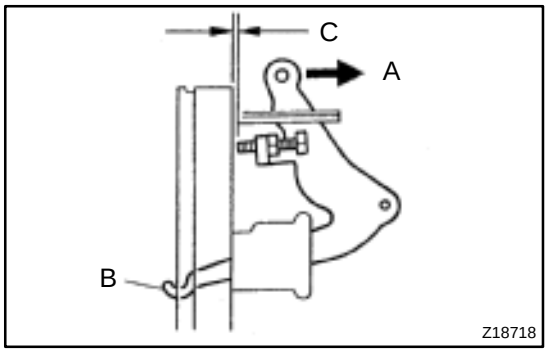

1. ADJUST BELLCRANK

(a) Lightly pull the bellcrank in direction A until there is no slack at part B.

(b) In this condition, turn the adjusting bolt so that dimension C will be 0.4 – 0.8 mm (0.016 – 0.031 in.).

(c) Lock the adjusting bolt with the lock nut.

(d) Connect the parking brake cable to the parking brake bellcrank and install the clip.

(e) Install the tension spring.

2. CHECK OPERATION OF AUTOMATIC ADJUSTING MECHANISM (See step 1. on page BR–41)

3. CHECK CLEARANCE BETWEEN BRAKE SHOES AND DRUM (See step 2. on page BR–41)

Shoe clearance: 0.6 mm (0.024 in.)

4. FILL BRAKE RESERVOIR WITH BRAKE FLUID

5. BLEED BRAKE SYSTEM (See page BR–4)

6. CHECK FOR LEAKS

BR05F–02

REMOVAL

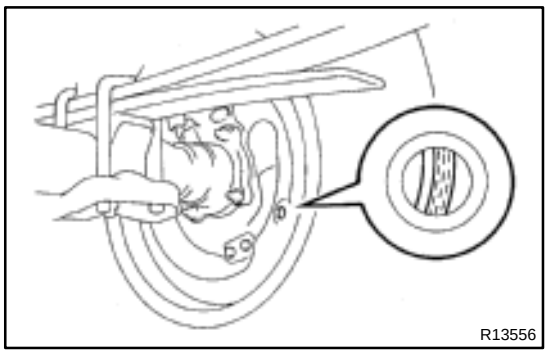

1. INSPECT SHOE LINING THICKNESS

Remove the inspection hole plug, and check the shoe lining thickness through the hole.

If less than minimum, replace the shoes.

Minimum thickness: 1.0 mm (0.039 in.)

2. REMOVE REAR WHEEL

Torque: 103 N·m (1,050 kgf·cm, 76 ft·lbf)

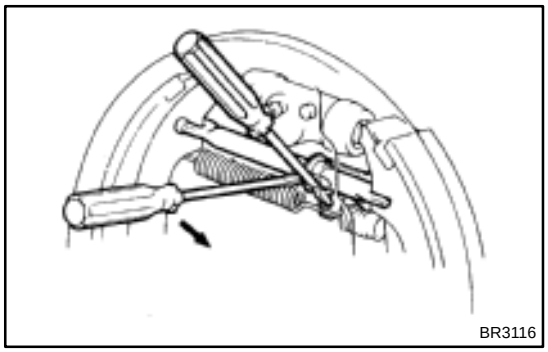

3. REMOVE BRAKE DRUM

(a) Release the parking brake lever and remove the brake drum.

HINT:

If the brake drum cannot be removed easily, do the following steps.

(b) Remove the adjusting hole plug from the backing plate.

(c) Insert a screwdriver through the hole in the backing plate, and hold the automatic adjusting lever away from the adjusting bolt.

(d) Using another screwdriver, reduce the brake shoe adjustment by turning the adjusting bolt.

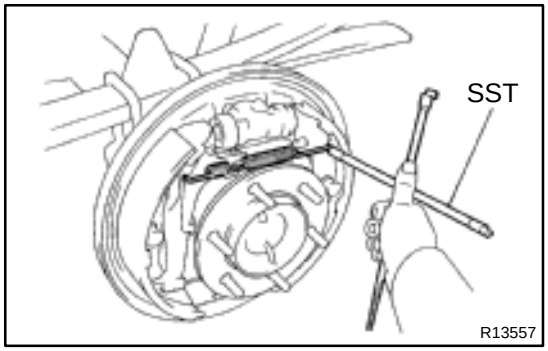

4. REMOVE REAR SHOE

(a) Using SST, disconnect the return spring.
SST 09703–30010

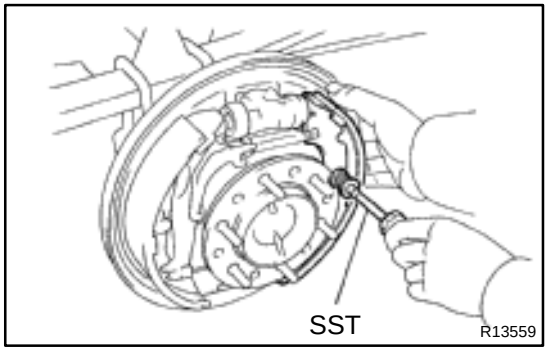

(b) Using SST, remove the shoe hold–down spring, 2 cups and pin.
SST 09718–00010

(c) Disconnect the anchor spring from the rear shoe and remove the rear shoe.

(d) Remove the anchor spring from the front shoe.

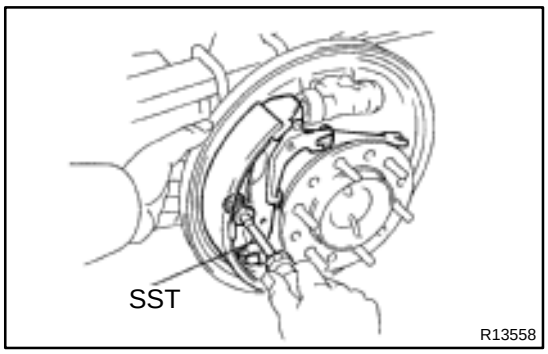

5. REMOVE FRONT SHOE

(a) Using SST, remove the shoe hold–down spring, 2 cups and pin.
SST 09718–00010

(b) Remove the return spring from the front shoe.

(c) Disconnect the parking brake cable No. 1 from the parking brake bellcrank No. 3.

(d) Remove the front shoe with adjuster.

(e) Disconnect the parking brake cable No. 1 from the front shoe.

6. REMOVE ADJUSTER FROM FRONT SHOE

(a) Remove the adjusting lever spring.

(b) Remove the adjuster.

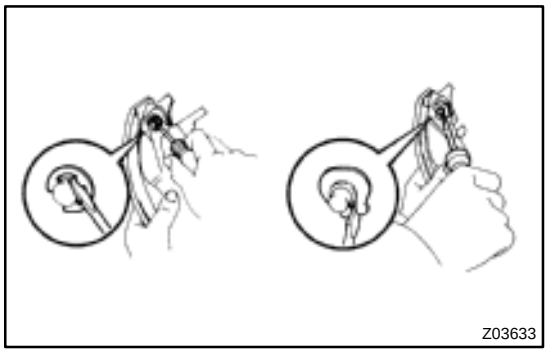

7. REMOVE AUTOMATIC ADJUSTING LEVER AND PARKING BRAKE LEVER

(a) Remove the E–ring.

(b) Remove the automatic adjusting lever.

(c) Remove the C–washer.

(d) Remove the parking brake lever.

8. REMOVE AND DISASSEMBLE PARKING BRAKE BELLCRANK

(a) Remove the clip and disconnect the parking brake cable.

(b) Remove the tension spring.

(c) Using a screwdriver, remove the C–washer and bellcrank No. 3 from the backing plate with parking brake rod.

(d) Remove the 2 bolts, parking brake bellcrank and dust cover.
Torque: 13 N·m (130 kgf·cm, 9 ft·lbf)

(e) Remove the bellcrank boot from the bellcrank bracket.

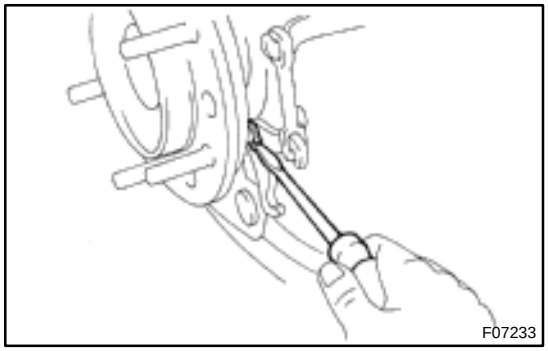

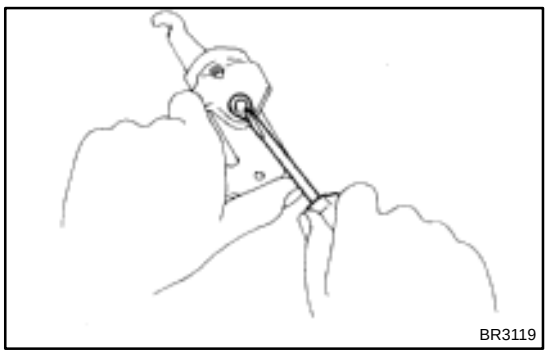

(f) Remove the C–washer and pin.

(g) Remove the parking brake bellcrank from the bellcrank bracket.

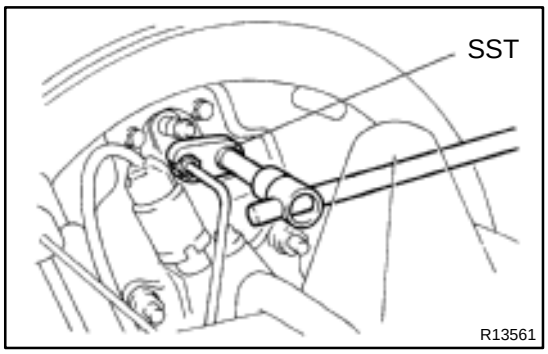

9. REMOVE WHEEL CYLINDER

(a) Using SST, disconnect the brake line. Use a container to catch the brake fluid.
SST 09023–00100
Torque: 15 N·m (155 kgf·cm, 11 ft·lbf)

(b) Remove the 2 bolts and the wheel cylinder.
Torque: 10 N·m (100 kgf·cm, 7 ft·lbf)

10. DISASSEMBLE WHEEL CYLINDER

(a) Remove the 2 boots, 2 pistons and spring.

(b) Remove the 2 piston cups from each piston.

REAR SPEED SENSOR

BR05X–03

COMPONENTS

HINT:

Pre runner is the described below.

RZN191L–TRPDKAB, RZN196L–CRPDKAB, VZN195L–CRPDKAB

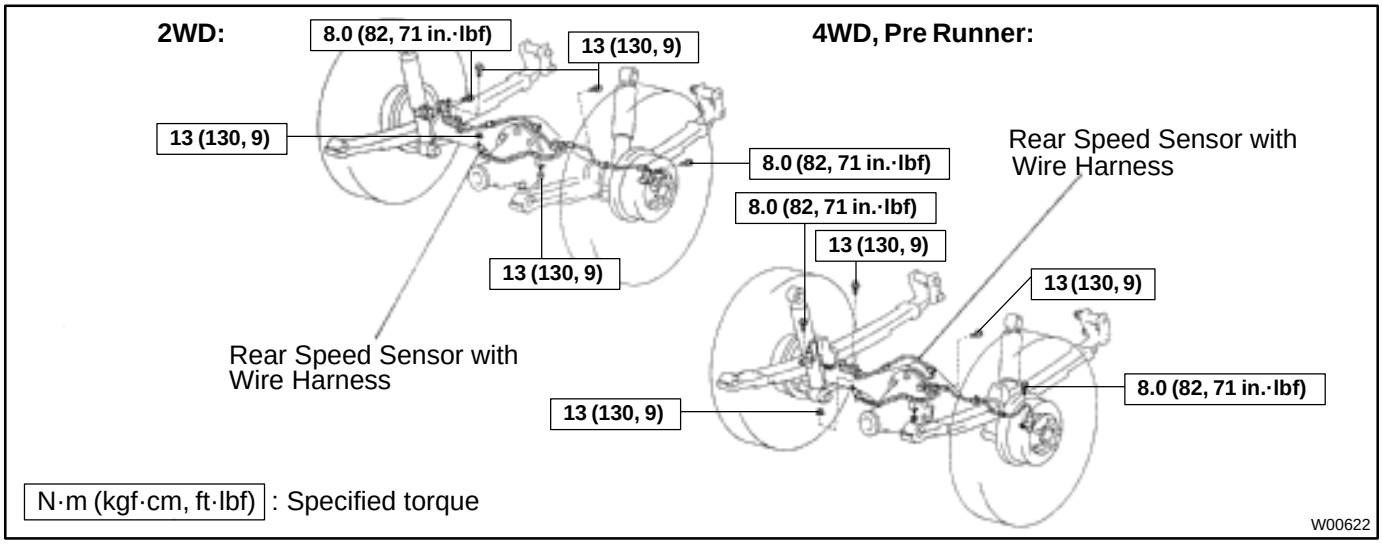

BR05Z–02

INSTALLATION

Installation is in the reverse order of removal (See page BR–66).

NOTICE:

After installation, check the speed sensor signal (See page DI–415).

BR05Y–02

REMOVAL

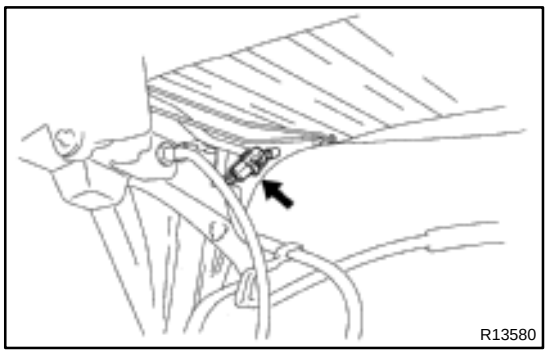

REMOVE SPEED SENSOR

(a) Disconnect the speed sensor connector, and pull out the sensor wire harness with grommet.

(b) Remove the 5 resin clips, 2 clamp set bolts and 2 nuts holding the sensor wire harness from the side rail, fuel tank and axle housing.
Torque: 13 N·m (130 kgf·cm, 9 ft·lbf)

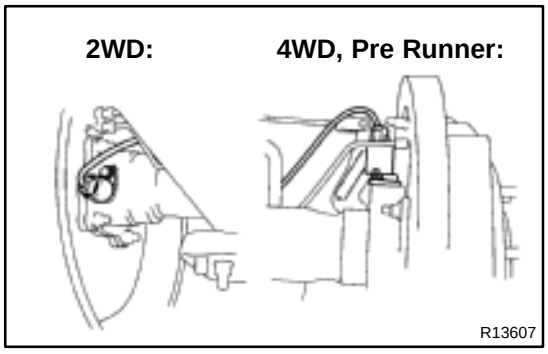

(c) Remove the 2 mounting bolts and speed sensor.
Torque: 8.0 N·m (82 kgf·cm, 71 in.·lbf)

NOTICE:

At the time of installation, please refer to the following items.

- **There are no objects on the sensor or the part of the axle end to which the sensor is to be installed.**
- **The sensor is installed flat against the axle end when you tighten the bolt.**
- **When installing the resin clips, use new ones.**

GENERATOR

COMPONENTS

CH00X–03

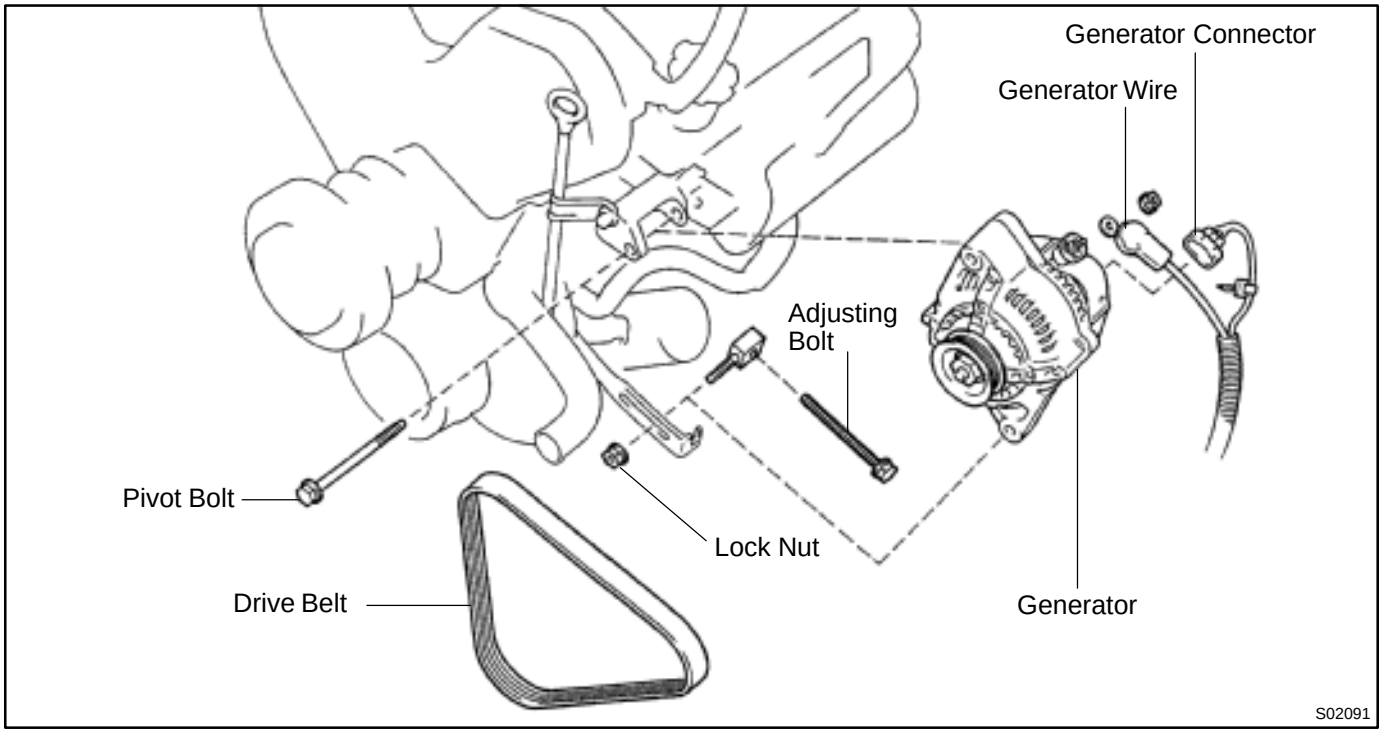

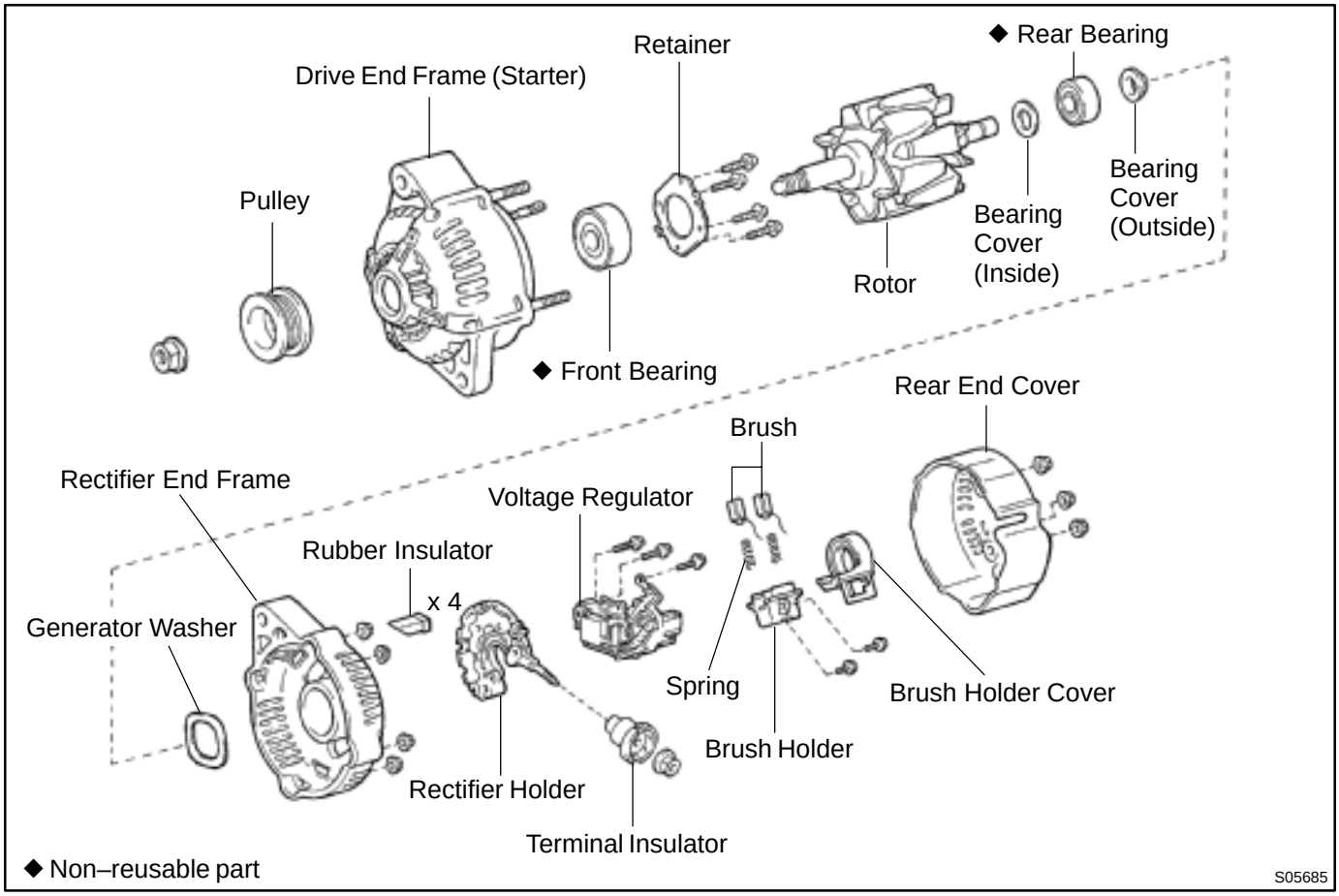

CH0CG–01

DISASSEMBLY

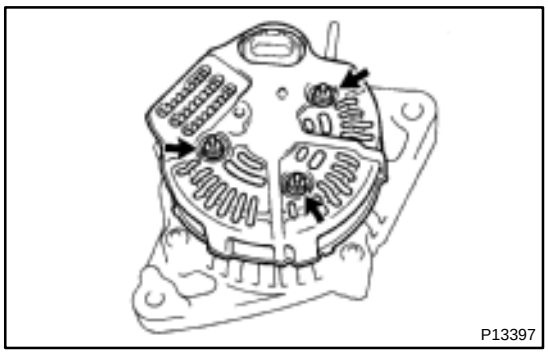

1. REMOVE REAR END COVER

(a) Remove the nut and terminal insulator.

(b) Remove the 3 nuts and end cover.

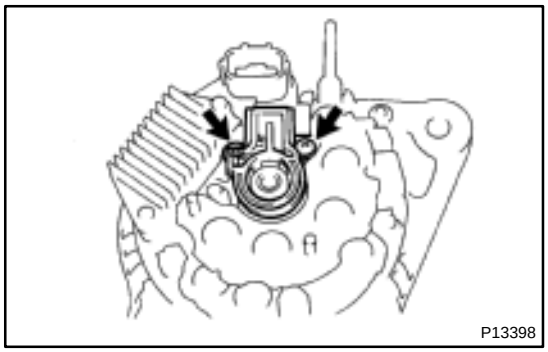

2. REMOVE BRUSH HOLDER

(a) Remove the 2 screws, brush holder and cover.

(b) Remove the brush holder cover from the brush holder.

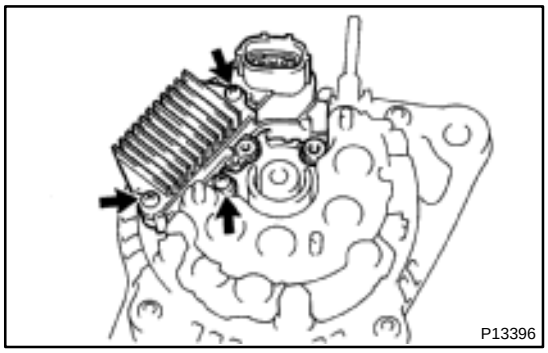

3. REMOVE VOLTAGE REGULATOR

Remove the 3 screws and voltage regulator.

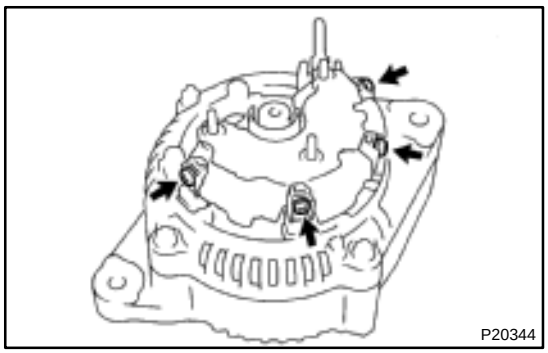

4. REMOVE RECTIFIER HOLDER

(a) Remove the 4 screws and rectifier holder.

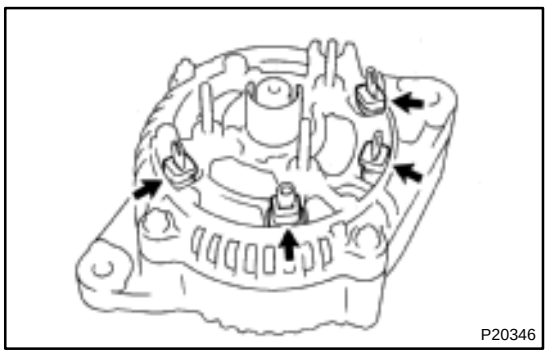

(b) Remove the 4 rubber insulators.

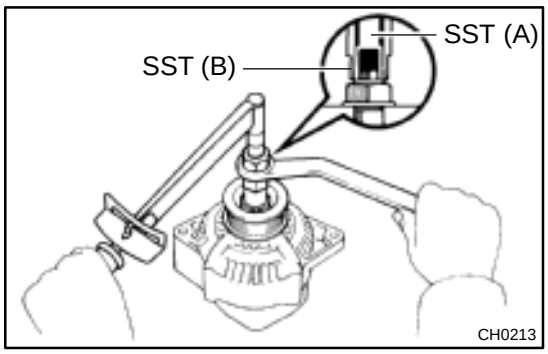

5. REMOVE PULLEY

(a) Hold SST (A) with a torque wrench, and tighten SST (B) clockwise to the specified torque.
SST 09820–63010
Torque:39 N·m (400 kgf·cm, 29 ft·lbf)

(b) Check that SST (A) is secured to the rotor shaft.

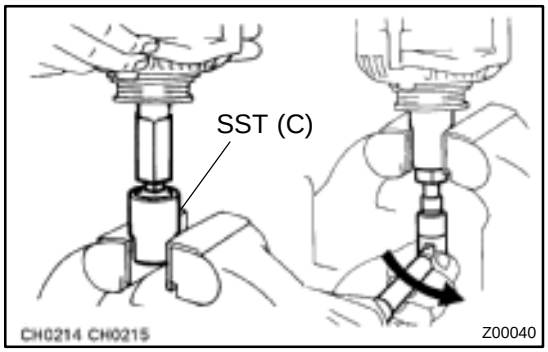

(c) As shown in the illustration, mount SST (C) in a vise, and install the generator with SST (A) and (B) to SST (C).

(d) To loosen the pulley nut, turn SST (A) in the direction shown in the illustration.

NOTICE:

To prevent damage to the rotor shaft, do not loosen the pulley nut more than one–half of a turn.

(e) Remove the generator with SST (A) and (B) from SST (C).

(f) Turn SST (B) and remove SST (A) and (B).

(g) Remove the pulley nut and pulley.

6. REMOVE RECTIFIER END FRAME

(a) Remove the 4 nuts.

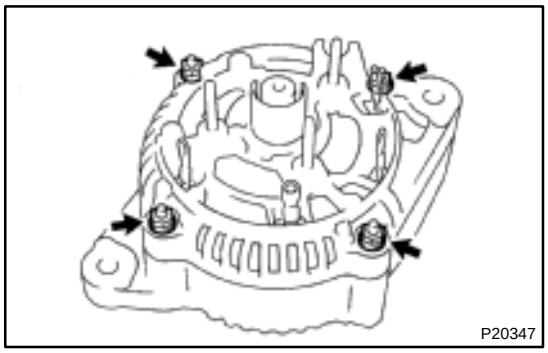

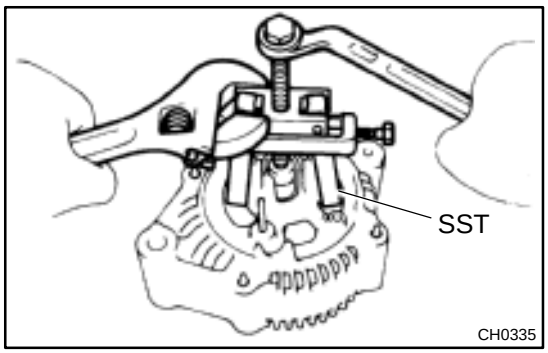

(b) Using SST, remove the rectifier end frame.
SST 09286–46011

(c) Using snap ring pliers, remove the generator washer from the rectifier end frame.

7. REMOVE ROTOR FROM DRIVE END FRAME

CH0CH–01

INSPECTION

1. INSPECT ROTOR

(a) Check the rotor for open circuit.
Using an ohmmeter, check that there is continuity between the slip rings.
Standard resistance: 2.1 – 2.5 Ω at 20˚C (68˚F)

If there is no continuity, replace the rotor.

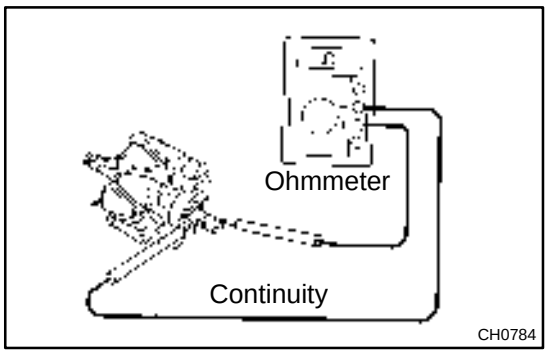

(b) Check the rotor for ground.
Using an ohmmeter, check that there is no continuity between the slip ring and rotor.

If there is continuity, replace the rotor.

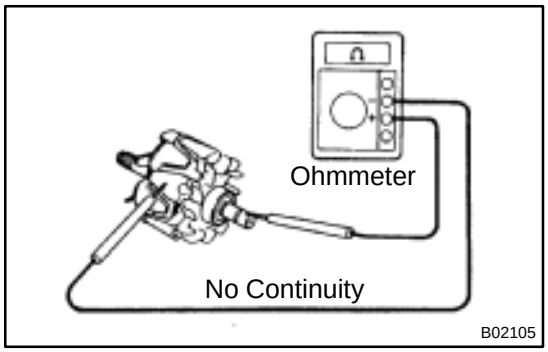

(c) Check that the slip rings are not rough or scored.

If rough or scored, replace the rotor.

(d) Using vernier calipers, measure the slip ring diameter.
Standard diameter: 14.2 – 14.4 mm (0.559 – 0.567 in.)
Minimum diameter: 12.8 mm (0.504 in.)

If the diameter is less than minimum, replace the rotor.

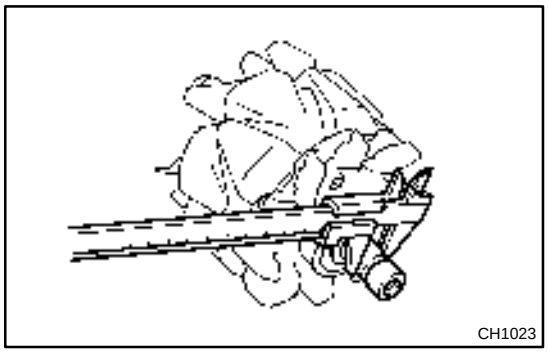

2. INSPECT STATOR (DRIVE END FRAME)

(a) Check the stator for open circuit.
Using an ohmmeter, check that there is continuity between the coil leads.

If there is no continuity, replace the drive end frame assembly.

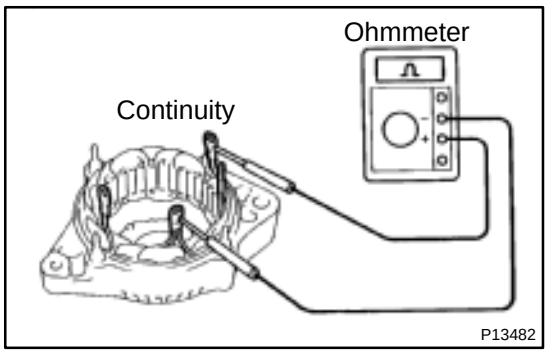

(b) Check the stator for ground.
Using an ohmmeter, check that there is no continuity between the coil lead and drive end frame.

If there is continuity, replace the drive end frame assembly.

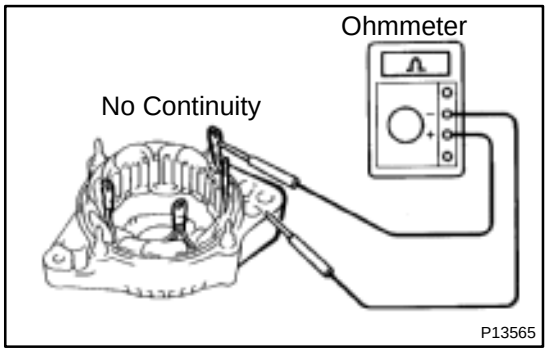

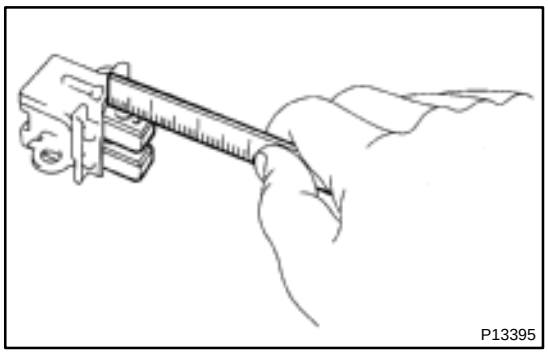

3. INSPECT BRUSHES

Using a scale, measure the exposed brush length.

Standard exposed length:
9.5 – 11.5 mm (0.374 – 0.453 in.)
Minimum exposed length: 1.5 mm (0.059 in.)

If the exposed length is less than minimum, replace the brushes. (See page CH–11)

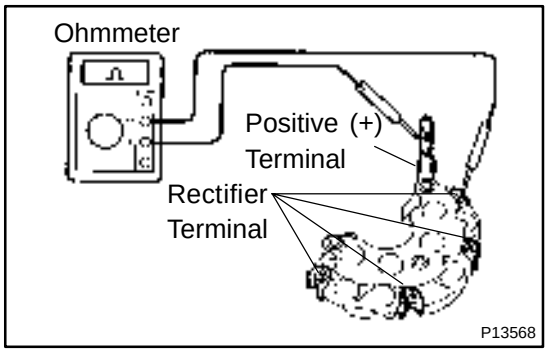

4. INSPECT RECTIFIERS (RECTIFIRE HOLDER)

(a) Check the positive (+) rectifire.
  (1) Using an ohmmeter, connect one tester probe to the positive (+) terminal and the other to each rectifier terminal.
  (2) Reverse the polarity of the tester probes and repeat step (a).
  (3) Check that one shows continuity and the other shows no continuity.

If continuity is not as specified, replace the rectifier holder.

(b) Check the negative (–) rectifire.
  (1) Using an ohmmeter, connect one tester probe to each negative (–) terminal and the other to each rectifier terminal.
  (2) Reverse the polarity of the tester probes and repeat step (a).
  (3) Check that one shows continuity and the other shows no continuity.

If continuity is not as specified, replace the rectifier holder.

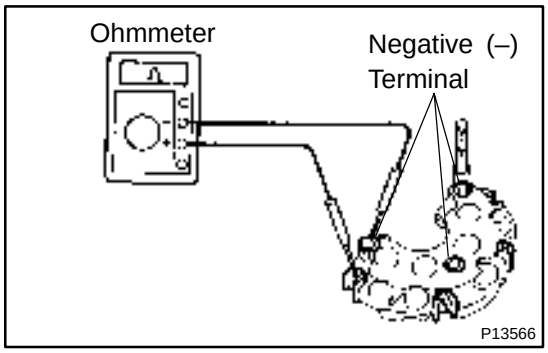

5. INSPECT BEARING

Check the bearing is not rough or worn.

If necessary, replace the bearing. (See page CH–11)

CH0CK–01

INSTALLATION

Installation is in the reverse order of removal. (See page CH–6)

CHARGING SYSTEM

CH0CE–01

ON–VEHICLE INSPECTION

CAUTION:

- **Check that the battery cables are connected to the correct terminals.**
- **Disconnect the battery cables when the battery is given a quick charge.**
- **Do not perform tests with a high voltage insulation resistance tester.**
- **Never disconnect the battery while the engine is running.**

1. CHECK BATTERY ELECTROLYTE LEVEL

Check the electrolyte quantity of each cell.

Maintenance–Free Battery:

If under the lower level, replace the battery (or add distilled water if possible) and check the charging system.

Except Maintenance–Free Battery:

If under the lower level, add distilled water.

Except Maintenance–Free Battery



S05376

2. Except Maintenance–Battery: CHECK BATTERY SPECIFIC GRAVITY

Check the specific gravity of each cell.

Standard specific gravity: 1.25 – 1.29 at 20˚C (68˚F)

If the specific gravity is less than specification, charge the battery.

Maintenance–Free Battery

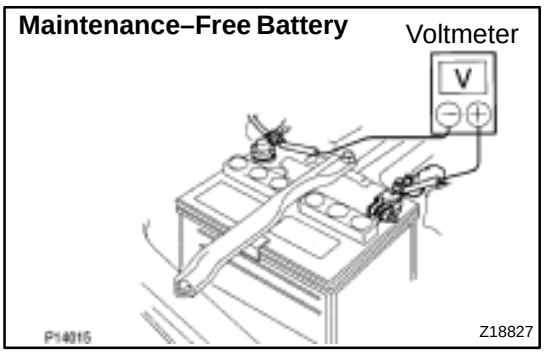

P14015

Z18827

3. Maintenance–Free Battery: CHECK BATTERY VOLTAGE

(a) After having driven the vehicle and in the case that 20 minutes have not passed after having stopped the engine, turn the ignition switch ON and turn on the electrical system (headlight, blower motor, rear defogger etc.) for 60 seconds to remove the surface charge.

(b) Turn the ignition switch OFF and turn off the electrical systems.

(c) Measure the battery voltage between the negative (–) and positive (+) terminals of the battery.

Standard voltage: 12.5 – 12.9 V at 20˚C (68˚F)

If the voltage is less than specification, charge the battery.

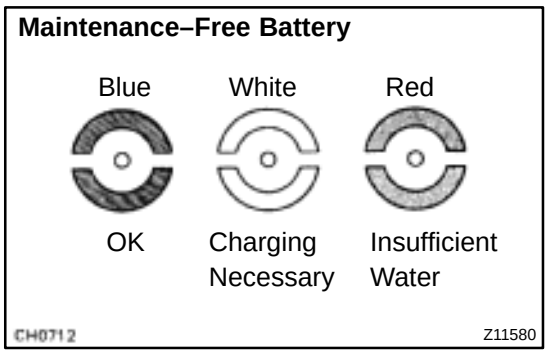

HINT:
Check the indicator as shown in the illustration.

4. CHECK BATTERY TERMINALS, FUSIBLE LINK AND FUSES

(a) Check that the battery terminals are not loose or corroded.

If the terminals are corroded, clean the terminals.

(b) Check the H–fuses, M–fuse and fuses for continuity.

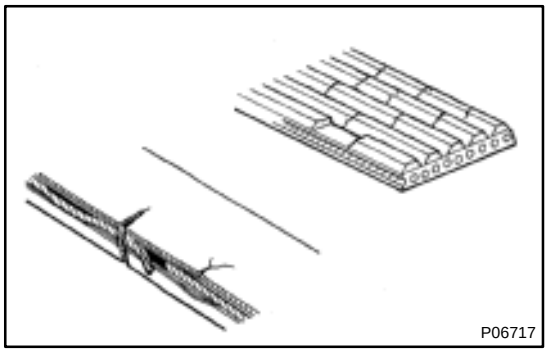

5. INSPECT DRIVE BELT

(a) Visually check the belt for excessive wear, frayed cords etc.

HINT:
Cracks on the ribbed side of the belt are considered acceptable. If the belt has chunks missing from the ribs, it should be replaced.

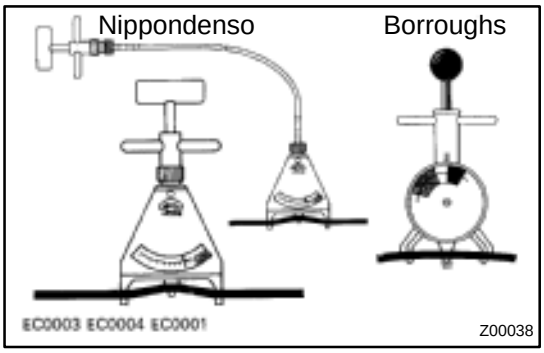

(b) Using a belt tension gauge, check the drive belt tension.
Belt tension gauge:
DENSO BTG–20 (95506–00020)
Borroughs No. BT–33–73F
Drive belt tension:

New belt	160 ± 20 lbf
Used belt	100 ± 20 lbf

If necessary, adjust the drive belt tension.

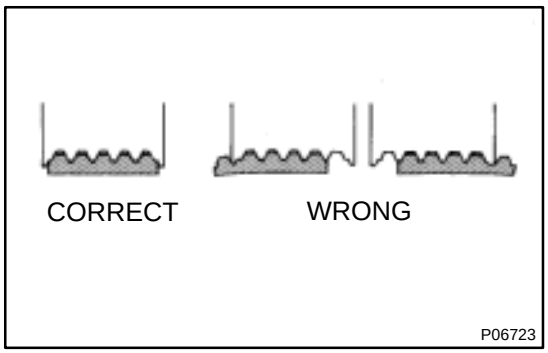

HINT:

- After installing the drive belt, check that it fits properly in the ribbed grooves. Check with your hand to confirm that the belt has not slipped out of the groove on the bottom of the crank pulley.
- ”New belt” refers to a belt which has been used less than 5 minutes on a running engine.
- ”Used belt” refers to a belt which has been used on a running engine for 5 minutes or more.
- After installing a new belt, run the engine for approx. 5 minutes and then recheck the tension.

6. VISUALLY CHECK GENERATOR WIRING AND LISTEN FOR ABNORMAL NOISES

(a) Check that the wiring is in good condition.

(b) Check that there is no abnormal noise from the generator while the engine is running.

7. CHECK CHARGE WARNING LIGHT CIRCUIT

(a) Warm up the engine and then turn it off.

(b) Turn off all accessories.

(c) Turn the ignition switch ”ON”. Check that the charge warning light is lit.
(d) Start the engine. Check that the light goes off.

If the light does not go off as specified, troubleshoot the charge light circuit.

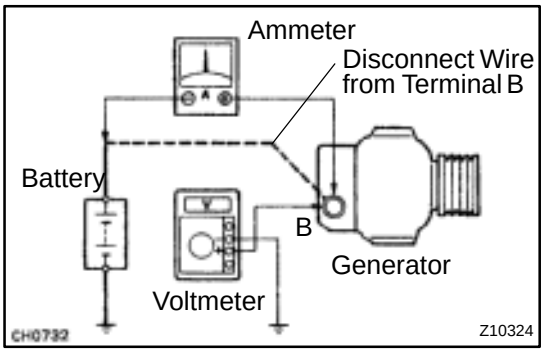

8. CHECK CHARGING CIRCUIT WITHOUT LOAD

HINT:

If a battery/generator tester is available, connect the tester to the charging circuit according to the manufactuer’s instructions.

(a) If a tester is not available, connect a voltmeter and ammeter to the charging circuit as follows:
  (1) Disconnect the wire from terminal B of the generator and connect the wire to the negative (–) terminal of the ammeter.
  (2) Connect the test lead from the positive (+) terminal of the ammeter to terminal B of the generator.
  (3) Connect the positive (+) lead of the voltmeter to terminal B of the generator.
  (4) Ground the negative (–) lead of the voltmeter.
(b) Check the charging circuit as follows:
  With the engine running from idling to 2,000 rpm, check the reading on the ammeter and voltmeter.
  Standard amperage: 10 A or less
  Standard voltage: 13.2 – 14.7 V

If the voltage reading is greater than the standard voltage, replace the voltage regulator.

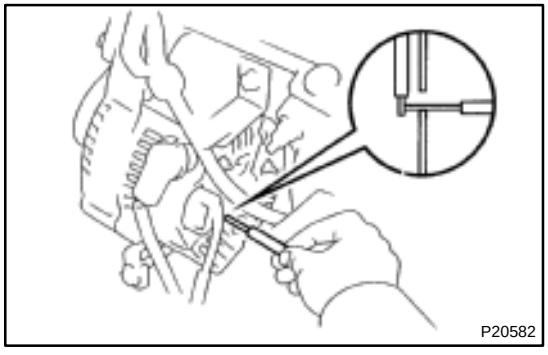

If the voltage reading is less than the standard voltage, check the voltage regulator and generator as follows:

- With terminal F grounded, start the engine and check the voltage reading of terminal B.
- If the voltage reading is higher than the standard voltage, replace the voltage regulator.
- If the voltage reading is less than the standard voltage, repair the generator.

9. INSPECT CHARGING CIRCUIT WITH LOAD

(a) With the engine running at 2,000 rpm, turn on the high beam headlights and place the heater fan control switch to HI.

(b) Check the reading on the ammeter.

Standard amperage: 30 A or more

If the ammeter reading is less than 30 A, repair the generator.

HINT:

If the battery is fully charged, the indication will sometimes be less than 30 A.

CH0CJ–01

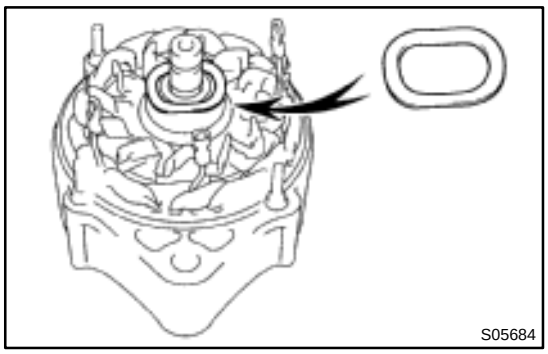

REASSEMBLY

1. INSTALL ROTOR TO DRIVE END FRAME

(a) Place the rectifier end frame on the pulley.

(b) Install the rotor to the rectifier end frame.

2. INSTALL RECTIFIER END FRAME

(a) Place the generator washer on the rotor.

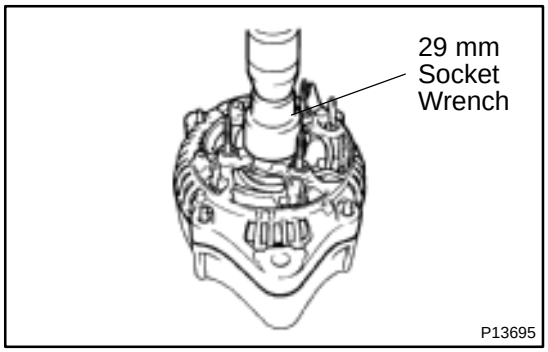

(b) Using a 29 mm socket wrench and press, slowly press in the rectifier end frame.

(c) Install the 4 nuts.

Torque: 4.5 N·m (45 kgf·cm, 39 in.·lbf)

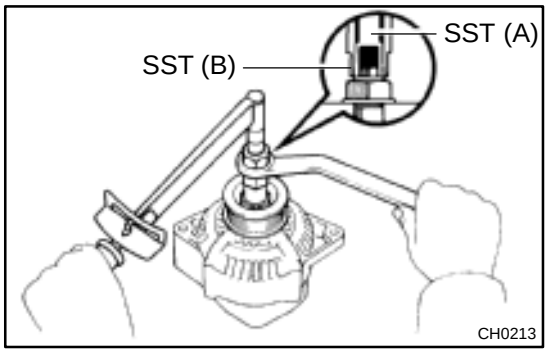

3. INSTALL PULLEY

(a) Install the pulley to the rotor shaft by tightening the pulley nut by hand.

(b) Hold SST (A) with a torque wrench, and tighten SST (B) clockwise to the specified torque.

SST 09820–63010

Torque: 39 N·m (400 kgf·cm, 29 ft·lbf)

(c) Check that SST (A) is secured to the pulley shaft.

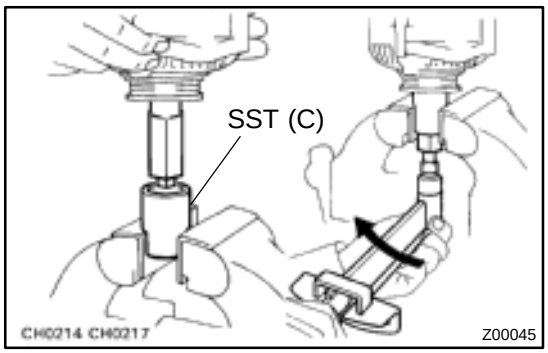

(d) As shown in the illustration, mount SST (C) in a vise, and install the generator with SST (A) and (B) to SST (C).

(e) To torque the pulley nut, turn SST (A) in the direction shown in the illustration.

Torque: 110 N·m (1,125 kgf·cm, 81 ft·lbf)

(f) Remove the generator with SST (A) and (B) from SST (C).

(g) Turn SST (B) and remove SST (A) and (B).

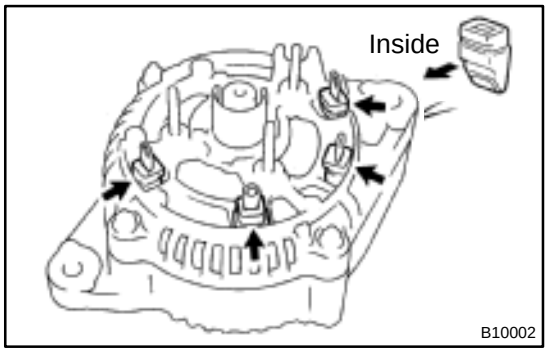

4. INSTALL RECTIFIER HOLDER

(a) Install the 4 rubber insulators on the lead wires.

NOTICE:

Be careful of the rubber insulators installation direction.

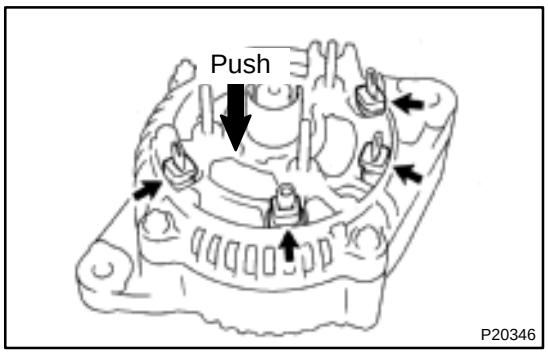

(b) Install the rectifier holder while pushing it with the 4 screws.
Torque: 2.0 N·m (20 kgf·cm, 18 in.·lbf)

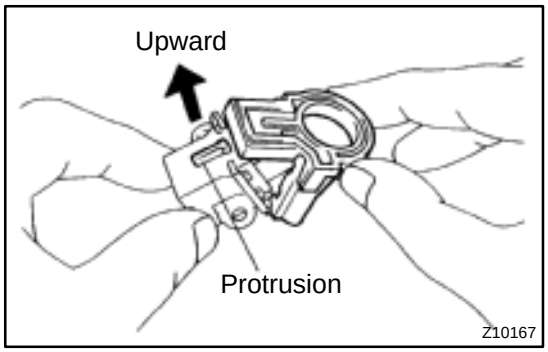

5. INSTALL BRUSH HOLDER AND VOLTAGE REGULATOR

(a) Install the brush holder cover to the brush holder.

NOTICE:
Be careful of the holder installation direction.

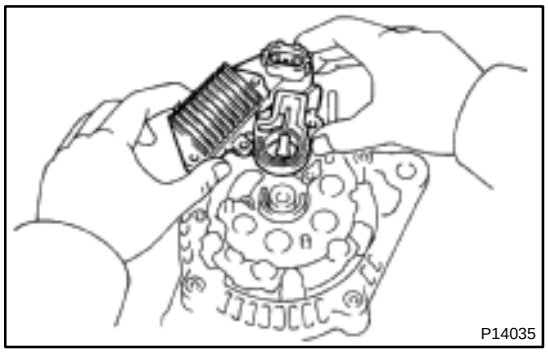

(b) Install the voltage regulator and brush holder to the rear end frame horizontally as shown in the illustration.

HINT:
Check that the brush holder's cover doesn't slip to one side during installation.

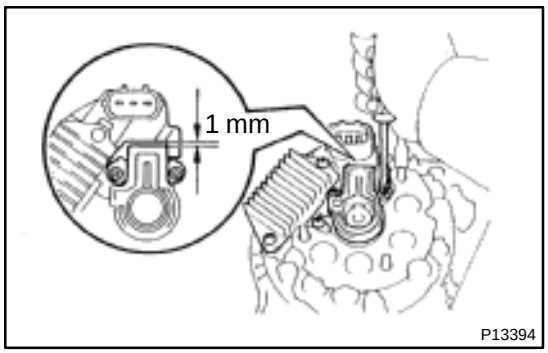

(c) Tighten the 5 screws until there is a clearance of at least 1 mm (0.04 in.) between the brush holder cover and connector.

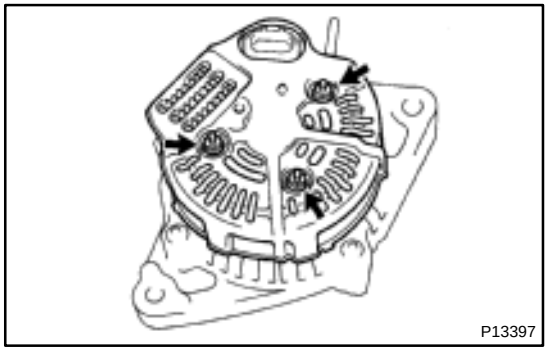

6. INSTALL REAR END COVER

(a) Install the end cover with the 3 nuts.
Torque: 4.5 N·m (45 kgf·cm, 39 in.·lbf)

(b) Install the terminal insulator with the nut.
Torque: 4.1 N·m (42 kgf·cm, 36 in.·lbf)

7. CHECK THAT ROTOR ROTATES SMOOTHLY

CH0CF–01

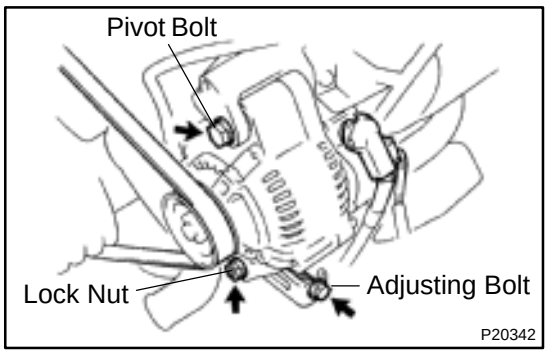

REMOVAL

1. REMOVE GENERATOR DRIVE BELT

(a) Loosen the adjusting lock nut and pivot bolt.

(b) Loosen the adjusting bolt, and remove the drive belt.

2. REMOVE GENERATOR

(a) Disconnect the generator connector.

(b) Remove the nut, and disconnect the generator wire.

(c) Remove the pivot bolt and adjusting lock nut.

(d) Remove the generator.

Torque:

51 N·m (520kgf·cm, 38 ft·lbf) for pivot bolt

18.5 N·m (189kgf·cm, 25 ft·lbf) for adjusting lock nut

CH0CI–01

REPLACEMENT

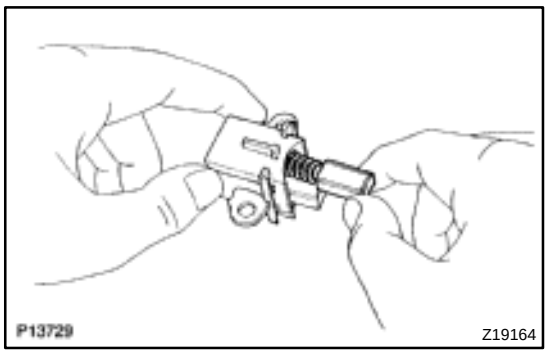

1. REPLACE BRUSHES

(a) Unsolder and remove the brush and spring.

(b) Run the wire of a new brush through the spring and the hole in the brush holder, and insert the spring and brush into the brush holder.

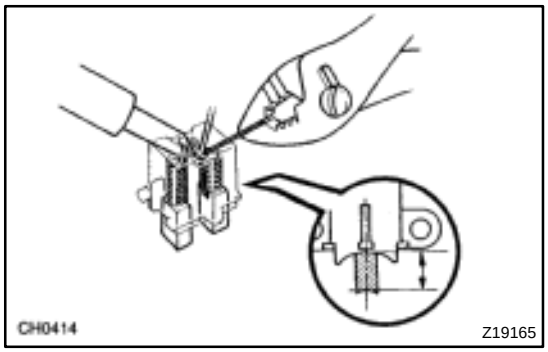

(c) Solder the brush wire to the brush holder at the specified exposed length.
Exposed length: 9.5 – 11.5 mm (0.374 – 0.453 in.)

(d) Check that the brush moves smoothly in the brush holder.

(e) Cut off the excess wire.

(f) Apply insulation paint to the soldered area.

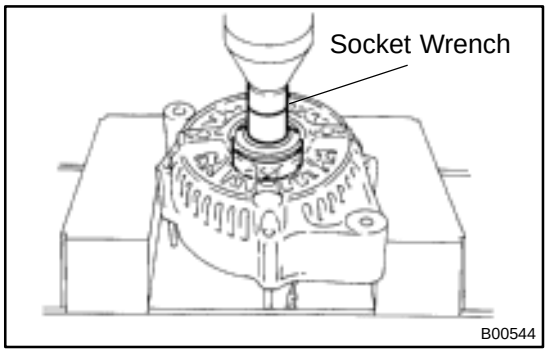

2. REPLACE FRONT BEARING

(a) Remove the 4 screws, bearing retainer and bearing.

(b) Using a socket wrench and press, press out the bearing.

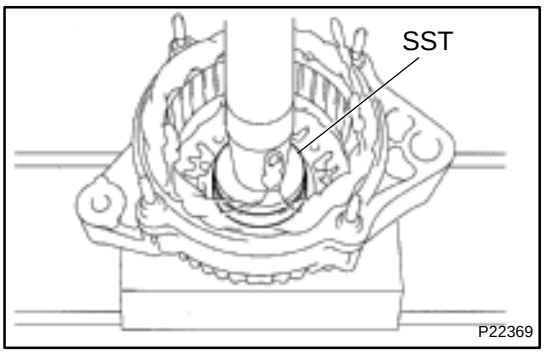

(c) Using SST and a press, press in a new bearing.
SST 09950–60010 (09951–00500)

(d) Install the bearing retainer with the 4 screws.
Torque: 2.6 N·m (27 kgf·cm, 23 in.·lbf)

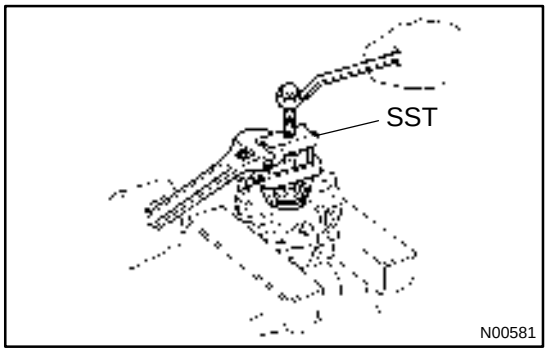

3. REPLACE REAR BEARING

(a) Using SST, remove the bearing cover (outside) and bearing.
SST 09820–00021

NOTICE:
Be careful not to damage the fan.

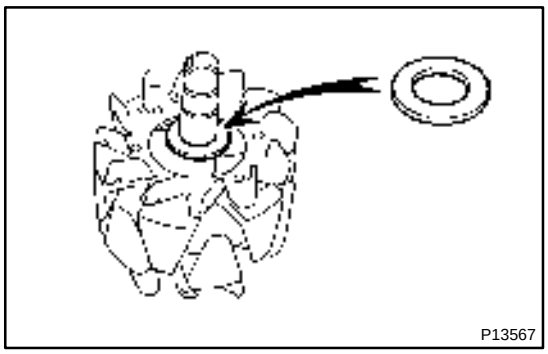

(b) Remove the bearing cover (inside).
(c) Place the bearing cover (inside) on the rotor.

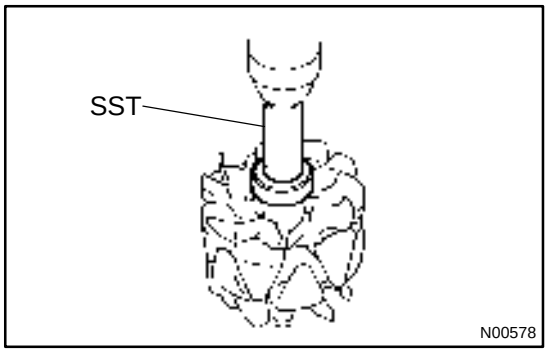

(d) Using SST and a press, press in a new bearing.
SST 09820–00030

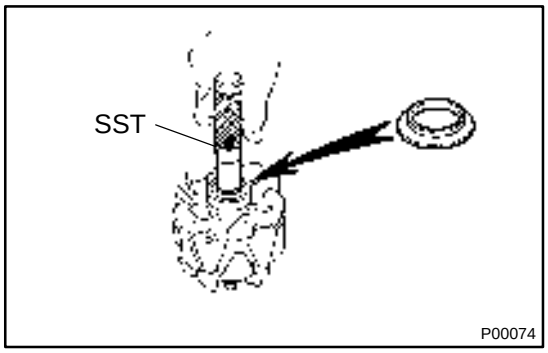

(e) Using SST, push in the bearing cover (outside).
SST 09285–76010

COOLANT

CO0X6–01

INSPECTION

1. CHECK ENGINE COOLANT LEVEL AT RESERVOIR TANK

The engine coolant level should be between the ”LOW” and ”FULL” lines. When the engine is cold.

If low, check for leaks and add ”TOYOTA Long Life Coolant” or equivalent up to the ”FULL” line.

2. CHECK ENGINE COOLANT QUALITY

(a) Remove the radiator cap.

CAUTION:

To avoid the danger of being burned, do not remove the radiator cap while the engine and radiator are still hot, as fluid and steam can be blown out under pressure.

(b) There should not be any excessive deposits of rust or scale around the radiator cap or water outlet filler hole, and the coolant should be free from oil.

If they are excessively dirty, clean the coolant passages and replace the coolant.

(c) Reinstall the radiator cap.

REPLACEMENT

1. DRAIN ENGINE COOLANT

(a) Remove the radiator cap.

CAUTION:

To avoid the danger of being burned, do not remove the radiator cap while the engine and radiator are still hot, as fluid and steam can be blown out under pressure.

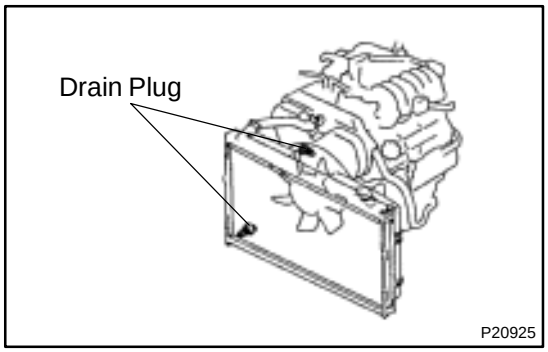

(b) Loosen the drain plugs, and drain the engine coolant.

(c) Close the drain plugs.

2. REFILL WITH ENGINE COOLANT

(a) Slowly fill the system with engine coolant.

- Use of improper coolants may damage engine cooling system. CO0X7–01
- Use "TOYOTA Long Life Coolant" or equivalent and mix it with plain water according to the manufacturer's directions.
- Use of the coolant which includes more than 50% (freezing protection down to –35˚C (–31 ˚F)) or 60% (freezing protection down to –50˚C (–58 ˚F)) of ethylene–glycol is recommended, but not more than 70%

NOTICE:

- **Do not use an alcohol type engine coolant.**
- **The engine coolant should be mixed with demineralized water or distilled water.**

Capacity:

M/T	9.7 liters (10.3 US qts, 8.5 lmp. qts)
A/T	9.5 liters (10.0 US qts, 8.4 lmp. qts)

(b) Reinstall the radiator cap.

(c) Start the engine, and bleed the cooling system.

(d) If necessary, refill engine coolant into the reservoir until it is "FULL" line.

3. CHECK ENGINE COOLANT FOR LEAKS

CO02E–03

COMPONENTS

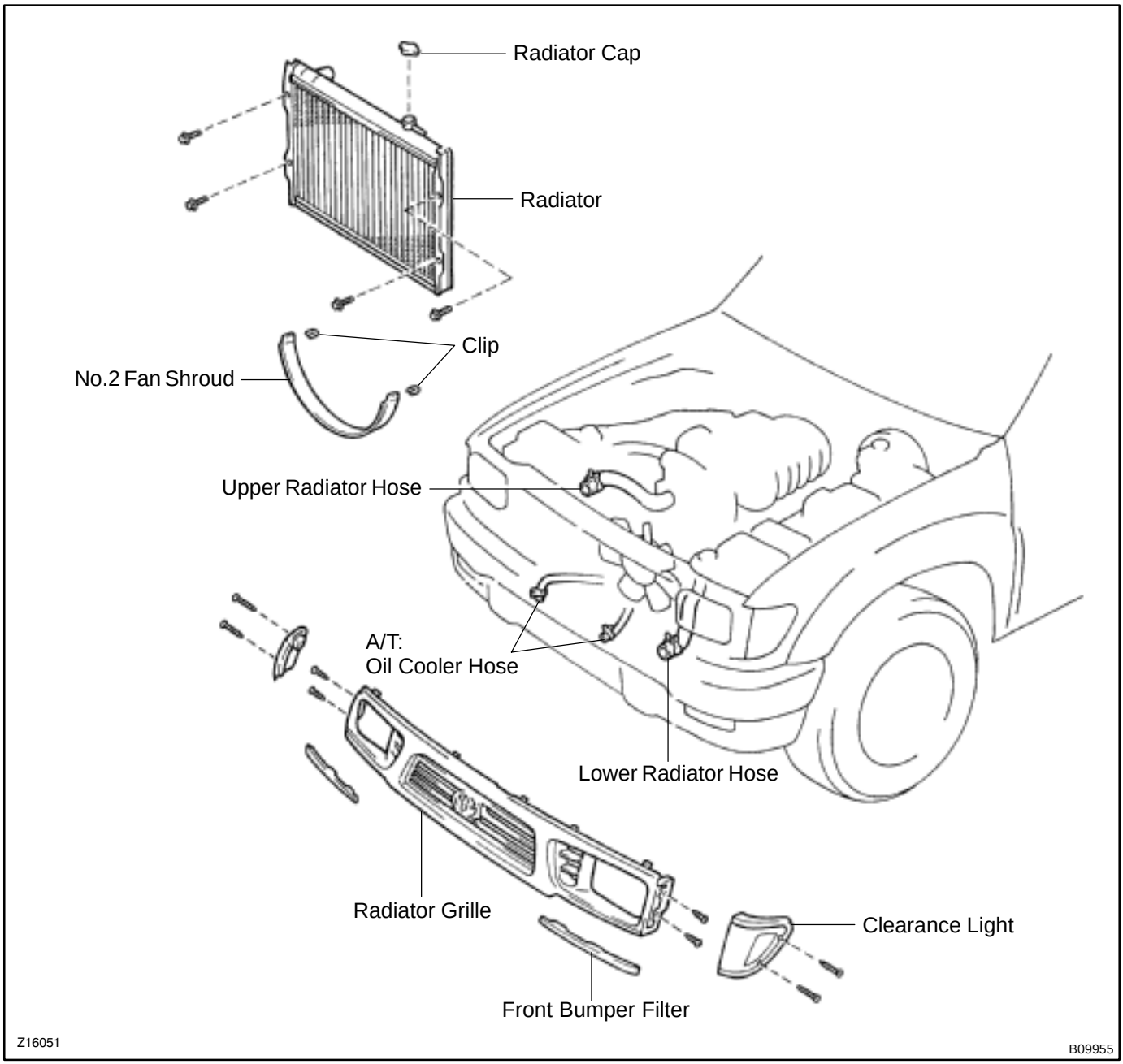

CO02G–03

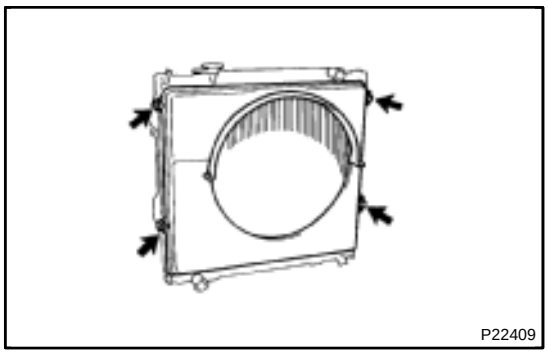
P22409

DISASSEMBLY

1. REMOVE NO.1 FAN SHROUD

Remove the 4 bolts and No.1 fan shroud.

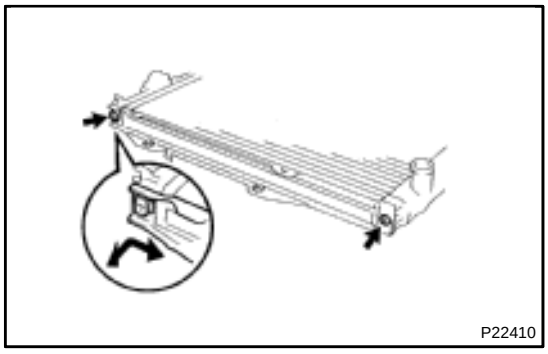
P22410

2. REMOVE RADIATOR SUPPORTS

Using a torx wrench, remove the 4 torx screws and the 2 radiator supports.

Torx wrench: T30 (Part No. 09042–00010 or locally manufactured tool)

HINT:

Lift up the floor carpet and loosen the screw.

CO0XA–01

INSTALLATION

Installation is in the reverse order of removal (See page CO–16).

RADIATOR

CO0X8–01

ON–VEHICLE CLEANING

Using water or a steam cleaner, remove any mud or dirt from the radiator core.

NOTICE:

If using a high pressure type cleaner, be careful not to deform the fins of the radiator core. (i.e. Maintain a distance between the cleaner nozzle and radiator core)

CO02D–03

ON–VEHICLE INSPECTION

1. REMOVE RADIATOR CAP

CAUTION:

To avoid the danger of being burned, do not remove the radiator cap while the engine and radiator are still hot, as fluid and steam can be out under pressure.

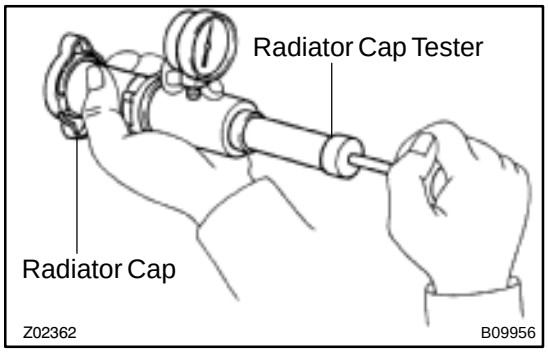

2. INSPECT RADIATOR CAP

NOTICE:

- **If the radiator cap has contaminations, always rinse it with water.**
- **Before using a radiator cap tester, wet the relief valve and pressure valve with engine coolant or water.**

Using a radiator cap tester, pump the tester and measure the relief valve opening pressure.

Standard opening pressure:
74 – 103 kPa (0.75 – 1.05 kgf/cm^2, 10.7 – 14.9 psi)
Minimum opening pressure:
59 kPa (0.6 kgf/cm^2, 8.5 psi)

HINT:

Use the tester's maximum reading as the opening pressure.

If the opening pressure is less than minimum, replace the radiator cap.

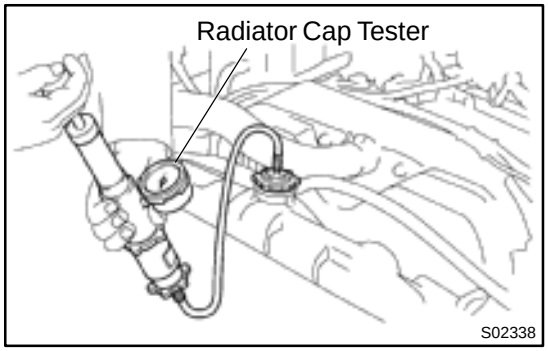

3. INSPECT COOLING SYSTEM FOR LEAKS

(a) Fill the radiator with coolant and attach a radiator cap tester.

(b) Warm up the engine.

(c) Pump it to 118 kPa (1.2 kgf/cm^2, 17.1 psi), and check that the pressure does not drop.

If the pressure drops, check the hoses, radiator or water pump for leaks. If no external leaks are found, check the heater core, cylinder block and head.

4. REINSTALL RADIATOR CAP

CO0X9–01

REASSEMBLY

Reassembly is in the reverse order of disassembly (See page CO–17).

CO02F–03

REMOVAL

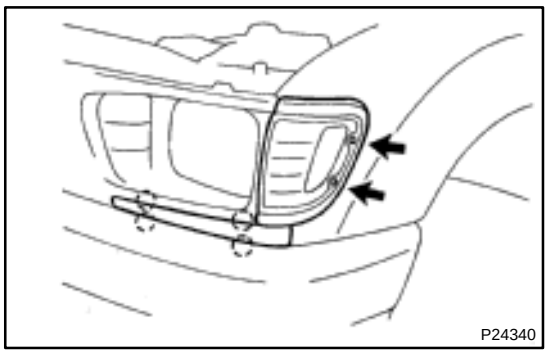

1. DRAIN ENGINE COOLANT

2. REMOVE FRONT BUMPER FILLER

3. REMOVE RADIATOR GRILLE

(a) Remove the 4 screws and clearance lights.

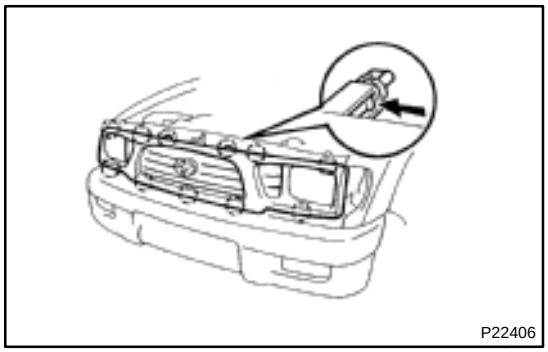

(b) Remove the 1 screw, 11 clips and radiator grille.

4. DISCONNECT UPPER RADIATOR HOSE

5. DISCONNECT RADIATOR RESERVOIR HOSE

6. DISCONNECT LOWER RADIATOR HOSE

7. REMOVE RADIATOR NO.2 FAN SHROUD

8. A/T:
DISCONNECT OIL COOLER HOSES

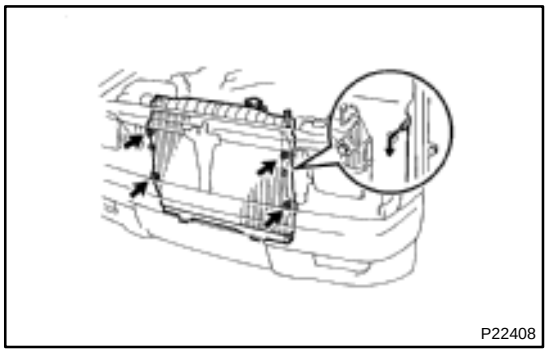

9. REMOVE RADIATOR

Remove the 4 bolts and the radiator.

Torque: 12 N·m (120 kgf·cm, 8.7 ft·lbf)

HINT:

Insert the tabs of the radiator support through the radiator service holes.

THERMOSTAT

COMPONENTS

CO028–03

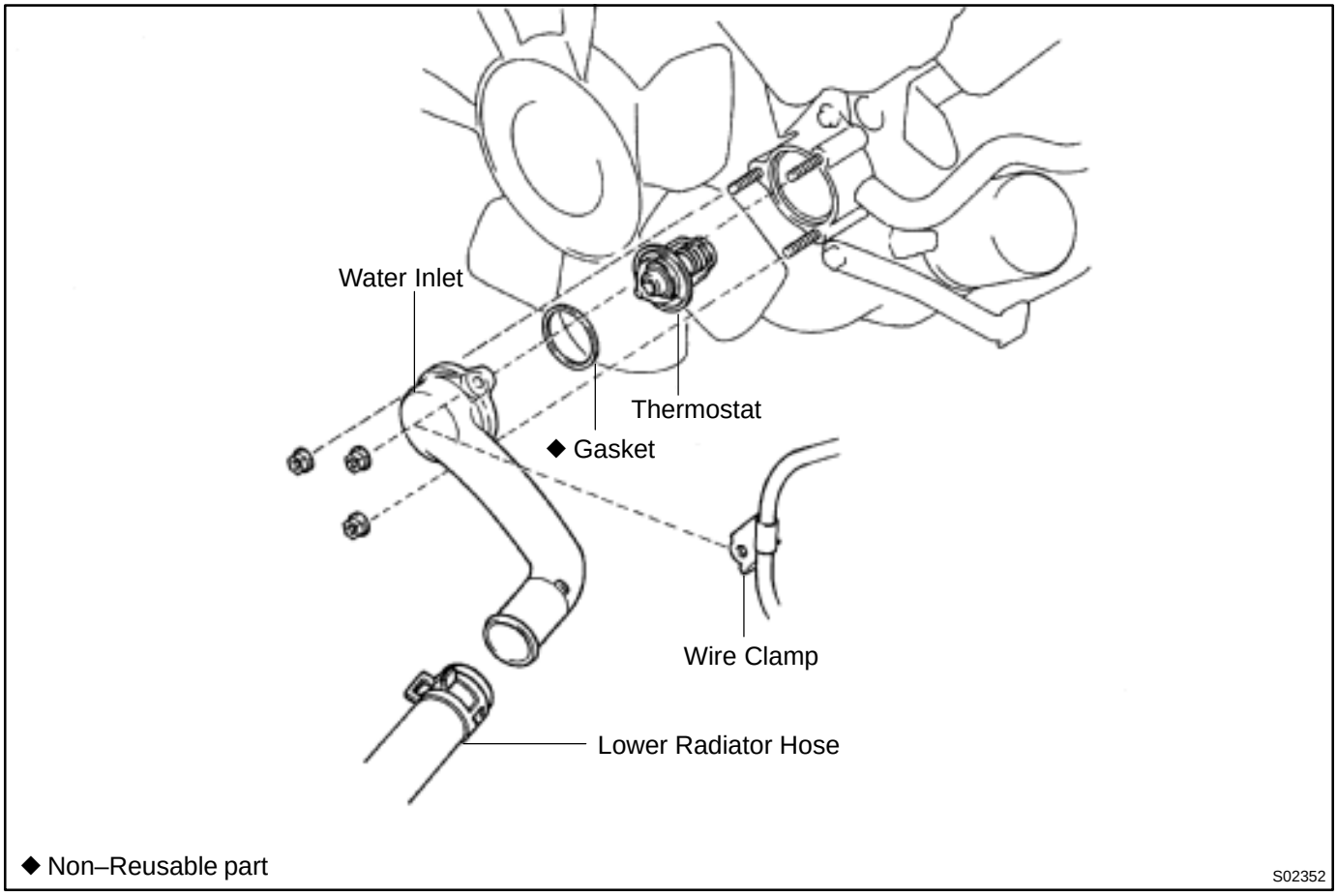

CO02A–04

INSPECTION

INSPECT THERMOSTAT

HINT:

Thermostat is numbered according to the valve opening temperature.

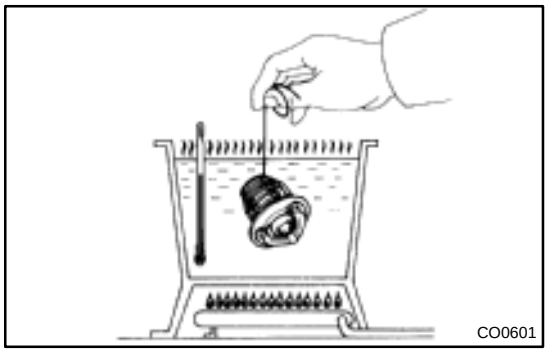

(a) Immerse the thermostat in water and gradually heat the water.

(b) Check the valve opening temperature.

Valve opening temperature: 80 – 84˚C (176 – 183˚F)

If the valve opening temperature is not as specified, replace the thermostat.

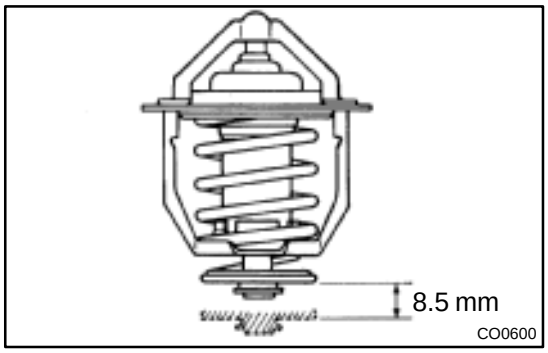

(c) Check the valve lift.

Valve lift: 8.5 mm (0.335 in.) or more at 95˚C (203˚F)

If the valve lift is not as specified, replace the thermostat.

(d) Check that the valve is fully closed when the thermostat is at low temperatures (below 40˚C (104˚F)).

If not closed, replace the thermostat.

CO02B–03

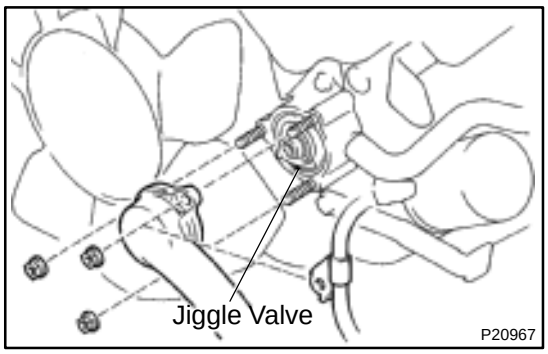

INSTALLATION

1. INSTALL THERMOSTAT

(a) Place a new gasket to the thermostat.

(b) Install the thermostat with the jiggle valve downward.

(c) Install the water inlet with the 3 nuts.

Torque: 20 N·m (200 kgf·cm, 14 ft·lbf)

2. CONNECT LOWER RADIATOR HOSE

3. FILL WITH ENGINE COOLANT

4. START ENGINE AND CHECK FOR LEAKS

CO029–02

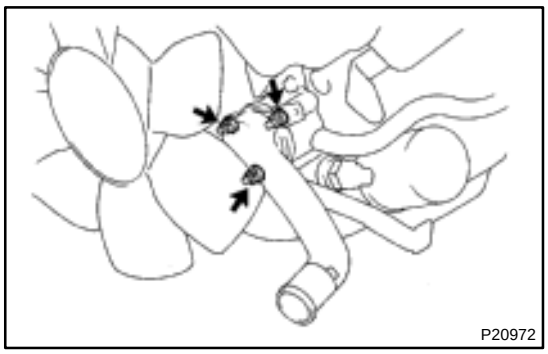

REMOVAL

1. DRAIN ENGINE COOLANT

2. DISCONNECT LOWER RADIATOR HOSE

3. REMOVE THERMOSTAT

(a) Remove the 3 nuts, water inlet and thermostat with gasket from the water pump.

(b) Remove the gasket from the thermostat.

WATER PUMP

COMPONENTS

CO024–03

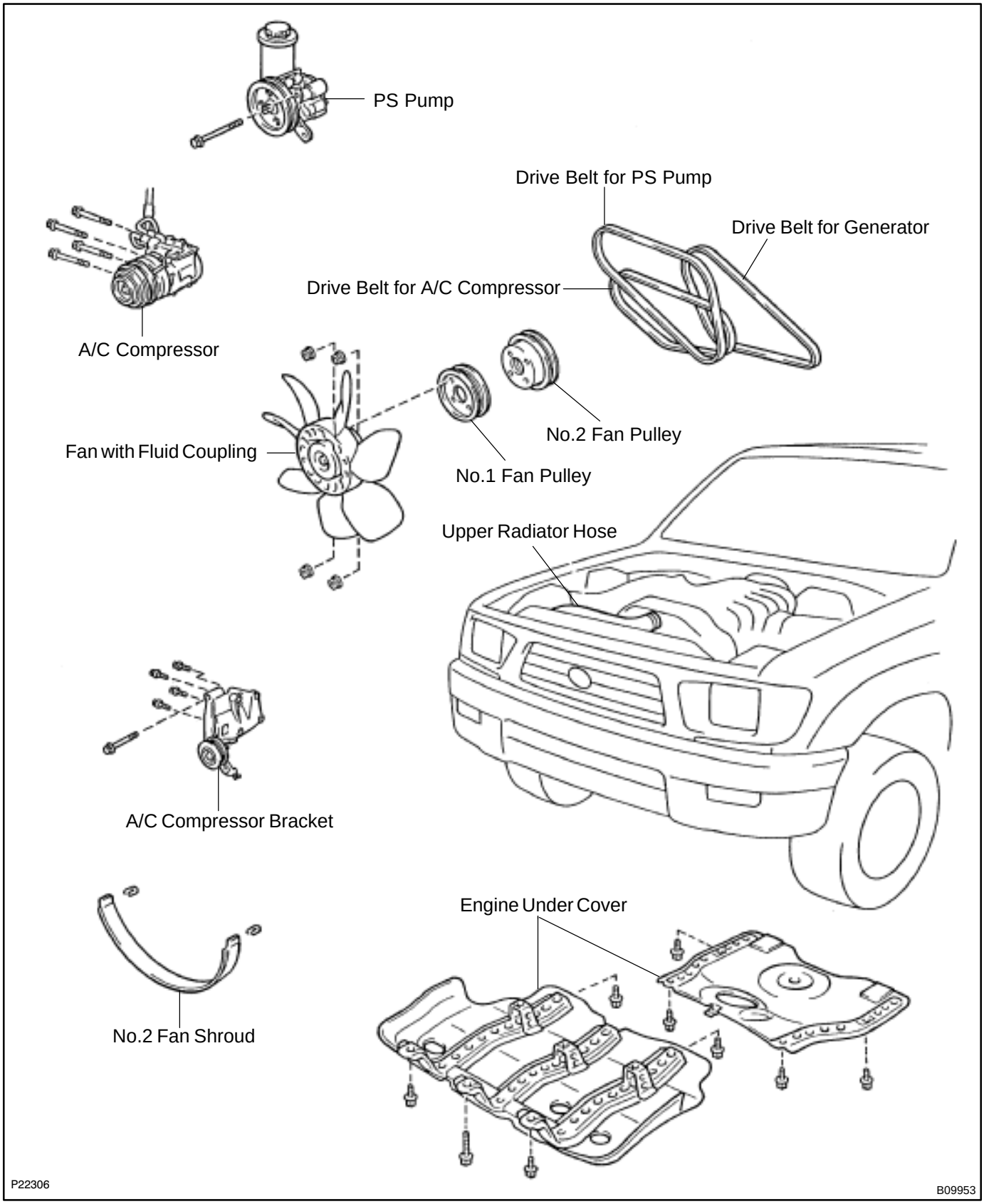

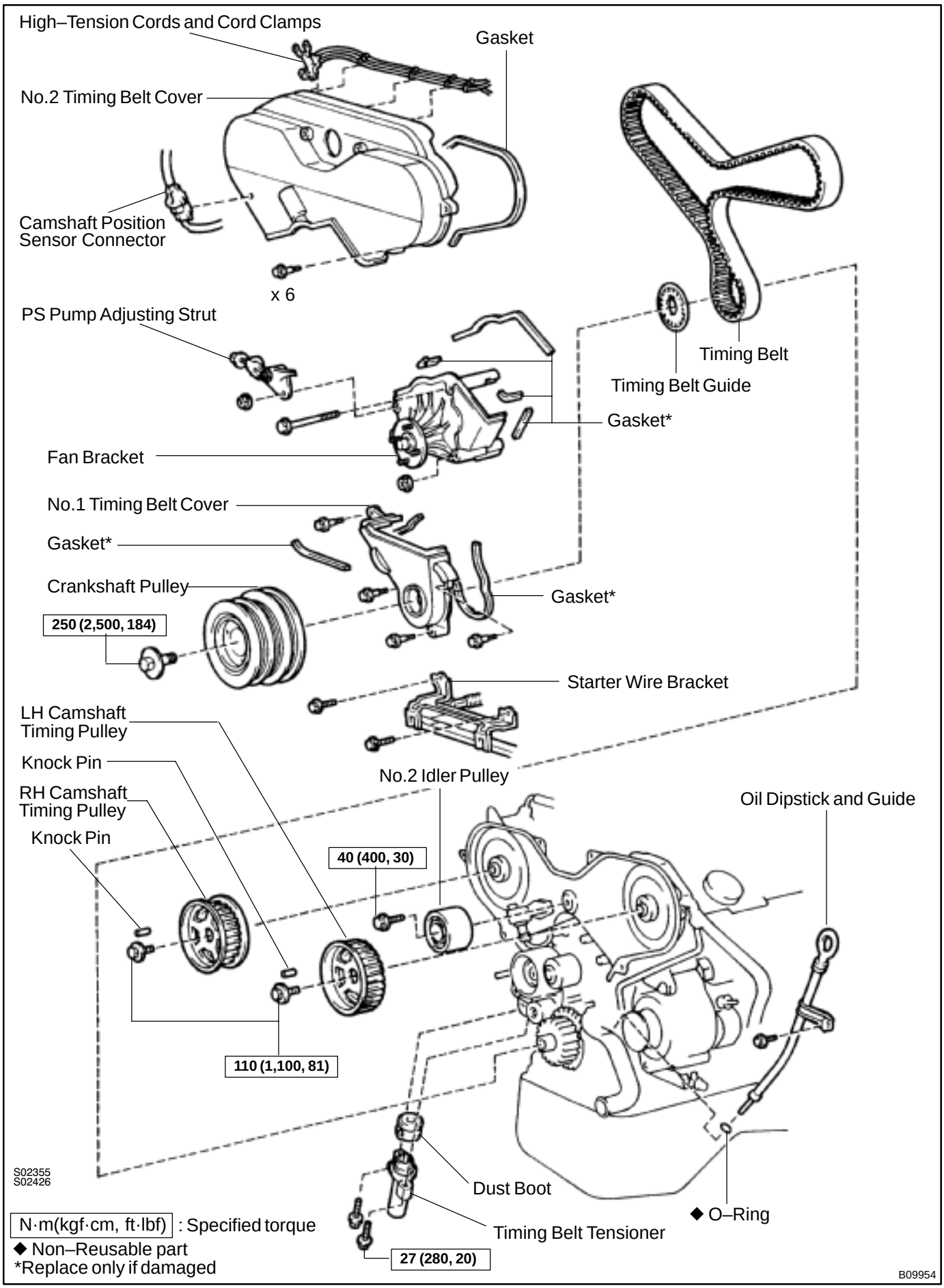
High–Tension Cords and Cord Clamps
Gasket
No.2 Timing Belt Cover
Camshaft Position Sensor Connector
x 6
PS Pump Adjusting Strut
Timing Belt
Timing Belt Guide
Gasket*
Fan Bracket
No.1 Timing Belt Cover
Gasket*
Crankshaft Pulley
Gasket*
250 (2,500, 184)
Starter Wire Bracket
LH Camshaft Timing Pulley
Knock Pin
No.2 Idler Pulley
RH Camshaft Timing Pulley
Oil Dipstick and Guide
Knock Pin
40 (400, 30)
110 (1,100, 81)
S02355
S02426
Dust Boot
◆ O–Ring
Timing Belt Tensioner
27 (280, 20)
N·m(kgf·cm, ft·lbf) : Specified torque
◆ Non–Reusable part
*Replace only if damaged
B09954

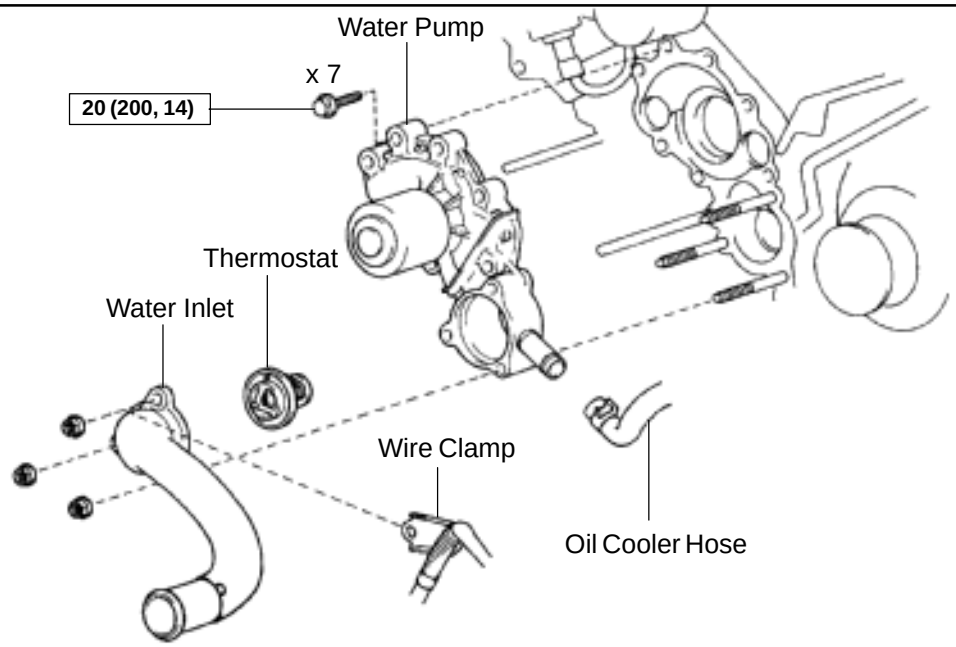

N·m(kgf·cm, ft·lbf) : Specified torque
◆ Non–Reusable part

S02351

CO026–03

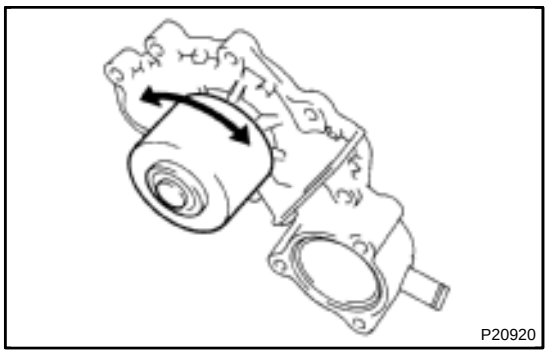
P20920

INSPECTION

1. INSPECT WATER PUMP

(a) Visually check the drain hole for coolant leakage.

If leakage is found, replace the water pump.

If engine coolant has leaked onto the timing belt, replace the timing belt.

(b) Turn the pulley, and check that the water pump bearing moves smoothly and quietly.

If necessary, replace the water pump.

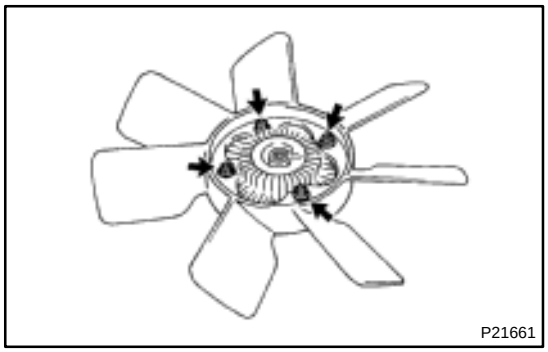
P21661

2. INSPECT FLUID COUPLING

(a) Remove the 4 nuts and fan from the fluid coupling.

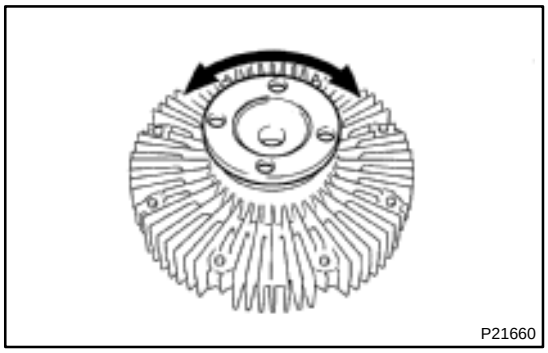
P21660

(b) Check that the fluid coupling is not damaged and that no silicon oil leaks.

If necessary, replace the fluid coupling.

(c) Reinstall the fan to the fluid coupling with the 4 nuts.

Torque: 7.4 N·m (75 kgf·cm, 65 in.·lbf)

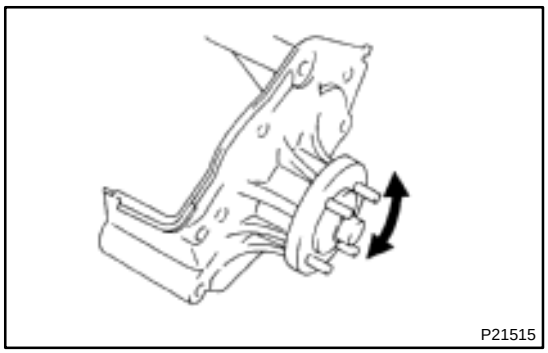
P21515

3. INSPECT FAN PULLEY BRACKET

Check the turning smoothness of the fan pulley.

If necessary, replace the pulley bracket.

4. INSPECT TIMING BELT COMPONENTS

(See page EM–17)

CO027–03

INSTALLATION

1. INSTALL WATER PUMP

(a) Remove any old packing (FIPG) material and be careful not to drop any oil on the contact surfaces of the water pump and cylinder block.

- Using a razor blade and gasket scraper, remove all the old packing (FIPG) material from the gasket surfaces and sealing groove.
- Thoroughly clean all components to remove all the loose material.
- Using a non–residue solvent, clean both sealing surfaces.

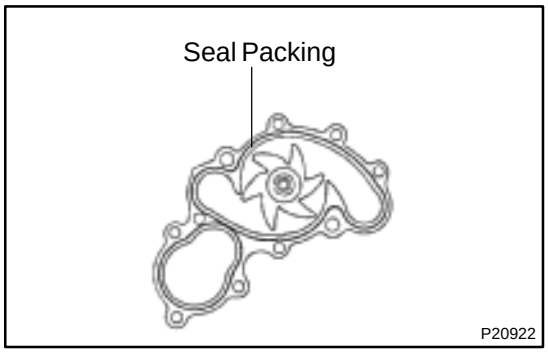

(b) Apply seal packing to the water pump groove as shown in the illustration.

Seal packing: Part No. 08826–00100 or equivalent

- Install a nozzle that has been cut to a 2 – 3 mm (0.08 – 0.12 in.) opening.
- Parts must be assembled within 5 minutes of application. Otherwise the material must be removed and reapplied.
- Immediately remove nozzle from the tube and reinstall cap.

(c) Install the water pump with the 7 bolts.

Torque: 20 N·m (200 kgf·cm, 14 ft·lbf)

2. CONNECT NO.2 OIL COOLER HOSE

3. INSTALL THERMOSTAT AND WATER INLET (See page CO–12)

4. INSTALL TIMING BELT (See page EM–19)

CO025–03

REMOVAL

1. REMOVE TIMING BELT (See page EM–13)

2. REMOVE WATER INLET AND THERMOSTAT

3. DISCONNECT NO.2 OIL COOLER HOSE FROM WATER PUMP

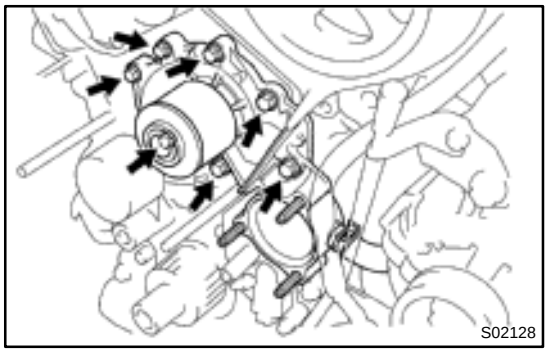

4. REMOVE WATER PUMP

(a) Remove the 7 bolts.

(b) Pry out the water pump.

DI195–03

CIRCUIT INSPECTION

DTC	11	ABS Relay Circuit

CIRCUIT DESCRIPTION

This relay supplies power to each ABS solenoid. After the ignition switch is turned ON, if the initial check is OK, the relay goes on.

DTC No.	DTC Detection Item	Trouble Area
11	Detection of any conditions from (1) through (3): (1) 3 or more solenoid valves are slowly faulty in response and simultaneously valve supply voltage is detected faulty. (2) Solenoid valve relay will not be switched OFF. (3) Valve relay is frozen is spite of its high valve relay supply voltage.	• ABS relay • Open or short in ABS relay circuit • ECU

Fail safe function:
If trouble occurs in the ABS relay circuit, the ECU cuts off current to the ABS relay and prohibits ABS control.

WIRING DIAGRAM

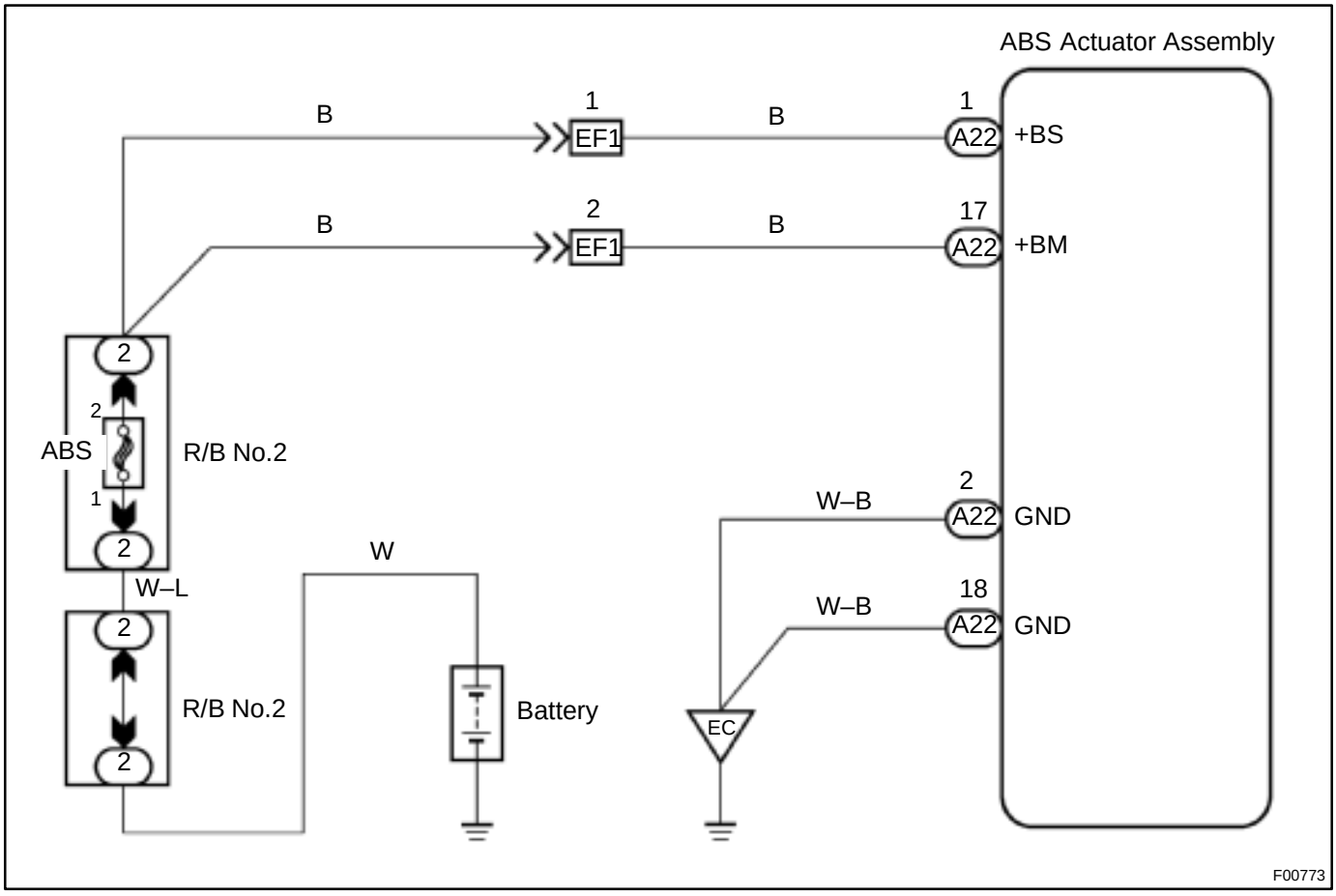

INSPECTION PROCEDURE

1	**Check voltage between terminals +BS, +BM and GND of ABS actuator connector.**

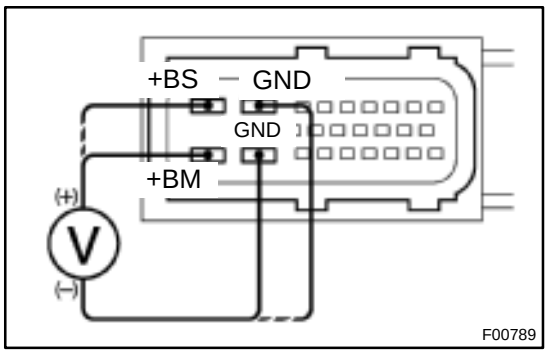

PREPARATION:

Disconnect the ABS actuator connector.

CHECK:

Measure the voltage between terminals +BS, +BM and GND of ABS actuator harness side connector.

OK:

Voltage: 10 – 14 V

NG → **Check and replace fuses.**
Check and repair harness or connector.

OK

If the same code is still output after the DTC is deleted, check the contact condition of each connection.
If the connector are normal, the ECU may be defective.

DI196–03

DTC	21	ABS Solenoid Valve Circuit

CIRCUIT DESCRIPTION

This solenoid goes on when signals are received from the ECU and controls the pressure acting on the wheel cylinders thus controlling the braking force.

DTC No.	DTC Detecting Condition	Trouble Area
21	Solenoid valve signal does not match for the check result.	• Each solenoid valve

Fail safe function:
If trouble occurs in the ABS solenoid valve circuit, the ECU cuts off current to the ABS relay and prohibits ABS control.

WIRING DIAGRAM

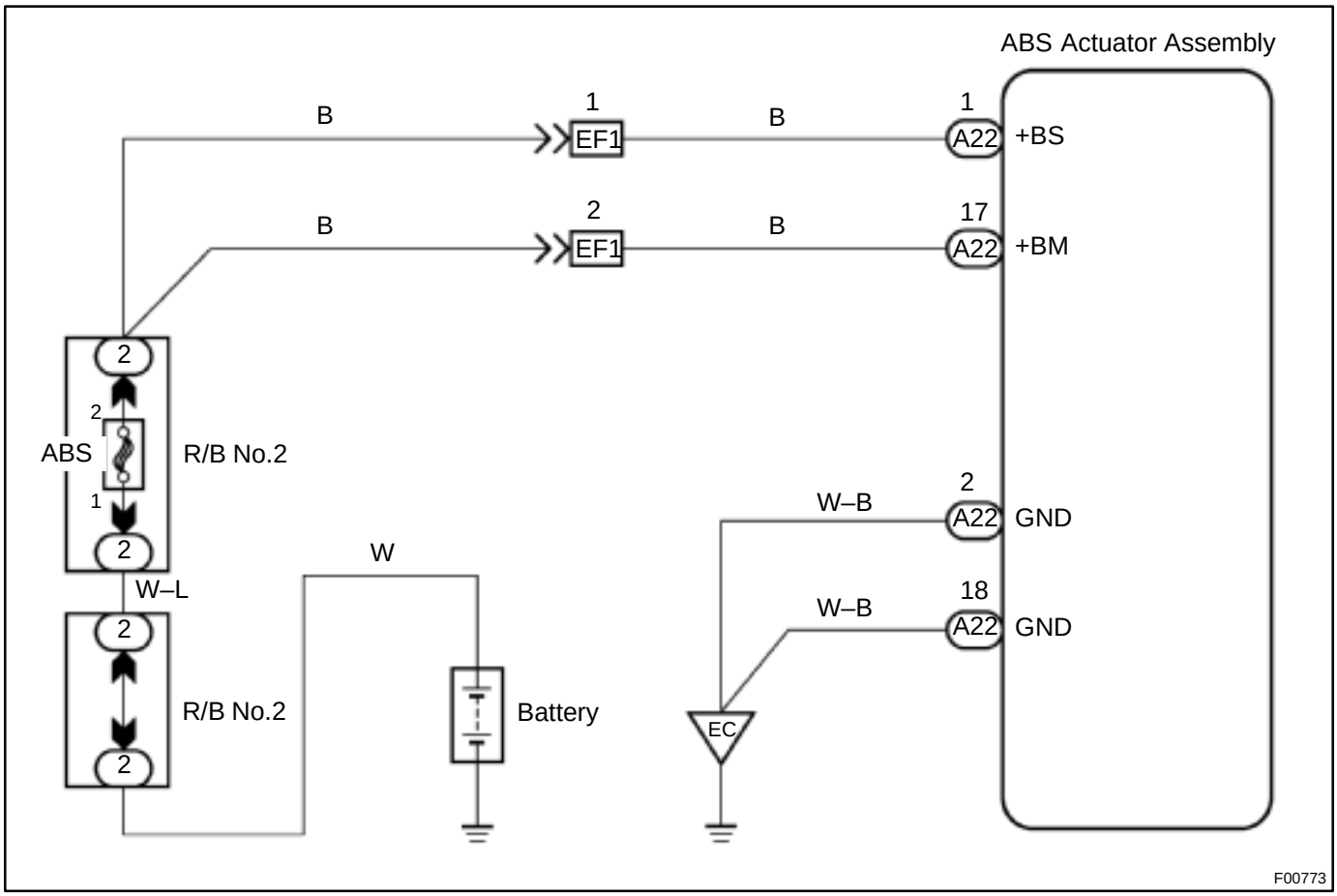

INSPECTION PROCEDURE

1	**Check the DTC once more.**

PREPARATION:

(a) Clear the DTC (See page DI–415).

(b) Turn the ignition switch OFF.

CHECK:

Turn the ignition switch ON, and check if the same DTC is stored in the memory.

NO → **No problem.**

YES

Replace the ABS ECU.

DI198–01

DTC	37	Tires of Different Size

CIRCUIT DESCRIPTION

DTC No.	DTC Detecting Condition	Trouble Area
37	Driving at more than 30 km/h (19 mph) for more than 60 seconds with 1 or 2 tires of different size.	• Tire size • ECU

INSPECTION PROCEDURE

1	Check tire size.

NG → **Replace tires so that all 4 tires are of the same size.**

OK →

Check and replace ABS ECU.

DI199–04

DTC	41	IG Power Source Circuit

CIRCUIT DESCRIPTION

This is the power source for the ECU, hence the actuators.

DTC No.	DTC Detecting Condition	Trouble Area
41	Vehicle speed is 3 km/h (1.9 mph) or more and voltage of ECU terminal IG1 remains at more than 17 V or below 9.5 V for more than 10 sec.	• Battery • IC regulator • Open or short in power source circuit • ECU

Fail safe function:
If trouble occurs in the power source circuit, the ECU cuts off current to the ABS control (solenoid) relay and prohibits ABS control.

WIRING DIAGRAM

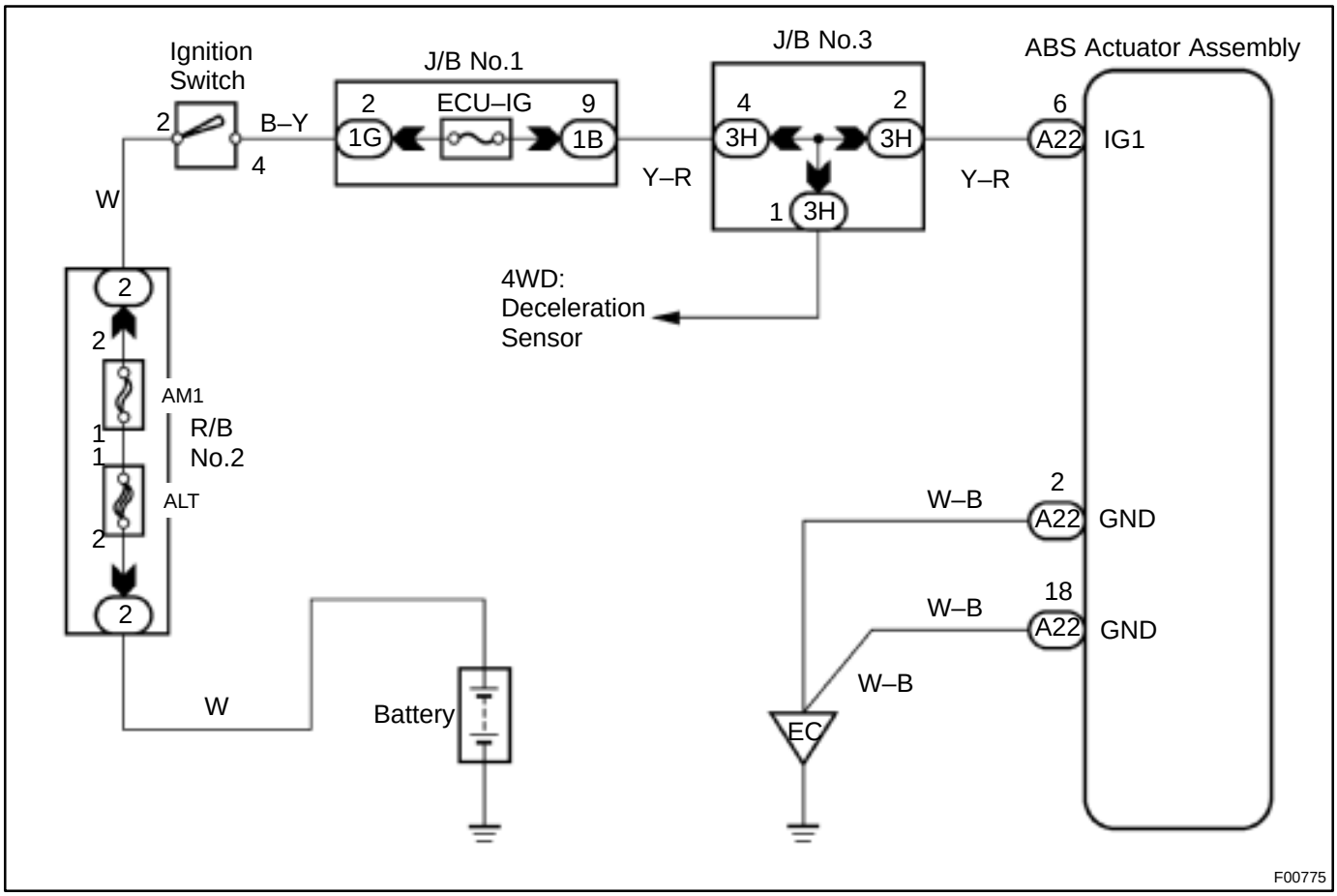

INSPECTION PROCEDURE

1	**Check battery positive voltage.**

OK:

Voltage: 10 – 14 V

NG → **Check and repair the charging system.**

OK

2	**Check voltage between terminals IG1 and GND of ABS ECU connector.**

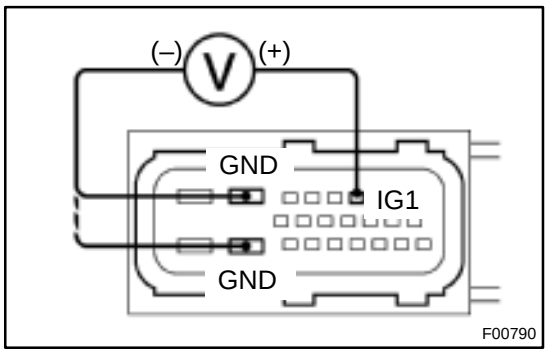

PREPARATION:

Disconnect ABS actuator connector.

CHECK:

(a) Turn the ignition switch ON.

(b) Measure voltage between terminals IG1 and GND of ABS actuator harness side connector.

OK:

Voltage: 10 – 14 V

NG → **Go to step 4.**

OK

3	**Check continuity between terminals GND of ABS ECU connector and body ground.**

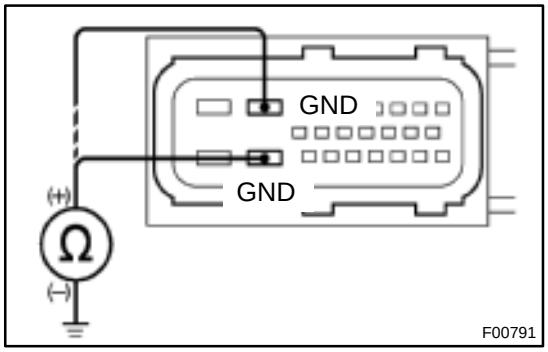

CHECK:

Measure resistance between terminals GND of ABS actuator harness side connector and body ground.

OK:

Resistance: 1 Ω or less

NG → **Repair or replace harness or connector.**

OK

4	Check ECU–IG fuse.

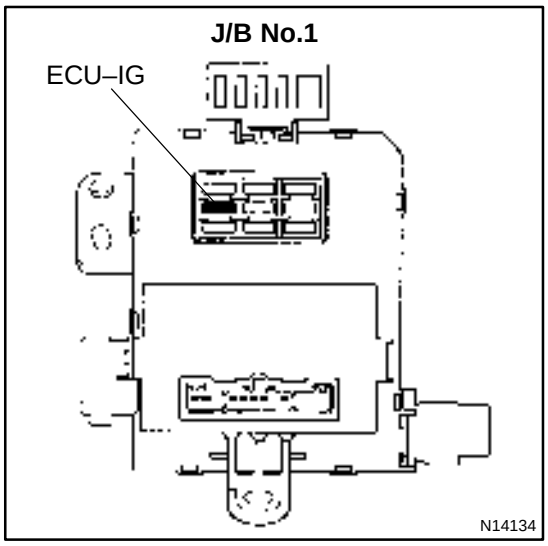

PREPARATION:
Remove ECU–IG fuse from J/B No.1.
CHECK:
Check continuity of ECU–IG fuse.
OK:
Continuity

NG → **Check for short in all the harness and components connected to ECU–IG fuse (See attached wiring diagram).**

OK

Check and replace the ABS ECU.

DI19A–03

DTC	44	Deceleration Sensor Circuit

CIRCUIT DESCRIPTION

This sensor detects deceleration on the vehicle. The sensor signal is used in ABS control. If the sensor functions abnormally. The ECU cuts off current to the ABS control (solenoid) relay and prohibit ABS control.

DTC No.	DTC Detecting Condition	Trouble Area
44	Either of the following (1) or (2) is detected: (1) An open or short is detected in circuit GS1 or GS2 or GST. (2) Futher plausibility criterions related to wheel speeds and deceleration sensor behavior.	• Deceleration sensor • Open or short in deceleration sensor circuit • ECU

WIRING DIAGRAM

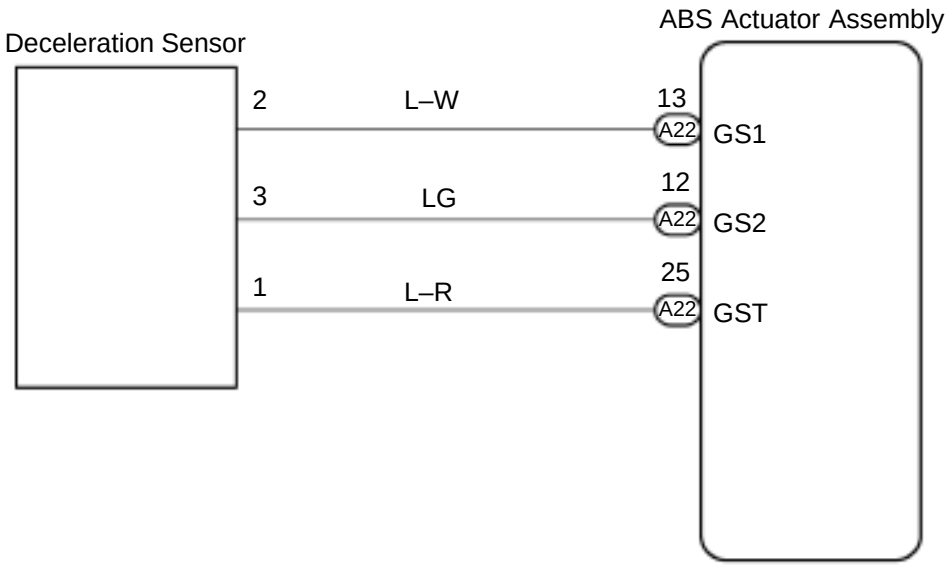

F00776

INSPECTION PROCEDURE

1	**Check for open and short in harness and connector between Deceleration sensor and ECU (See page IN–28).**

NG → **Repair or replace harness or connector.**

OK

2	Check the deceleration sensor.

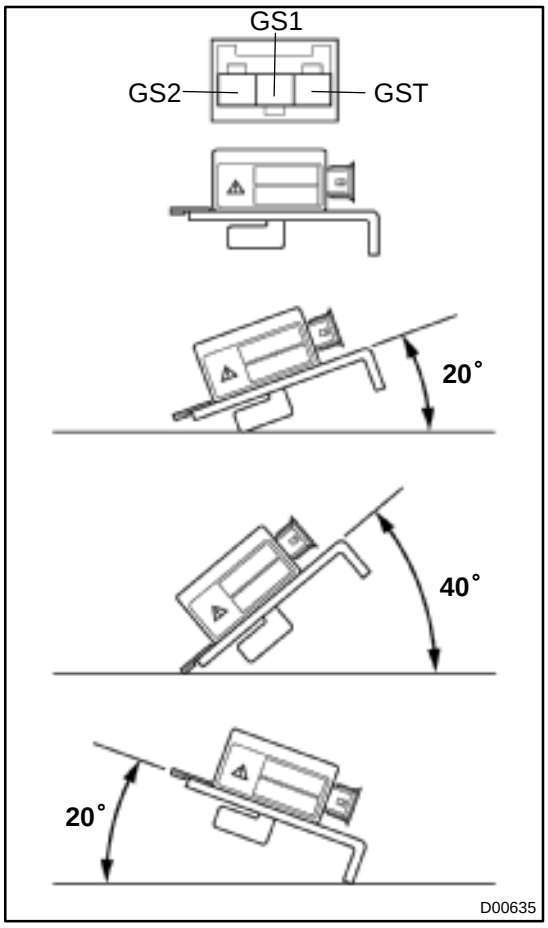

PREPARATION:

Remove the deceleration sensor.

CHECK:

(a) Measure voltage between terminals GS1 and GST.

(b) Measure voltage between terminals GS2 and GST.

OK:

Sensor angle: 0°

Terminals	Resistance
GS1 – GST	Continuity
GS2 – GST	Continuity

Sensor angle: 20° on the right side

Terminals	Resistance
GS1 – GST	No continuity
GS2 – GST	Continuity

Sensor angle: 40° on the right side

Terminals	Resistance
GS1 – GST	No continuity
GS2 – GST	No continuity

Sensor angle: 20° on the left side

Terminals	Resistance
GS1 – GST	Continuity
GS2 – GST	No continuity

NG → **Replace the deceleration sensor.**

OK

Replace the ABS ECU.

DI19B–03

DTC	48	Rear Differential Lock Circuit (w/ Rear Differential Lock)

CIRCUIT DESCRIPTION

DTC No.	DTC Detecting Condition	Trouble Area
48	Open or short circuit in rear differential lock circuit. Rear differential is locking.	• Rear differential lock • ECU

WIRING DIAGRAM

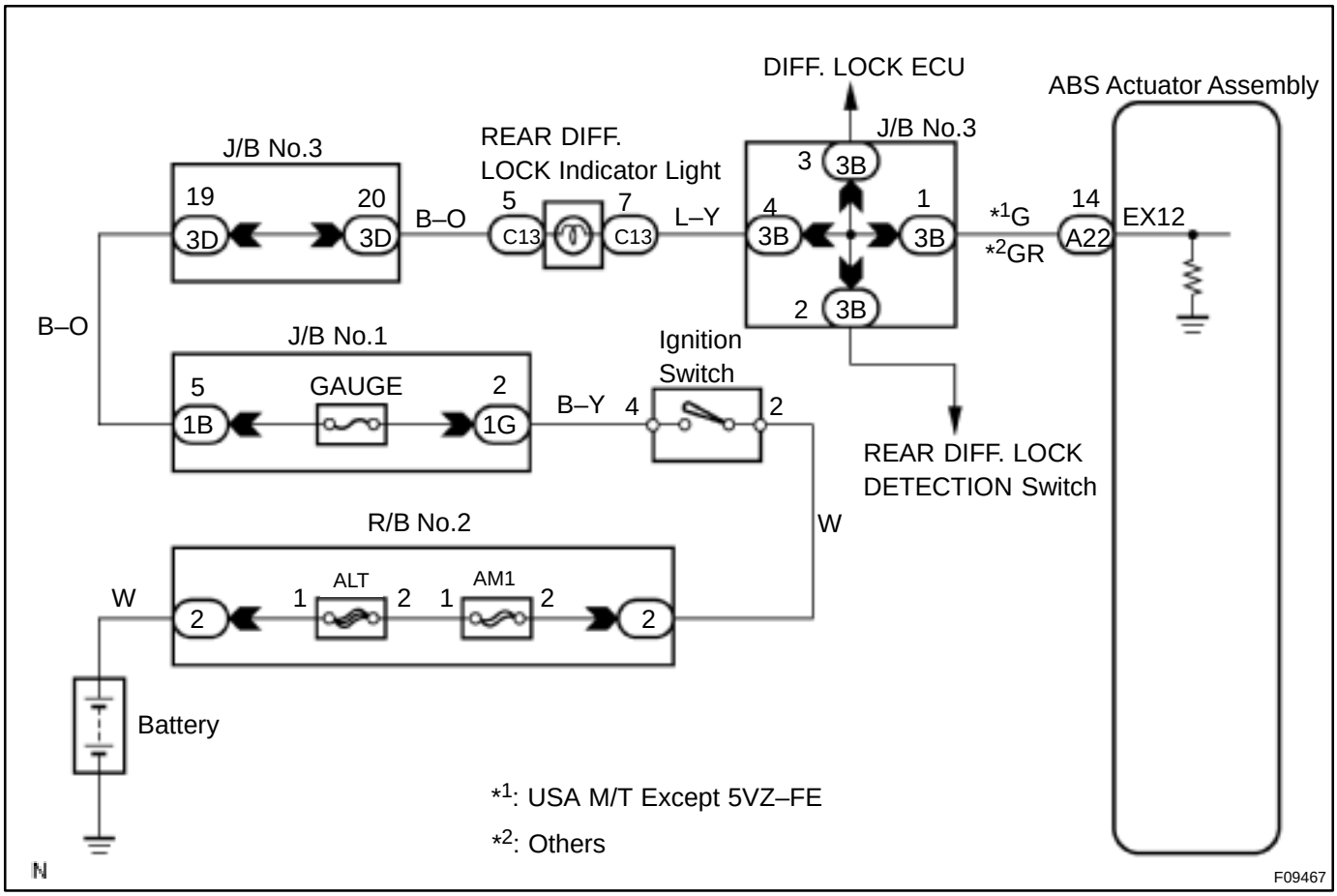

INSPECTION PROCEDURE

HINT:
Rear differential lock switch is OFF.

1	**Check the rear differential lock is free (See page SA–202).**

NG → **Repair the rear differential lock system.**

OK

2	**Is DTC output?**

Check DTC on page DI–415.

NO → **Normal.**

YES

3	**Check that REAR DIFF. LOCK indicator light does not go off.**

NO → **Go to step NO TAG.**

YES

4	**Check that bulb for REAR DIFF. LOCK indicator light is not burnt out.**

YES → **Replace indicator light.**

NO

5	**Check for open in harness and connector between battery and REAR DIFF. LOCK indicator light, REAR DIFF. LOCK indicator light and ABS ECU (See page IN–28).**

NG → **Repair or replace harness or connector.**

OK

6	**Check for short in harness and connector between REAR DIFF. LOCK indicator light and ABS ECU (See page IN–28).**

NG → **Repair or replace harness or connector.**

OK

Check and replace ABS ECU.

DI19C–04

DTC	49	Stop Light Switch Circuit

CIRCUIT DESCRIPTION

DTC No.	Detection Item	Trouble Area
49	This stop light switch senses whether the brake pedal is depressed or released, and sends the signal to the ECU.	• Stop light switch • ECU

WIRING DIAGRAM

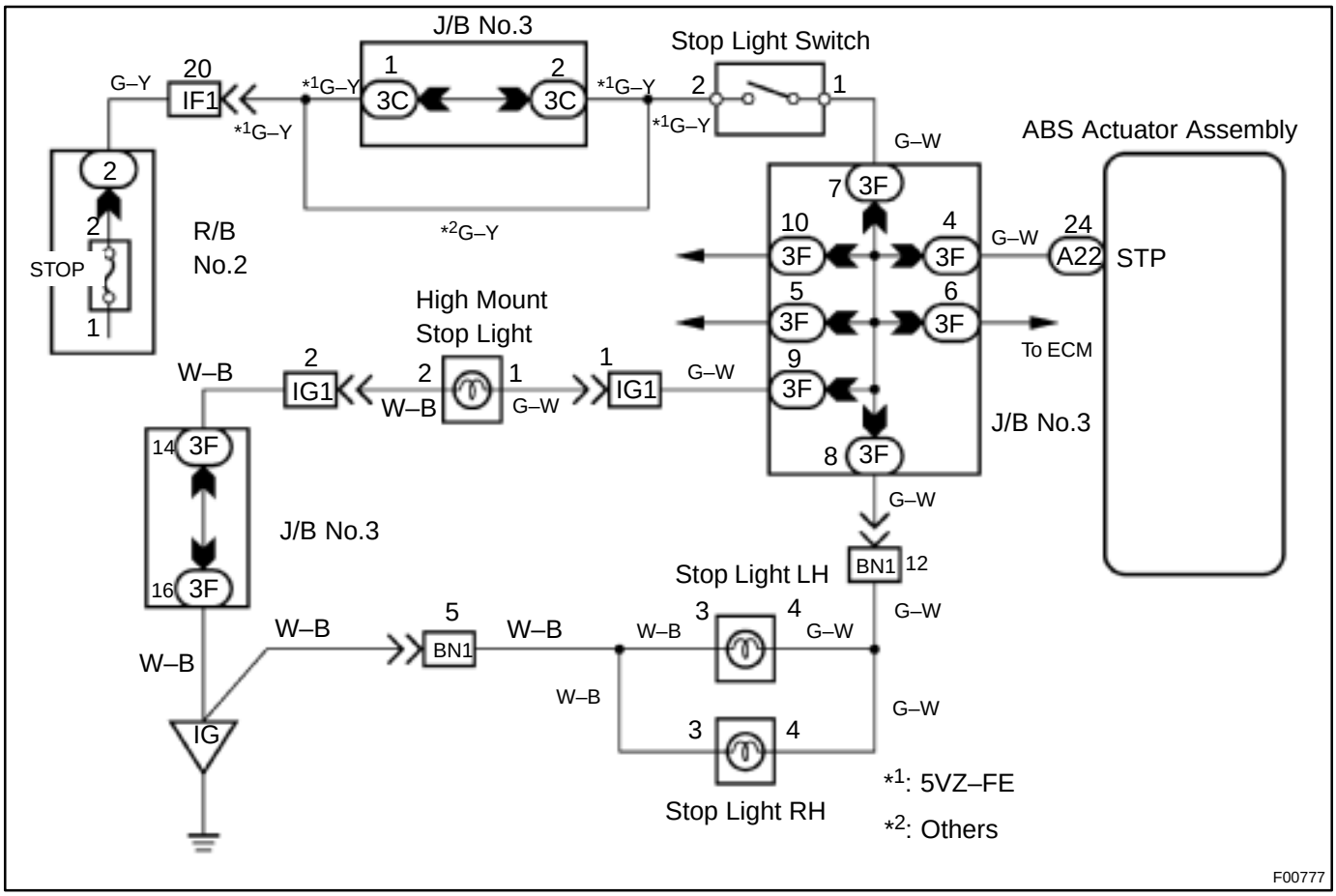

INSPECTION PROCEDURE

1	Check operation of stop light.

CHECK:

Check that stop light lights up when brake pedal is depressed and turns off when brake pedal is released.

NG	Repair stop light circuit (See page BE–2).

OK

2	**Check voltage between terminal STP of ABS ECU and body ground.**

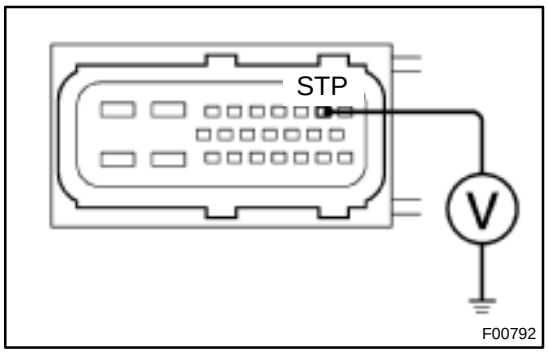

PREPARATION:
Disconnect ABS actuator connector.
CHECK:
Measure voltage between terminal STP of ABS actuator harness side connector and body ground when brake pedal is depressed.
OK:
Voltage: 8 – 14 V

OK → **Proceed to next circuit inspection shown on problem symptoms table (See page DI–423).**

NG

3	**Check for open in harness and connector between ABS actuator and stop light switch (See page IN–28).**

NG → **Repair or replace harness or connector.**

OK

Check and replace ABS ECU.

DI19D–03

DTC	51	ABS Pump Motor Lock

CIRCUIT DESCRIPTION

DTC No.	DTC Detecting Condition	Trouble Area
51	Pump motor is not operating normally during initial check.	• ABS pump motor

Fail safe function:
If trouble occurs in the ABS pump motor, the ECU cuts off current to the ABS relay and prohibits ABS control.

WIRING DIAGRAM

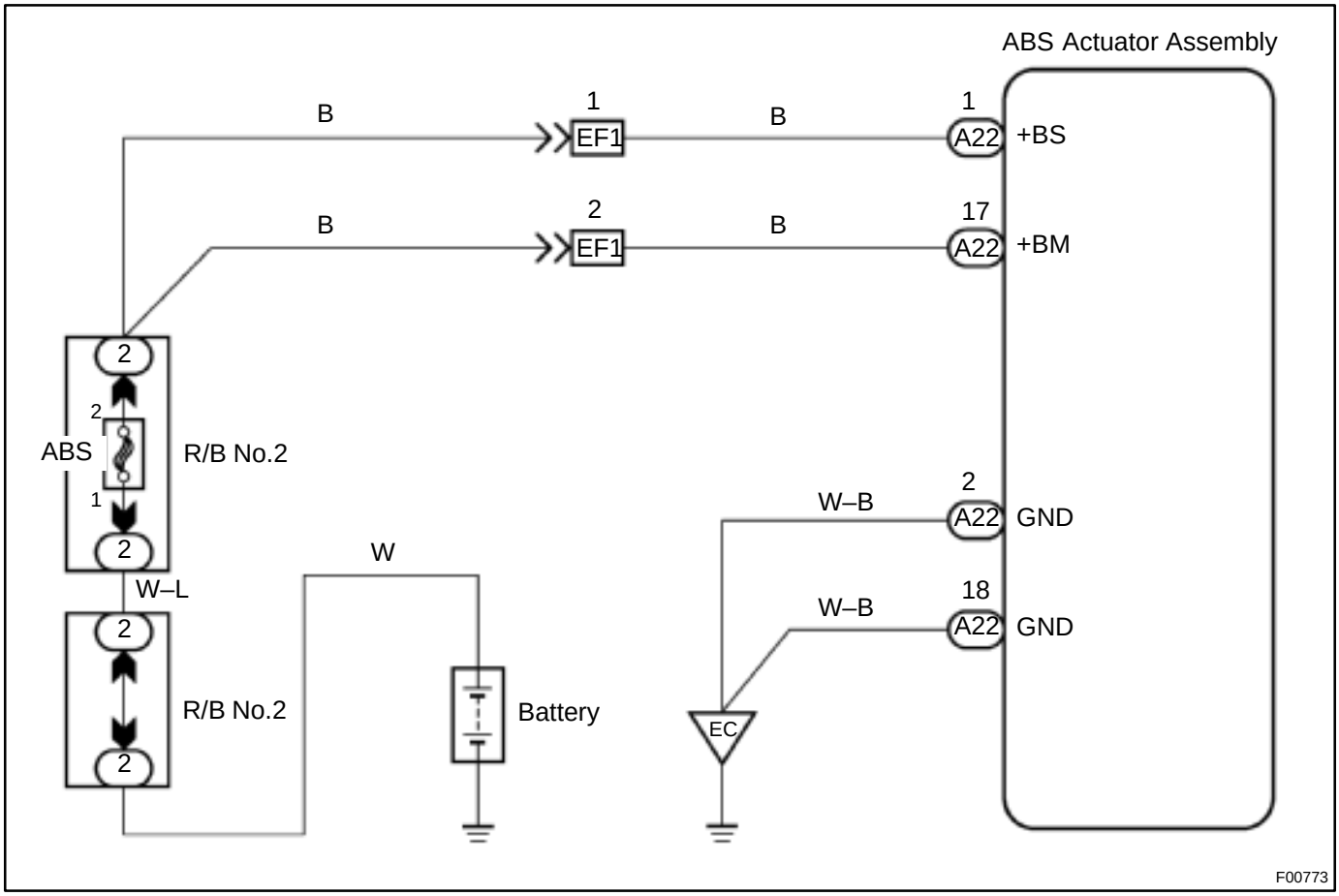

DI197–03

DTC	31, 32, 33, 34	Speed Sensor Circuit

CIRCUIT DESCRIPTION

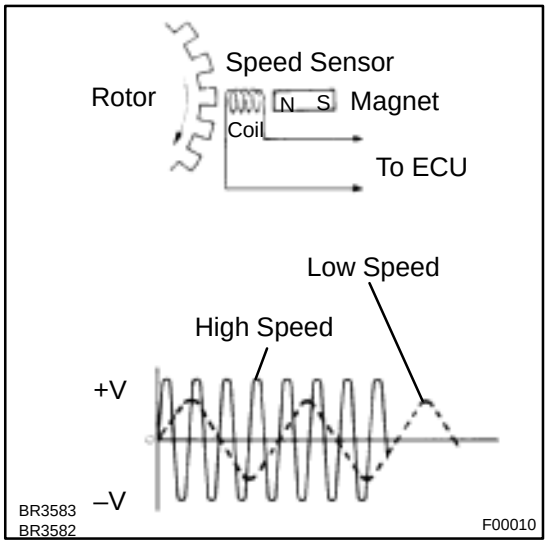

The speed sensor detects wheel speed and sends the appropriate signals to the ECU. These signals are used to control the ABS system. The front and rear rotors each have 48 serrations.

When the rotors rotate, the magnetic field emitted by the permanent magnet in the speed sensor generates an AC voltage. Since the frequency of this AC voltage changes in direct proportion to the speed of the rotor, the frequency is used by the ECU to detect the speed of each wheel.

DTC No.	DTC Detecting Condition	Trouble Area
31, 32, 33, 34	Detection of any of conditions (1) through (3): (1) At vehicle speed of 10 km/h (6 mph) or more, pulses are not input for 15 sec. (2) Momentary interruption of the speed sensor signal occurs at least 7 times in the time between switching the ignition switch ON and switching it OFF. (3) Abnormal fluctuation of speed sensor signals with the vehicle speed 20 km/h (12 mph) or more. (4) An open is detected in the speed sensor circuit for 0.6 sec.	• Right front, left front, right rear, left rear speed sensor • Open or short in each speed sensor circuit • ECU

HINT:

DTC No. 31 is for the right front speed sensor.

DTC No. 32 is for the left front speed sensor.

DTC No. 33 is for the right rear speed sensor.

DTC No. 34 is for the left rear speed sensor.

Fail safe function:

If trouble occurs in the speed sensor circuit, the ECU cuts off current to the ABS relay and prohibits ABS control.

WIRING DIAGRAM

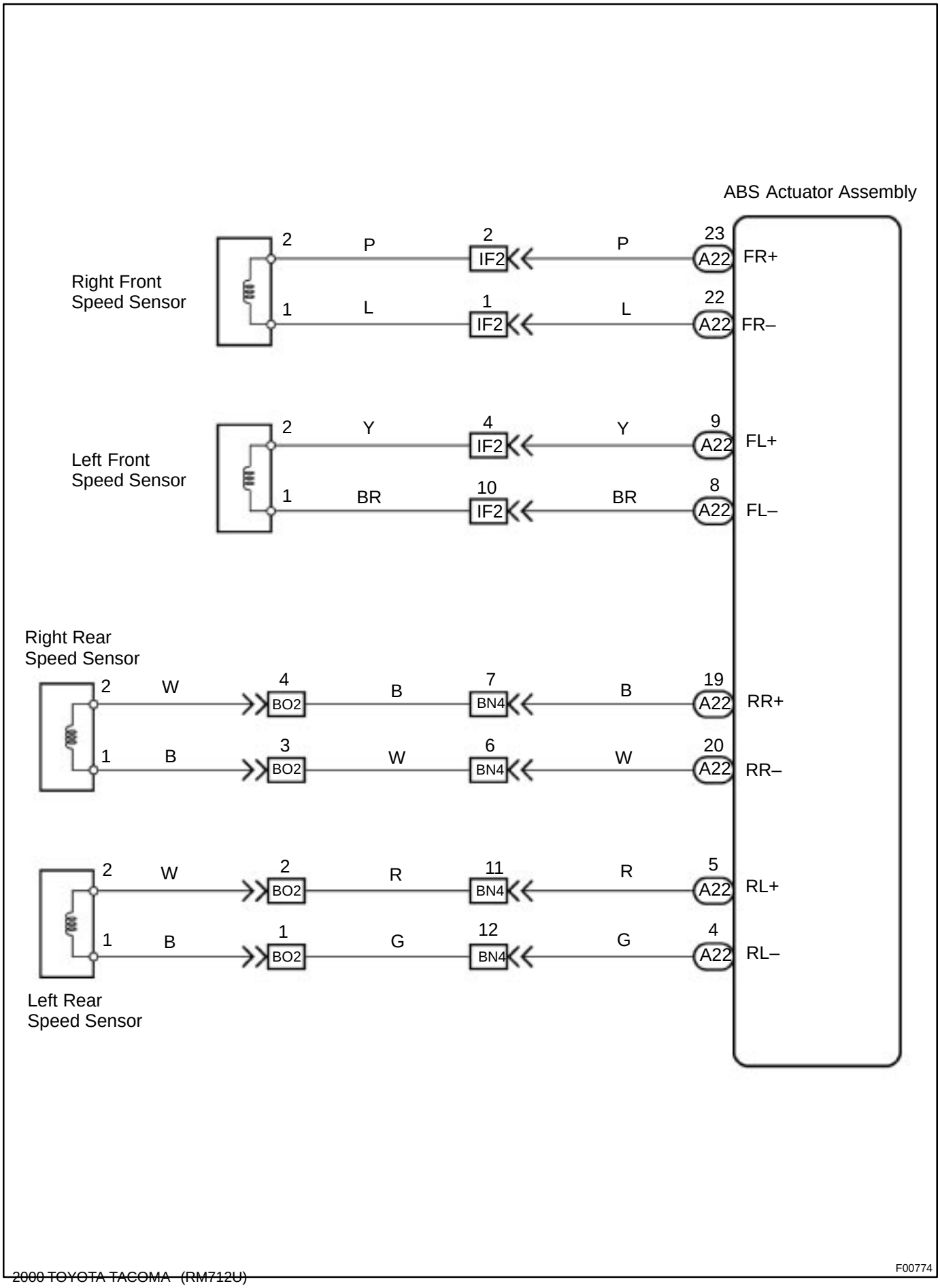

F00774

INSPECTION PROCEDURE

1	**Check speed sensor**

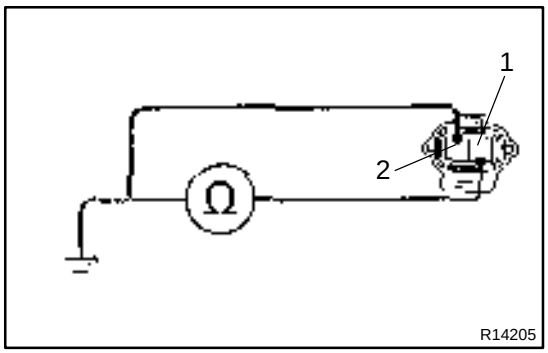

FRONT SPEED SENSOR

PREPARATION:

Disconnect speed sensor connector.

CHECK:

Measure resistance between terminals 1 and 2 of speed sensor connector.

OK:

Resistance:
2WD: 0.9 – 1.3 kΩ
4WD: 1.4 – 1.8 kΩ

CHECK:

Measure resistance between terminals 1 and 2 of speed sensor connector and body ground.

OK:

Resistance: 1 MΩ or higher

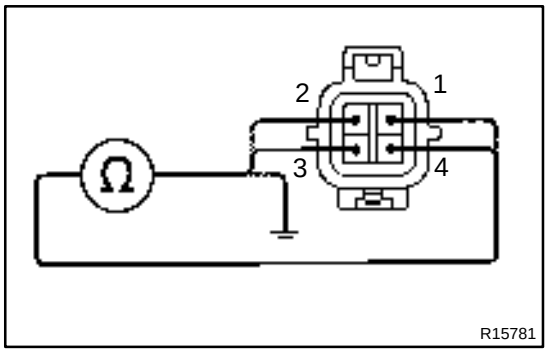

REAR SPEED SENSOR

PREPARATION:

Disconnect speed sensor connector.

CHECK:

Measure resistance between terminals 1, 2, 3 and 4 of speed sensor connector.

OK:

Resistance: 0.9 – 1.3 kΩ

CHECK:

Measure resistance between terminals 1, 2, 3 and 4 of speed sensor connector and body ground.

OK:

Resistance: 1 MΩ or higher

NG → **Replace the speed sensor.**

NOTICE:

Check the speed sensor signal last (See page DI–415).

OK

2	**Check for open and short in harness and connector between each speed sensor and ECU (See page IN–28).**

NG → **Repair or replace harness or connector.**

OK

3	**Check speed sensor and sensor rotor serrations.**

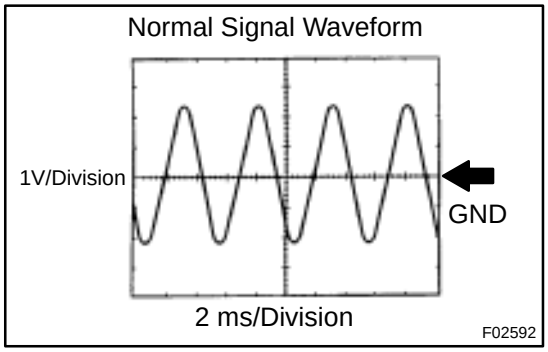

REFERENCE: INSPECTION USING OSCILLOSCOPE

PREPARATION:

(a) Disconnect ABS actuator connector.

(b) Connect the oscilloscope to the terminals FR+ and FR–, FL+ and FL–, RR+ and RR–, or RL+ and RL–.

CHECK:

Drive the vehicle at 30 km/h (19 mph), and check the signal waveform.

OK → **Replace speed sensor.**

NG

4	Check sensor rotor and sensor installation

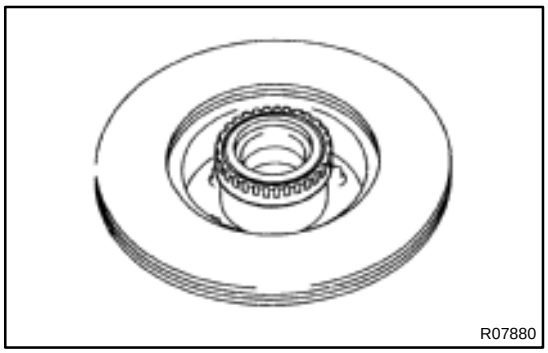
R07880

FRONT SENSOR ROTOR

PREPARATION:

Remove axle hub (See page SA–15 or SA–24).

CHECK:

Check sensor rotor serrations.

OK:

No scratches or missing teeth.

CHECK:

Check the sensor tip.

OK:

No scratches or foreign objects on the sensor tip.

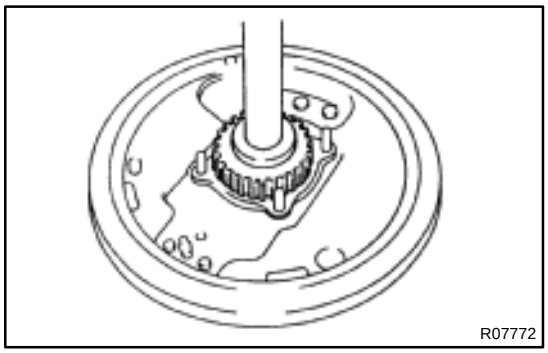
R07772

REAR SENSOR ROTOR

PREPARATION:

Remove the axle shaft (See page SA–133).

CHECK:

Check the sensor rotor serrations.

OK:

No scratches or missing teeth.

CHECK:

Check the sensor tip.

OK:

No scratches or foreign objects on the sensor tip.

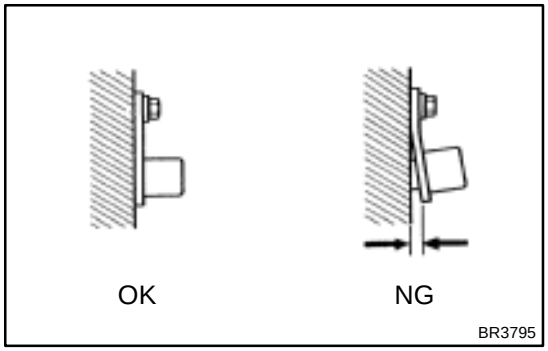

BR3795

CHECK:

Check the speed sensor installation.

OK:

The installation bolt is tightened properly and there is no clearance between the sensor and steering knuckle or rear axle carrier.

NG → **Replace speed sensor or rotor.**

NOTICE:

Check the speed sensor signal last (See page DI–415).

OK

Check and replace ABS ECU.

DI19E–03

ABS Warning Light Circuit

CIRCUIT DESCRIPTION

If the ECU detects trouble, it lights the ABS warning light while at the same time prohibiting ABS control. At this time, the ECU records a DTC in memory.
After removing the short pin of the DLC1, connect terminals Tc and E_1 of the DLC1 to make the ABS warning light blink and output the DTC.

WIRING DIAGRAM

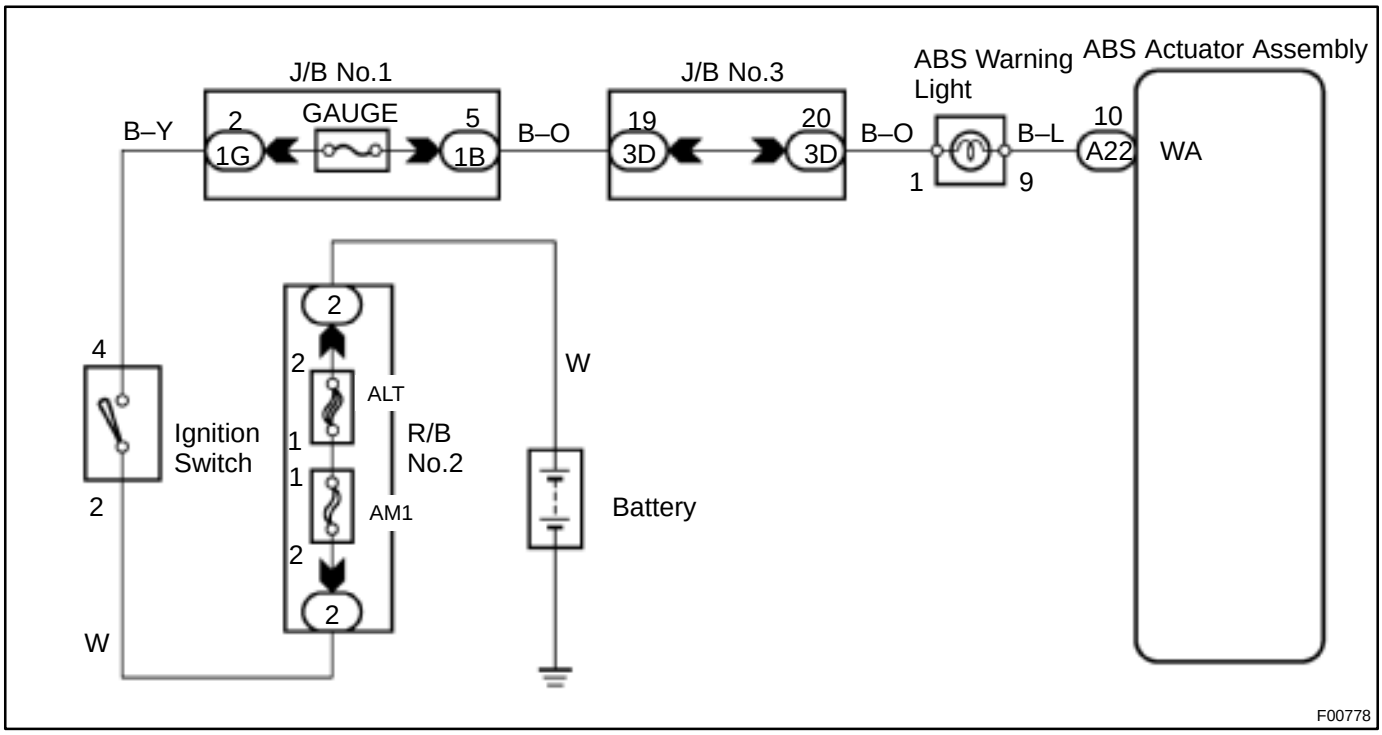

INSPECTION PROCEDURE

Troubleshooting in accordance with the chart below for each trouble symptom.

ABS warning light does not light up	Go to step 1
ABS warning light remains on	Go to step 2

1	**Check ABS warning light.**

See Combination Meter Troubleshooting on page BE–2.

NG → **Repair bulb or combination meter assembly.**

OK

Check for open in harness and connector between GAUGE fuse and ABS ECU (See page IN–28).

2	**Is DTC output?**

Check DTC on page DI–415.

YES → **Repair circuit indicated by the code output.**

NO

3	**Check for short in harness and connector between GAUGE fuse and ABS ECU (See page IN–28).**

NG → **Repair or replace harness or connector.**

OK

Check and repair ABS ECU.

DI03P–02

DTC	Always ON	ABS ECU Malfunction

CIRCUIT DESCRIPTION

DTC No.	DTC Detecting Condition	Trouble Area
Always ON	ABS ECU internal malfunction is detected.	• ECU • Battery

Fail safe function:
If trouble occurs in the power source circuit, the ECU cuts off current to the ABS solenoid relay and prohibits ABS control.

INSPECTION PROCEDURE

1	**Is DTC output?**

Check DTC on page DI–415.

YES → **Repair circuit indicated by the code output.**

NO

2	**Is normal code displayed?**

YES → **Check ABS solenoid relay. Check for short in harness and connector between ABS solenoid relay and DLC1 (See page IN–28).**

NO

3	**Is ABS warning light go off?**

YES → **Check for open or short in harness and connector between ECU–IG fuse and ABS ECU (See page IN–28).**

NO

4	**Check battery positive voltage.**

PREPARATION:
Start the engine.
CHECK:
Check the battery positive voltage.
OK:
Voltage: 10 – 14 V

NG → **Check and repair the charging system.**

OK

5	**Check ABS warning light.**

PREPARATION:
(a) Turn the ignition switch OFF.
(b) Disconnect the connector from the ABS ECU.
(c) Turn the ignition switch ON.
CHECK:
Check the ABS warning light goes off.

OK → **Check and replace ABS ECU.**

NG

Check for short in harness and connector between ABS warning light, DLC1, DLC2, and ABS ECU (See page IN–28).

DI19F–04

Tc Terminal Circuit

CIRCUIT DESCRIPTION

Connecting terminals Tc and E_1 of the DLC1 causes the ECU to display the DTC by flashing the ABS warning light.

WIRING DIAGRAM

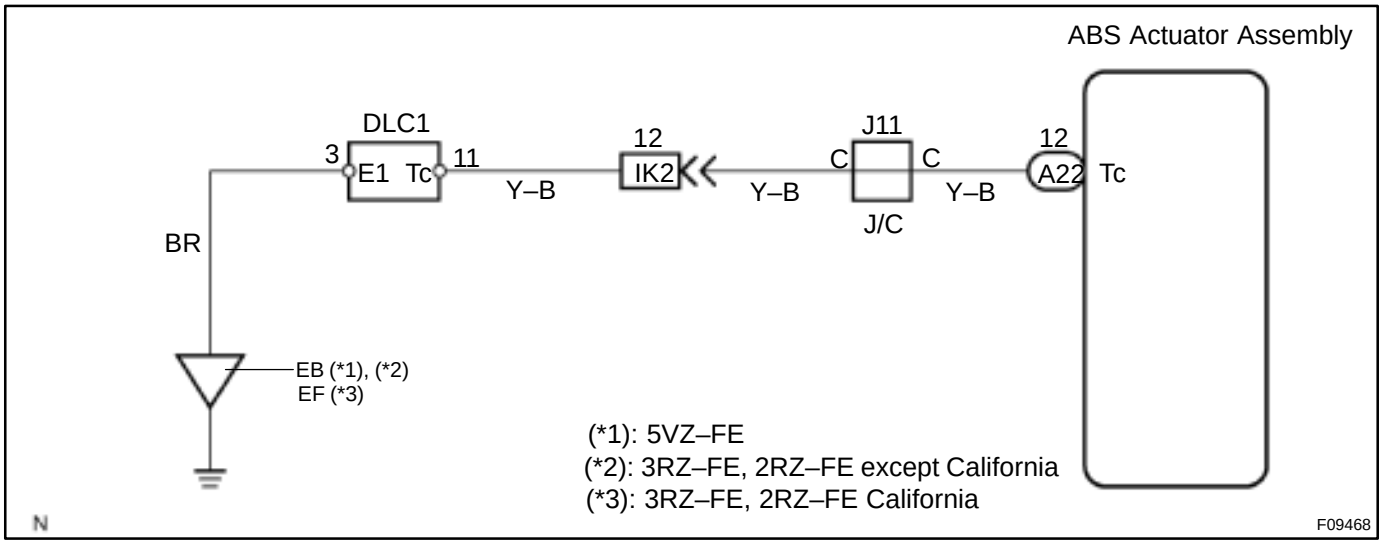

INSPECTION PROCEDURE

1	**Check voltage between terminals Tc and E_1 of DLC1.**

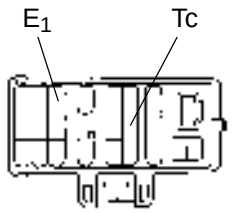

CHECK:

(a) Turn the ignition switch ON.

(b) Measure voltage between terminals Tc and E_1 of DLC1.

OK:

Voltage: 10 – 14 V

OK

If ABS warning light does not blink even after Tc and E_1 are connected, the ECU may be defective.

NG

2	**Check for open and short in harness and connector between ABS actuator and DLC1, DLC1 and body ground (See page IN–28).**

NG → **Repair or replace harness or connector.**

OK

Check and replace ABS ECU.

DI19G–04

Ts Terminal Circuit

CIRCUIT DESCRIPTION

The sensor check circuit detects abnormalities in the speed sensor signal which cannot be detected with the DTC check.
Connecting terminals Ts and E_1 of the DLC1 in the engine compartment starts the check.

WIRING DIAGRAM

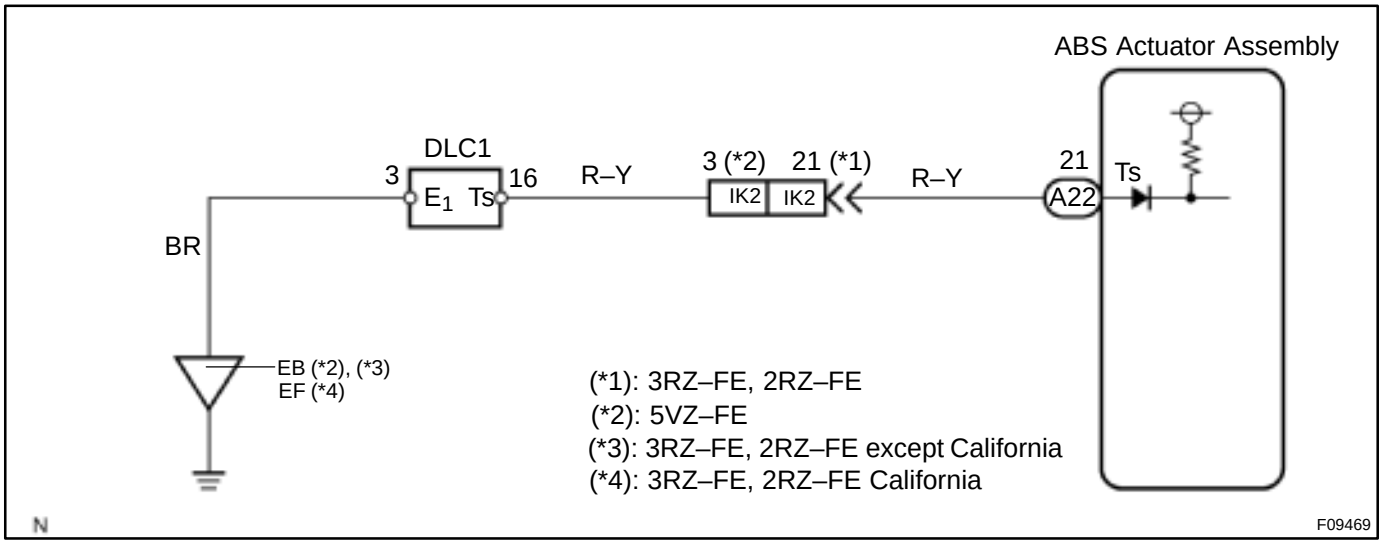

INSPECTION PROCEDURE

1	**Check voltage between terminals Ts and E_1 of DLC1.**

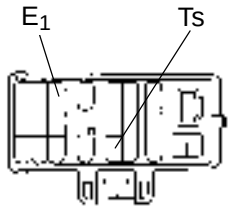

DLC1

F00007

CHECK:

(a) Turn the ignition switch ON.

(b) Measure voltage between terminals Ts and E_1 of DLC1.

OK:

Voltage: 10 – 14 V

OK → **If ABS warning light does not blink even after Ts and E_1 are connected, the ECU may be defective.**

NG

2	**Check for open and short in harness and connector between ABS actuator and DLC1, DLC1 and body ground (See page IN–28).**

NG → **Repair or replace harness or connector.**

OK

Check and replace ABS ECU.

DI03U–02

CUSTOMER PROBLEM ANALYSIS CHECK

ABS Check Sheet

Inspector's name :

Customer's Name		**Registration No.**	
		Registration Year	/ /
		Frame No.	
Date Vehicle Brought In	/ /	**Odometer Reading**	km miles

Date Problem First Occurred	/ /
Frequency Problem Occurs	☐ Continuous ☐ Intermittent (times a day)

Symptoms	☐ ABS does not operate.	
	☐ ABS does not operate efficiently.	
	ABS Warning Light Abnormal	☐ Remains ON ☐ Does not Light Up

DTC Check	**1st Time**	☐ Normal Code ☐ Malfunction Code (Code)
	2nd Time	☐ Normal Code ☐ Malfunction Code (Code)

DI03W–02

DIAGNOSTIC TROUBLE CODE CHART

HINT:

- Using SST 09843 –18020, connect the terminals Tc and E_1.
- If a malfunction code is displayed during the DTC check, check the circuit listed that the code. For details of each code, turn to the page referred to under the ”See page” for respective ”DTC No.” in the DTC chart.

DTC No. (See Page)	Detection Item	Trouble Area
11 (DI–424)	ABS relay faulty	• ABS relay • Open or short in ABS relay circuit • ECU
21 (DI–426)	ABS solenoid valves faulty	• Each solenoid valve
31 (DI–428)	Right front wheel speed sensor signal malfunction	• Right front, left front, right rear and left rear speed sensor • Open or short each speed sensor circuit • ECU
32 (DI–428)	Left front wheel speed sensor signal malfunction	
33 (DI–428)	Right rear wheel speed sensor signal malfunction	
34 (DI–428)	Left rear wheel speed sensor signal malfunction	
37 (DI–433)	Some tire is different size from the other tires	• Tire size • ECU
41 (DI–434)	Low battery positive voltage or abnormally high battery positive voltage	• Battery • IC regulator • Open or short in power source circuit • ECU
44*1 (DI–437)	Open or short in deceleration sensor circuit	• Deceleration sensor • Open or short in deceleration sensor circuit • ECU
48*2 (DI–439)	Open or short in circuit in rear differential lock circuit Rear differential is locking	• Rear differential lock • ECU
49 (DI–442)	Open or short circuit in stop light switch circuit	• Stop light switch • ECU
51 (DI–444)	Pump motor is locked Open in pump motor ground	• ABS pump motor
Always ON (DI–445)	Malfunction in ECU	• ECU • Battery

*1: 4WD models

*2: w/ Rear differential lock

ANTI–LOCK BRAKE SYSTEM

HOW TO PROCEED WITH TROUBLESHOOTING

DI051–02

Troubleshooting in accordance with the procedure on the following pages.

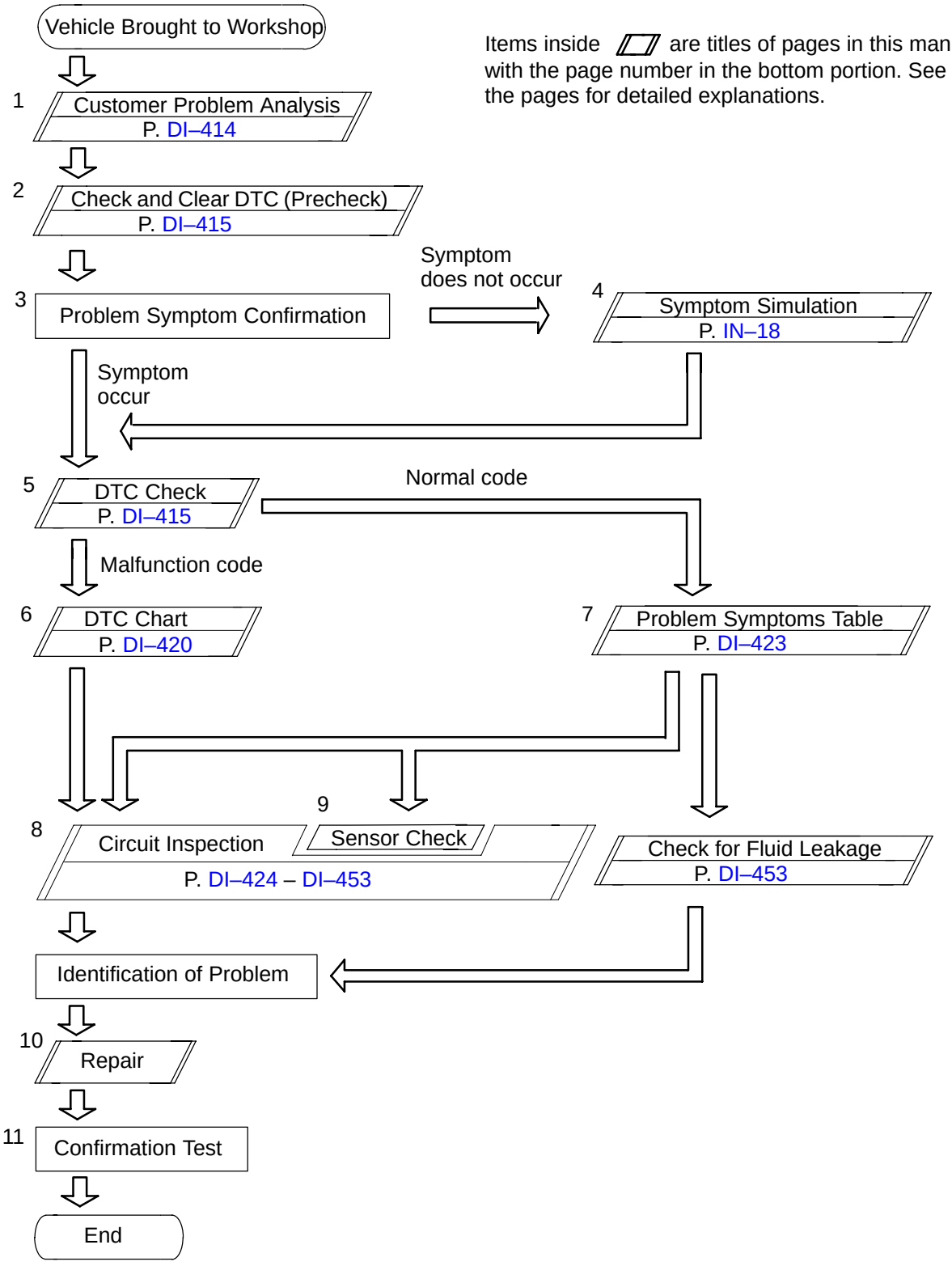

DI03X–06

PARTS LOCATION

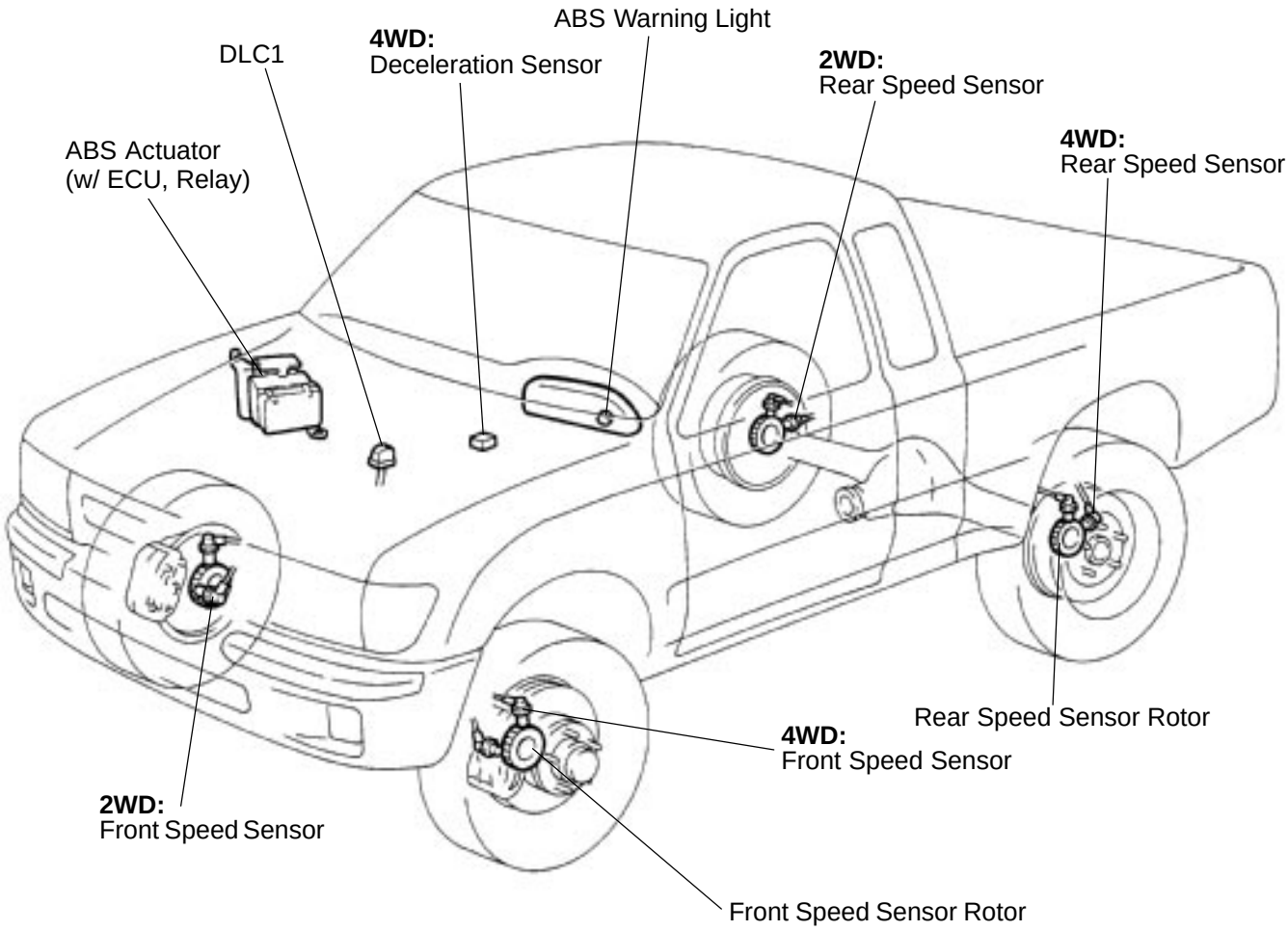

F00772

DI554–01

PRE–CHECK

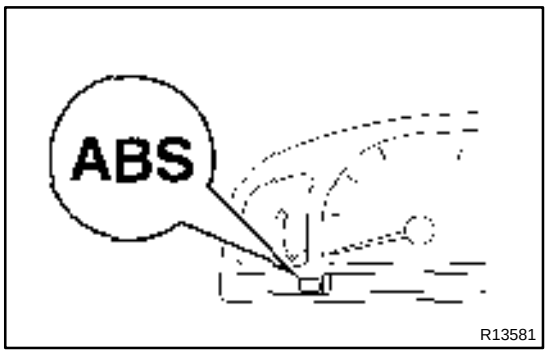

1. DIAGNOSIS SYSTEM

(a) Check the indicator.
When the ignition switch is turned ON, check that the ABS warning light goes on for 3 seconds.

HINT:
If the indicator check result is not normal, proceed to trouble-shooting for the ABS warning light circuit (See page DI–447).

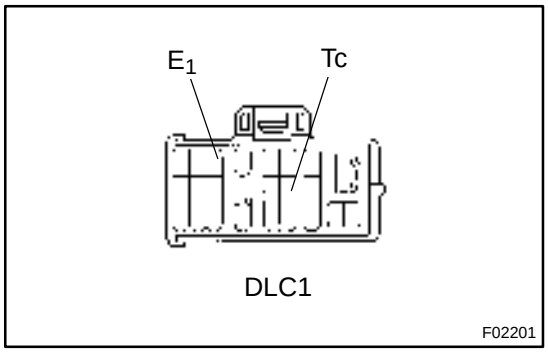

(b) Check the DTC.
(1) Turn the ignition switch ON.
(2) Using SST, connect terminals Tc and E_1 of DLC1.
SST 09843–18020
(3) Read the DTC from the ABS warning light on the combination meter.

HINT:

- If no code appears, inspect the ABS warning light circuit or diagnostic circuit (See page DI–447 or DI–449).

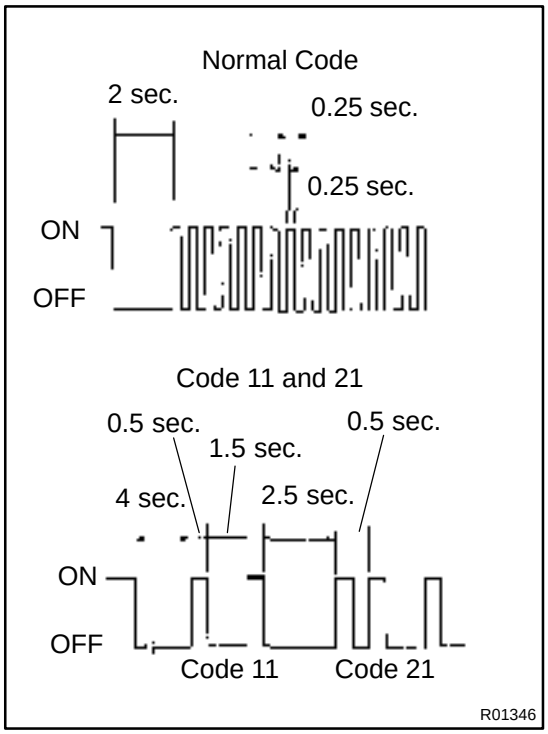

- As an example, the blinking patterns for normal code and codes 11 and 21 are shown on the left.
(4) Codes are explained in the code table on page DI–420.
(5) After completing the check, disconnect terminals Tc and E_1, and turn off the display.

If 2 or more malfunctions are indicated at the same time the lowest numbered DTC will be displayed 1st.


BR3890

(c) Clear the DTC.
(1) Using SST, connect terminals Tc and E_1 of DLC1.
SST 09843–18020
(2) Turn the ignition switch ON.
(3) Clear the DTC stored in ECU by depressing the brake pedal 8 or more times within 5 seconds.
(4) Check that the warning light shows the normal code.
(5) Remove the SST from the terminals of DLC1.
SST 09843–18020

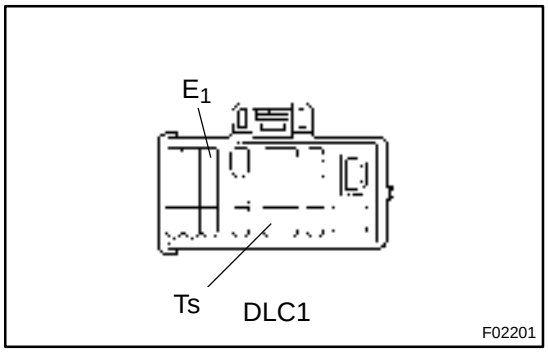

F02201

2. SPEED SENSOR SIGNAL CHECK

Check the speed sensor signal.
(1) Turn the ignition switch OFF.
(2) Using SST, connect terminals Ts and E_1 of DLC1.
SST 09843–18020
(3) Start the engine.

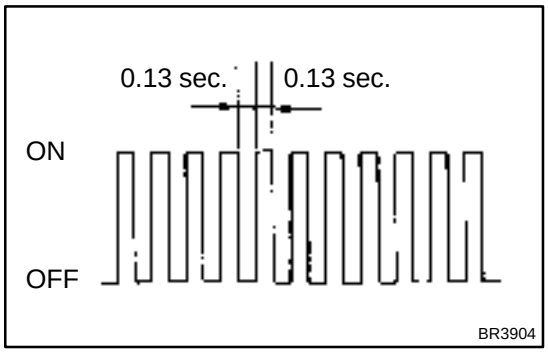

BR3904

(4) Check that the ABS warning light blinks.

HINT:
If the ABS warning light does not blink, inspect the ABS warning light circuit (See page DI–447).

(5) Drive vehicle straight forward.

HINT:
Drive vehicle faster than 45 km/h (28 mph) for several seconds.

(6) Stop the vehicle.
(7) Using SST, connect terminals Tc and E_1 of DLC1.
SST 09843–18020

(8) Read the number of blinks of the ABS warning light.

HINT:

See the list of DTC shown at the bottom of this page.

- If every sensor is normal, a normal code is output (A cycle of 0.25 sec. ON and 0.25 sec. OFF is repeating).
- If 2 or more malfunctions are indicated at the same time, the lowest numbered code will be displayed 1st.

Malfunction Code (Example Code 72, 76)

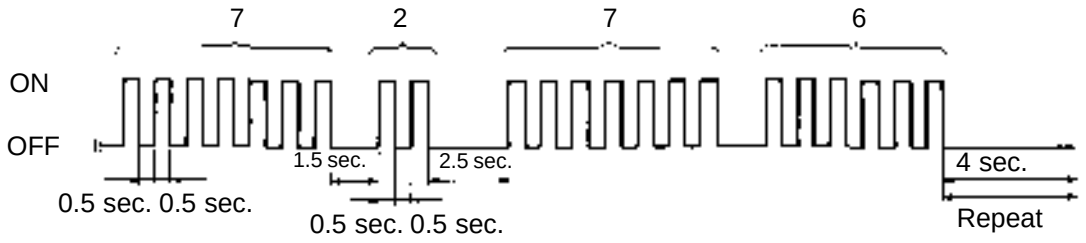

(9) After doing the check, disconnect terminals Ts and E_1, Tc and E_1 of DLC1, and turn the ignition switch OFF.

DTC of speed sensor check function:

DTC No.	Detection Item	Trouble Area
71	Low output voltage of right front speed sensor	• Right front speed sensor • Sensor installation
72	Low output voltage of left front speed sensor	• Left front speed sensor • Sensor installation
73	Low output voltage of right rear speed sensor	• Right rear speed sensor • Sensor installation
74	Low output voltage of left rear speed sensor	• Left rear speed sensor • Sensor installation
75	Abnormal change in output voltage of right front speed sensor	• Right front speed sensor rotor
76	Abnormal change in output voltage of left front speed sensor	• Left front speed sensor rotor
77	Abnormal change in output voltage of right rear speed sensor	• Right rear speed sensor rotor
78	Abnormal change in output voltage of left rear speed sensor	• Left rear speed sensor rotor
79*	Deceleration sensor is faulty	• Deceleration sensor • Sensor installation

*: 4WD models

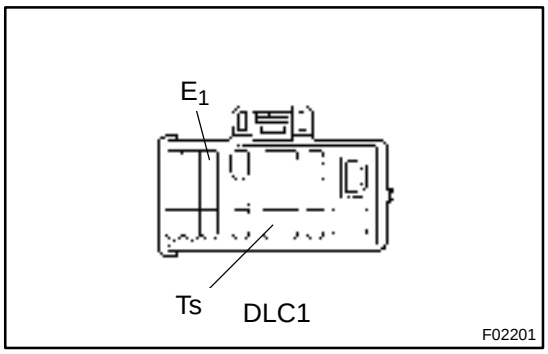

3. 4WD:
DECELERATION SENSOR CHECK

(a) Check the deceleration sensor detection point.
(1) Turn the ignition switch OFF.
(2) Using SST, connect terminals Ts and E_1 of the DLC1.
SST 09843–18020
(3) Start the engine.

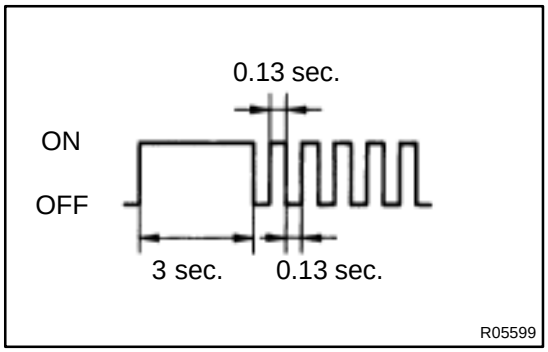

(4) Check that the ABS warning light blinks.

HINT:
If the ABS warning light does not blink, inspect the ABS warning light circuit (See page DI–447).

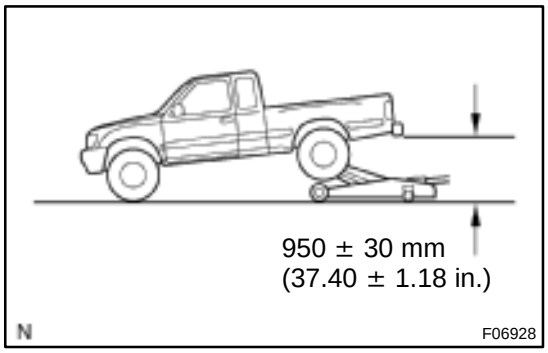

(5) Jack up the rear side of the vehicle slowly, as shown.

HINT:
When measuring the height, measure at the center of the lower body of the vehicle.

(6) Check that the ABS warning light blinks.

If the warning light turns on, inspect the deceleration sensor installation. If the sensor installation is OK, replace the deceleration sensor.

(7) Jack down the vehicle slowly.
(8) Jack up the front side of the vehicle slowly, as shown.

HINT:
When measuring the height, measure at the center of the lower body of the vehicle.

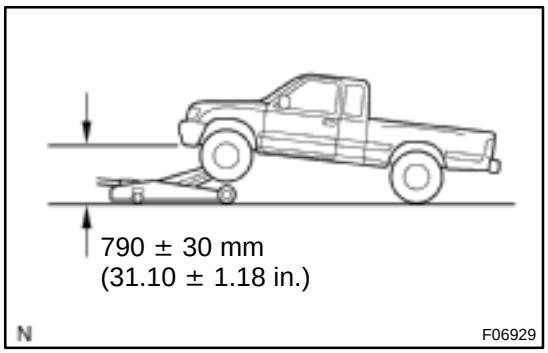

(9) Check that the ABS warning light blinks.

If the warning light turns on, inspect the deceleration sensor installation. If the sensor installation is OK, replace the deceleration sensor.

(10) Jack down the vehicle slowly.

(b) Check the deceleration sensor operation.
(1) Drive the vehicle straight ahead at about 20 km/h (12.4 mph) or more, lightly depress the brake pedal.
(2) Check that there is no change in the warning light pattern.

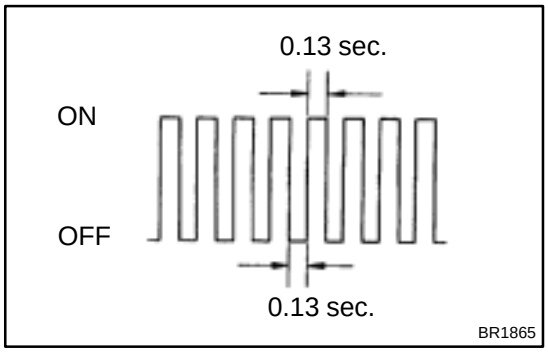

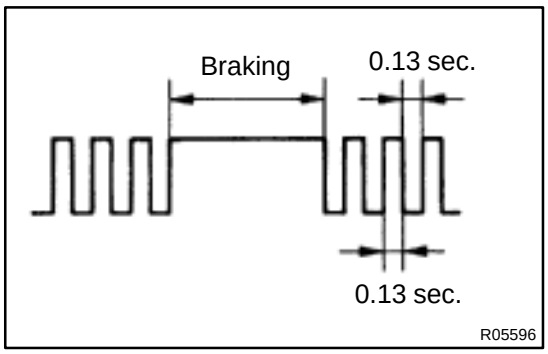

(3) Drive the vehicle straight ahead at about 20 km/h (12.4 mph) or more, and depress the brake pedal moderately.
(4) Check that the warning light turns on while braking.

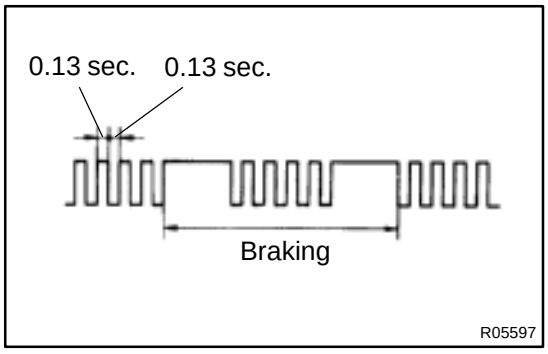

(5) Drive the vehicle straight ahead at about 20 km/h (12.4 mph) or more, and depress the brake pedal strongly.
(6) Check that the warning light pattern changes while braking, as shown.

If the operation is not as specified, inspect the deceleration sensor installation. If the sensor installation is OK, replace the deceleration sensor.

(7) Stop the vehicle and turn the ignition switch OFF.
(8) Remove SST from the terminals Ts and E_1 of the DLC1.

SST 09843–18020

DI03Z–02

PROBLEM SYMPTOMS TABLE

If a normal code is displayed during the DTC check but the problem still occurs, check the circuits for each problem symptom in the order given in the table below and proceed to the relevant troubleshooting page.

Symptom	Suspect Area	See page
ABS does not operate.	Only when 1. ~ 4. are all normal and the problem is still occurring, replace the ABS ECU. 1. Check the DTC reconfirming that the normal code is output. 2. IG power source circuit. 3. Speed sensor circuit. 4. Check the hydraulic circuit for leakage.	 DI–415 DI–434 DI–428 DI–453
ABS does not operate intermittently.	Only when 1. ~ 4. are all normal and the problem is still occurring, replace the ABS ECU. 1. Check the DTC reconfirming that the normal code is output. 2. Speed sensor circuit. 3. Stop light switch circuit. 4. Check the hydraulic circuit for leakage.	 DI–415 DI–428 DI–442 DI–453
ABS warning light abnormal.	1. ABS warning light circuit. 2. ABS ECU.	DI–447 –
DTC check cannot be done.	Only when 1. and 2. are all normal and the problem is still occurring, replace the ABS ECU. 1. ABS warning light circuit. 2. Tc terminal circuit.	 DI–447 DI–449
Speed sensor signal check cannot be done.	1. Ts terminal circuit. 2. ABS ECU.	DI–451 –

DI194–03

TERMINALS OF ECU

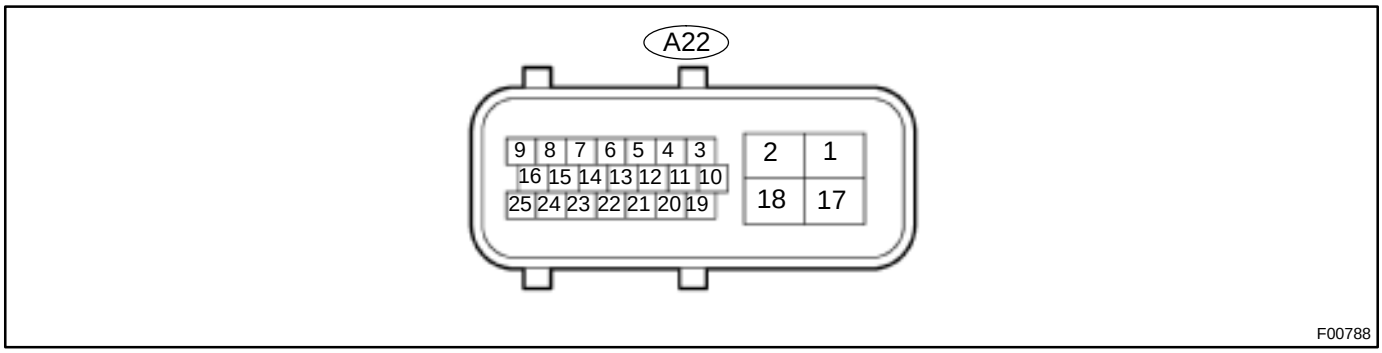

Symbols (Terminal No.)	STD Voltage (V)	Condition
+ BS (A22 – 1) – GND (A22 – 2, 18)	10 – 14	Always
+ BM (A22 – 17) – GND (A22 – 2, 18)	10 – 14	Always
IG1 (A22 – 6) – GND (A22 – 2, 18)	10 – 14	IG switch ON
WA (A22 – 10) – GND (A22 – 2, 18)	Below 2.0	IG switch ON, ABS warning light ON
	10 – 14	IG switch ON, ABS warning light OFF
STP (A22 – 24) – GND (A22 – 2, 18)	Below 1.5	Stop light switch OFF
TC (A22 – 12) – GND (A22 – 2, 18)	10 – 14	IG switch ON
TS (A22 – 21) – GND (A22 – 2, 18)	10 – 14	IG switch ON
FR+ (A22 – 23) – FR– (A22 – 22)	AC generation	IG switch ON, slowly turn right front wheel
FL+ (A22 – 9) – FL– (A22 – 8)	AC generation	IG switch ON, slowly turn left front wheel
RR+ (A22 – 19) – RR– (A22 – 20)	AC generation	IG switch ON, slowly turn right rear wheel
RL+ (A22 – 5) – RL– (A22 – 4)	AC generation	IG switch ON, slowly turn left rear wheel
EXI (A22 – 7) – GND (A22 – 2, 18)	Below 2.0	IG switch ON, transfer is in L4 or H4 position
	10 – 14	IG switch ON, transfer is in H4 position
EXI2 (A22 – 14) – GND (A22 – 2, 18)	Below 2.0	IG switch ON, rear differential is locked (4WD)
	10 – 14	IG switch ON, rear differential is free (4WD)
	Below 2.0	Always (2WD)

A/T. P. (Automatic Transmission Parking) Indicator Circuit

CIRCUIT DESCRIPTION

The propeller shaft and wheels are free even when the transmission shift lever is set to P as long as the transfer shift lever is in Neutral position. The A/T.P. indicator light lights up to warn the drive that the propeller shaft and wheels are not locked.
If the A/T.P. indicator light goes on, the transfer shift lever should be shifted out of N position.

WIRING DIAGRAM

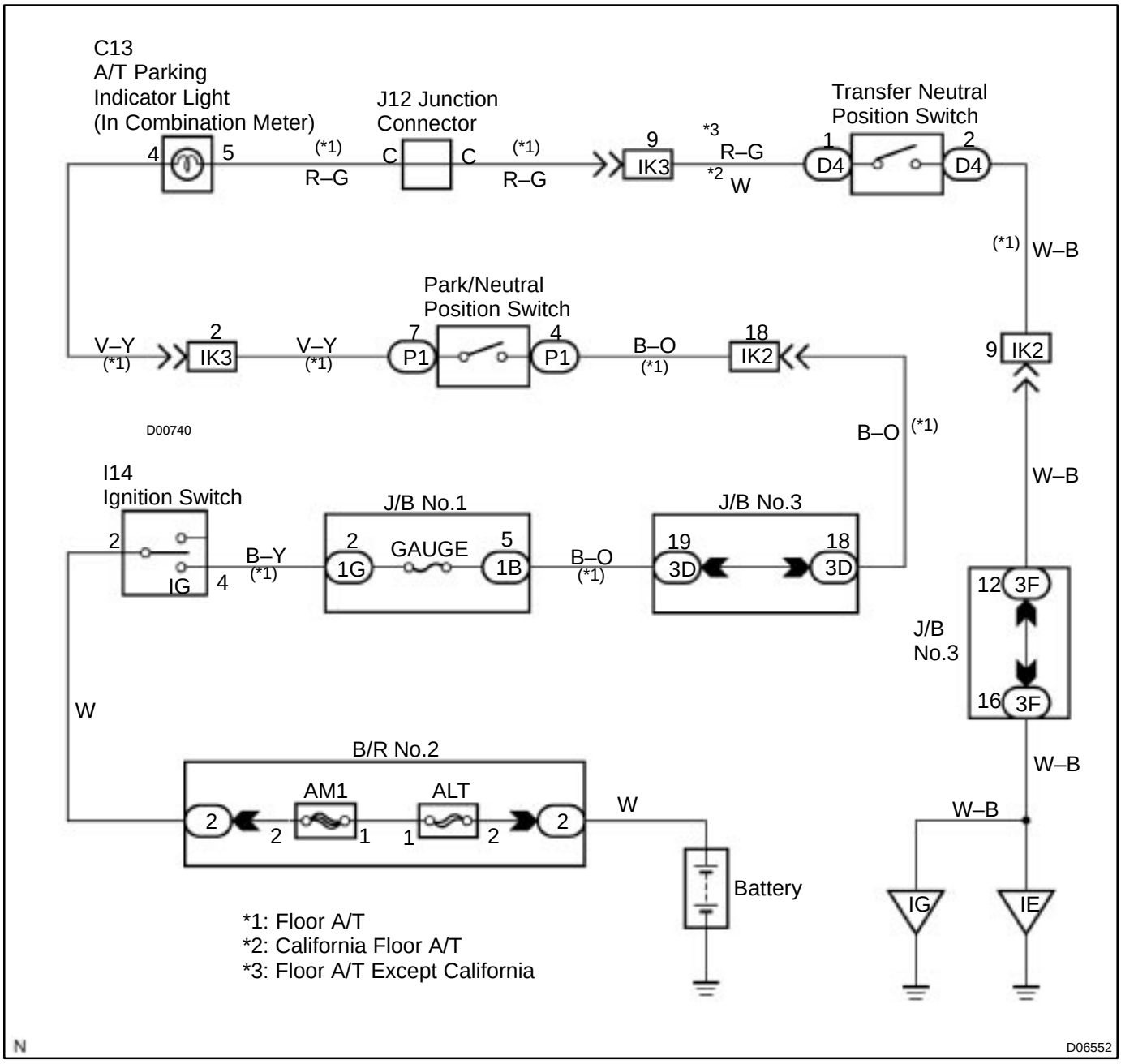

INSPECTION PROCEDURE

1	Check park/neutral position switch (See page DI–406).

NG → Replace the park/neutral position switch.

OK ↓

2	Check transfer neutral position switch (See page TR–13).

OK → Replace the transfer neutral position switch.

NG ↓

3	Check combination meter (See page BE–38).

NG → Repair or replace the combination meter.

OK ↓

Check and replace the harness and connector (See page IN–28).

O/D Cancel Signal Circuit

CIRCUIT DESCRIPTION

While driving uphill with cruise control activated, in order to minimize gear shifting and provide smooth cruising O/D may be prohibited temporarily under some conditions.
The cruise control ECU sends O/D cut signals to the ECM as necessary and the ECM cancels O/D shifting until these signals are discontinued.

WIRING DIAGRAM

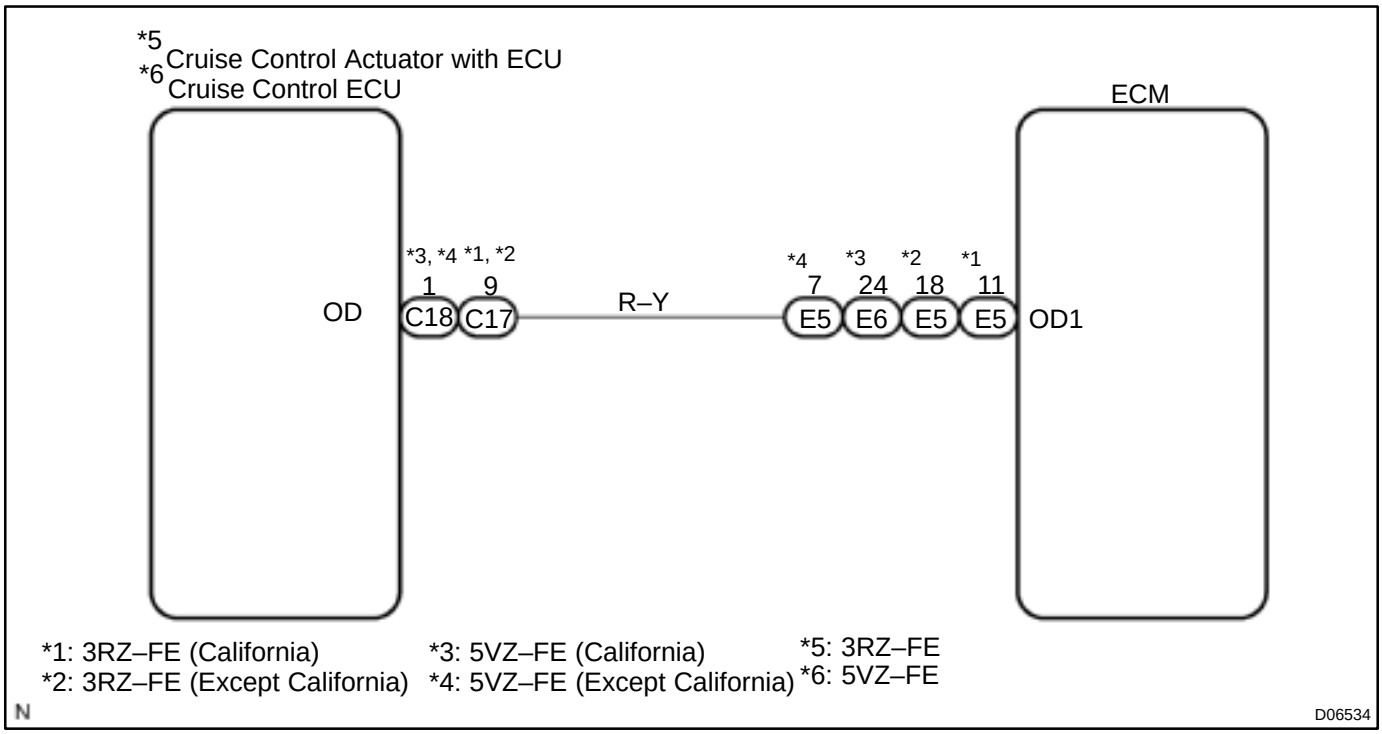

INSPECTION PROCEDURE

1	**Check voltage between terminal OD1 of ECM and body ground.**

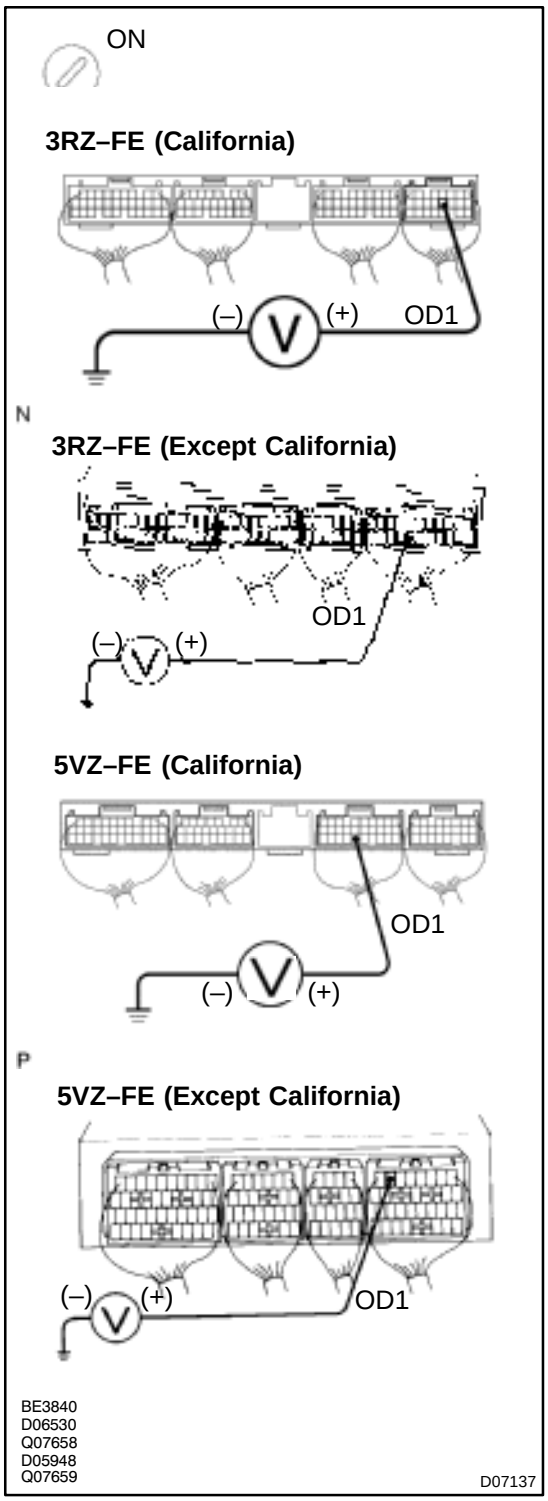

PREPARATION:

Turn the ignition switch ON.

CHECK:

Measure voltage between terminal OD1 of ECM and body ground.

OK:

Voltage: 4 – 6 V

OK → **Proceed to next circuit inspection shown on matrix chart (See page DI–363).**

NG

2	**Check voltage between terminal OD of cruise control ECU harness side connector and body ground.**

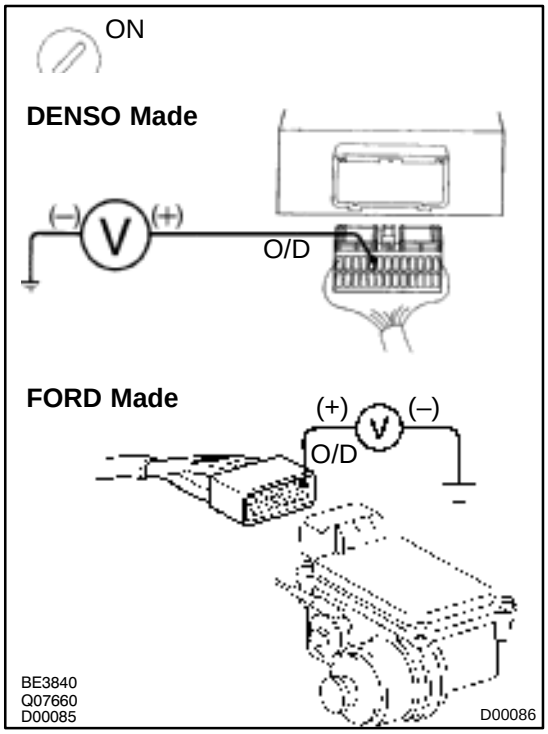

PREPARATION:

(a) Disconnect the cruise control ECU connector.

(b) Turn the ignition switch ON.

CHECK:

Measure voltage between terminal OD of cruise control ECU harness side connector and body ground.

OK:

Voltage: 4 – 6 V

OK → **Check and replace the cruise control ECU (See page DI–566 or DI–619).**

NG

3	**Check harness and connector between cruise control ECU and ECM (See page IN–28).**

NG → **Repair or replace the harness or connector.**

OK

Check and replace the ECM (See page IN–28).

O/D Main Switch & O/D OFF Indicator Light Circuit

CIRCUIT DESCRIPTION

The O/D main switch is a momentary type switch. When pressing the O/D OFF main switch, the O/D OFF indicator light lights up and ECM prohibit shifting to O/D, and when pressing it again, the O/D OFF indicator light goes off and ECM allows shifting to O/D. Turning the IG switch OFF will reset the O/D OFF indicator light.

WIRING DIAGRAM

3RZ–FE

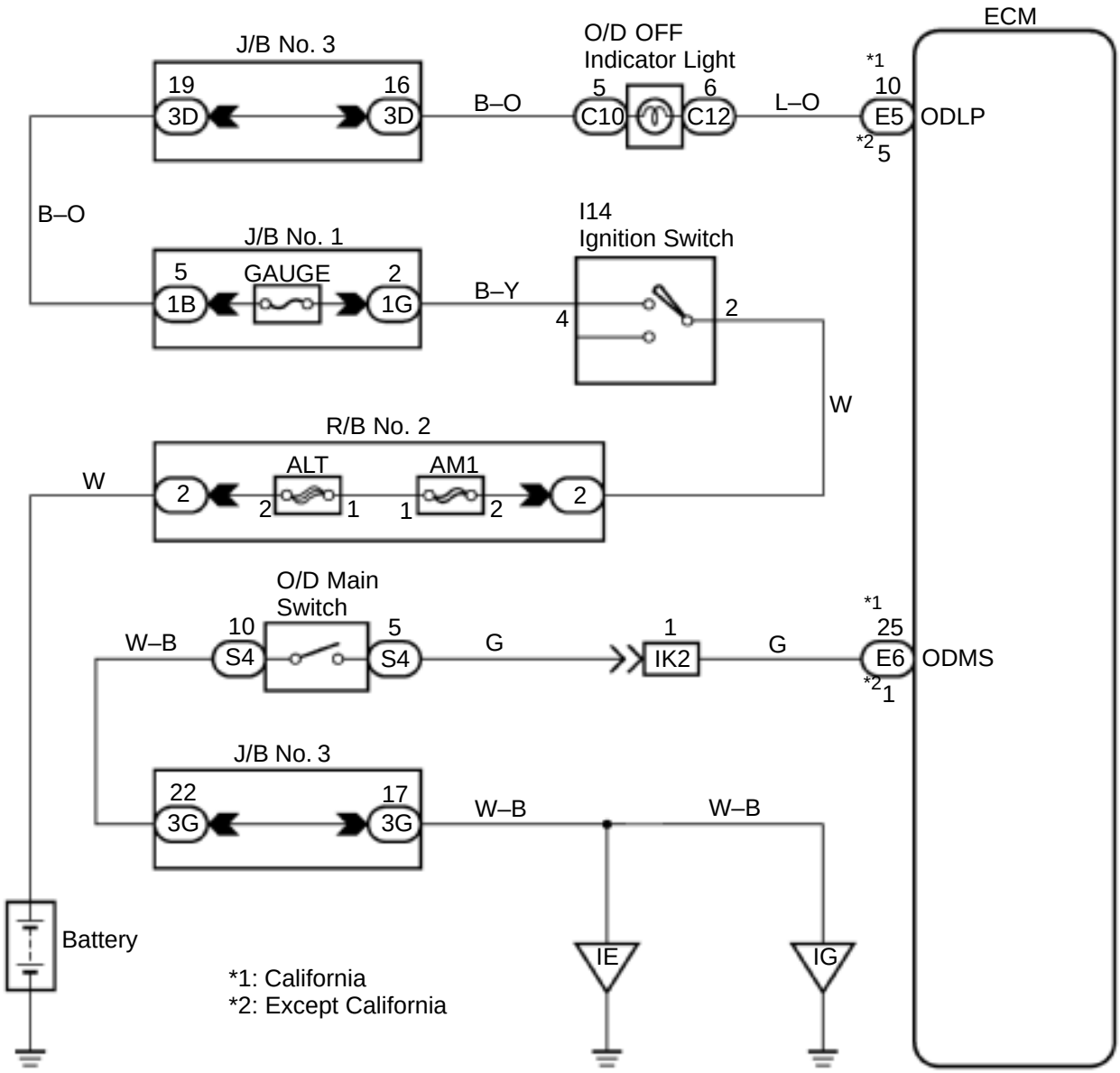

5VZ–FE

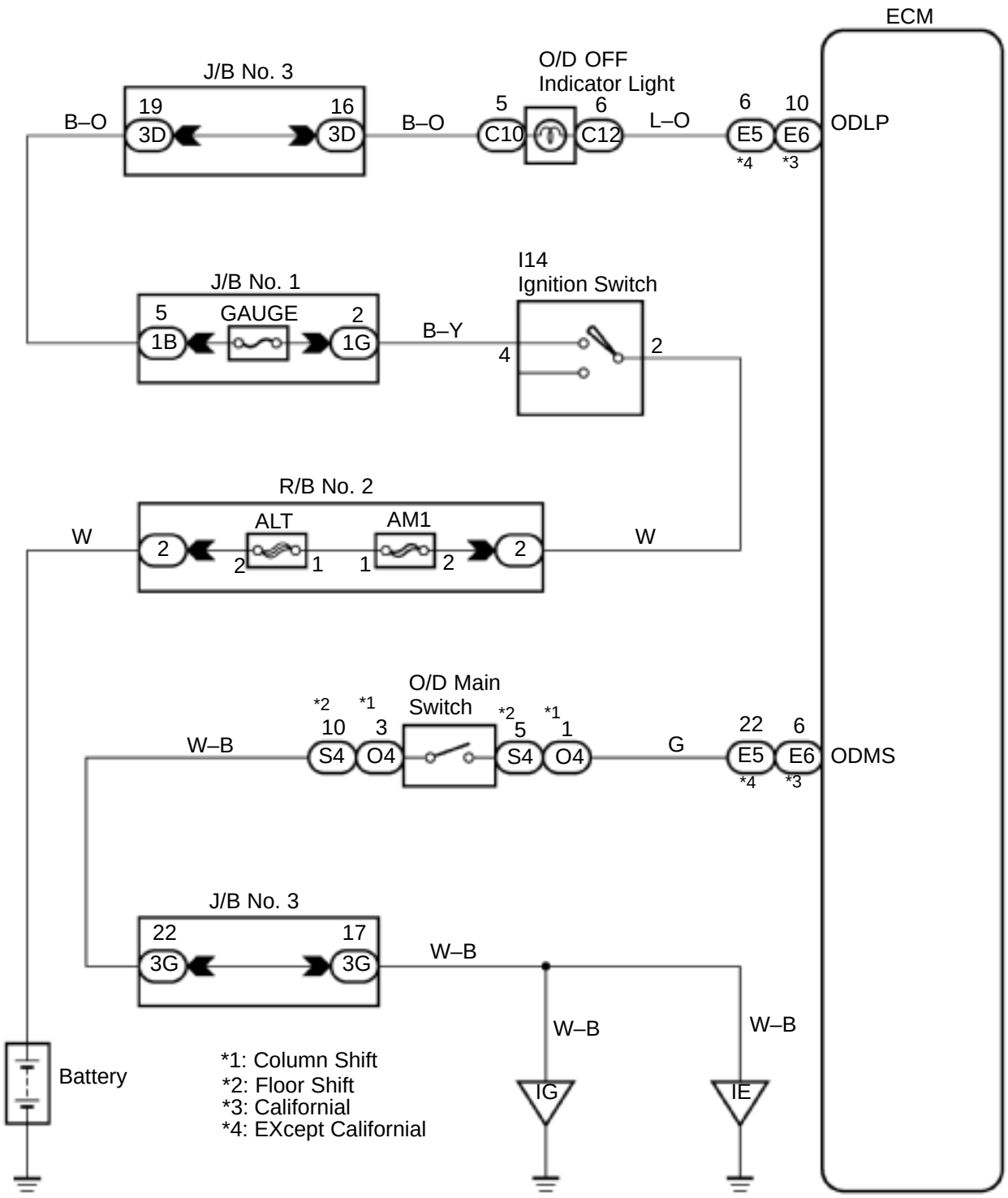

N

D06547

INSPECTION PROCEDURE

1	**Check operation of O/D main switch.**

PREPARATION:

Turn the ignition switch ON.

CHECK:

(a) Check O/D OFF indicator light when O/D main switch is pushed in to ON.

(b) Check O/D OFF Indicator light when O/D main switch is pushed again.

OK:

(a) O/D OFF indicator light lights up.

(b) O/D OFF indicator light goes off.

OK → **Proceed to next inspection shown on problem symptoms table (See page DI–363).**

NG

2	**Check and replace the combination meter (See page BE–2).**

NG → **Replace the combination meter.**

OK

3	Check O/D main switch.

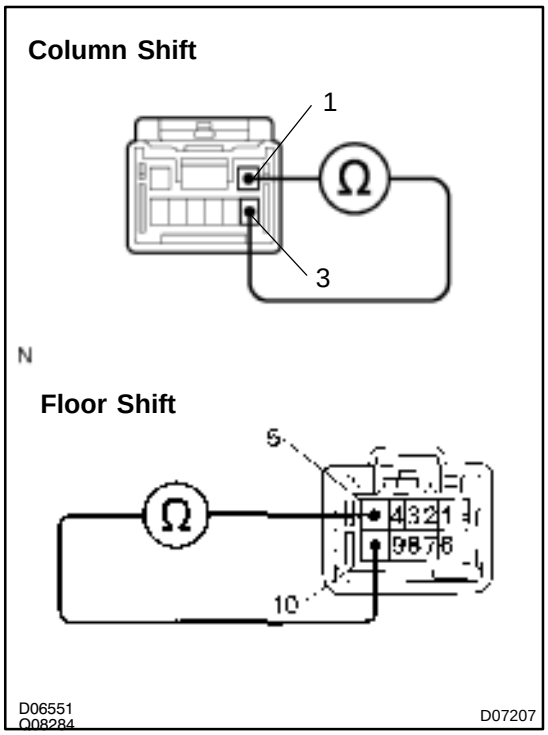

PREPARATION:

Disconnect the O/D main switch connector.

CHECK:

(a) Column shift:
Check continuity between 1 and 3 of the O/D main switch connector.

(b) Floor shift:
Check continuity between 5 and 10 of the O/D main switch connector.

OK:

O/D main switch condition	Specified condition
Press continuously O/D main switch	Continuity
Release O/D main switch	No continuity

NG → **Replace and repair O/D main switch.**

OK

4	Check voltage between terminal ODMS of ECM and body ground.

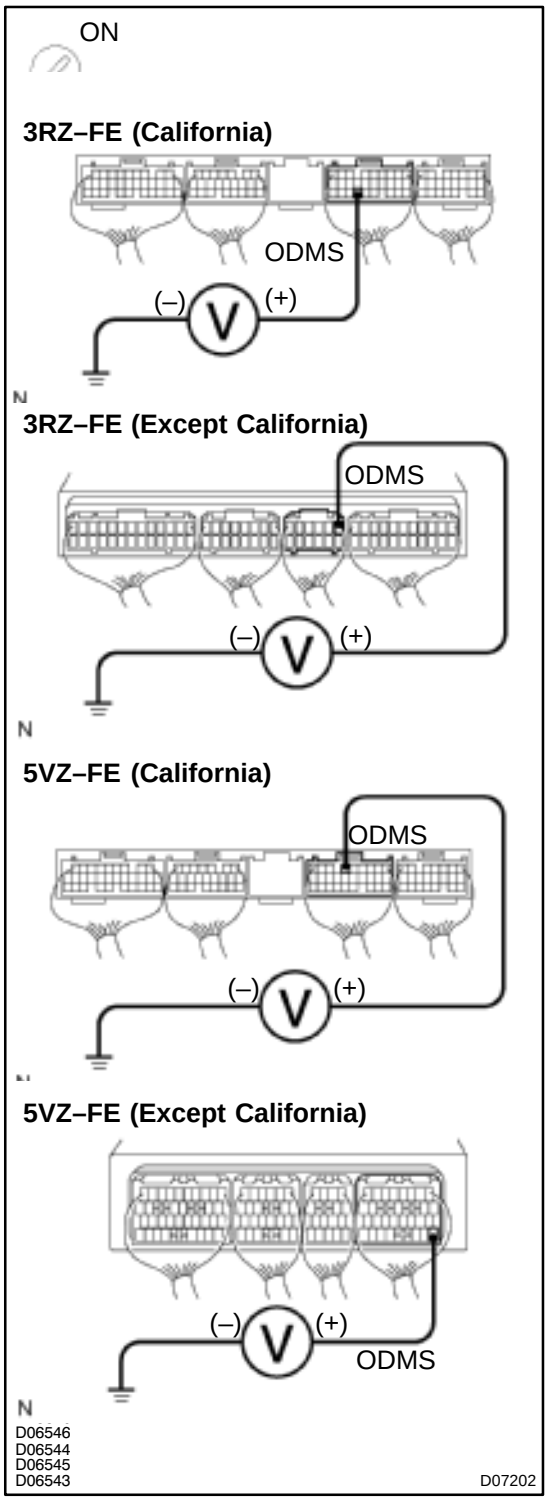

PREPARATION:

Turn the ignition switch ON.

CHECK:

Check voltage between terminal ODMS of ECM and body ground when O/D main switch is ON and OFF.

OK:

O/D main switch	Specified voltage
Press continuously O/D main switch	Below 1.0 V
Release O/D main switch	10 – 14 V

NG

OK → **Check and replace the ECM (See page IN–28).**

5	Check voltage between terminal ODLP of ECM and body ground.

ON

3RZ–FE (California)

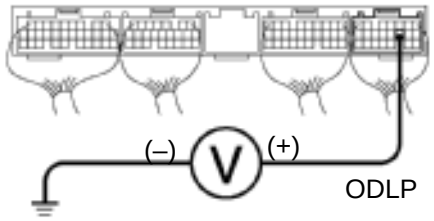

N

3RZ–FE (Except California)

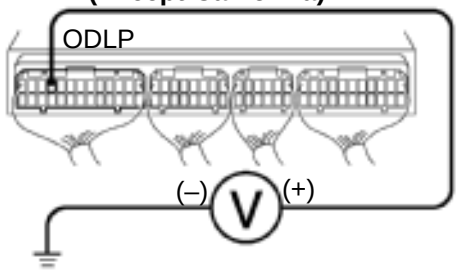

N

5VZ–FE (California)

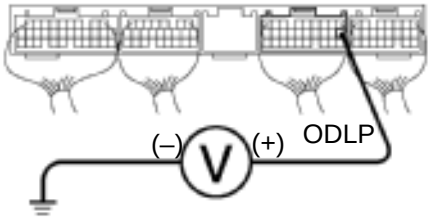

N

5VZ–FE (Except California)

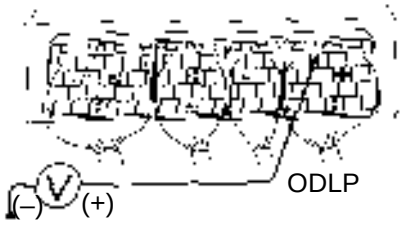

BE3840
D06529
D06542
D06541
Q07662

D07139

PREPARATION:

(a) Disconnect the connector of ECM.

(b) Turn the ignition switch ON.

CHECK:

Check voltage between terminal ODLP of ECM and body ground.

OK:

Voltage: 7.5 – 14 V

OK	Check and replace the ECM (See page IN–28).

NG

Check and replace harness and connector between combination meter and ECM, O/D main switch and ECM, O/D main switch and body ground (See page IN–28).

DI0SY–04

DTC	P1520	Stop Light Switch Signal Malfunction

CIRCUIT DESCRIPTION

The purpose of this circuit is to prevent the engine from stalling, while driving in lock–up condition, when brakes are suddenly applied.
When the brake pedal is depressed, this switch sends a signal to ECM. Then the ECM cancels operation of the lock–up clutch while braking is in progress.

DTC No.	DTC Detecting Condition	Trouble Area
P1520	The stop light switch does not turn off even once the vehicle is driven. (2 trip detection logic)	• Short in stop light switch signal circuit. • Stop light switch • ECM

WIRING DIAGRAM

See page 3RZ–FE DI–159, 5VZ–FE DI–319.

INSPECTION PROCEDURE

See page 3RZ–FE DI–159, 5VZ–FE DI–319.

DTC	P1700	Speed Sensor No.2 Circuit Malfunction (No.2 Vehicle Speed Sensor)

CIRCUIT DESCRIPTION

The No.2 vehicle speed sensor detects the rotation speed of the transmission output shaft and sends signals to the ECM. The ECM determines the vehicle speed based on these signals.
An AC voltage is generated in the No.2 vehicle speed sensor coil as the rotor mounted on the output shaft rotates, and this voltage is sent to the ECM.
The gear shift point and lock–up timing are controlled by the ECM based on the signals from this vehicle speed sensor and the throttle position sensor signal.
If the No.2 vehicle speed sensor malfunctions, the ECM uses input signals from the No.1 vehicle speed sensor as a back–up signal.

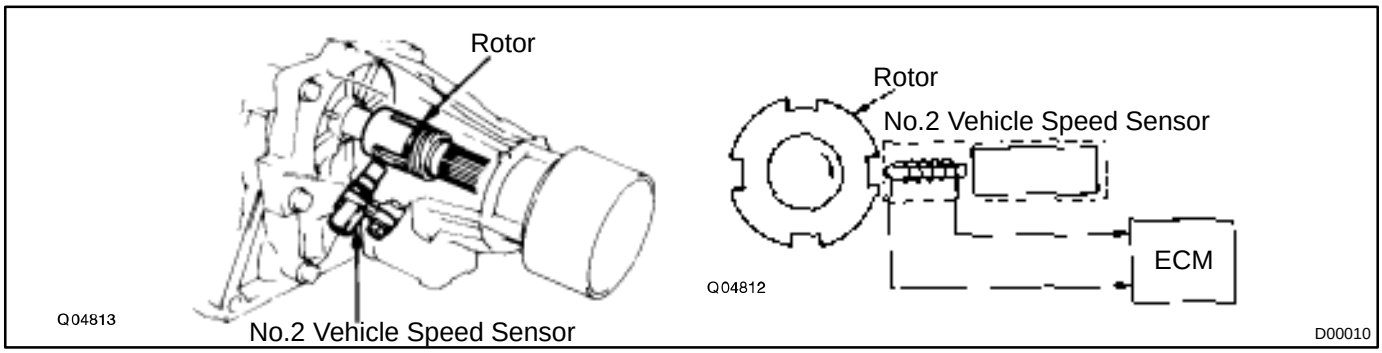

DTC No.	DTC Detecting Condition	Trouble Area
P1700	All conditions below are detected 500 times or more continuously. (2 trip detection logic) (a) No signal from No.2 vehicle speed sensor is input to ECM while 4 pulses of No.1 vehicle speed sensor signal are sent. (b) Vehicle speed: 9 km/h (5.6 mph) or more for as least 4 seconds (c) Park/neutral position switch: OFF (Other than P or N position) (d) Transfer position: Other than N position (A340F only)	• Open or short in No.2 vehicle speed sensor circuit. • No.2 vehicle speed sensor • ECM

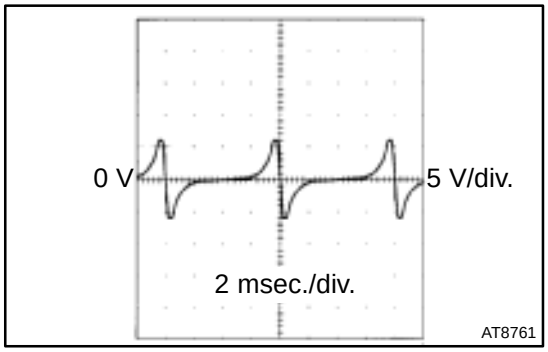

HINT:
Wave from between terminals $SP2^+$ and $SP2^-$ when vehicle speed is approx. 60 km/h (37 mph).

WIRING DIAGRAM

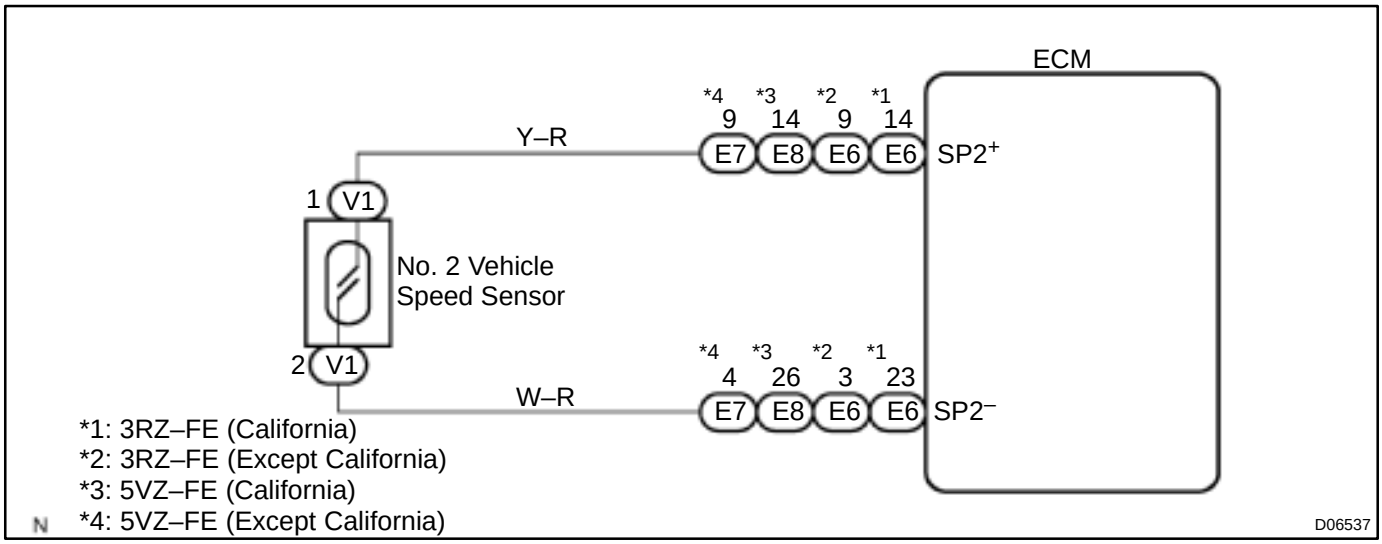

INSPECTION PROCEDURE

1	**Check vehicle speed value or resistance between terminals $SP2^+$ and $SP2^-$ of ECM.**

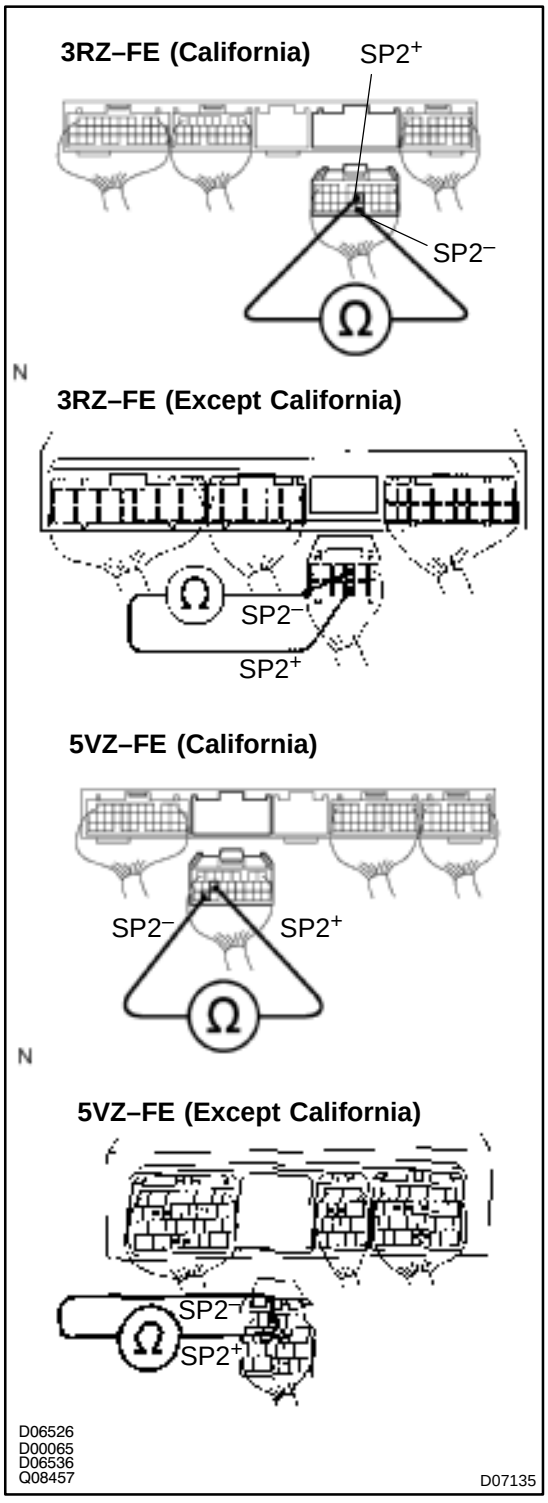

When using OBD II scan tool or TOYOTA hand–held tester

PREPARATION:

(a) Remove the DLC3 cover.

(b) Connect an OBD II scan tool or TOYOTA hand–held tester to the DLC3.

(c) Start the engine and OBD II scan tool or TOYOTA hand–held tester main switch ON.

CHECK:

Drive the vehicle and read vehicle speed value.

OK:

Vehicle speed matches tester speed value.

When not using OBD II scan tool or TOYOTA hand–held tester

PREPARATION:

Disconnect the connector from ECM.

CHECK:

Check resistance between terminals $SP2^+$ and $SP2^-$ of ECM.

OK:

Resistance: 560 – 680 Ω

NG

OK

Check and replace the ECM (See page IN–28).

2	Check No.2 vehicle speed sensor.

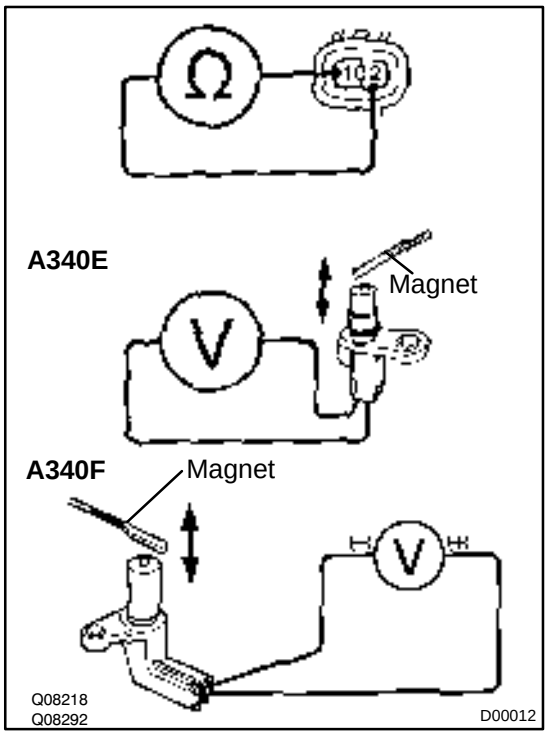

PREPARATION:

Remove the No.2 vehicle speed sensor from the transmission.

CHECK:

(a) Measure resistance between terminals 1 and 2 of vehicle speed sensor.

(b) Check voltage between terminals 1 and 2 of vehicle speed sensor when a magnet is put close to the front end of the vehicle speed sensor then taken away quickly.

OK:

(a) Resistance: 560 – 680 Ω

(b) Voltage is generated intermittently.

HINT:

The generated voltage is extremely low.

NG → **Replace the No.2 vehicle speed sensor.**

OK

Check and repair the harness and connector between ECM and No.2 vehicle speed sensor (See page IN–28).

DI69Z–01

DTC	P1780	Park/Neutral Position Switch Malfunction

CIRCUIT DESCRIPTION

The park/neutral position switch detects the shift lever position and sends signals to the ECM.
The ECM receives signals (NSW, R, 2 and L) from the park/neutral position switch. When the signal is not sent to the ECM from the park/neutral position switch, the ECM judges that the shift lever is in D position.

DTC No.	DTC Detection Condition	Trouble Area
P1780	2 or more switches are ON simultaneously for R, N, 2 and L positions. (2–trip detection logic)	• Short in park/neutral position switch circuit • Park/neutral position switch • ECM
	When driving under conditions (a) and (b) for 30 seconds or more, the park/neutral position switch is ON (N position). (2 trip detection logic) (a) Vehicle speed: 70 km/h (44 mph) or more (b) Engine speed: 1,500 – 2,500 rpm	

WIRING DIAGRAM

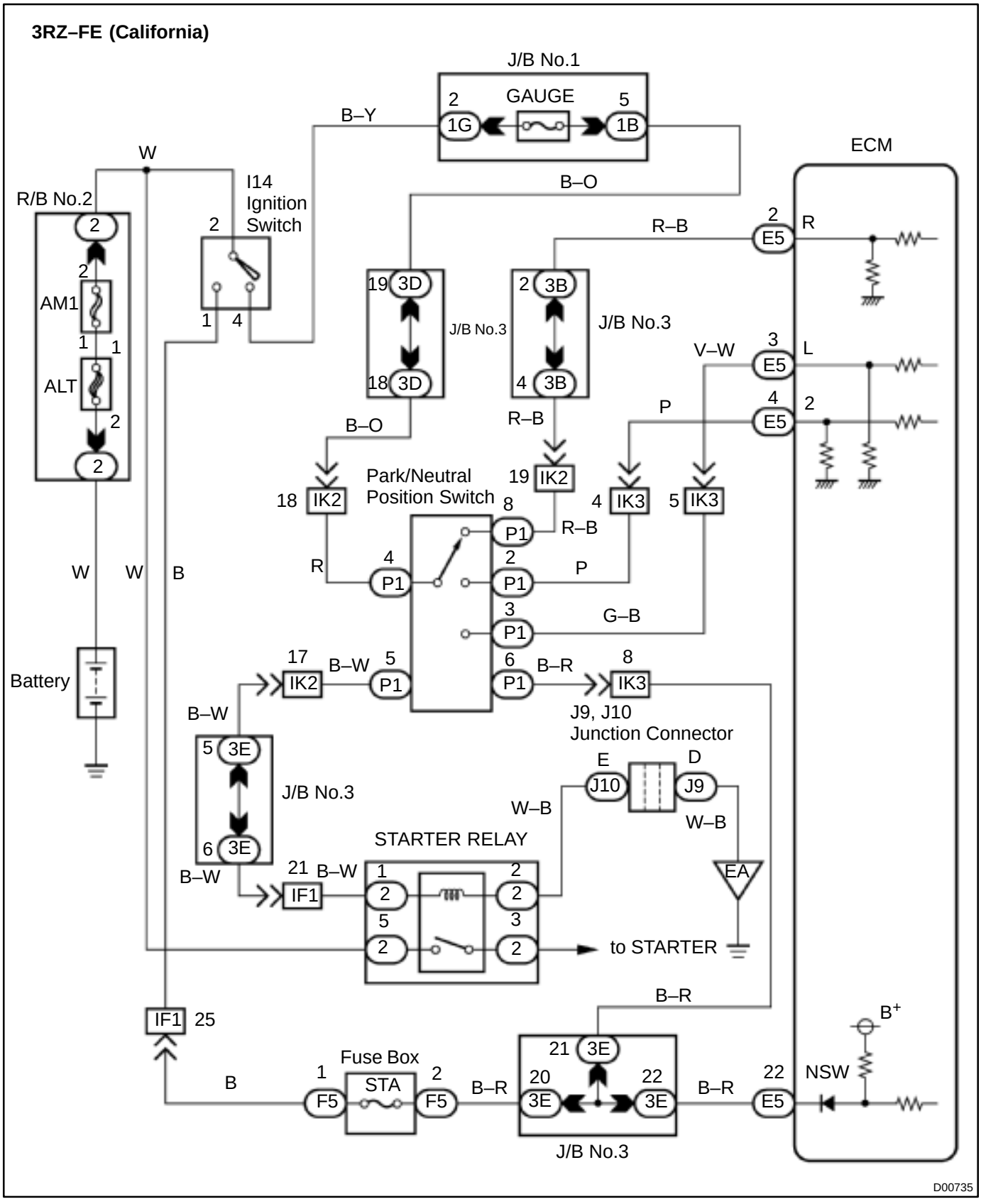

3RZ–FE (Except California)

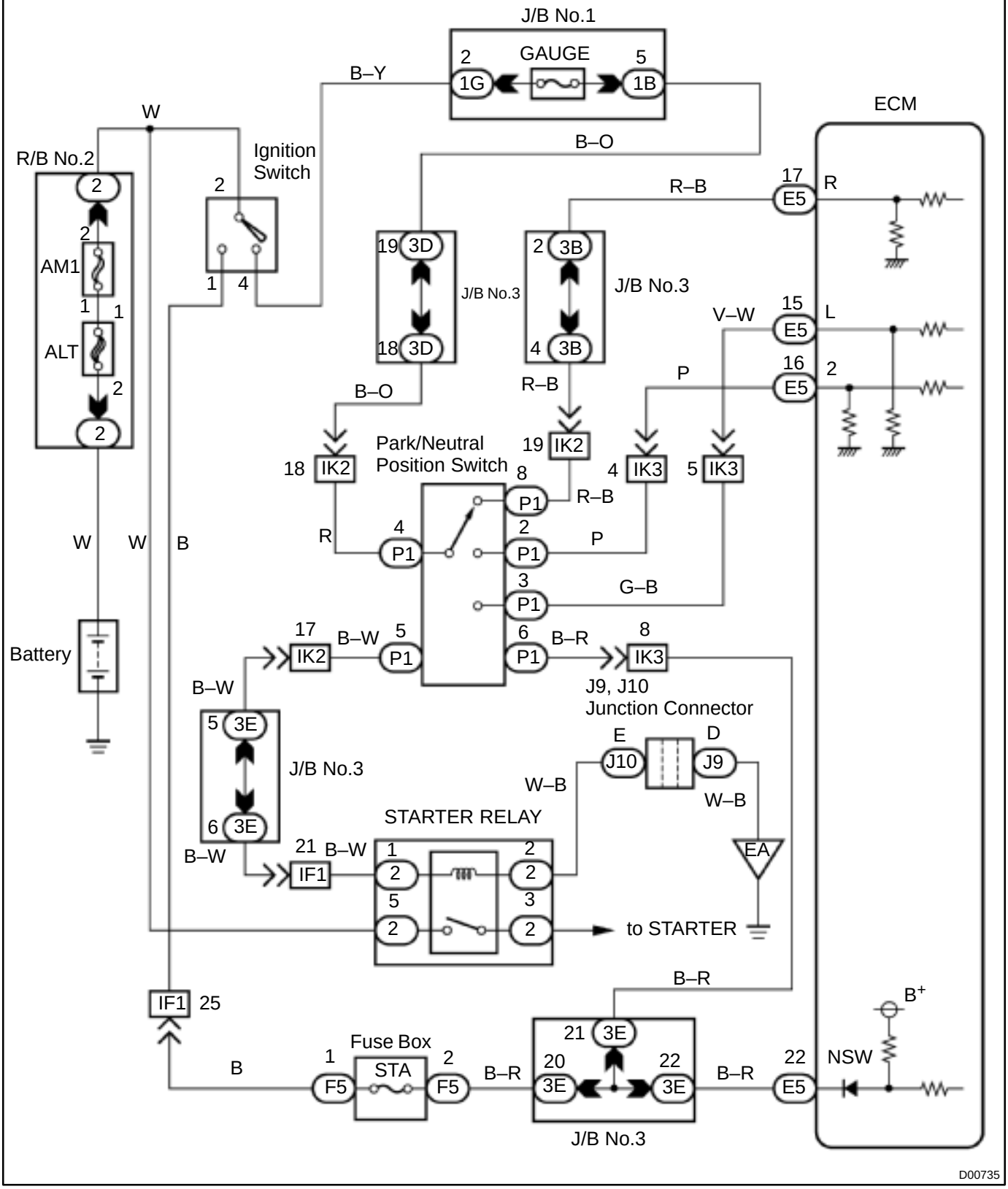

5VZ–FE (California)

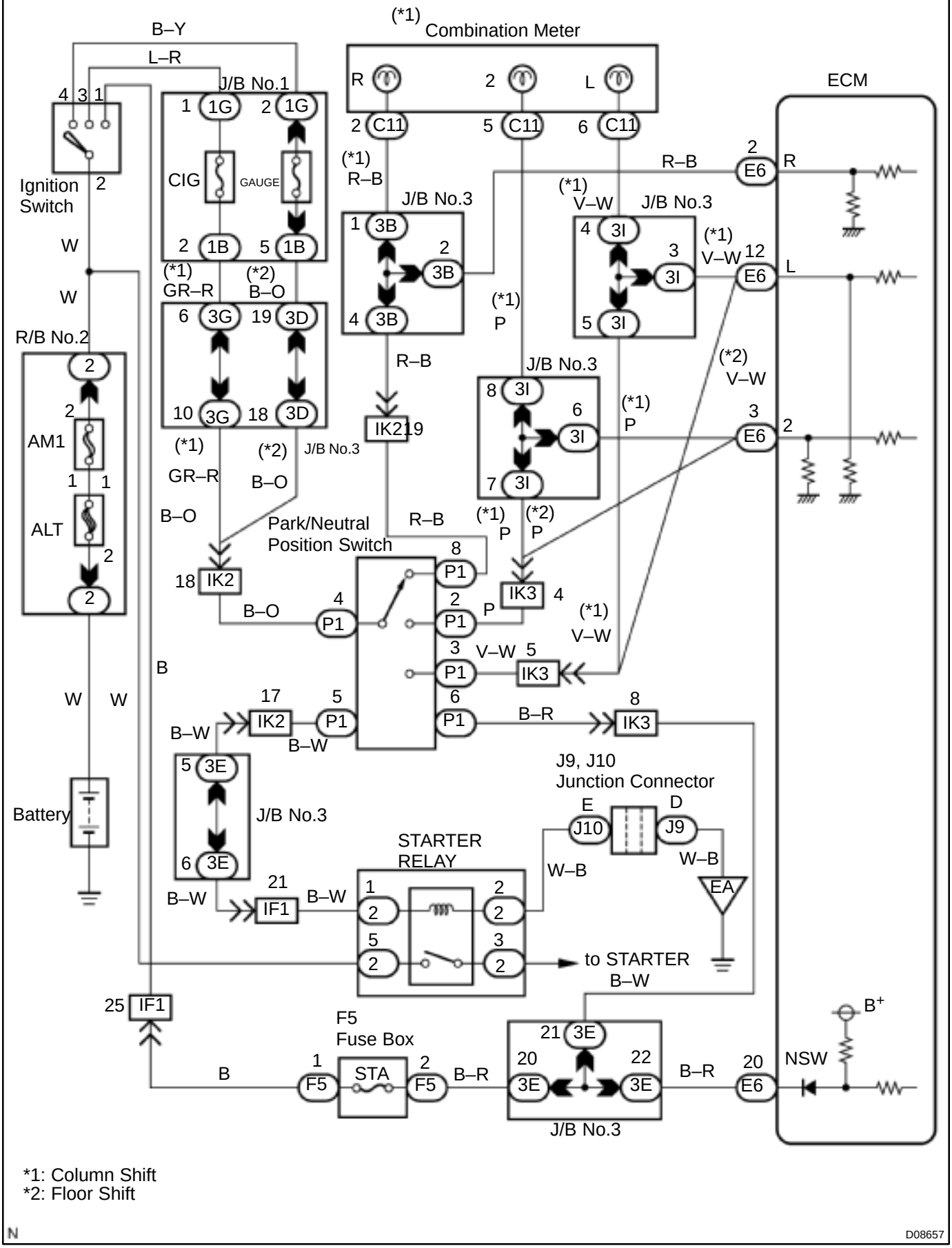

5VZ–FE (Except California)

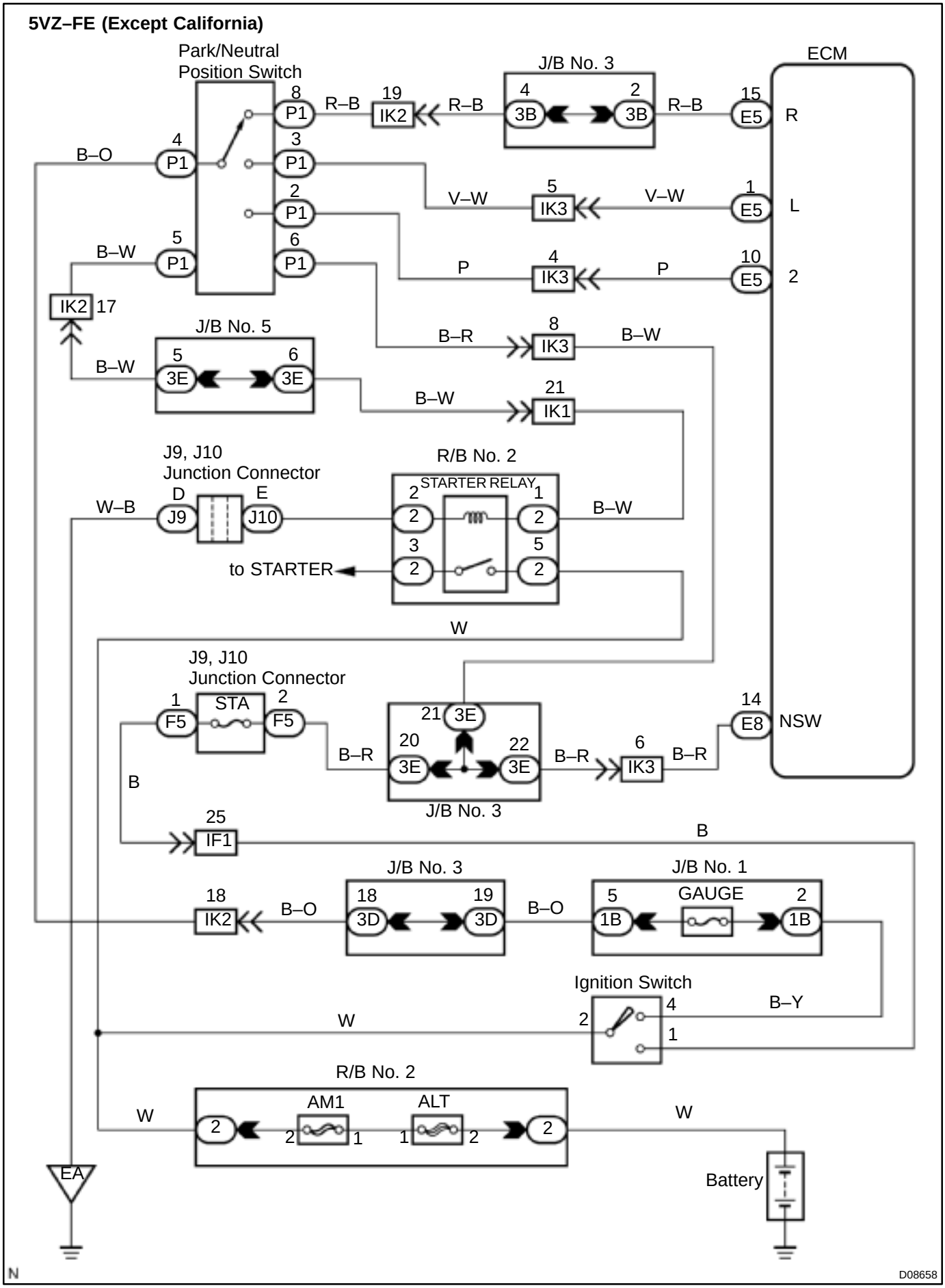

INSPECTION PROCEDURE

1	**Read PNP, REVERSE, 2ND and LOW signals.**

When using TOYOTA hand–held tester

PREPARATION:

(a) Remove the DLC3 cover.
(b) Connect a TOYOTA hand–held tester to the DLC3.
(c) Turn the ignition switch ON and TOYOTA hand–held tester main switch ON.

CHECK:

Shift lever into the P, R, N, 2 and L positions, and read the PNP, REVERSE, 2ND and LOW signals on the TOYOTA hand–held tester.

OK:

Shift position	Signal
2	2ND OFF → ON
L	LOW OFF → ON
R	REVERSE OFF → ON
P, N	PNP OFF → ON

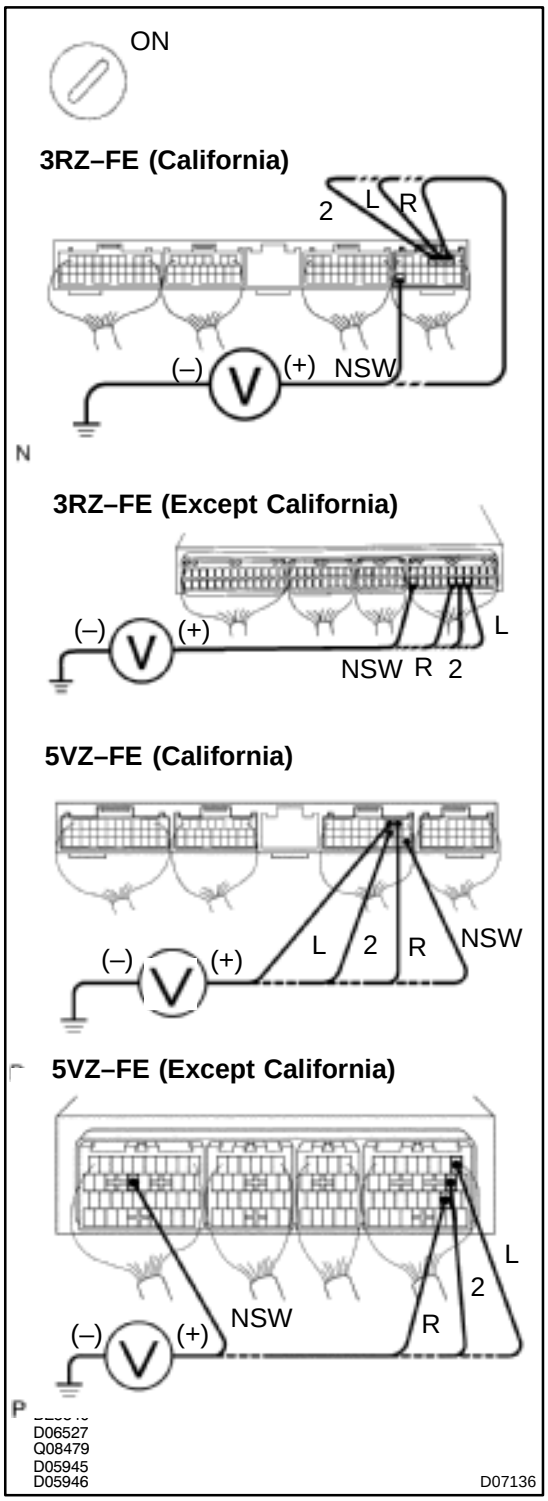

When not using TOYOTA hand–held tester

PREPARATION:

Turn the ignition switch ON.

CHECK:

Measure voltage between terminals NSW, 2, L and R of ECM and body ground when the shift lever is shifted to the following positions.

OK:

Position	NSW–Body ground	R–Body ground	2–Body ground	L–Body ground
P,N	0 V	0 V	0 V	0 V
R	7.5 – 14 V*	7.5 – 14 V*	0 V	0 V
D	7.5 – 14 V	0 V	0 V	0 V
2	7.5 – 14 V	0 V	7.5 – 14 V	0 V
L	7.5 – 14 V	0 V	0 V	7.5 – 14 V

HINT:

*: The voltage will drop slightly due to lighting up of the back up light.

OK → **Check and replace the ECM (See page IN–28).**

NG

2	Check park/neutral position switch.

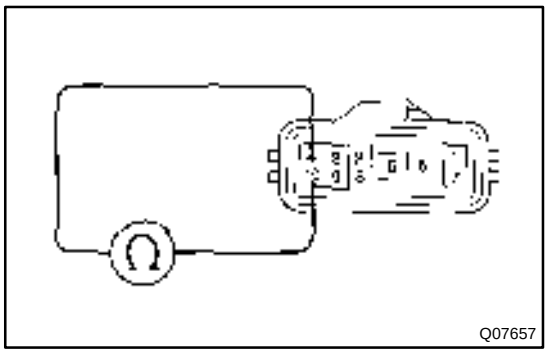
Q07657

PREPARATION:

(a) Jack up the vehicle.

(b) Disconnect the park/neutral position switch connector.

CHECK:

Check continuity between each terminal shown below when the shift lever is moved to each position.

OK:

Shift Position	Terminal No. to continuity	Terminal No. to continuity
P	4 – 7	5 – 6
R	4 – 8	–
N	4 – 10	5 – 6
D	4 – 9	–
2	4 – 2	–
L	4 – 3	–

NG → **Replace the park/neutral position switch (See page IN–28).**

OK →

Repair or replace harness and connector between battery and park/neutral position switch, park/neutral position switch and ECM (See page IN–28).

Pattern Select Switch Circuit

CIRCUIT DESCRIPTION

The ECM memory contains the shift programs for the NORMAL and POWER patterns, 2 position, L position and the lock–up patterns. Following the programs corresponding to the signals from the pattern select switch, the park/neutral position and other various sensors, the ECM switches the solenoid valves ON and OFF, and controls the transmission gear change and the lock–up clutch operation.

WIRING DIAGRAM

3RZ–FE

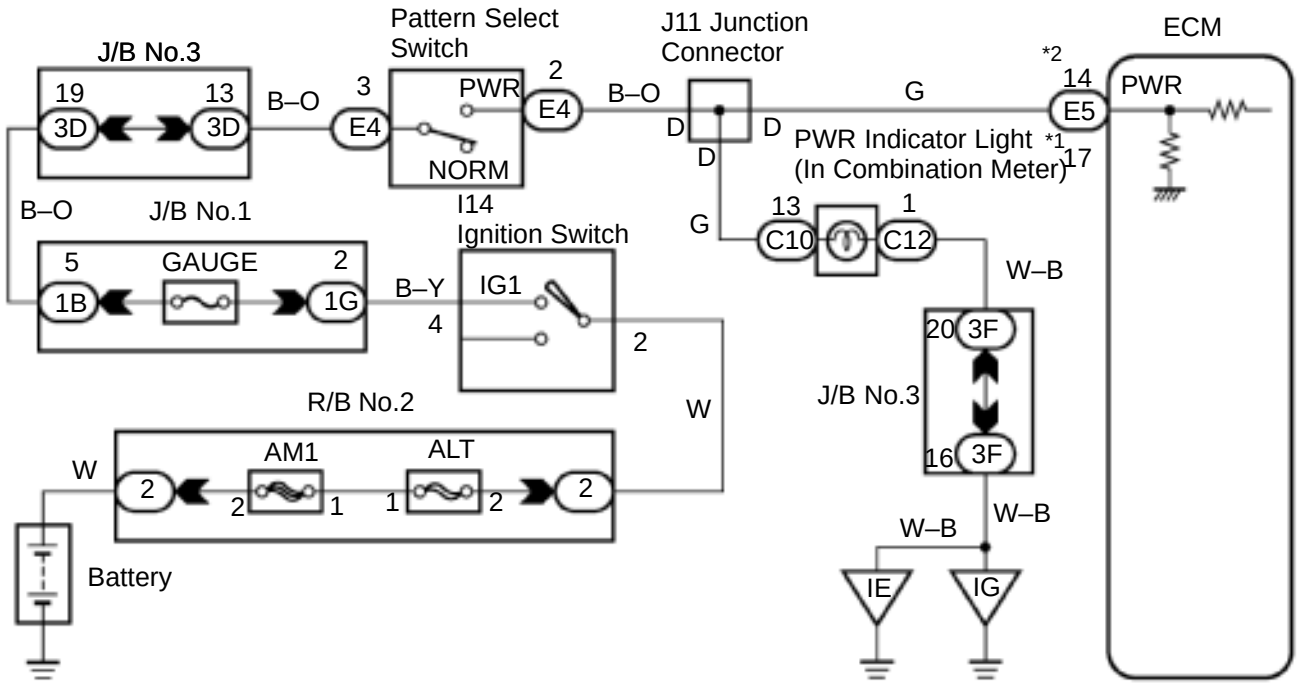

*1: California
*2: Except California

D00751

5VZ–FE

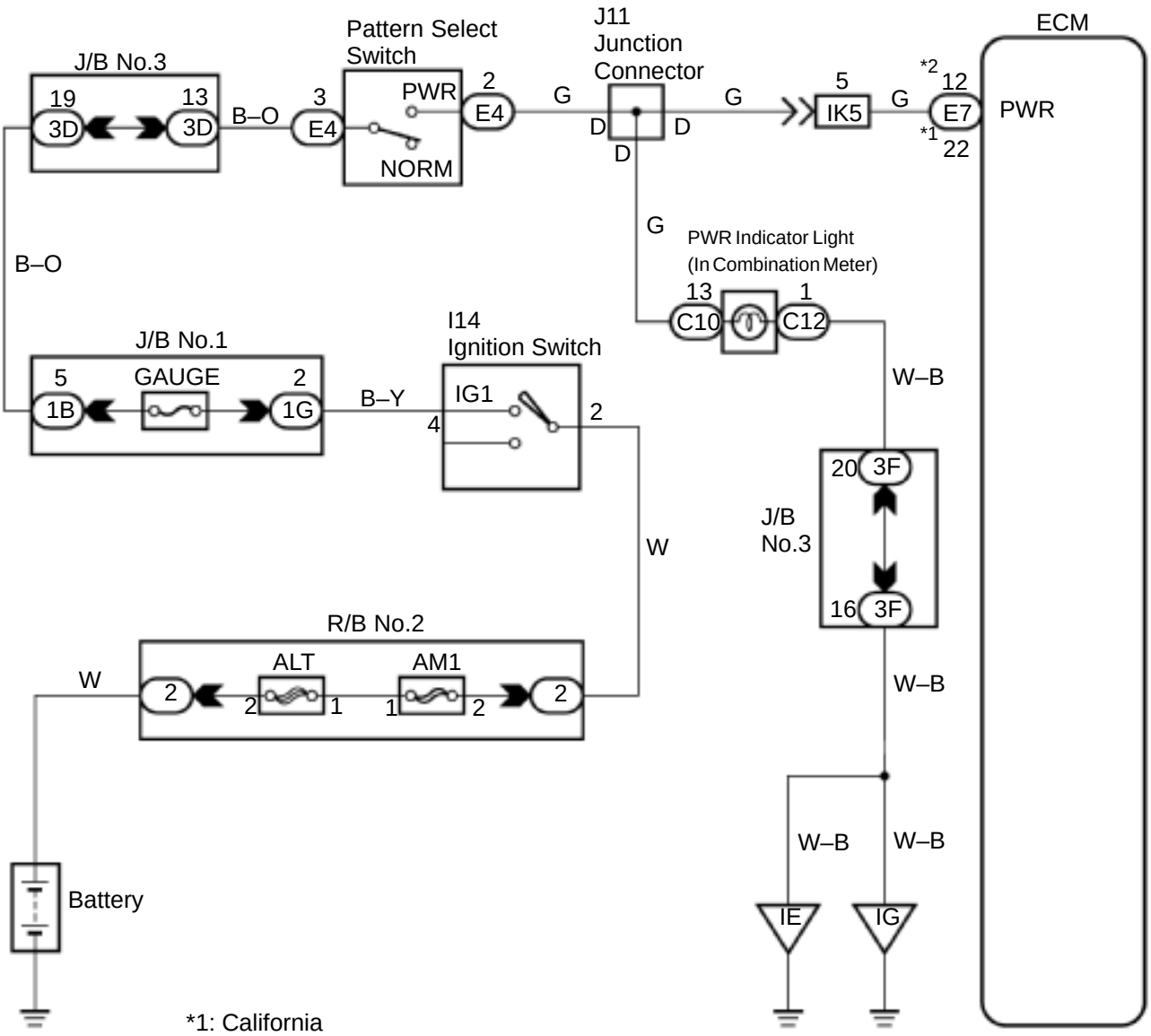
J/B No.3
19
13
3D
3D
B–O
3
E4
Pattern Select Switch
PWR
NORM
2
E4
G
J11 Junction Connector
D
D
D
G
5
IK5
G
*2
12
E7
*1
22
ECM
PWR
B–O
G
PWR Indicator Light (In Combination Meter)
13
C10
1
C12
W–B
J/B No.1
5
1B
GAUGE
2
1G
B–Y
I14 Ignition Switch
IG1
4
2
W
J/B No.3
20
3F
16
3F
W–B
R/B No.2
W
2
ALT
2
1
AM1
1
2
2
W–B
W–B
W–B
Battery
IE
IG
*1: California
*2: Except California
N
D06533

INSPECTION PROCEDURE

1	**Check PATTERN SEL SW signal.**

When using TOYOTA hand–held tester

PREPARATION:

(a) Remove the DLC3 cover.
(b) Connect a TOYOTA hand–held tester to the DLC3.
(c) Turn the ignition switch ON and TOYOTA hand–held tester main switch ON.

CHECK:

Read the PATTERN SEL SW signal on the TOYOTA hand–held tester.

OK:

Pattern select switch	PATTERN SEL SW signal
Pushed in	ON
Pushed out	OFF

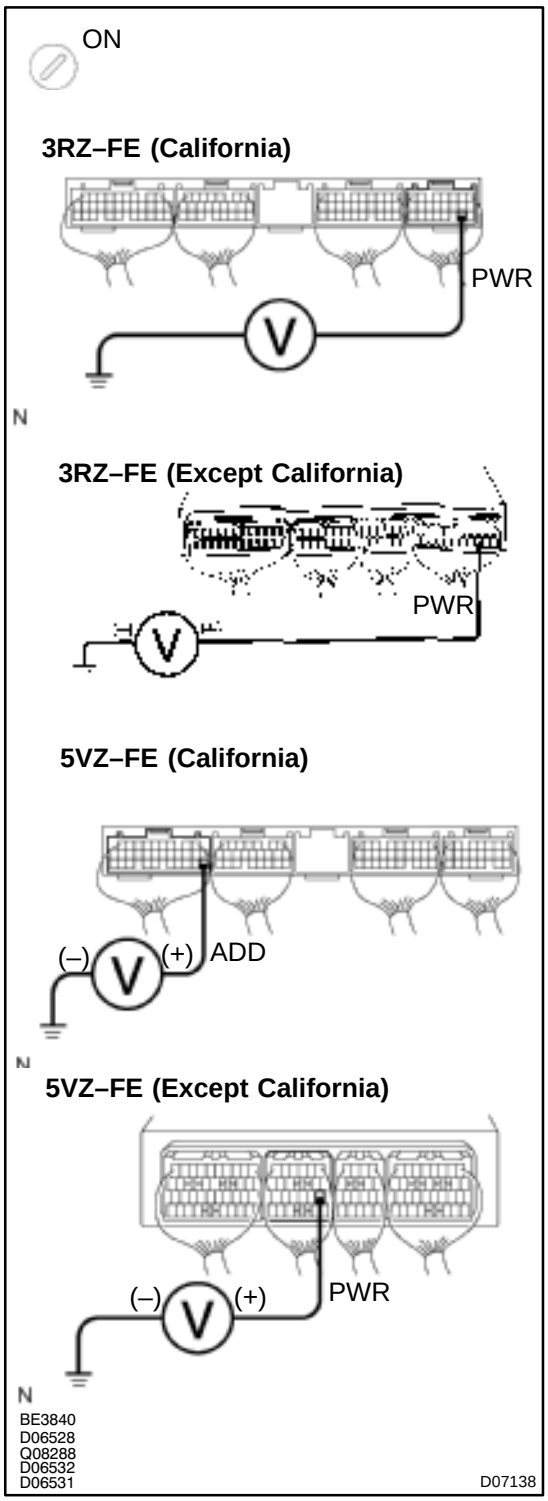

When not using TOYOTA hand–held tester

PREPARATION:

Turn the ignition switch ON.

CHECK:

Measure voltage between terminal PWR of ECM and body ground when the pattern select switch is set to the PWR (POWER) position and NORM (NORMAL) position.

OK:

Pattern select switch	Voltage
PWR	10 – 14 V
NORM	Below 1 V

HINT:

The ECM uses the normal pattern signal if the PWR signal is not input.

OK → **Proceed to next circuit inspection shown on matrix chart (See page DI–363).**

NG

2	Check pattern select switch.

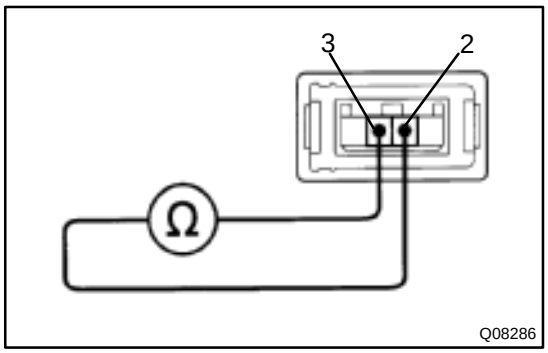

PREPARATION:
Disconnect the pattern select switch connector.
CHECK:
Check continuity between terminals 2 and 3 of pattern select switch connector when the select switch is set to PWR and NORM positions.
OK:

Pattern select switch	Specified condition
PWR	Continuity
NORM	No continuity

NG → **Replace the pattern select switch.**

OK ↓

3	Check harness and connector between battery and pattern select switch, pattern select switch and ECM (See page IN–28).

NG → **Repair or replace the harness or connector.**

OK ↓

Check and replace the ECM (See page IN–28).

DI0SS–03

CIRCUIT INSPECTION

DTC	P0500	Vehicle Speed Sensor Malfunction (No.1 Vehicle Speed Sensor)

See page 3RZ–FE DI–129, 5VZ–FE DI–294.

DTC	P0710	Transmission Fluid Temperature Sensor Malfunction (ATF Temperature Sensor)

CIRCUIT DESCRIPTION

The ATF temperature sensor converts fluid temperature into a resistance value which is input into the ECM.

DTC No.	DTC Detecting Condition	Trouble Area
P0710	Either (a) or (b) is detected for 0.5 sec. or more. (1–trip detection logic) (a) Temp. sensor resistance is less than 79 Ω (b) After the engine has been operating for 15 minutes or more, the resistance at the temp. sensor is more than 156 kΩ	• Open or short in ATF temp. sensor circuit. • ATF temp. sensor • ECM

WIRING DIAGRAM

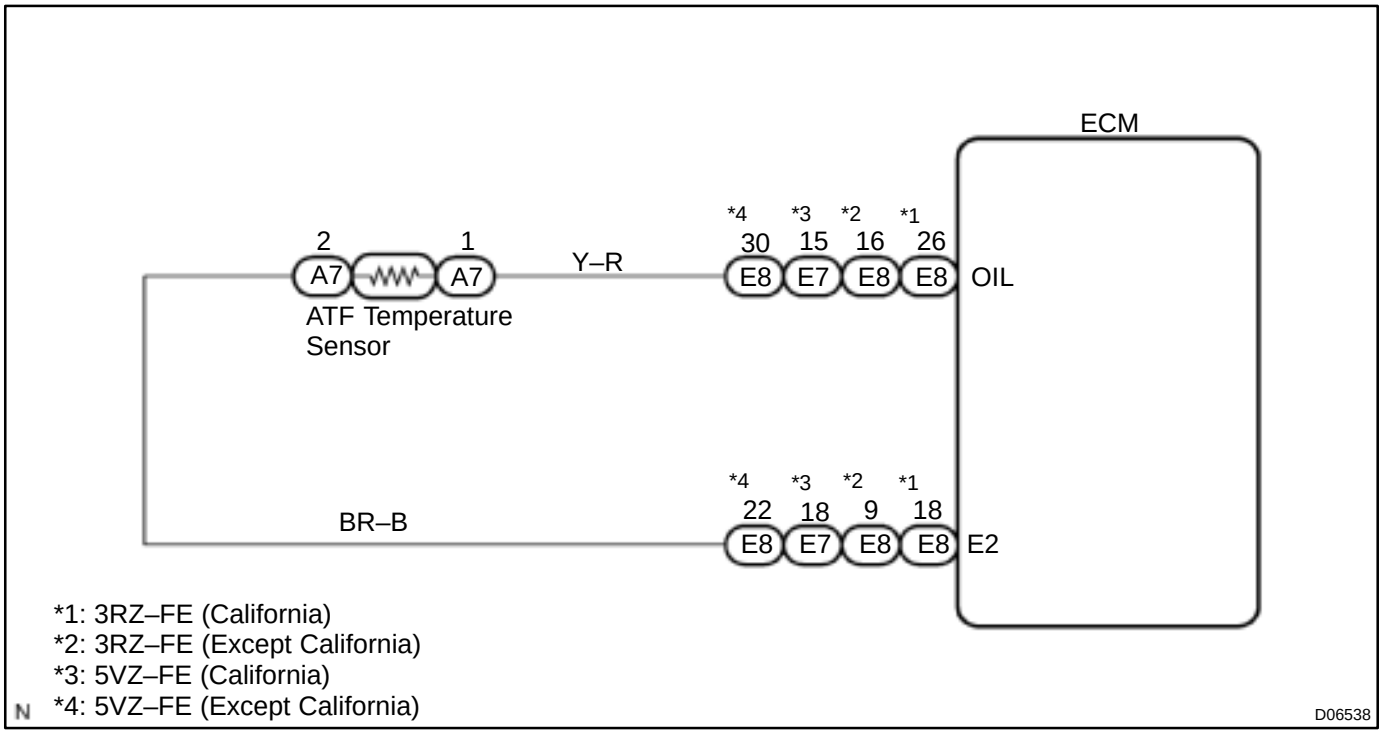

INSPECTION PROCEDURE

1	Check ATF Temperature Sensor.

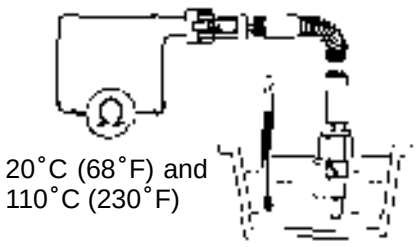

PREPARATION:
Remove the ATF temperature sensor.
CHECK:
Measure resistance between terminals of ATF temperature sensor at 20 ˚C (68 ˚F) and 110 ˚C (230 ˚F).
OK:

Resistance (Approx.):
20 ˚C (68 ˚F): 12.1 kΩ
110 ˚C (230 ˚F): 790 Ω

NG → **Replace the ATF temperature sensor.**

OK

2	Check harness and connector between ATF temperature sensor and ECM (See page IN–28).

NG → **Repair or replace the harness or connector.**

OK

Check and replace the ECM (See page IN–28).

DTC	P0750, P0755	Shift Solenoid A/B Malfunction (Shift Solenoid Valve No.1/No.2)

SYSTEM DESCRIPTION

The ECM uses signals from the vehicle speed sensor to detect the actual gear position (1st, 2nd, 3rd or O/D gear).
The ECM then compares the actual gear with the shift schedule in the ECM memory to detect mechanical trouble of the shift solenoid valves and valve body.

DTC No.	DTC Detecting Condition	Trouble Area
P0750 P0755	During normal driving, the gear required by the ECM does not match the actual gear. (2–trip detection logic)	• Shift solenoid valve No.1/No.2 is stuck open or closed. • Valve body is blocked up or stuck.

HINT:
Check the shift solenoid valve No.1 when DTC P0750 is output and check shift solenoid valve No.2 when DTC P0755 is output.

INSPECTION PROCEDURE

1	**Check shift solenoid valve No.1 or No.2 operation.**

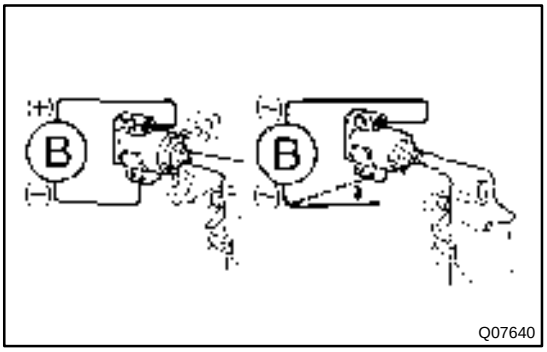

PREPARATION:
(a) Remove the oil pan.
(b) Remove the shift solenoid valve No.1 or No.2.

CHECK:
(a) Applying 490 kPa (5 kgf/cm^2, 71 psi) of compressed air, check that the solenoid valve does not leak air.
(b) When battery positive voltage is supplied to the shift solenoid valve, check that the solenoid valve opens.

OK:
(a) Solenoid valve does not leak air.
(b) Solenoid valve opens.

NG → **Replace the shift solenoid valve No.1 or No.2.**

OK

2	**Check the valve body (See page DI–363).**

NG → **Repair or replace the valve body.**

OK

Repair or replace the transmission (See page AT–24 or AT–30).

DTC	P0753, P0758	Shift Solenoid A/B Electrical Malfunction (Shift Solenoid Valve No.1/No.2)

CIRCUIT DESCRIPTION

Shifting from 1st to O/D is done in combination with ON and OFF of the shift solenoid valves No.1 and No.2 controlled by ECM. If an open or short circuit occurs in either of the shift solenoid valves, the ECM controls the remaining normal shift solenoid valve to allow the vehicle to be operated safely (Fail safe function).

Position	NORMAL			SHIFT SOLENOID NO.1 MALFUNCTIONING			SHIFT SOLENOID NO.2 MALFUNCTIONING			BOTH SOLENOIDS MALFUNCTIONING
	Solenoid valve		Gear	Solenoid valve		Gear	Solenoid valve		Gear	Gear when shift selector is manually operated
	No.1	No.2		No.1	No.2		No.1	No.2		
D	ON	OFF	1st	X	ON	3rd	ON	X	1st	O/D
	ON	ON	2nd	X	ON	3rd	OFF	X	O/D	O/D
	OFF	ON	3rd	X	ON	3rd	OFF	X	O/D	O/D
	OFF	OFF	O/D	X	OFF	O/D	OFF	X	O/D	O/D
2	ON	OFF	1st	X	ON	3rd	ON	X	1st	3rd
	ON	ON	2nd	X	ON	3rd	OFF	X	3rd	3rd
	OFF	ON	3rd	X	ON	3rd	OFF	X	3rd	3rd
L	ON	OFF	1st	X	OFF	1st	ON	X	1st	1st
	ON	ON	2nd	X	ON	2nd	ON	X	1st	1st

X: Malfunctions

HINT:

Check the shift solenoid valve No.1 when DTC P0753 is output and check the shift solenoid valve No.2 when DTC P0758 is output.

DTC No.	DTC Detecting Condition	Trouble Area
P0753 P0758	The ECM checks for an open or short circuit in the shift solenoid valves No.1 and No.2 circuit when it changes gear position. The ECM records DTC P0753 or P0758 if condition (a) or (b) is detected once, but it does not light up MIL. After ECM detects condition (a) or (b) continuously 8 times or more in one–trip, it causes the MIL to light up until condition (a) or (b) disappears. After that, if the ECM detects condition (a) or (b) once, it starts lighting up MIL again. (a) Solenoid resistance is 8 Ω or less (short circuit) when the solenoid is energized. (b) Solenoid resistance is 100 kΩ or more (open circuit) when the solenoid is not energized.	• Open or short in shift solenoid valve No.1/No.2 circuit. • Shift solenoid valve No.1/No.2 • ECM

Fail safe function:

If either of the shift solenoid valve circuits develops an open or short, the ECM turns the other shift solenoid ON and OFF to shift to the gear positions shown in the table above. The ECM also turns the shift solenoid valve SL OFF at the same time. If both solenoids are malfunctioning, hydraulic control cannot be done electronically so it must be done manually.

Manual shifting as shown in the following table must be done (In the case of a short circuit, the ECM stops sending current to the short circuited solenoid).

WIRING DIAGRAM

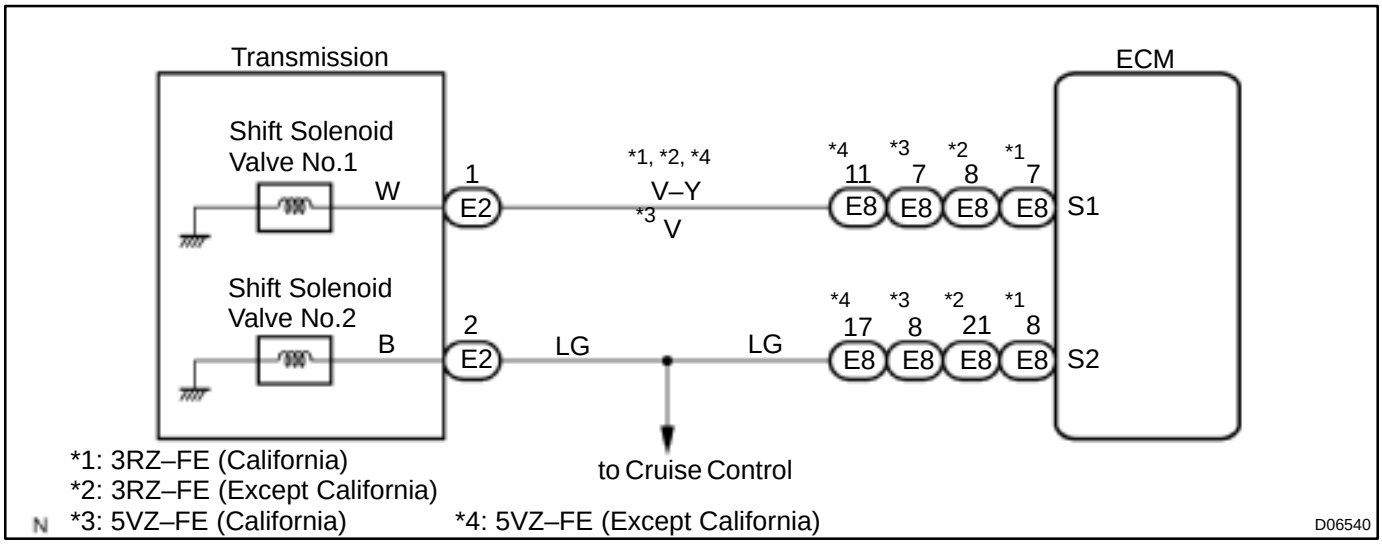

INSPECTION PROCEDURE

1	**Measure resistance between terminal S1 or S2 of ECM and body ground.**

3RZ–FE (California) and 5VZ–FE (California)

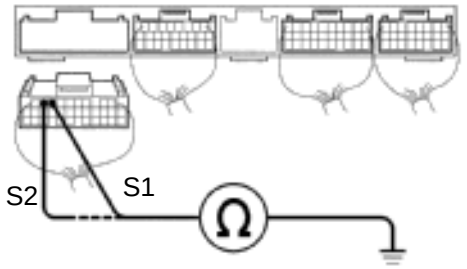

3RZ–FE (Except California)

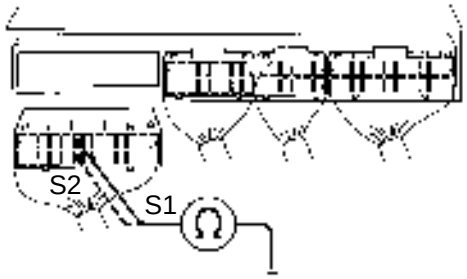

5VZ–FE (Except California)

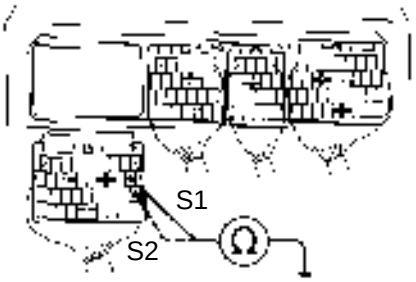

D05217
D00067
Q07642

D07131

PREPARATION:

Disconnect the connector from ECM.

CHECK:

Measure resistance between terminal S1 or S2 of ECM and body ground.

OK:

Resistance: 11 – 15 Ω

OK → **Check and replace the ECM (See page IN–28).**

NG

2	**Check harness and connector between ECM and automatic transmission solenoid connector.**

3RZ–FE (California) and 5VZ–FE (California)

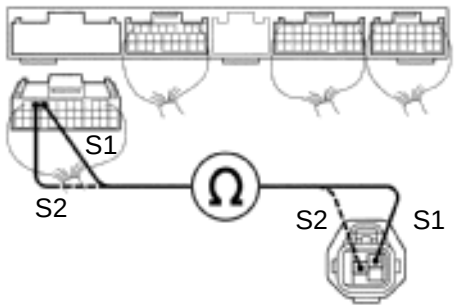

3RZ–FE (Except California)

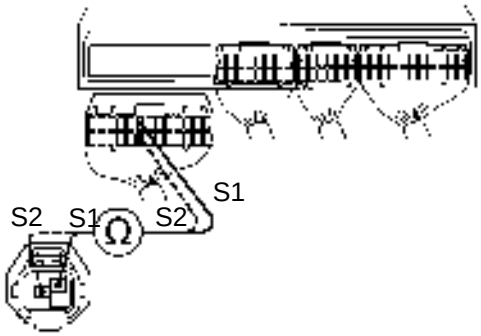

5VZ–FE (Except California)

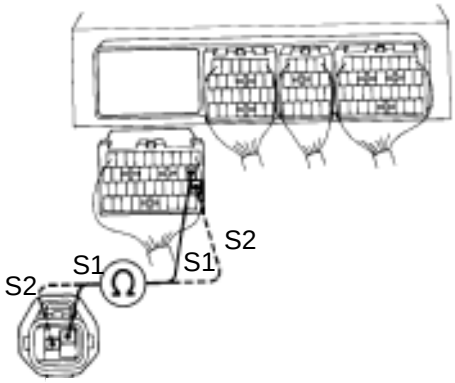



D05219
D00064
Q07644
Q05336

D07132

PREPARATION:

Disconnect the solenoid connector from the automatic transmission.

CHECK:

Check the harness and connector between terminal S1 or S2 of ECM and terminal S1 or S2 of solenoid connector.

OK:

There is no open and no short circuit.

OK

NG → **Repair or replace the harness or connector.**

3	Check shift solenoid valve No.1 or No.2.

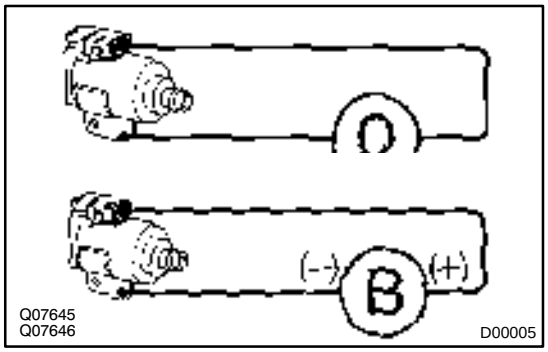

Q07645
Q07646
D00005

PREPARATION:

(a) Jack up the vehicle.
(b) Remove the oil pan.
(c) Disconnect the solenoid connector.
(d) Remove the shift solenoid valve No.1 or No.2.

CHECK:

(a) Measure resistance between solenoid connector and body ground.
(b) Connect positive ⊕ lead to terminal of solenoid connector, negative ⊖ lead to solenoid body.

OK:

(a) Resistance: 11 – 15 Ω
(b) The solenoid makes an operating noise.

NG → **Replace the solenoid valve.**

OK

Repair or replace the solenoid wire.

DTC	P0770	Shift Solenoid E Malfunction (Shift Solenoid Valve SL)

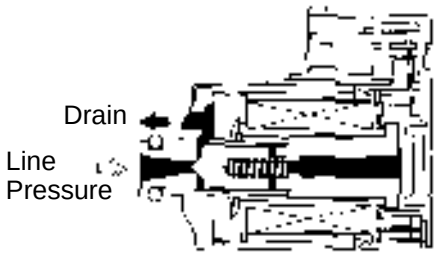

Q06995

SYSTEM DESCRIPTION

The ECM uses the signals from the Throttle position sensor, Air–flow meter and crankshaft position sensor to monitor the engagement condition of the lock–up clutch.

Then the ECM compares the engagement condition of the lock–up clutch with the lock–up schedule in the ECM memory to detect mechanical trouble of the shift solenoid valve SL, valve body and torque converter clutch.

DTC No.	DTC Detecting Condition	Trouble Area
P0770	Lock–up does not occur when driving in the lock–up range (normal driving at 80 km/h [50 mph]), or lock–up remains ON in the lock–up OFF range. (2–trip detection logic)	• Shift solenoid valve SL is stuck open or closed. • Valve body blocked up or stuck. • Lock–up clutch

INSPECTION PROCEDURE

1	Check shift solenoid valve SL operation.

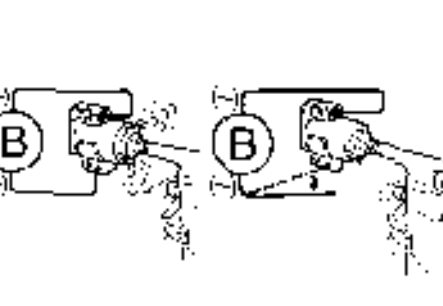

Q07640

PREPARATION:

(a) Remove the oil pan.

(b) Remove the shift solenoid valve SL.

CHECK:

(a) Applying 490 kPa (5 kgf/cm^2, 71 psi) of compressed air, check that the solenoid valve does not leak air.

(b) When battery voltage is supplied to the shift solenoid valve, check that the solenoid valve opens.

OK:

(a) Solenoid valve does not leak air.

(b) Solenoid valve opens.

NG → **Replace the solenoid valve SL.**

OK

2	**Check valve body (See page DI–363).**

NG → **Repair or replace the valve body.**

OK

Replace the torque converter clutch (See page AT–24 or AT–30).

DTC	P0773	Shift Solenoid E Electrical Malfunction (Shift Solenoid Valve SL)

CIRCUIT DESCRIPTION

The shift solenoid valve SL is turned ON and OFF by signals from the ECM to control the hydraulic pressure acting on the lock–up relay valve, which then controls operation of the lock–up clutch.

DTC No.	DTC Detecting Condition	Trouble Area
P0773	Either (a) or (b) is detected for 1 time. (2–trip detection logic) (a) Solenoid resistance is 8 Ω or less (short circuit) when the solenoid is energized. (b) Solenoid resistance is 100 kΩ or more (open circuit) when the solenoid is not energized.	• Open or short in shift solenoid valve SL circuit. • Shift solenoid valve SL • ECM

Fail safe function

If the ECM detects a malfunction, it turns the shift solenoid valve SL OFF.

WIRING DIAGRAM

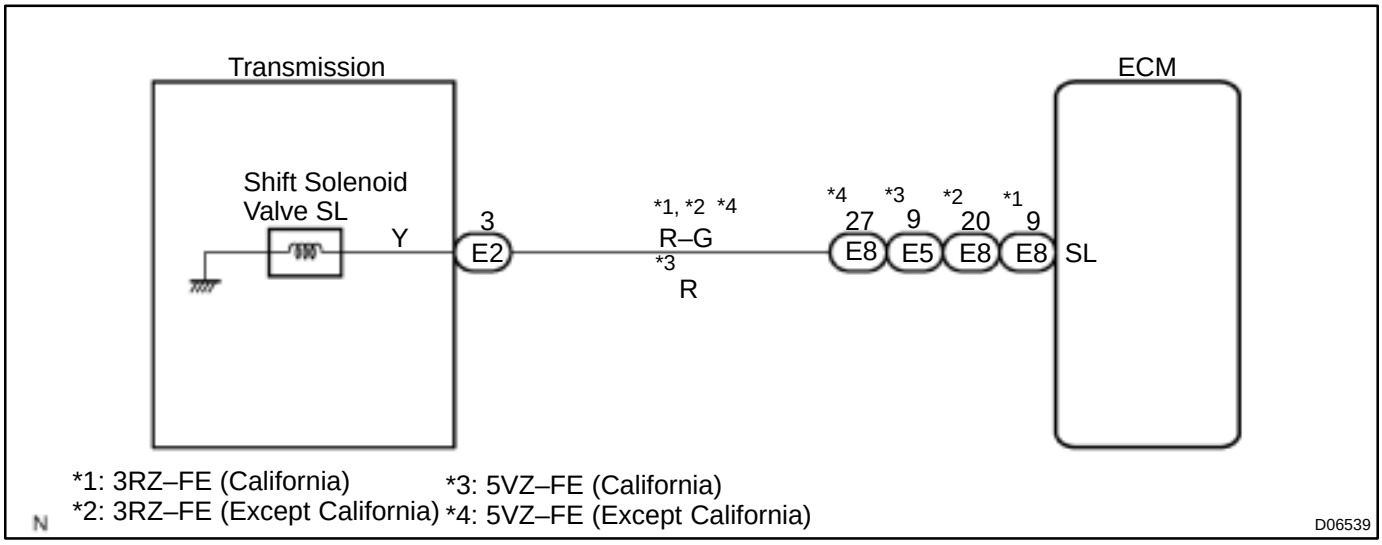

INSPECTION PROCEDURE

1	**Measure resistance between terminal SL of ECM and body ground.**

3RZ–FE (California) and 5VZ–FE (California)

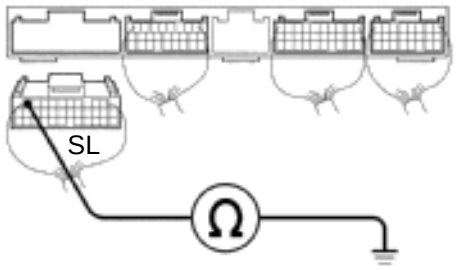

3RZ–FE (Except California)

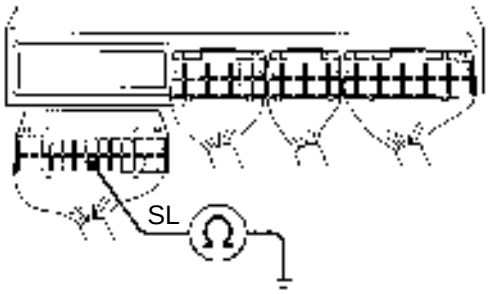

5VZ–FE (Except California)

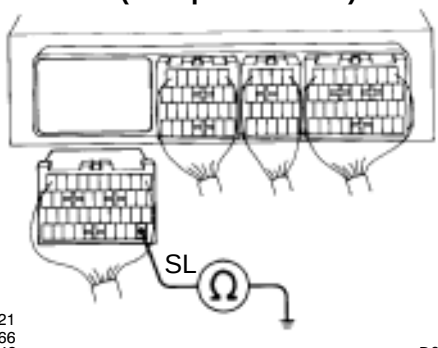

D05221
D00066
Q07648

D07133

PREPARATION:

Disconnect the connector from ECM.

CHECK:

Measure resistance between terminal SL of ECM and body ground.

OK:

Resistance: 11 – 15 Ω

NG

OK → **Check and replace the ECM (See page IN–28).**

2	**Check harness and connector between ECM and automatic transmission solenoid connector.**

3RZ–FE (California) and 5VZ–FE (California)

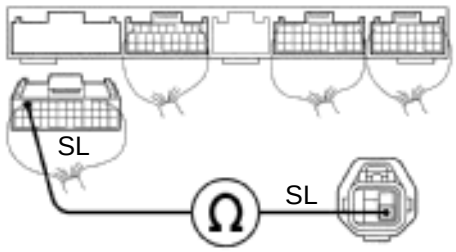

3RZ–FE (Except California)

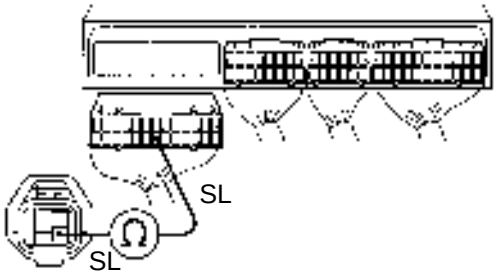

5VZ–FE (Except California)

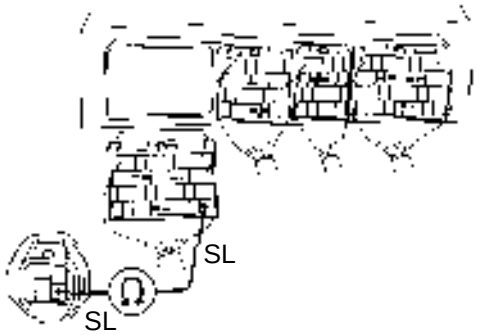



D05939
D00063
Q07650
Q05336

D07134

PREPARATION:

Disconnect the solenoid connector from the transmission.

CHECK:

Check the harness between terminal SL of ECM and terminal SL of automatic transmission solenoid connector.

OK:

There is no open or short circuit.

NG → **Repair or replace the harness or connector between ECM and automatic transmission solenoid connector.**

OK

3	Check shift solenoid valve SL.

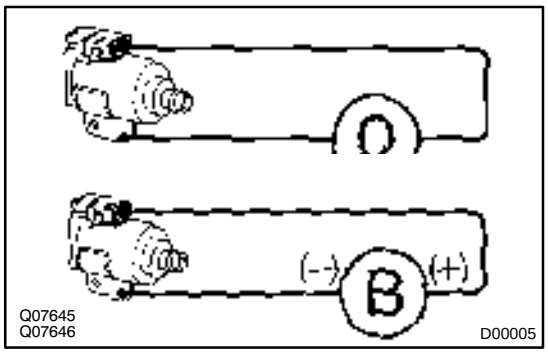

PREPARATION:

(a) Remove the oil pan.

(b) Remove the shift solenoid valve SL.

CHECK:

(a) Measure resistance between terminal SL of shift solenoid valve and solenoid body.

(b) Connect positive ⊕ lead to terminal of solenoid connector, negative ⊖ lead to solenoid body.

OK:

(a) Resistance: 11 – 15 Ω

(b) The shift solenoid valve SL makes operation noise.

NG → **Replace the shift solenoid valve SL.**

OK

Repair or replace the solenoid wire.

DI0SM–12

CUSTOMER PROBLEM ANALYSIS CHECK

Transmission Control System Check Sheet	Inspector's Name :

Customer's Name		Registration No.	
		Registration Year	/ /
		Frame No.	
Date Vehicle Brought In	/ /	Odometer Reading	km mile

Date Problem Occurred	/ /
How Often Does Problem Occur?	☐ Continuous ☐ Intermittent (times a day)

Symptoms	☐ Vehicle does not move (☐ Any position ☐ Particular position)
	☐ No up–shift (☐ 1st → 2nd ☐ 2nd → 3rd ☐ 3rd → O/D)
	☐ No down–shift (☐ O/D → 3rd ☐ 3rd → 2nd ☐ 2nd → 1st)
	☐ Lock–up malfunction
	☐ Shift point too high or too low
	☐ Harsh engagement (☐ N → D ☐ Lock–up ☐ Any drive position)
	☐ Slip or shudder
	☐ No kick–down
	☐ Others ( )

Check Item	Malfunction Indicator Lamp	☐ Normal ☐ Remains ON

DTC Check	1st Time	☐ Normal code	☐ Malfunction code (Code)
	2nd Time	☐ Normal code	☐ Malfunction code (Code)

DI0SO–02

DIAGNOSTIC TROUBLE CODE CHART

If a DTC is displayed during the DTC check, check the circuit listed for that code in the table below and proceed to the page given.

DTC No. (See Page)	Detection Item	Trouble Area	MIL *	Memory
P0500 3RZ–FE: (DI–129) 5VZ–FE (DI–294)	Vehicle Speed Sensor Malfunction (No.1 Vehicle Speed Sensor)	• Open or short in No.1 vehicle speed sensor circuit • No.1 vehicle speed sensor • Combination meter • ECM	●	○
P0710 (DI–369)	Transmission Fluid Temperature Sensor Malfunction (ATF Temperature Sensor)	• Open or short in ATF temperature sensor circuit • ATF temperature sensor • ECM	●	○
P0750 (DI–371)	Shift Solenoid A Malfunction (Shift Solenoid Valve No.1)	• Shift solenoid valve No.1 is stuck open or closed • Valve body is blocked up or stuck	●	○
P0753 (DI–373)	Shift Solenoid A Electrical Malfunction (Shift Solenoid Valve No.1)	• Open or short in shift solenoid valve No.1 circuit • Shift solenoid valve No.1 • ECM	●	○
P0755 (DI–371)	Shift Solenoid B Malfunction (Shift Solenoid Valve No.2)	• Shift solenoid valve No.2 is stuck open or closed • Valve body is blocked up or stuck	●	○
P0758 (DI–373)	Shift Solenoid B Electrical Malfunction (Shift Solenoid Valve No.2)	• Open or short in shift solenoid valve No.2 circuit • Shift solenoid valve No.2 • ECM	●	○
P0770 (DI–378)	Shift Solenoid E Malfunction (Shift Solenoid Valve SL)	• Shift solenoid valve SL is stuck open or closed • Valve body is blocked up or stuck • Lock–up clutch	●	○
P0773 (DI–380)	Shift Solenoid E Electrical Malfunction (Shift Solenoid Valve SL)	• Open or short in shift solenoid valve SL circuit • Shift solenoid valve SL • ECM	●	○
P1520 3RZ–FE: (DI–384) 5VZ–FE (DI–319)	Stop Light Switch Signal Malfunction	• Short in stop light switch signal circuit • Stop light switch • ECM	●	○
P1700 (DI–385)	Vehicle Speed Sensor No.2 Malfunction (No.2 Vehicle Speed Sensor)	• Open or short in No.2 vehicle speed sensor circuit • No.2 vehicle speed sensor • ECM	●	○
P1780 (DI–389)	Park/Neutral Position Switch Malfunction	• Short in park/neutral position switch circuit • Park/neutral position switch • ECM	●	○

* : ●...MIL light up

AUTOMATIC TRANSMISSION (A340E, A340F)

DI0SL–02

HOW TO PROCEED WITH TROUBLESHOOTING

Items inside ▱ are titles of pages in this manual, with the page number indicated in the bottom portion. See the indicated pages for detailed explanations.

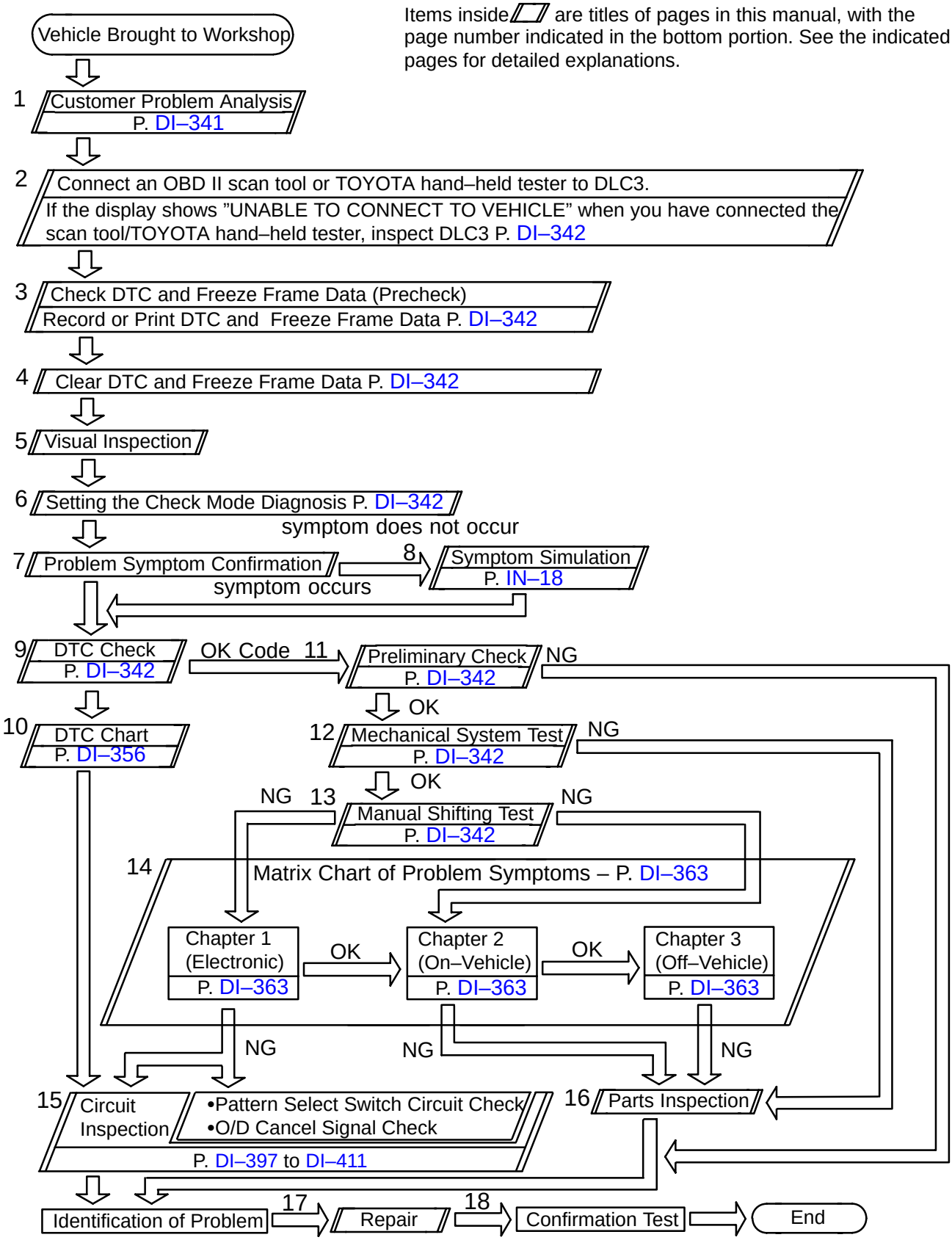

DI0SP–04

PARTS LOCATION

3RZ–FE

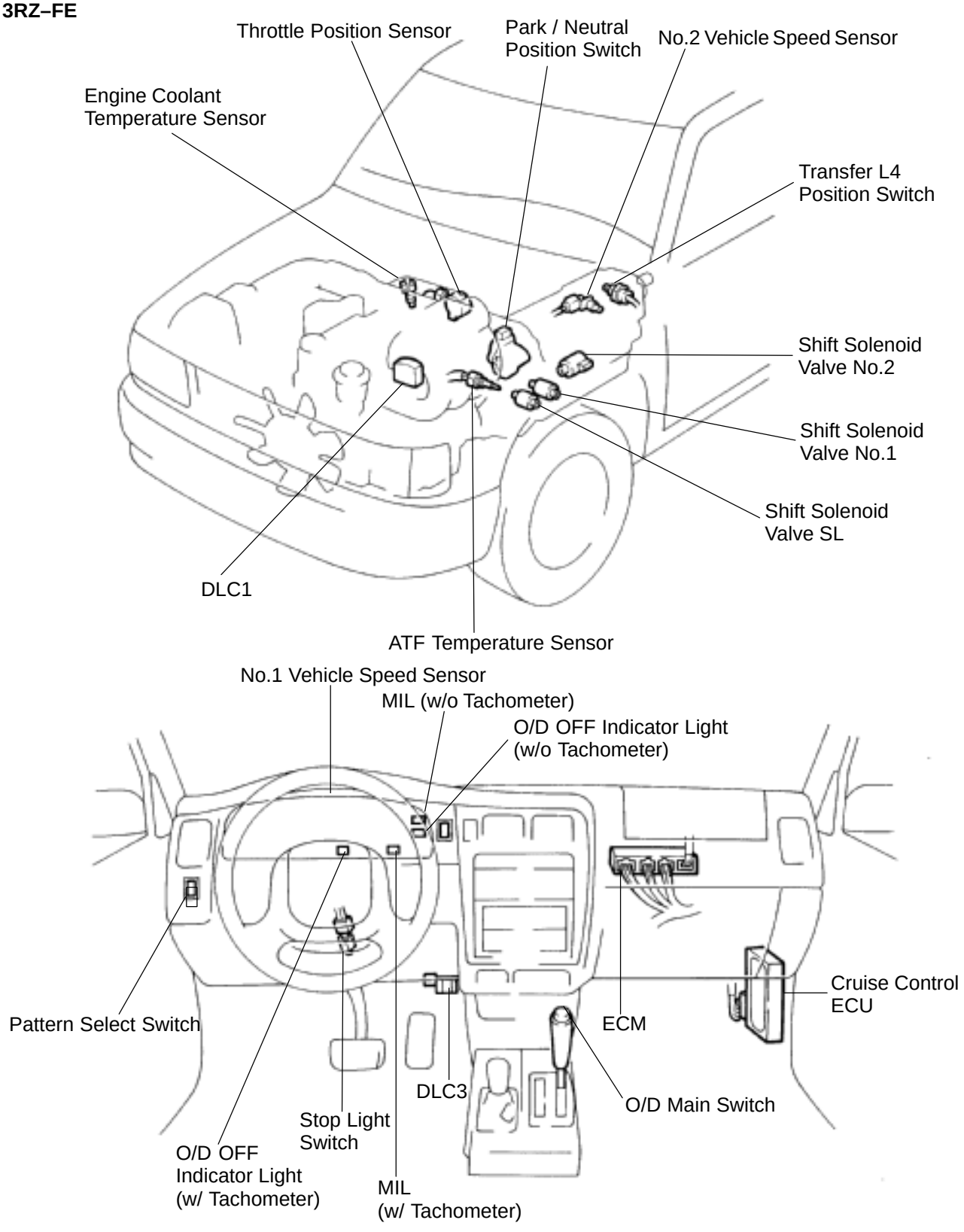

D00720

5VZ–FE

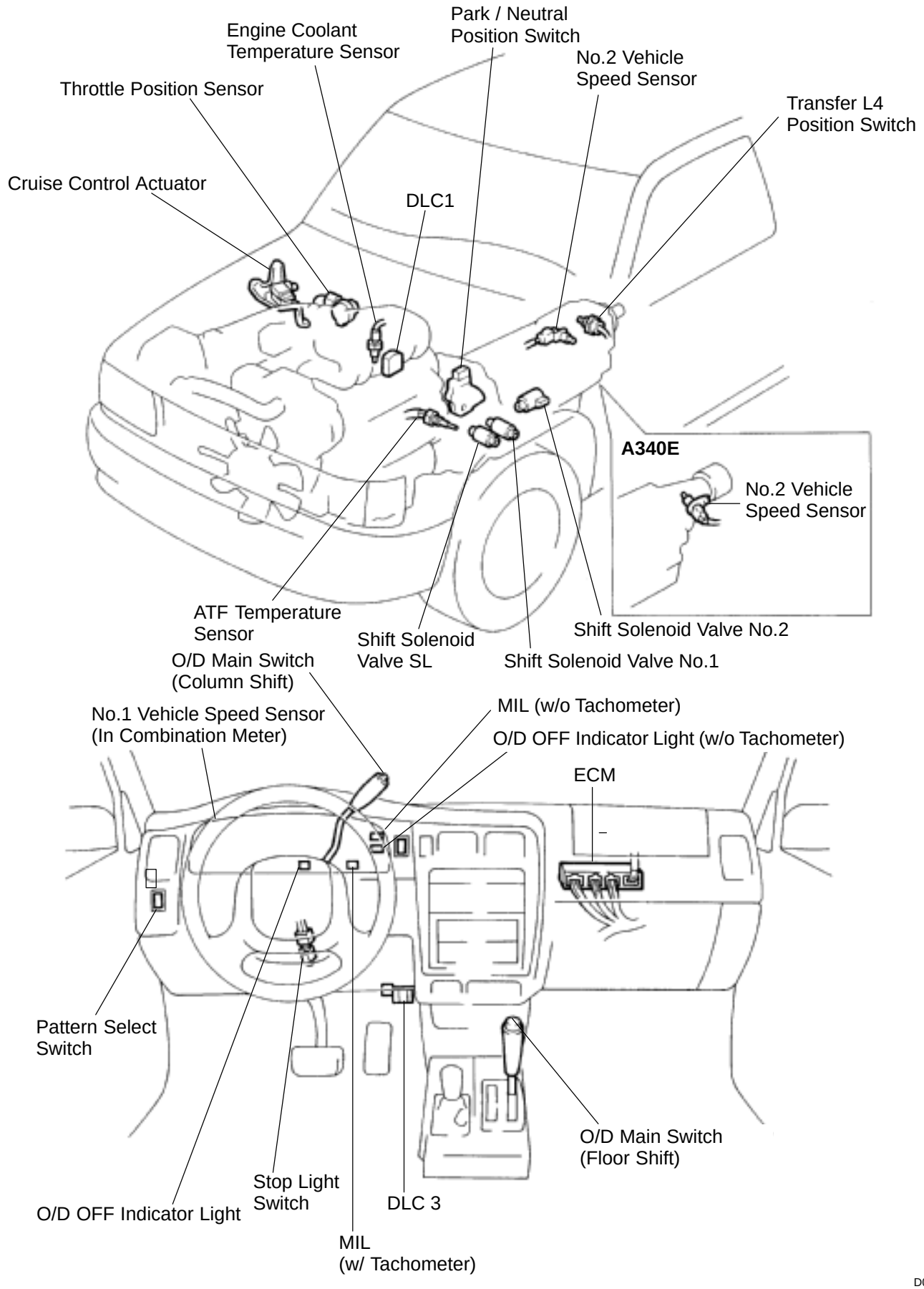
Park / Neutral Position Switch
Engine Coolant Temperature Sensor
No.2 Vehicle Speed Sensor
Throttle Position Sensor
Transfer L4 Position Switch
Cruise Control Actuator
DLC1
A340E
No.2 Vehicle Speed Sensor
ATF Temperature Sensor
Shift Solenoid Valve SL
Shift Solenoid Valve No.2
Shift Solenoid Valve No.1
O/D Main Switch (Column Shift)
No.1 Vehicle Speed Sensor (In Combination Meter)
MIL (w/o Tachometer)
O/D OFF Indicator Light (w/o Tachometer)
ECM
Pattern Select Switch
O/D Main Switch (Floor Shift)
Stop Light Switch
DLC 3
O/D OFF Indicator Light
MIL (w/ Tachometer)
D00721

DI19H–02

PRE–CHECK

1. DIAGNOSIS SYSTEM

(a) Description

- When troubleshooting OBD II vehicles, the only difference from the usual troubleshooting procedure is that you connect an OBD II scan tool complying with SAE J1987 or TOYOTA hand–held tester to the vehicle, and read off various data output from the vehicle's ECM.
  OBD II regulations require that the vehicle's on–board computer lights up the Malfunction Indicator Lamp (MIL) on the instrument panel when the computer detects a malfunction in the computer itself or in drive system components which affect vehicle emissions. In addition to the MIL lighting up when a malfunction is detected, the applicable DTCs prescribed by SAE J2012 are recorded in the ECM memory.
  (3RZ–FE: See page DI–14)
  (5VZ–FE: See page DI–192)
  If the malfunction only occurs in 3 trips, the MIL goes off but the DTCs remain recorded in the ECM memory.

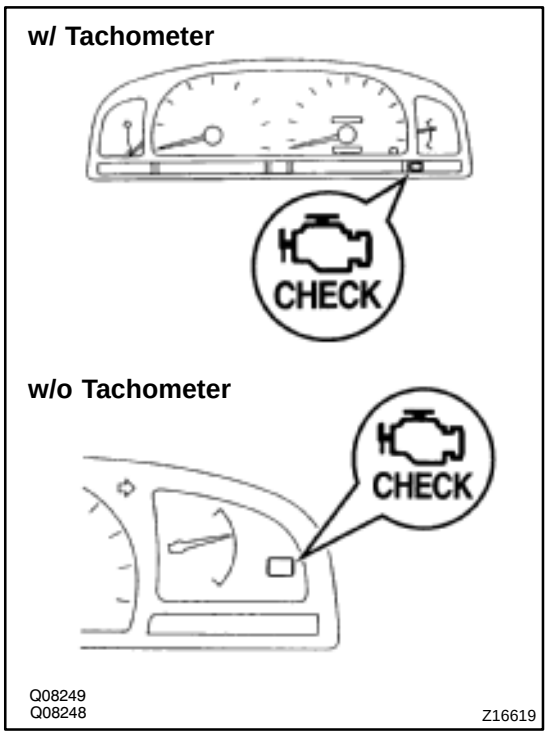

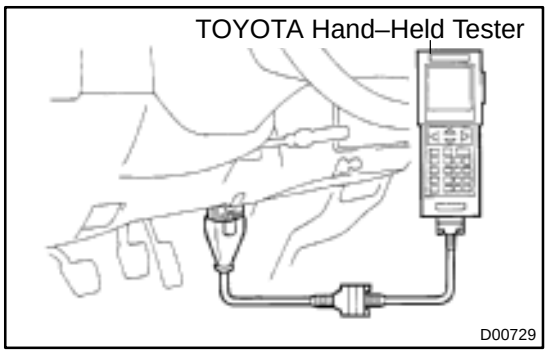

- To check the DTCs, connect an OBD II scan tool or TOYOTA hand–held tester to DLC3 on the vehicle. The OBD II scan tool or TOYOTA hand–held tester also enables you to erase the DTCs and check freeze frame data and various forms of engine data (For instruction book).
  DTCs include SAE controlled codes and Manufacturer controlled codes.
  SAE controlled codes must be set as the codes prescribed by the SAE, while Manufacturer controlled codes can be set freely by the manufacturer within the prescribed limits (See DTC chart on page DI–356).

- The diagnosis system operates in normal mode during normal vehicle use, and also has a check mode for technicians to simulate malfunction symptoms and perform troubleshooting. Most DTCs use 2 trip detection logic(*) to prevent erroneous detection. By switching the ECM to check mode when troubleshooting, the technician can cause the MIL to light up and for a malfunction that is only detected once or momentarily.
  (TOYOTA hand–held tester) (See page DI–342)
- *2 trip detection logic:
  When a logic malfunction is first detected, the malfunction is temporarily stored in the ECM memory. If the same malfunction is detected again during the 2nd test drive, this 2nd detection causes the MIL to light up .

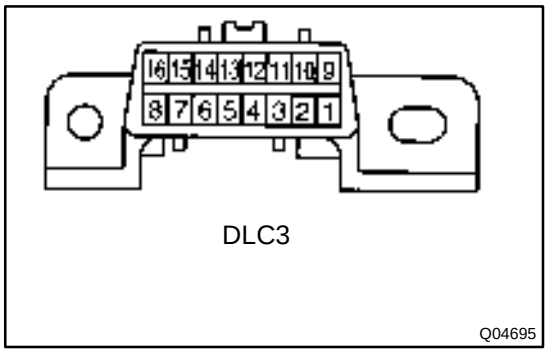

DLC3

(b) Inspect the DLC3.

- 3RZ–FE:
  The vehicle's ECM uses the ISO 9141–2 communication protocol. The terminal arrangement of DLC3 complies with SAE J1962 and matches the ISO 9141–2 format.
- 5VZ–FE:
  The vehicle's ECM uses the V.P.W. (Variable Pulse Width) for communication to comply with SAE J1850. The terminal arrangement of DLC3 complies with SAE J1962 and matches the V.P.W. format.

Tester connection	Condition	Specified condition
3RZ–FE: 7 (Bus ⊕ Line) ↔ 5 (Signal Ground) 5VZ–FE: 2 (Bus ⊕ Line) ↔ 5 (Signal Ground)	During communication	Pulse generation
4 (Chassis Ground) ↔ Body ground	Always	1 Ω or less
5 (Signal Ground) ↔ Body ground	Always	1 Ω or less
16 (B+) ↔ Body ground	Always	1 Ω or less
		9 – 14 V

HINT:
If your display shows ”UNABLE TO CONNECT TO VEHICLE” when you have connected the cable of OBD II scan tool or TOYOTA hand–held tester to DLC3, turned the ignition switch ON and operated the scan tool, there is a problem on the vehicle side or tool side.

- If communication is normal when the tool is connected to another vehicle, inspect DLC3 on the original vehicle.
- If communication is still not possible when the tool is connected to another vehicle, the problem is probably in the tool itself, so consult the Service Department listed in the tool’s instruction manual.

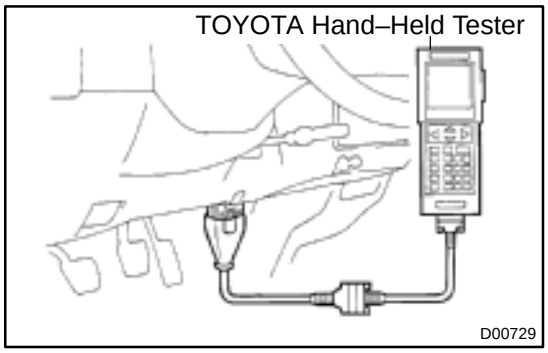

2. INSPECT DIAGNOSIS (NORMAL MODE)

(a) Check the MIL.

(1) The MIL comes on when the ignition switch is turned ON and the engine is not running.

HINT:
If the MIL does not light up, troubleshoot the combination meter (See page BE–38).

(2) When the engine is started, the MIL should go off. If the lamp remains on, the diagnosis system has detected a malfunction or abnormality in the system.

(b) Check the DTC.

NOTICE:
(TOYOTA hand–held tester only)When the diagnostic system is switched from normal mode to check mode, it erases all DTCs and freeze frame data recorded in normal mode. So before switching modes, always check the DTCs and freeze frame data, and note them down.

(1) Prepare an OBD II scan tool (complying with SAE J1978) or TOYOTA hand–held tester.

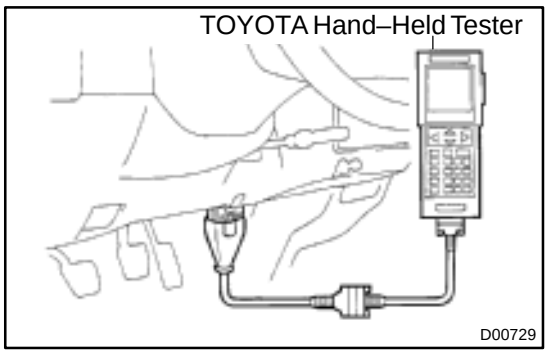

(2) Connect the OBD II scan tool or TOYOTA hand–held tester to DLC3 at the lower of the instrument panel.
(3) Turn the ignition switch ON and turn the OBD II scan tool or TOYOTA hand–held tester switch ON.
(4) Use the OBD II scan tool or TOYOTA hand–held tester to check the DTCs and freeze frame data and note them down (For operating instructions, see the OBD II scan tool's instruction book).
(5) See page DI–356 to confirm the details of the DTCs.

NOTICE:

When simulating symptoms with an OBD II scan tool (excluding TOYOTA hand–held tester) to check the DTCs, use normal mode. For codes on the DTCs chart subject to "2 trip detection logic", turn the ignition switch off after the symptoms have been simulated the 1st time. Then repeat the simulation process again. When the program has DTCs, the DTCs are recorded in the ECM.

3. INSPECT DIAGNOSIS (CHECK MODE)

HINT:

TOYOTA hand–held tester only: Compared to the normal mode, the check mode has high sensing ability to detect malfunctions. Furthermore, the same diagnostic items which are detected in Normal mode can also be detected in Check mode.

(a) Check the DTC.
(1) Check the initial conditions.
- Battery positive voltage 11 V or more.
- Throttle valve fully closed.
- Transmission in P position.
- Air conditioning switched off.

(2) Turn the ignition switch OFF.
(3) Prepare a TOYOTA hand–held tester.
(4) Connect the TOYOTA hand–held tester to DLC3 at the lower side of the instrument panel.
(5) Turn the ignition switch ON and switch the TOYOTA hand–held tester ON.

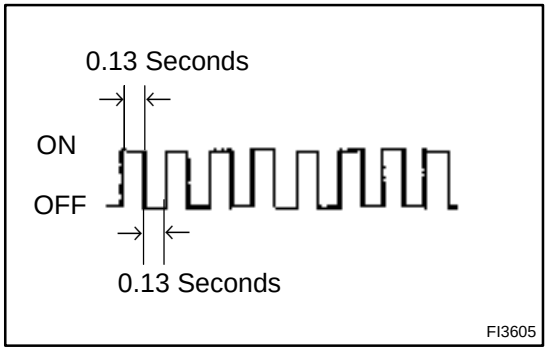

(6) Switch the TOYOTA hand–held tester from Normal mode to Check mode (Check that the MIL flashes).
(7) Start the engine (MIL goes out after the engine starts).
(8) Simulate the conditions of the malfunction described by the customer.

NOTICE:

Leave the ignition switch ON until you have checked the DTCs, etc.

(9) After simulating the malfunction conditions, use the TOYOTA hand–held tester diagnosis selector to check the DTCs and freeze frame data, etc..

HINT:
Take care not to turn the ignition switch OFF, as turning it off the diagnosis system switches from Check mode to Normal mode, so all DTCs, etc. are erased.

(10) After checking the DTC, inspect the applicable circuit.

(b) Clear the DTC.
The following actions will erase the DTC and freeze frame data. Operating an OBD II scan tool (complying with SAE J1978) or TOYOTA hand–held tester to erase the codes. (See the OBD II scan tool's instruction book for operating instructions.)

4. ROAD TEST

NOTICE:
Perform the test at normal operating ATF temperature 50 – 80 ˚C (122 – 176 ˚F).

(a) D position test (NORM and PWR pattern):
Shift into the D position and fully depress the accelerator pedal and check the following points.

(1) Check up–shift operation.
1 → 2, 2 → 3 and 3 → O/D up–shift takes place, at the shift point shown in the automatic shift schedule (See page SS–53).

HINT:

- O/D Gear Up–shift Prohibition Control (1. Coolant temp. is 60 ˚C (140 ˚F) or less. 2. If there is a 10 km/h (6 mph) difference between the set cruise control speed and vehicle speed.)
- O/D Gear Lock–up Prohibition Control (1. Brake pedal is depressed. 2. Coolant temp. is 60 ˚C (140 ˚F) or less.)

(2) Check for shift shock and slip.
Check for shock and slip at the 1 → 2, 2 → 3 and 3 → O/D up–shifts.

(3) Check for abnormal noises and vibration.
Run at the D position lock–up or O/D gear and check for abnormal noises and vibration.

HINT:
The check for the cause of abnormal noises and vibration must be done very thoroughly as it could also be due to loss of balance in the differential or torque converter clutch, etc.

(4) Check kick–down operation.
While running in the D position, 2nd, 3rd and O/D gears, check to see that the possible kick–down vehicle speed limits for 2 → 1, 3 → 2 and O/D → 3 kick–downs conform to those indicated on the automatic shift schedule (See page SS–53).

(5) Check abnormal shock and slip at kick–down.

(6) Check the lock–up mechanism.

- Drive in D position, O/D gear, at a steady speed (lock–up ON) of about 70 km/h (43 mph).
- Lightly depress the accelerator pedal and check that the engine speed does not change abruptly.

If there is a big jump in engine speed, there is no lock–up.

(b) 2 position test:

Shift into the 2 position and fully depress the accelerator pedal and check the following points.

(1) Check up–shift operation.

Check to see that the 1 → 2 up–shift takes place and that the shift point conforms to the automatic shift schedule (See page SS–53).

HINT:

There is no O/D up–shift and lock–up in the 2 position.

(2) Check engine braking.

While running in the 2 position and 2nd gear, release the accelerator pedal and check the engine braking effect.

(3) Check for abnormal noises during acceleration and deceleration, and for shock at up–shift and down–shift.

(c) L position test:

Shift into the 2 position and fully depress the accelerator pedal and check the following points.

(1) Check no up–shift.

While running in the L position, check that there is no up–shift to 2nd gear.

(2) Check engine braking.

While running in the L position, release the accelerator pedal and check the engine braking effect.

(3) Check for abnormal noises during acceleration and deceleration.

(d) R position test:

Shift into the R position and fully depress the accelerator pedal and check for slipping.

CAUTION:

Before conducting this test, ensure that the test area is free from people and obstruction.

(e) P position test:

Stop the vehicle on a grade (more than 5°) and after shifting into the P position, release the parking brake. Then, check to see that the parking lock pawl holds the vehicle in place.

5. BASIC INSPECTION

(a) Check the fluid level.

HINT:

- Drive the vehicle so that the engine and transmission are at normal operating temperature.
  Fluid temp.: 70 – 80 ˚C (158 – 176 ˚F)
- Only use the COOL range on the dipstick as a rough reference when the fluid is replaced or the engine does not run.

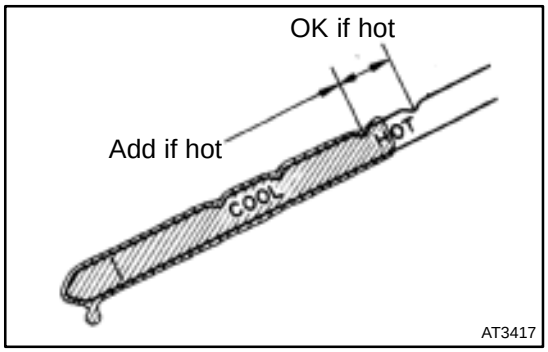

(1) Park the vehicle on a level surface and set the parking brake.
(2) With the engine idling and the brake pedal depressed, shift the shift lever into all positions from P to L position and return to P position.
(3) Pull out the dipstick and wipe it clean.
(4) Push it back fully into the pipe.
(5) Pull it out and check that the fluid level is in the HOT range.

If the level is not within the range, add new fluid.

Fluid type: ATF D–II or DEXRON®III (DEXRON®II)

NOTICE:

Do not overfill.

(b) Check the fluid condition.

If the fluid smells burnt or is black, replace it.

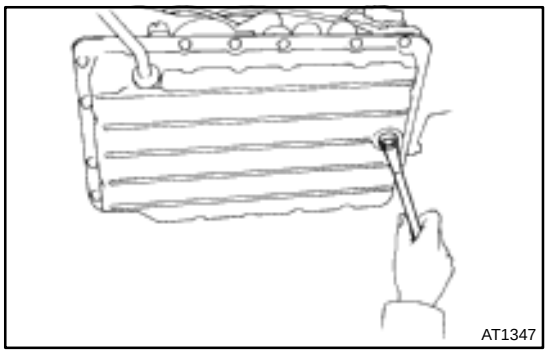

(c) Replace the ATF.
(1) Remove the drain plug and drain the fluid.
(2) Reinstall the drain plug securely.

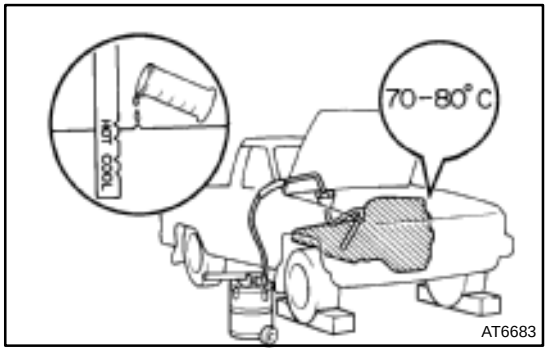

(3) With the engine OFF add new fluid through the oil filler pipe.

Fluid type: ATF D–II or DEXRON®III (DEXRON®II)

Capacity:

A340E: 1.6 liters (1.7 US qts, 1.4 Imp. qts)

A340F: 2.0 liters (2.1 US qts, 1.8 Imp. qts)

(4) Start the engine and shift the shift lever into all positions from P to L position and then shift into P position.

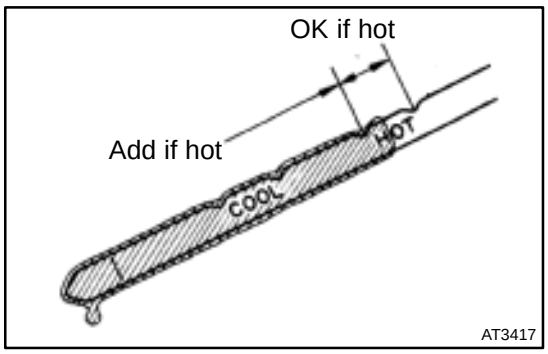

(5) With the engine idling, check the fluid level. Add fluid up to the COOL level on the dipstick.

(6) Check the fluid level at the normal operating temperature, 70 – 80 ˚C (158 – 176 ˚F), and add as necessary.

NOTICE:

Do not overfill.

(d) Check the fluid leaks.

Check for leaks in the transmission.

If there are leaks, it is necessary to repair or replace O–rings, FIPGs, oil seals, plugs or other parts.

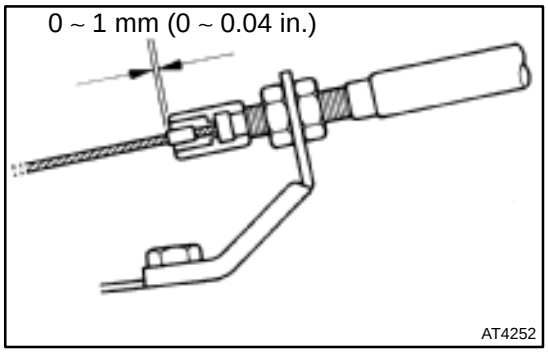

(e) Inspect and adjust the throttle cable.

(1) Check that the throttle valve is fully closed.

(2) Check that the inner cable is not slack.

(3) Measure the distance between the outer cable end and stopper on the cable.

Standard distance: 0 – 1 mm (0 – 0.04 in.)

If the distance is not standard, adjust the cable by the adjusting nuts.

(f) Column shift:

Inspect and adjust the shift lever position.

When shifting the shift lever from the N position to other positions, check that the lever can be shifted smoothly and accurately to each position and that the position indicator correctly indicates the position.

If the indicator is not aligned with the correct position, carry out the following adjustment procedures.

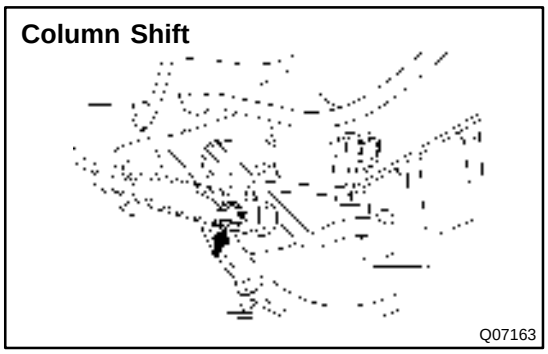

(1) Loosen the nut on the control shaft lever.
(2) Push the control shaft fully forward.
(3) Return the control shaft lever 2 notches to N position.
(4) Set the shift lever to N position.
(5) While holding the shift lever lightly toward the R position side, adjust the control lever nut.
(6) Tighten the control shaft lever nut.

Torque: 13 N·m (130 kgf·cm, 10 ft·lbf)

(7) Start the engine and make sure that the vehicle moves forward when shifting the lever from the N to D position and reverses when shifting it to the R position.

(g) Floor shift:

Inspect and adjust the shift lever position.

When shifting the shift lever from the N position to other positions, check that the lever can be shifted smoothly and accurately to each position and that the position indicator correctly indicates the position.

If the indicator is not aligned with the correct position, carry out the following adjustment procedures.

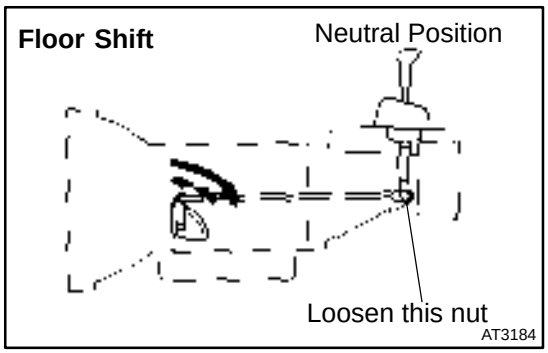

(1) Remove the nut on the shift lever.
(2) Push the control shaft lever fully downward.
(3) Return the control shaft lever 2 notches to N position.
(4) Set the shift lever to N position.
(5) While holding the shift lever lightly toward the R position side, adjust the control shaft lever nut.
(6) Tighten the control shaft lever nut.

Torque: 13 N·m (130 kgf·cm, 10 ft·lbf)

(7) Start the engine and make sure that the vehicle moves forward when shifting the lever from the N to D position and reverses when shifting it to the R position.

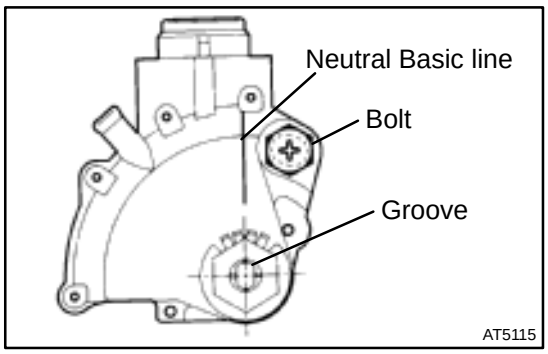

(h) Inspect and adjust the park/neutral position.

Check that the engine can be started with the shift lever only in the N or P position, but not in other positions.

If it is not as stated above, carry out the following adjustment procedure.

(1) Loosen the park/neutral position switch bolt and set the shift lever to the N position.

(2) Align the groove and neutral basic line.

(3) Hold the switch in position and tighten the bolt.

Torque: 13 N·m (130 kgf·cm, 10 ft·lbf)

For continuity inspection of the park/neutral position switch, see page DI–389.

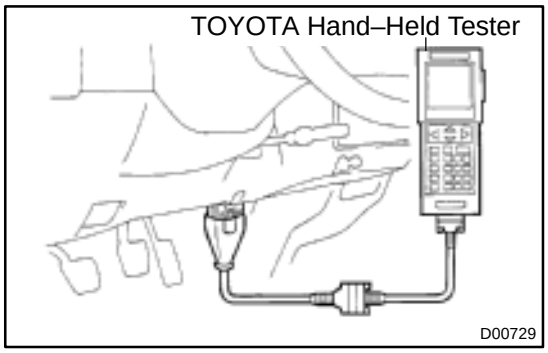

(i) Check the idle speed.

Connect OBD II scan tool or TOYOTA hand–held tester to the DLC3 and inspect the idle speed.

Idle speed (In N position and air conditioner OFF):
3RZ–FE: 700 ± 50 rpm
5VZ–FE: 700 ± 50 rpm

6. MECHANICAL SYSTEM TESTS

(a) Measure the stall speed.

The object of this test is to check the overall performance of the transmission and engine by measuring the stall speeds in the D and R positions.

NOTICE:

- **Do the test at normal operating fluid temperature 50 – 80 ˚C (122 – 176 ˚F).**
- **Do not continuously run this test longer than 5 seconds.**
- **To ensure safety, conduct this test in a wide, clear level area which provides good traction.**
- **The stall test should always be carried out in pairs. One technician should observe the conditions of wheels or wheel stoppers outside the vehicle while the other is doing the test.**

(1) Chock the 4 wheels.

(2) Connect an OBD II scan tool or TOYOTA hand–held tester to DLC3.

(3) Fully apply the parking brake.

(4) Keep your left foot depressing firmly on the brake pedal.

(5) Start the engine.

(6) Shift into the D position. Press all the way down on the accelerator pedal with your right foot. Quickly read the stall speed at this time.

Stall speed:
3RZ–FE: 1,950 ± 150 rpm
5VZ–FE: 2,250 ± 150 rpm

(7) Do the same test in R position.

Stall speed:
3RZ–FE: 1,950 ± 150 rpm
5VZ–FE: 2,250 ± 150 rpm

Evaluation:

Problem	Possible cause
(a) Stall speed low in D and R positions	• Engine output may be insufficient • Stator one–way clutch is operating properly HINT: If more than 600 rpm below the specified value, the torque converter clutch could be faulty.
(b) Stall speed high in D position	• Line pressure too low • Forward clutch slipping • No.2 one–way clutch not operating properly • O/D one–way clutch not operating properly
(c) Stall speed high in R position	• Line pressure too low • Direct clutch slipping • 1st & reverse brake slipping • O/D one–way clutch not operating properly
(d) Stall speed high in D and R positions	• Line pressure too low • Improper fluid level • O/D one–way clutch not operating properly

(b) Measure the time lag.

When the shift lever is shifted while the engine is idling, there will be a certain time lapse or lag before the shock can be felt. This is used for checking the condition of the O/D direct clutch, forward clutch, and 1st & reverse brake.

NOTICE:

- **Do the test at normal operating ATF temperature 50 – 80 °C (122 – 176 °F).**
- **Be sure to allow 1 minute interval between tests.**
- **Perform measurement 3 times and take the average value.**

(1) Fully apply the parking brake.

(2) Start the engine and check idle speed.

Idle speed (In N position and air conditioner OFF):

3RZ–FE: 700 ± 50 rpm

5VZ–FE: 700 ± 50 rpm

(3) Shift the shift lever from N to D position. Using a stop watch, measure the time it takes from when the lever is shifted until the shock is felt.

Time lag: N → D Less than 1.2 seconds

(4) In the same manner, measure the time lag for N → R.

Time lag: N → R Less than 1.5 seconds

Evaluation (If N → D time or N → R time lag is longer than the specified):

Problem	Possible cause
N → D time lag is longer	• Line pressure too low • Forward clutch worn • O/D one–way clutch not operating properly
N → R time lag is longer	• Line pressure too low • Direct clutch worn • 1st & reverse brake worn • O/D one–way clutch not operating properly

7. HYDRAULIC TEST

Measure the line pressure.

NOTICE:

- **Do the test at normal operation ATF temperature 50 – 80 °C (122 – 176 °F).**
- **The line pressure test should always be carried out in pairs. One technician should observe the conditions of wheels or wheel stoppers outside the vehicle while the other is doing the test.**
- **Be careful to prevent SST's hose from interfering with the exhaust pipe.**

(1) Warm up the ATF.

(2) Remove the test plug on the transmission case front left side and connect SST.
(See page AT–24 and AT–30 for the location to connect SST)

SST 09992–00095 (09992–00151, 09992–00271)

(3) Fully apply the parking brake and chock the 4 wheels.

(4) Start the engine and check idling speed.

(5) Keep your left foot pressing firmly on the brake pedal and shift into D position.

(6) Measure the line pressure when the engine is idling.

(7) Depress the accelerator pedal all the way down. Quickly read the highest line pressure when engine speed reaches stall speed.

NOTICE:

Release the accelerator pedal and stop test if the rear wheels begin to rotate before the engine speed reaches the specified stall speed.

(8) In the same manner, do the test in R position.

Specified line pressure (3RZ–FE):

Condition	D position kPa (kgf/cm^2, psi)	R position kPa (kgf/cm^2, psi)
Idling	363 – 422 (3.7 – 4.3, 53 – 61)	490 – 588 (5.0 – 6.0, 71 – 85)
Stall	932 – 1,177 (9.5 – 12.0, 135 – 171)	1,294 – 1,638 (13.2 – 16.7, 188 – 238)

Specified line pressure (5VZ–FE):

Condition	D position kPa (kgf/cm^2, psi)	R position kPa (kgf/cm^2, psi)
Idling	363 – 422 (3.7 – 4.3, 53 – 61)	608 – 696 (6.2 – 7.1, 88 – 101)
Stall	902 – 1,147 (9.2 – 11.7, 131 – 166)	1,432 – 1,942 (14.6 – 19.8, 208 – 282)

If the measured pressures are not up to the specified values, recheck the throttle cable adjustment and re-test.

Evaluation

Problem	Possible cause
If the measured values at all positions are higher	• Throttle cable out of adjustment • Throttle valve defective • Regulator valve defective
If the measured values at all positions are lower	• Throttle cable out of adjustment • Throttle valve defective • Regulator valve defective • Oil pump defective • O/D direct clutch defective
If pressure is low in the D position only	• D position circuit fluid leakage • Forward clutch defective
If pressure is low in the R position only	• R position circuit fluid leakage • Direct clutch defective • 1st & reverse brake defective

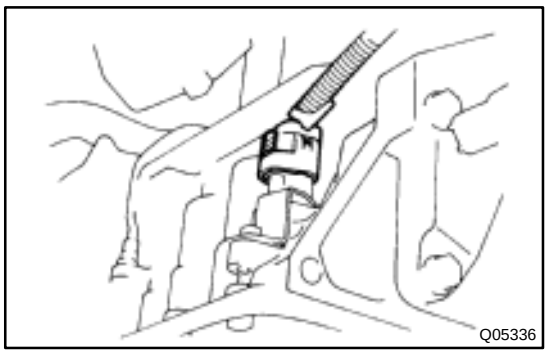

8. MANUAL SHIFTING TEST

HINT:

By this test, it can be determined whether the trouble is within the electrical circuit or is a mechanical problem in the transmission.

(a) Disconnect the solenoid wire.

(b) Inspect the manual driving operation.
Check that the shift and gear positions correspond with the table below.

Shift Position	Gear Position
D	O/D
2	3rd
L	1st
R	Reverse
P	Pawl Lock

HINT:

If the L, 2 and D position gear positions are difficult to distinguish, do the following road test.

- While driving, shift through the L, 2 and D positions. Check that the gear change corresponds to the shift position.
- If any abnormality is found in the above test, the problem is in the transmission itself.

(c) Connect the solenoid wire.

(d) Delete the DTC (See page DI–342).

DI0SR–02

PROBLEM SYMPTOMS TABLE

HINT:

If a normal code is displayed during the DTC check but the trouble still occurs, check the circuits for each symptom in the order given in the charts on the following pages and proceed to the page given for trouble-shooting.

The Matrix Chart is divided into 3 chapters.

When troubleshooting, check Chapter 1 first. If instructions are given in Chapter 1 to proceed to Chapter 2 or 3, proceed as instructed.

- If the instruction ”Proceed to next circuit inspection shown on matrix chart” is given in the flow chart for each circuit, proceed to the circuit with the next highest number in the table to continue the check.
- If the trouble still occurs even though there are no abnormalities in any of the other circuits, then check and replace the ECM.

1. CHAPTER 1: ELECTRONIC CIRCUIT MATRIX CHART

Symptom	Suspect Area	See page
No up–shift (A particular gear, from 1st to 3rd gear, is not –up shifted)	1. ECM	IN–28
No up–shift (3rd → O/D)	1. O/D main switch & O/D OFF indicator circuit 2. O/D cancel signal circuit 3. ECM	DI–400 DI–397 IN–28
No down–shift (O/D → 3rd)	1. O/D main switch & O/D OFF indicator circuit 2. O/D cancel signal circuit 3. ECM	DI–400 DI–397 IN–28
No down–shift (A particular gear, from 1st to 3rd gear, is not –down shifted)	1. ECM	IN–28
No lock–up	1. ECM	IN–28
No lock–up off	1. ECM	IN–28
Shift point too high or too low	1. Pattern select switch circuit 2. ECM	DI–406 IN–28
Up–shift to O/D from 3rd while O/D main switch is OFF	1. O/D main switch & O/D OFF indicator circuit 2. ECM	DI–400 IN–28
Up–shift to O/D from 3rd while engine is cold	1. ECM	IN–28
No kick–down	1. ECM	IN–28
Engine stalls when starting off or stopping	1. ECM	IN–28
No pattern select	1. Pattern select switch circuit 2. ECM	DI–406 IN–28

2. CHAPTER 2: ON–VEHICLE REPAIR
(★: A340E, A340F, A340H AUTOMATIC TRANSMISSION Repair Manual Pub. No. RM391U)
(★: A340F, A343F AUTOMATIC TRANSMISSION Repair Manual Pub. No. RM479U)

Symptom	Suspect Area	See page
Vehicle does not move in any forward position and reverse position	1. Throttle cable 2. Transmission control rod 3. Manual valve 4. Primary regulator valve 5. Parking lock pawl 6. Off–vehicle repair matrix chart	DI–342 DI–342 ★ ★ ★ –
Vehicle does not move in R position	1. Off–vehicle repair matrix chart	–
Vehicle does not move in particular position or positions (except R position)	1. Off–vehicle repair matrix chart	–
No up–shift (1st → 2nd)	1. 1–2 shift valve 2. Off–vehicle repair matrix chart	★ –
No up–shift (2nd → 3rd)	1. 2–3 shift valve 2. Off–vehicle repair matrix chart	★ –
No up–shift (3rd → O/D)	1. 3–4 shift valve 2. Off–vehicle repair matrix chart	★ –
No down–shift (O/D → 3rd)	1. 3–4 shift valve 2. Off–vehicle repair matrix chart	★ –
No down–shift (3rd → 2nd)	1. 2–3 shift valve 2. Off–vehicle repair matrix chart	★ –
No down–shift (2nd → 1st)	1. 1–2 shift valve 2. Off–vehicle repair matrix chart	★ –
No lock–up or No lock–up off	1. Lock–up control valve 2. Lock–up relay valve 3. Off–vehicle repair matrix chart	★ ★ –
Harsh engagement (N → D)	1. Accumulator control valve 2. Off–vehicle repair matrix chart	★ –
Harsh engagement (Lock–up)	1. Lock–up control valve 2. Lock–up relay valve 3. Off–vehicle repair matrix chart	★ ★ –
Harsh engagement (N → R)	1. Accumulator control valve 2. C_2 accumulator 3. Off–vehicle repair matrix chart	★ ★ –
Harsh engagement (N → L)	1. Low coast modulator valve	★
Harsh engagement (1st → 2nd / D position)	1. Accumulator control valve 2. B_2 accumulator	★ ★
Harsh engagement (1st → 2nd / 2 position)	1. Accumulator control valve 2. B_2 accumulator	★ ★
Harsh engagement (1st → 2nd → 3rd → O/D)	1. Accumulator control valve 2. Throttle valve	★ ★
Harsh engagement (2nd → 3rd)	1. Accumulator control valve 2. C_2 accumulator 3. Off–vehicle repair matrix chart	★ ★ –

Harsh engagement (3rd → O/D)	1. Accumulator control valve 2. Solenoid modulator valve 3. Off–vehicle repair matrix chart	★ ★ –
Harsh engagement (O/D → 3rd)	1. Accumulator control valve 2. C_0 accumulator 3. Off–vehicle repair matrix chart	★ ★ –
Slip or shudder (Forward and reverse)	1. Throttle cable 2. Transmission control rod 3. Oil strainer 4. Pressure relief valve 5. Off–vehicle repair matrix chart	DI–342 DI–342 ★ ★ –
Slip or shudder (Particular position)	1. Throttle cable 2. Transmission control rod 3. Off–vehicle repair matrix chart	DI–342 DI–342 –
No engine braking (1st / L position)	1. Low coast modulator valve 2. Off–vehicle repair matrix chart	★ –
No engine braking (2nd / 2 position)	1. 2nd coast modulator valve 2. Off–vehicle repair matrix chart	★ –
No kick–down	1. 1–2 shift valve 2. 2–3 shift valve	★ ★

3. CHAPTER 3: OFF–VEHICLE REPAIR
(★: A340E, A340F, A340H AUTOMATIC TRANSMISSION Repair Manual Pub. No. RM391U)
(★: A340F, A343F AUTOMATIC TRANSMISSION Repair Manual Pub. No. RM479U)

Symptom	Suspect Area	See page
Vehicle does not move in any forward position and reverse position	1. O/D one–way clutch (F_0) 2. O/D direct clutch (C_0) 3. O/D brake (B_0) 4. O/D planetary gear unit 5. Torque converter clutch	★ ★ ★ ★ ★
Vehicle does not move in R position	1. 2nd coast brake (B_1) 2. Front and rear planetary gear unit 3. Direct clutch (C_2) 4. 1st & reverse brake (B_3) 5. O/D direct clutch (C_0)	★ ★ ★ ★ ★
Vehicle does not move in D, 2 and L positions	1. Forward clutch (C_2)	★
Vehicle does not move in D, 2 positions	1. No.2 one–way clutch (F_2)	★
Vehicle does not move in 2 position	1. 1st & reverse (B_3)	★
Vehicle does not move in L position	1. 2nd brake (B_2) 2. 2nd coast brake (B_1) 3. Direct clutch (C_2)	★ ★ ★
No up–shift (1st → 2nd)	1. 2nd brake (B_2) 2. No. 1 one–way clutch (F_1)	★ ★
No up–shift (2nd → 3rd)	1. Direct clutch (C_2)	★
No up–shift (3rd → O/D)	1. O/D brake (B_0)	★
No down–shift (2nd → 1st)	1. 2nd coast brake (B_1) 2. 2nd brake (B_2)	★ ★
No lock–up or No lock–up off	1. Torque converter clutch	★
Harsh engagement (N → D)	1. Forward clutch (C_1)	★
Harsh engagement (N → R)	1. Direct clutch (C_2) 2. 1st and reverse brake (B_3)	★ ★
Harsh engagement (2nd → 3rd)	1. 2nd coast brake (B_1)	★
Harsh engagement (3rd → O/D)	1. O/D direct clutch (C_0) 2. O/D brake (B_0) 3. O/D planetary gear unit	★ ★ ★
Harsh engagement (O/D → 3rd)	1. O/D brake (B_0)	★
Harsh engagement (Lock–up)	1. Torque converter clutch	★
Slip or shudder (Forward and reverse / After warm–up)	1. Torque converter clutch 2. O/D one–way clutch (F_0) 3. O/D direct clutch (C_0)	★ ★ ★
Slip or shudder (Forward and reverse / Just after engine starts)	1. Torque converter clutch	★
Slip or shudder (R position)	1. Direct clutch (C_2) 2. 1st & reverse brake (B_3)	★ ★
Slip or shudder (1st)	1. Forward clutch (C_1) 2. No. 2 one–way clutch (F_2)	★ ★
Slip or shudder (2nd)	1. 2nd brake (B_2) 2. 2nd coast brake (B_1) 3. No. 1 one–way clutch (F_1)	★ ★ ★
Slip or shudder (3rd)	1. Direct clutch (C_2)	★
Slip or shudder (O/D)	1. O/D brake (B_0)	★
No engine braking (1st ~ 3rd: D position)	1. O/D direct clutch (C_0)	★

No engine braking (1st: L position)	1. 1st & reverse brake (B_3)	★
No engine braking (2nd: 2 position)	1. 2nd coast brake (B_1)	★
Poor acceleration (All position)	1. Torque converter clutch	★
Poor acceleration (O/D)	1. O/D direct clutch (C_0) 2. O/D planetary gear unit	★ ★
Poor acceleration (other than O/D)	1. O/D brake (B_0)	★
Poor acceleration (other than 2nd)	1. 2nd coast brake (B_1) 2. 2nd brake (B_2)	★ ★
Poor acceleration (1st and 2nd)	1. Direct clutch (C_2)	★
Poor acceleration (L and R positions)	1. 1st & reverse brake (B_3)	★
Poor acceleration (R position)	1. Forward clutch (C_1)	★
Engine stalls when starting off or stopping	1. Torque converter clutch	★

DI69Y–01

TERMINALS OF ECM

3RZ–FE (Carifornia):

ECM Terminals

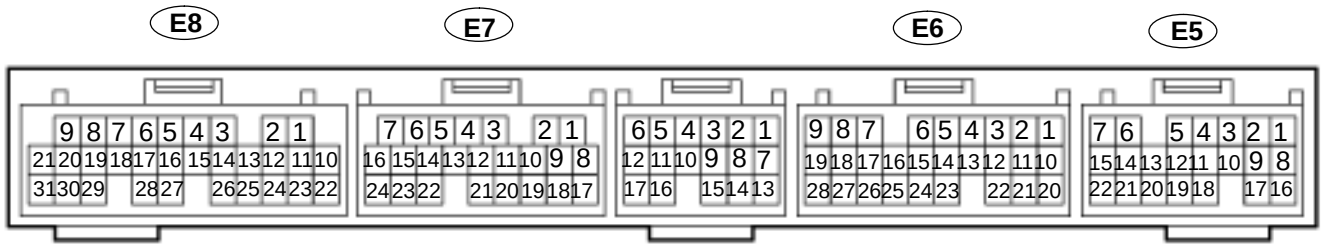

Symbols (Terminals No.)	Wiring Color	Condition	STD Voltage (V)
S1 – E1 (E8, 7 – E7, 17)	V–Y ↔ BR	IG ON	9 – 14
		IG ON and 1st or 2nd gear	9 – 14
		IG ON and 3rd or O/D gear	Below 1.5
S2 – E1 (E8, 8 – E7, 17)	LG ↔ BR	IG ON	Below 1.5
		IG ON and 2nd or 3rd gear	9 – 14
		IG ON and 1st or O/D gear	Below 1.5
SL – E1 (E8, 9 – E7, 17)	R–G ↔ BR	IG ON	Below 1.5
		IG ON and vehicle driving under lock–up position	9 – 14
$SP2^+$ – $SP2^-$ (E6, 14 – E6, 23)	Y–R ↔ W–R	IG ON and engine is running	Pulse signal is output Below 1.5 ↔ 4 – 6
OD1 – E1 (E5, 11 – E7, 17)	R–Y ↔ BR	IG ON	9 – 14
ODLP – E1 (E5, 10 – E7, 17)	L–O ↔ BR	IG ON and O/D OFF indicator light lights up	Below 3
		IG ON and O/D OFF indicator light goes off	9 – 14
OIL – E2 (E8, 26 – E7, 18)	Y–R ↔ BR–B	IG ON and ATF temperature: 115˚C (239˚F) or more	Below 1.5
L – E1 (E5, 3 – E7, 17)	V–W ↔ BR	IG ON and Shift lever L position	7.5 – 14
		IG ON and Shift lever other than L position	Below 1.5
2 – E1 (E5, 4 – E7, 17)	P ↔ BR	IG ON and Shift lever 2 position	7.5 – 14
		IG ON and Shift lever other than 2 position	Below 1.5
R – E1 (E5, 2 – E7, 17)	R–B ↔ BR	IG ON and Shift lever R position	7.5 – 14
		IG ON and Shift lever other than R position	Below 1.5
NSW – E1 (E5, 22 – E7, 17)	B–R ↔ BR	IG ON and Shift lever P or N position	Below 3
		IG ON and Shift lever other than P or N position	9 – 14
PWR – E1 (E5, 17 – E7, 17)	G ↔ BR	IG ON and Pattern select switch ”NORM”	Below 1.5
		IG ON and Pattern select switch ”PWR”	7.5 – 14
ODMS – E1 (E6, 25 – E7, 17)	G ↔ BR	IG ON	9 – 14
		IG ON and Press continuously O/D main switch	Below 1.5

5VZ–FE (Carifornia):

ECM Terminals

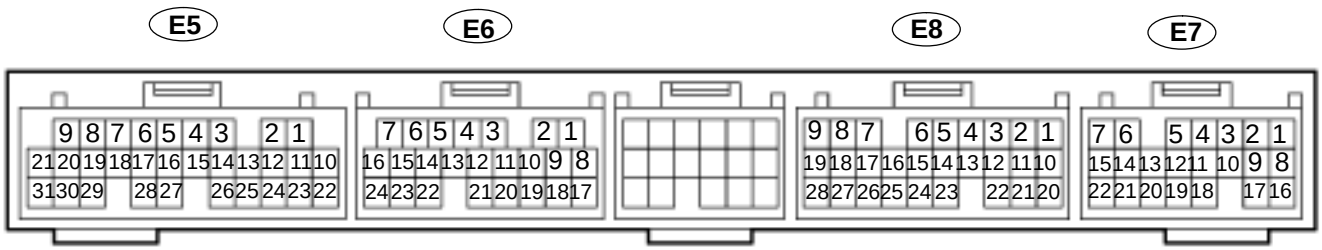

Symbols (Terminals No.)	Wiring Color	Condition	STD Voltage (V)
S1 – E1 (E8, 1 – E7, 17)	V ↔ BR	IG ON	9 – 14
		IG ON and 1st or 2nd gear	9 – 14
		IG ON and 3rd or O/D gear	Below 1.5
S2 – E1 (E5, 8 – E6, 17)	LG ↔ BR	IG ON	Below 1.5
		IG ON and 2nd or 3rd gear	9 – 14
		IG ON and 1st or O/D gear	Below 1.5
SL – E1 (E8, 9 – E7, 17)	R ↔ BR	IG ON	Below 1.5
		IG ON and vehicle driving under lock–up position	9 – 14
$SP2^+$ – $SP2^-$ (E8, 14 – E8, 26)	Y–R ↔ W–R	IG ON and engine is running	Pulse signal is output Below 1.5 ↔ 4 – 6
OD1 – E1 (E6, 24 – E7, 17)	R–Y ↔ BR	IG ON	9 – 14
ODLP – E1 (E6, 10 – E7, 17)	L–O ↔ BR	IG ON and O/D OFF indicator light lights up	Below 3
		IG ON and O/D OFF indicator light goes off	9 – 14
OIL – E2 (E7, 15 – E7, 18)	Y–R ↔ BR–B	IG ON and ATF temperature: 115°C (239°F) or more	Below 1.5
L – E1 (E6, 12 – E7, 17)	V–W ↔ BR	IG ON and Shift lever L position	7.5 – 14
		IG ON and Shift lever other than L position	Below 1.5
2 – E1 (E6, 3 – E7, 17)	P ↔ BR	IG ON and Shift lever 2 position	7.5 – 14
		IG ON and Shift lever other than 2 position	Below 1.5
R – E1 (E6, 2 – E7, 17)	R–B ↔ BR	IG ON and Shift lever R position	7.5 – 14
		IG ON and Shift lever other than R position	Below 1.5
NSW – E1 (E6, 20 – E7, 17)	B–R ↔ BR	IG ON and Shift lever P or N position	Below 3
		IG ON and Shift lever other than P or N position	9 – 14
ADD – E1 (E8, 22 – E7, 17)	G ↔ BR	IG ON and Pattern select switch ”NORM”	Below 1.5
		IG ON and Pattern select switch ”PWR”	7.5 – 14
ODMS – E1 (E6, 6 – E7, 17)	G ↔ BR	IG ON	9 – 14
		IG ON and Press continuously O/D main switch	Below 1.5

3RZ–FE (Except Carifornia):

ECM Terminals

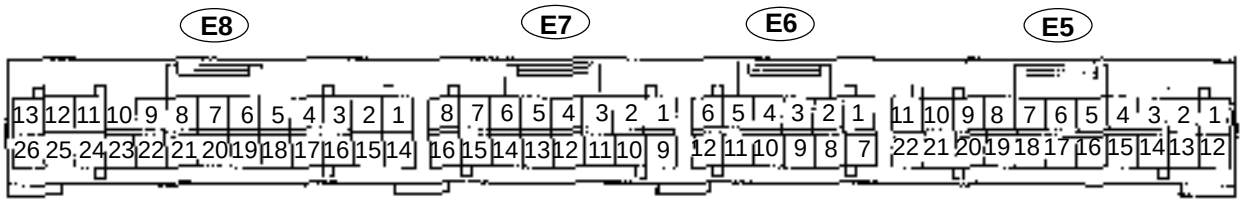

Symbols (Terminals No.)	Wiring Color	Condition	STD Voltage (V)
S1 – E1 (E8, 8 – E8, 24)	V–Y ↔ BR	IG ON	9 – 14
		IG ON and 1st or 2nd gear	9 – 14
		IG ON and 3rd or O/D gear	Below 1.5
S2 – E1 (E8, 21 – E8, 24)	LG ↔ BR	IG ON	Below 1.5
		IG ON and 2nd or 3rd gear	9 – 14
		IG ON and 1st or O/D gear	Below 1.5
SL – E1 (E8, 20 – E8, 24)	R–G ↔ BR	IG ON	Below 1.5
		IG ON and vehicle driving under lock–up position	9 – 14
$SP2^+$ – $SP2^-$ (E6, 9 – E6, 3)	Y–R ↔ W–R	IG ON and engine is running	Pulse signal is output Below 1.5 ↔ 4 – 6
OD1 – E1 (E5, 18 – E8, 24)	R–Y ↔ BR	IG ON	9 – 14
ODLP – E1 (E5, 5 – E8, 24)	L–O ↔ BR	IG ON and O/D OFF indicator light lights up	Below 3
		IG ON and O/D OFF indicator light goes off	9 – 14
OIL – E2 (E8, 16 – E7, 9)	Y–R ↔ BR–B	IG ON and ATF temperature: 115°C (239°F) or more	Below 1.5
L – E1 (E5, 15 – E8, 24)	V–W ↔ BR	IG ON and Shift lever L position	7.5 – 14
		IG ON and Shift lever other than L position	Below 1.5
2 – E1 (E5, 16 – E8, 24)	P ↔ BR	IG ON and Shift lever 2 position	7.5 – 14
		IG ON and Shift lever other than 2 position	Below 1.5
R – E1 (E5, 17 – E8, 24)	R–B ↔ BR	IG ON and Shift lever R position	7.5 – 14
		IG ON and Shift lever other than R position	Below 1.5
NSW – E1 (E5, 22 – E8, 24)	B–R ↔ BR	IG ON and Shift lever P or N position	Below 3
		IG ON and Shift lever other than P or N position	9 – 14
PWR – E1 (E5, 14 – E8, 24)	G ↔ BR	IG ON and Pattern select switch ”NORM”	Below 1.5
		IG ON and Pattern select switch ”PWR”	7.5 – 14
ODMS – E1 (E6, 1 – E8, 24)	G ↔ BR	IG ON	9 – 14
		IG ON and Press continuously O/D main switch	Below 1.5

5VZ–FE (Except Carifornia):

ECM Terminals

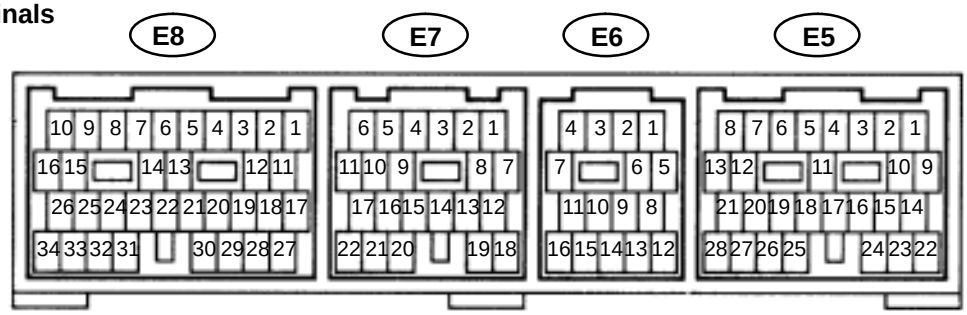

FI6810

Symbols (Terminals No.)	Wiring Color	Condition	STD Voltage (V)
S1 – E1 (E8, 11 – E6, 16)	V–Y ↔ BR	IG ON	9 – 14
		IG ON and 1st or 2nd gear	9 – 14
		IG ON and 3rd or O/D gear	Below 1.5
S2 – E1 (E8, 17 – E6, 16)	LG ↔ BR	IG ON	Below 1.5
		IG ON and 2nd or 3rd gear	9 – 14
		G ON and 1st or O/D gear	Below 1.5
SL – E1 (E8, 27 – E6, 16)	R–G ↔ BR	IG ON	Below 1.5
		IG ON and vehicle driving under lock–up position	9 – 14
$SP2^{+}$ – $SP2^{-}$ (E7, 9 – E7, 4)	Y–R ↔ W–R	IG ON and turn one rear wheel slowly	Pulse signal is output Below 1.5 ↔ 4 – 6
OD1 – E1 (E5, 7 – E6, 16)	R–Y ↔ BR	IG ON	9 – 14
ODLP – E1 (E5, 6 – E6, 16)	L–O ↔ BR	IG ON and O/D main switch ON (O/D OFF)	Below 3
		IG ON and O/D main switch OFF (O/D ON)	9 – 14
OIL – E2 (E8, 30 – E7, 22)	Y–R ↔ BR–B	IG ON and ATF temperature: 115°C (239°F) or more	Below 1.5
L – E1 (E5, 1 – E6, 16)	V–W ↔ BR	IG ON and Shift lever L position	7.5 – 14
		IG ON and Shift lever other than L position	Below 1.5
2 – E1 (E5, 10 – E6, 16)	P ↔ BR	IG ON and Shift lever 2 position	7.5 – 14
		IG ON and Shift lever other than 2 position	Below 1.5
R – E1 (E5, 15 – E6, 16)	R–B ↔ BR	IG ON and Shift lever R position	7.5 – 14
		IG ON and Shift lever other than R position	Below 1.5
NSW – E1 (E8, 14 – E6, 16)	B–R ↔ BR	IG ON and Shift lever P or N position	Below 3
		IG ON and Shift lever other than P or N position	9 – 14
PWR – E1 (E7, 12 – E6, 16)	G ↔ BR	IG ON and Pattern select switch ”NORM”	Below 1.5
		IG ON and Pattern select switch ”PWR”	7.5 – 14
ODMS – E1 (E5, 22 – E6, 16)	G ↔ BR	IG ON	9 – 14
		IG ON and Press continuously O/D main switch	Below 1.5

DI6WM–01

ECM Power Source Circuit

CIRCUIT DESCRIPTION

When the ignition switch is turned ON, battery positive voltage is applied to coil, closing the contacts of the EFI main relay (Marking: EFI) and supplying power to terminal +B of the ECM.

WIRING DIAGRAM

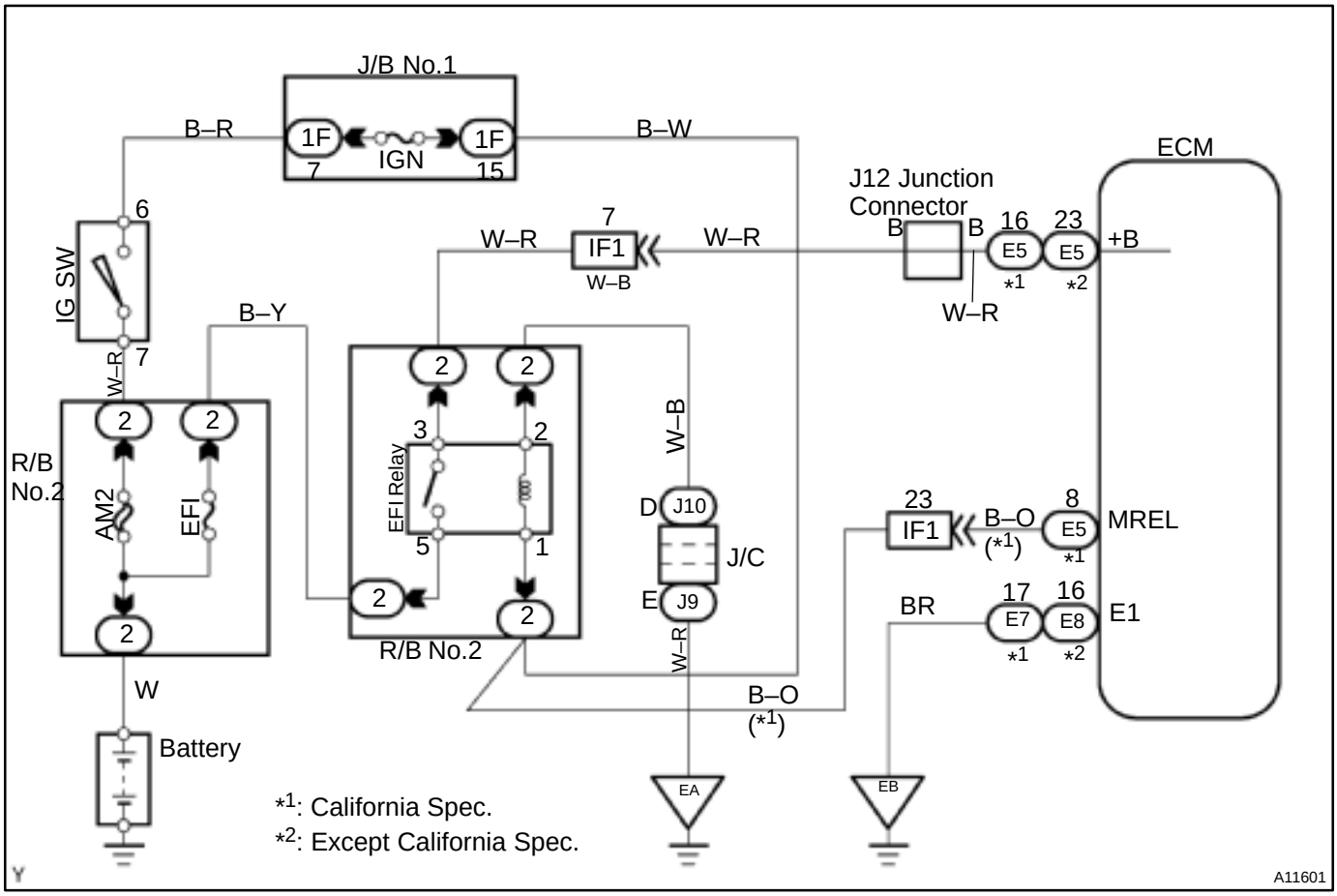

INSPECTION PROCEDURE

1	**Check voltage between terminals +B and E1 of ECM connector.**

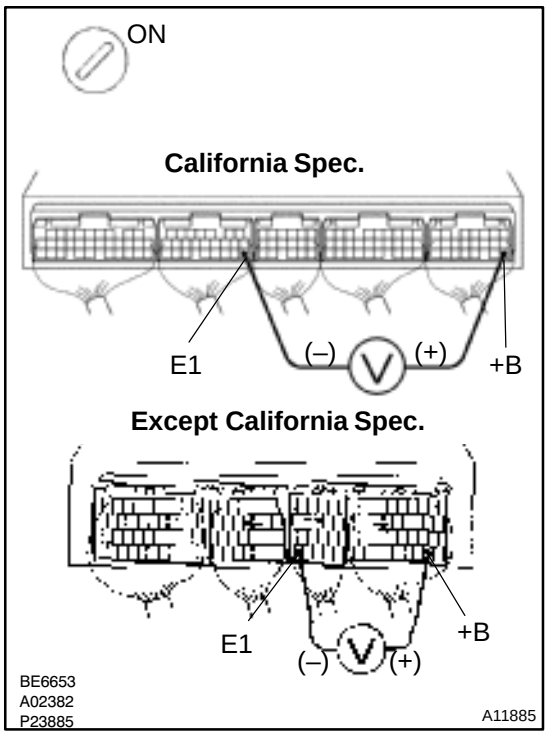

PREPARATION:

(a) Remove the glove compartment (See page SF–56).

(b) Turn the ignition switch ON.

CHECK:

Measure the voltage between terminals +B and E1 of the ECM connector.

OK:

Voltage: 9 – 14 V

OK	**Proceed to next circuit inspection shown on problem symptoms table (See page DI–202).**

NG

2	**Check for open in harness and connector between terminal E1 of ECM and body ground (See page IN–28).**

NG	**Repair or replace harness or connector.**

OK

3	**California Spec.:** **Check voltage between terminal MREL of ECM connector and body ground.**

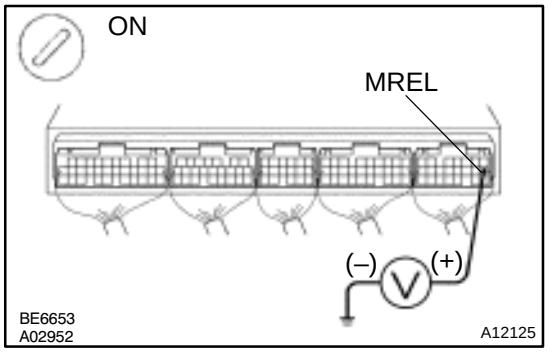

PREPARATION:
Turn the ignition switch ON.
CHECK:
Measure the voltage between terminal MREL of the ECM connector and body ground.
OK:
Voltage: 9 – 14 V

NG → **Check and replace ECM (See page IN–28).**

OK

4	**Check EFI main relay (Marking: EFI) (See page SF–41).**

NG → **Replace EFI main relay.**

OK

5	**Check EFI fuse (See page DI–322, step 2).**

NG → **Check for short in all harness and components connected to EFI fuse.**

OK

6	**Check for open harness and connector between EFI main relay (Marking: EFI) and battery, and EFI main relay and ECM (See page IN–28).**

NG → **Repair or replace harness or connector.**

OK

7	**Check IGN fuse.**

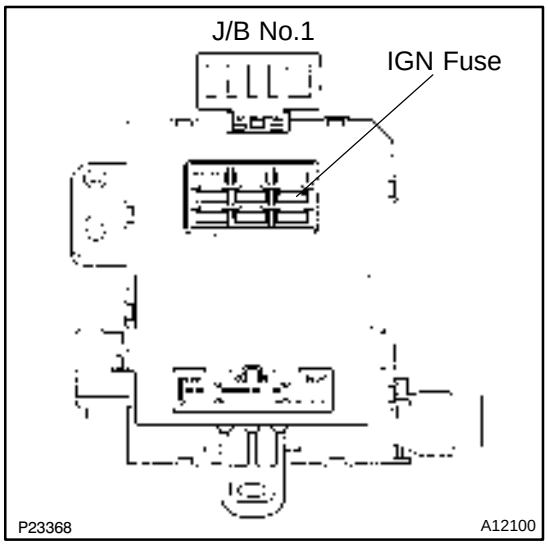

PREPARATION:
Remove the IGN fuse from the J/B No.1.
CHECK:
Check the continuity of the IGN fuse.
OK:
Continuity

NG → **Check for short in all harness and components connected to IGN fuse.**

OK

8	**Check ignition switch (See page BE–12).**

NG → **Replace ignition switch (See page BE–11).**

OK

Check for open in harness and connector between ignition switch and EFI main relay, and EFI main relay and body ground (See page IN–28).

DI17H–03

Fuel Pump Control Circuit

CIRCUIT DESCRIPTION

In the diagram below, when the engine is cranked, current flows from terminal ST of the ignition switch to the starter relay coil and also current flows to terminal STA of ECM (STA signal).
When the STA signal and NE signal are input to the ECM, Tr is turned ON, current flows to coil of the circuit opening relay, the relay switches on, power is supplied to the fuel pump and the fuel pump operates.
While the NE signal is generated (engine running), the ECM keeps Tr ON (circuit opening relay ON) and the fuel pump also keeps operating.

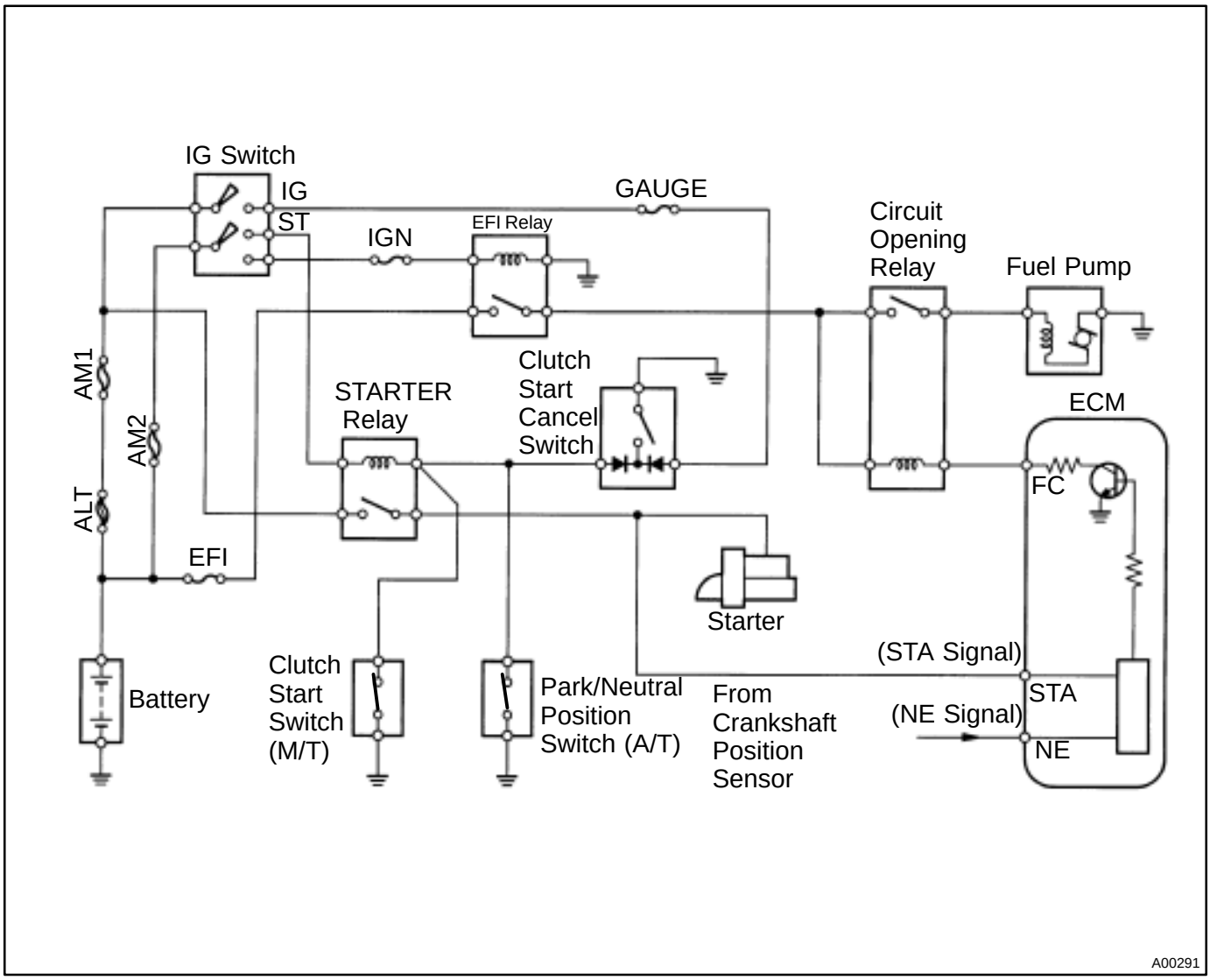

WIRING DIAGRAM

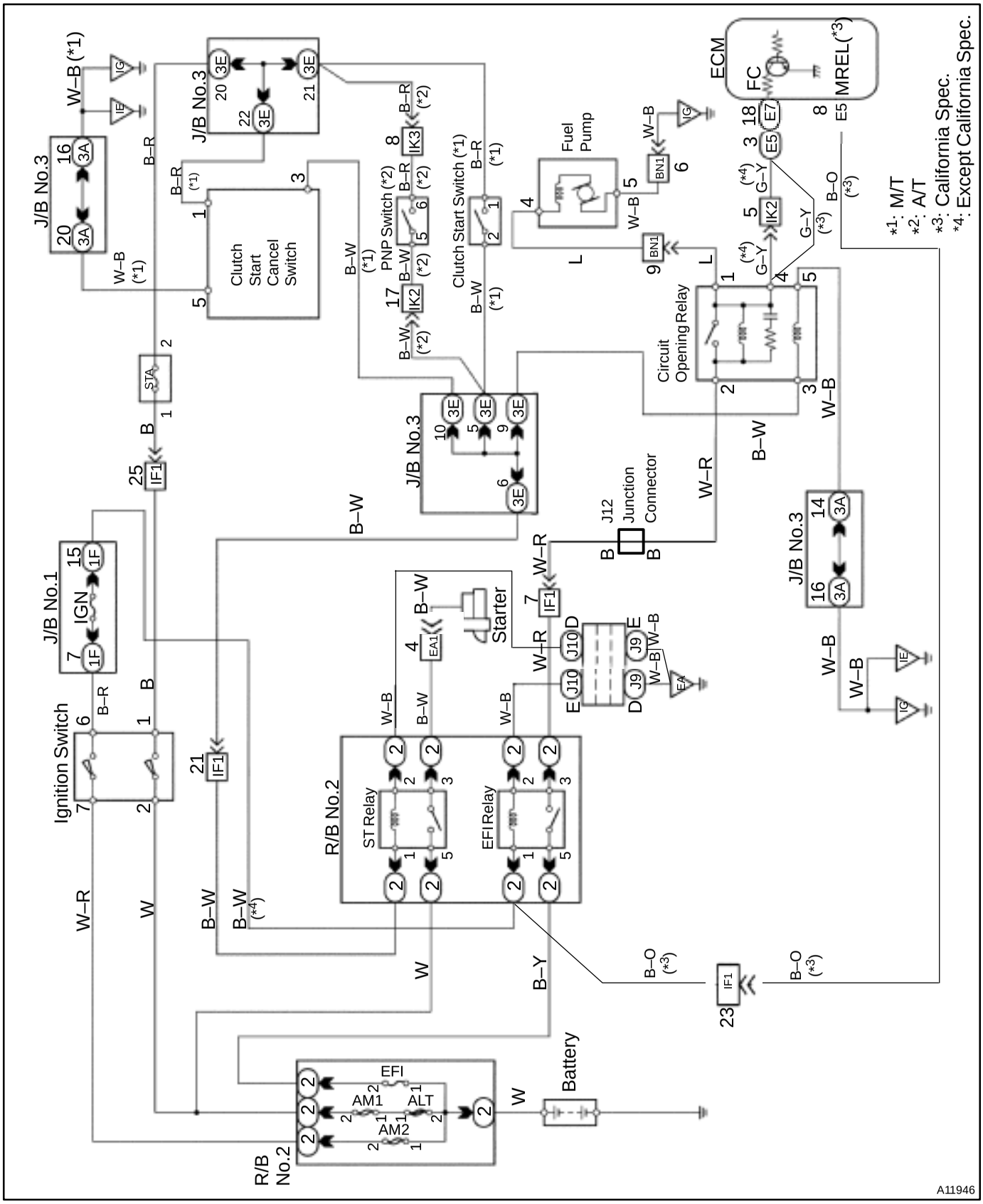

INSPECTION PROCEDURE
TOYOTA hand–held tester:

1	**Check operation of fuel pump.**

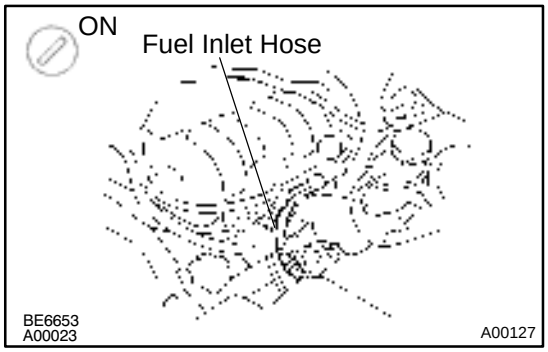

PREPARATION:

(a) Connect the TOYOTA hand–held tester to the DLC3.
(b) Turn the ignition switch ON and push the TOYOTA hand–held tester main switch ON.
(c) Use the ACTIVE TEST mode to operate the fuel pump.

CHECK:

Check for the fuel pressure in the fuel inlet hose when it is pinched off.

OK:

There is pressure in the fuel inlet hose.

HINT:

At this time, you will hear a fuel flowing noise.

OK	**Check for starter signal circuit (See page DI–326).**

NG

2	**Check for ECM power source circuit (See page DI–329).**

NG	**Repair or replace.**

OK

3	**Check circuit opening relay (See page SF–43).**

NG	**Replace circuit opening relay.**

OK

4	Check voltage between terminal FC of ECM and body ground.

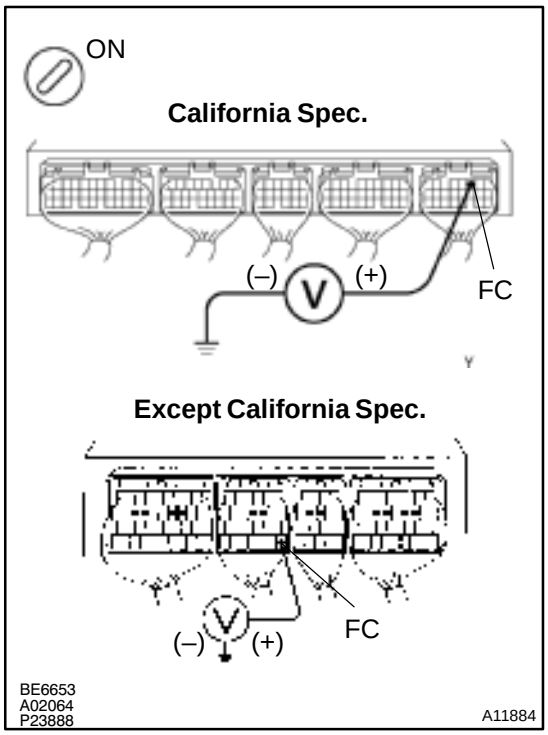

PREPARATION:

(a) Remove the glove compartment (See page SF–56).

(b) Turn the ignition switch ON.

CHECK:

Measure the voltage between terminal FC of the ECM connector and body ground.

OK:

Voltage: 9 – 14 V

OK → **Go to step 5.**

NG

Check for open in harness and connector between EFI main relay (Marking: EFI) and circuit opening relay, and circuit opening relay and ECM.

5	Check fuel pump (See page SF–5).

NG → **Repair or replace fuel pump.**

OK

6	Check for open in harness and connector between circuit opening relay and fuel pump, and fuel pump and body ground (See page IN–28).

NG → **Repair or replace harness or connector.**

OK

Check and replace ECM (See page IN–28).

OBD II scan tool (excluding TOYOTA hand–held tester):

1	**Check operation of fuel pump.**

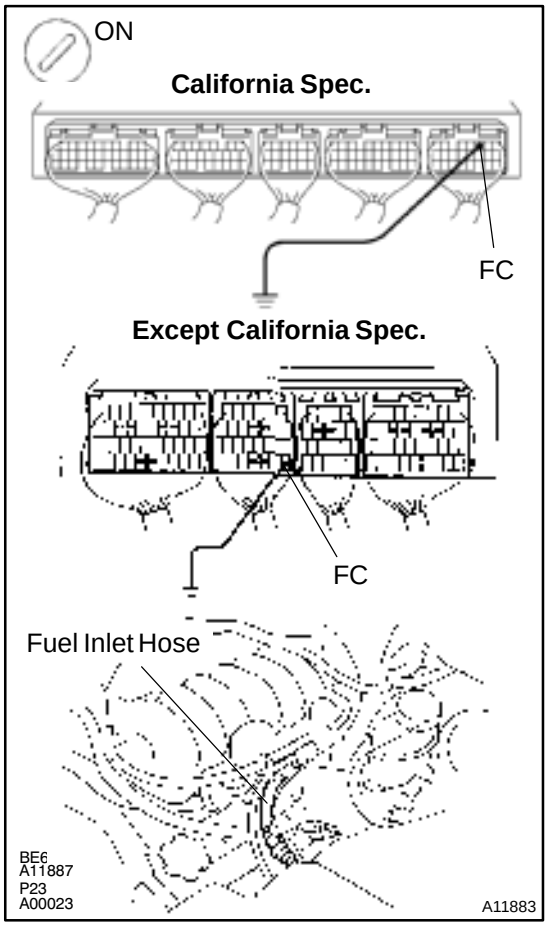

PREPARATION:

(a) Remove the glove compartment (See page SF–56).

(b) Turn the ignition switch ON.

CHECK:

(a) Connect between terminal FC of the ECM connector and body ground.

(b) Check for the fuel pressure in the inlet hose when it is pinched off.

OK:

There is pressure in the fuel inlet hose.

HINT:

At this time, you will hear a fuel flowing noise.

OK → **Check for starter signal circuit (See page DI–326).**

NG

2	**Check for ECM power source circuit (See page DI–329).**

NG → **Repair or replace.**

OK

3	**Check circuit opening relay (See page SF–43).**

NG → **Replace circuit opening relay.**

OK

4	**Check voltage between terminal FC of ECM connector and body ground.**

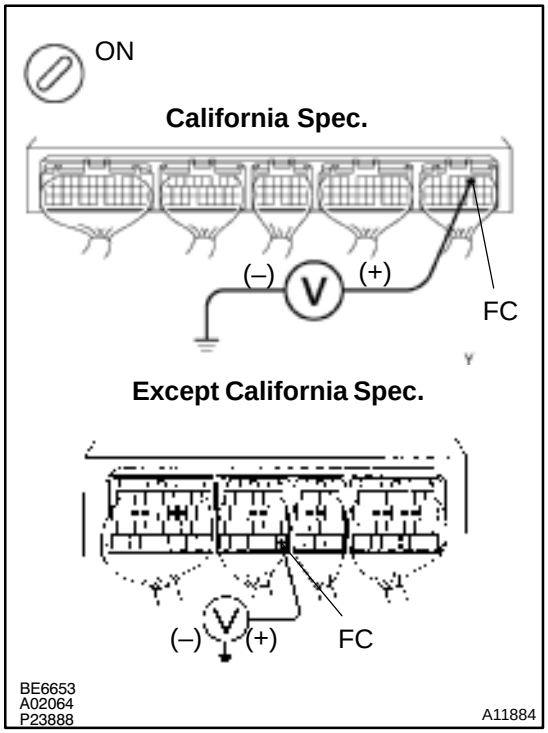

PREPARATION:

(a) Remove the glove compartment (See page SF–56).

(b) Turn the ignition switch ON.

CHECK:

Measure the voltage between terminal FC of the ECM connector and body ground.

OK:

Voltage: 9 – 14 V

OK → **Go to step 5.**

NG

Check for open in harness and connector between EFI main relay (Marking: EFI) and circuit opening relay, and circuit opening relay and ECM.

5	**Check fuel pump (See page SF–5).**

NG → **Repair or replace fuel pump.**

OK

6	**Check for open in harness and connector between circuit opening relay and fuel pump, and fuel pump and body ground (See page IN–28).**

NG → **Repair or replace harness or connector.**

OK ↓

Check and replace ECM (See page IN–28).

DI5CA–04

DTC	P1130	A/F Sensor Circuit Range/Performance Malfunction (Bank 1 Sensor 1) (California Spec.)

CIRCUIT DESCRIPTION

Refer to DTC P0125 on page DI–224.

DTC No.	DTC Detecting Condition	Trouble Area
P1130	Voltage output* of A/F sensor remains at 3.8 V or more, or 2.8 V or less, during engine running after engine is warmed up (2 trip detection logic) *: Output value changes at inside of ECM only	• Open or short in A/F sensor circuit • A/F sensor • Air induction system • Fuel pressure • Injector • ECM
	Voltage output* of A/F sensor does not change from 3.30 V, during engine running after engine is warmed up (2 trip detection logic) *: Output value changes at inside of ECM only	
	Open or short in A/F sensor circuit (2 trip detection logic)	

HINT:

- After confirming DTC P1130, use the OBD II scan tool or TOYOTA hand–held tester to confirm voltage output of the A/F sensor (AFS B1 S1/O2S B1 S1) from the CURRENT DATA.
- The A/F sensor's output voltage and the short–term fuel value can be read using the OBD II scan tool or TOYOTA hand–held tester.
- The ECM controls the voltage of AF1+ and AF1– terminals of ECM to the fixed voltage. Therefore, it is impossible to confirm the A/F sensor output voltage without OBD II scan tool or TOYOTA hand–held tester.
- OBD II scan tool (excluding TOYOTA hand–held tester) displays the one fifth of the A/F sensor output voltage which is displayed on the TOYOTA hand–held tester.

WIRING DIAGRAM

Refer to DTC P0125 on page DI–224.

CONFIRMATION DRIVING PATTERN

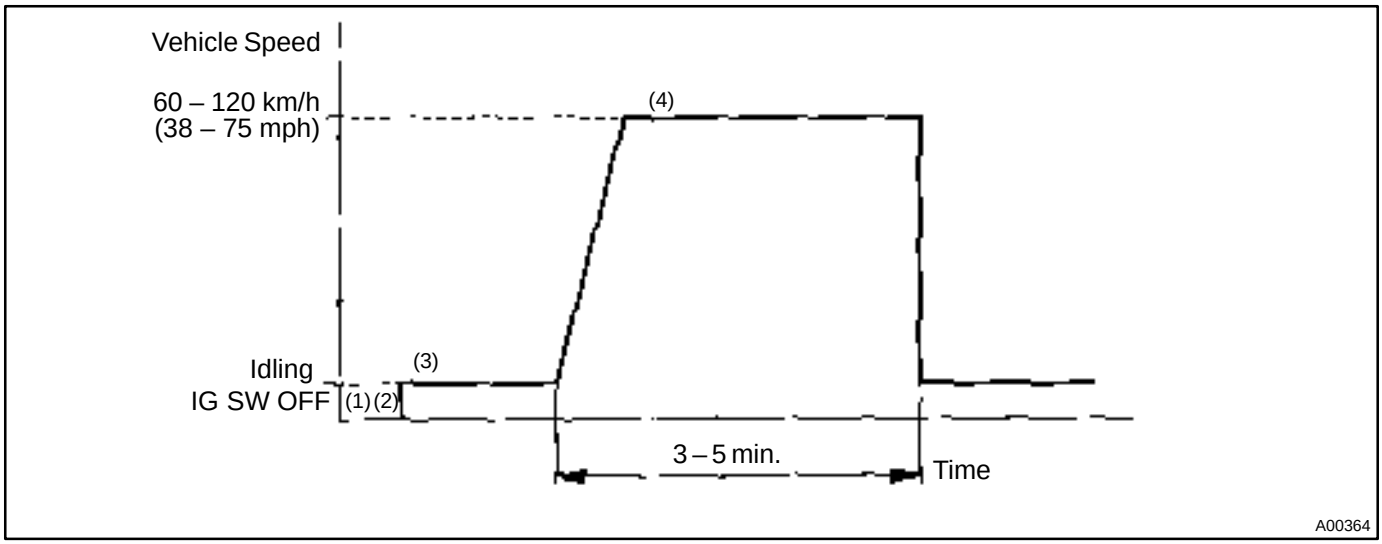

(1) Connect the TOYOTA hand–held tester to the DLC3.
(2) Switch the TOYOTA hand–held tester from the normal mode to the check mode (See page DI–182).
(3) Start the engine and warm it up with all the accessory switches OFF.
(4) Drive the vehicle at 60 – 120 km/h (38 – 75 mph) and the engine speed at 1,600 – 3,200 rpm for 3 – 5 min.

HINT:
If a malfunction exists, the MIL will light up during step (4).

NOTICE:

- **If the conditions in this test are not strictly followed, detection of the malfunction will not be possible.**
- **If you do not have a TOYOTA hand–held tester, turn the ignition switch OFF after performing steps (3) and (4), then perform steps (3) and (4) again.**

INSPECTION PROCEDURE

HINT:

- If DTC P1130 is displayed, check bank 1 sensor 1 circuit.
- Read frame freeze data using the TOYOTA hand–held tester or OBD II scan tool. Because freeze frame records the engine conditions when the malfunction is detected. When troubleshooting, it is useful for determining whether the vehicle was running or stopped, the engine was warmed up or not, the air–fuel ratio was lean or rich, etc. at the time of the malfunction.

1	**Are there any other codes (besides DTC P1130) being output?**

YES → **Go to relevant DTC chart (See page DI–192).**

NO

2	**Connect OBD II scan tool or TOYOTA hand–held tester, and read value for voltage output of A/F sensor.**

PREPARATION:

(a) Connect the OBD II scan tool or TOYOTA hand–held tester to the DLC3.
(b) Warm up the A/F sensor with the engine speed at 2,500 rpm for approx. 90 sec.

CHECK:

Read the voltage of the A/F sensor on the screen of OBD II scan tool or TOYOTA hand–held tester when you perform all the following conditions.

HINT:
The voltage of the AF1+ terminal of the ECM is fixed at 3.3 V and the voltage of the AF1– terminal is fixed at 3.0 V. Therefore, it is impossible to check the A/F sensor output voltage at the terminals (AF1+/AF1–) of the ECM.

OK:

Condition	A/F Sensor Voltage value
Engine idling	• Not remains at 3.30 V (0.660 V*) • Not remains at 3.8 V (0.76 V*) or more • Not remains at 2.8 V (0.56 V*) or less *: When you use the OBD II scan tool (excluding TOYOTA hand–held tester)
Engine racing	
Driving at engine speed 1,500 rpm or more and vehicle speed 40 km/h (25 mph) or more, and operate throttle valve open and close.	

HINT:

- During fuel enrichment, there is a case that the output voltage of the A/F sensor is below 2.8 V (0.56 V*), it is normal.
- During fuel cut, there is a case that the output voltage of the A/F sensor is above 3.8 V (0.76 V*), it is normal.
- If the output voltage of the A/F sensor remains at 3.30 V (0.660 V*) even after performing all the above conditions, the A/F sensor circuit may be open.
- If the output voltage of the A/F sensor remains at 3.8 V (0.76V*) or more, or 2.8 V (0.56 V*) or less even after performing all the above conditions, the A/F sensor circuit may be short.

*: When you use the OBD II scan tool (excluding TOYOTA hand–held tester).

OK → **Go to step 8.**

NG

3	**Check for open and short in harness and connector between ECM and A/F sensor (See page IN–28).**

NG → **Repair or replace harness or connector.**

OK

4	**Check resistance of A/F sensor heater (See page SF–53).**

NG → **Replace A/F sensor.**

OK

5	**Check air induction system (See page SF–1).**

NG → **Repair or replace.**

OK

6	Check fuel pressure (See page SF–5).

NG → Check and repair fuel pump, pressure regulator, fuel pipe line and filter (See page SF–1).

OK

7	Check injector injection (See page SF–20).

NG → Replace injector.

OK

Replace A/F sensor.

8	Perform confirmation driving pattern.

Go

9	Is there DTC P1130 being output again?

YES → Check and replace ECM (See page IN–28).

NO

10	**Did vehicle runs out of fuel in past?**

NO → **Check for intermittent problems (See page DI–182).**

YES

DTC P1130 is caused by running out of fuel.

DTC	P1133	A/F Sensor Circuit Response Malfunction (Bank 1 Sensor 1) (California Spec.)

CIRCUIT DESCRIPTION

Refer to DTC P0125 on page DI–224.

DTC No.	DTC Detecting Condition	Trouble Area
P1133	After engine is warmed up and during vehicle driving at engine speed 1,400 rpm or more and vehicle speed 60 km/h (38 mph) or more, if response characteristics of A/F sensor becomes deteriorated (2 trip detection logic)	• Oper or short in A/F sensor circuit • A/F sensors • Air induction system • Fuel pressure • Injector • ECM

WIRING DIAGRAM

Refer to DTC P0125 on page DI–224.

INSPECTION PROCEDURE

HINT:

Read freeze frame data using the TOYOTA hand–held tester or OBD II scan tool. Because freeze frame records the engine conditions when the malfunction is detected. When troubleshooting, it is useful for determining whether the vehicle was running or stopped, the engine was warmed up or not, the air–fuel ratio was lean or rich, etc. at the time of the malfunction.

1	**Are there any other codes (besides DTC P1133) being output?**

YES → **Go to relevant DTC chart (See page DI–192).**

NO

2	**Connect OBDII scan tool or TOYOTA hand–held tester, and read value for voltage output of A/F sensor.**

PREPARATION:

(a) Connect the OBD II scan tool or TOYOTA hand–held tester to the DLC3.

(b) Warm up the A/F sensor with the engine at speed 2,500 rpm for approx. 90 sec.

CHECK:

Read the voltage of the A/F sensor on the screen of the OBD II scan tool or TOYOTA hand–held tester when you perform all the following conditions.

HINT:

The voltage of the AF1+ terminal of the ECM is fixed at 3.3 V and the voltage of the AF1– terminal is fixed at 3.0 V. Therefore, it is impossible to check the A/F sensor output voltage at the terminals (AF1+/AF1–) of the ECM.

OK:

Condition	A/F Sensor Voltage Value
Engine idling	• Not remains at 3.30 V (0.660 V*) • Not remains at 3.8 V (0.76 V*) or more • Not remains at 2.8 V (0.56 V*) or less *: When you use the OBD II scan tool (excluding TOYOTA hand–held tester)
Engine racing	
Driving at engine speed 1,500 rpm or more and vehicle speed 40 km/h (25 mph) or more, and operate throttle valve open and close.	

HINT:

- During fuel enrichment, there is a case that the output voltage of the A/F sensor is below 2.8 V (0.56 V*), it is normal.
- During fuel cut, there is a case that the output voltage of the A/F sensor is above 3.8 V (0.76 V*), it is normal.
- If the output voltage of the A/F sensor remains at 3.30 V (0.660 V*) even after performing all the above conditions, the A/F sensor circuit may be open.
- If the output voltage of the A/F sensor remains at 3.8 V (0.76 V*) or more, or 2.8 V (0.56 V*) or less even after performing all the above conditions, the A/F sensor circuit may be short.

*: When you use the OBD II scan tool (excluding TOYOTA hand–held tester).

OK → **Go to step 8.**

NG

3	**Check for open and short in harness and connector between ECM and A/F sensor (See page IN–28).**

NG → **Repair or replace harness or connector.**

OK

4	**Check resistance of A/F sensor heater (See page SF–53).**

NG → **Replace A/F sensor.**

OK

5	**Check air induction system (See page SF–1).**

NG → **Repair or replace.**

OK

6	Check fuel pressure (See page SF–5).

NG → Check and repair fuel pump, pressure regulator, fuel pipe line and filter (See page SF–1).

OK

7	Check injector injection (See page SF–20).

NG → Replace injector.

OK

Replace A/F sensor.

8	Perform confirmation driving pattern (See page DI–301).

Go

9	Is there DTC P1133 being output again?

YES → Check and replace ECM (See page IN–28).

NO

10	Did vehicle runs out of fuel in past?

NO → Check for intermittent problems (See page DI–182).

YES

DTC P1133 is caused by running out of fuel.

DI5CC–04

DTC	P1135	A/F Sensor Heater Circuit Malfunction (Bank 1 Sensor 1) (California Spec.)

CIRCUIT DESCRIPTION

Refer to DTC P0125 on page DI–224.

DTC No.	DTC Detecting Condition	Trouble Area
P1135	When heater operates, heater current exceeds 8 A (2 trip detection logic)	• Open or short in heater circuit of A/F sensor • A/F sensor heater • ECM
	Heater current of 0.25 A or less when heater operates (2 trip detection logic)	

WIRING DIAGRAM

Refer to DTC P0125 on page DI–224.

INSPECTION PROCEDURE

HINT:

Read freeze frame data using the TOYOTA hand–held tester or OBD II scan tool. Because freeze frame records the engine conditions when the malfunction is detected. When troubleshooting, it is useful for determining whether the vehicle was running or stopped, the engine was warmed up or not, the air–fuel ratio was lean or rich, etc. at the time of the malfunction.

1	**Check voltage between terminal HTAF1 of ECM connector and body ground.**

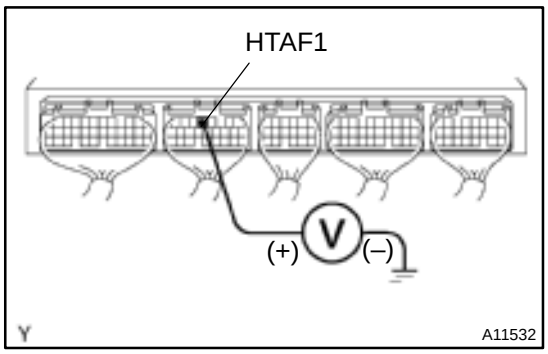

PREPARATION:

(a) Remove the glove compartment (See page SF–56).

(b) Turn the ignition switch ON.

CHECK:

Measure the voltage between terminals HTAF1 of the ECM connector and body ground.

OK:

Voltage: 9 – 14 V

OK	**Check and replace ECM (See page IN–28).**

NG

2	**Check resistance of A/F sensor heater (See page SF–53).**

NG	**Replace A/F sensor.**

OK

Check and repair harness or connector between EFI main relay (Marking: EFI) and A/F sensor, and A/F sensor and ECM (See page IN–28).

DI0SD–09

DTC	P1300	Igniter Circuit Malfunction

CIRCUIT DESCRIPTION

A DIS (Direct Ignition System) has been adopted. The DIS improves the ignition timing accuracy, reduces high–voltage loss, and enhances the overall reliability of the ignition system by eliminating the distributor. The DIS is a 2–cylinder simultaneous ignition system which ignites 2 cylinders simultaneously with 1 ignition coil. In the 2–cylinder simultaneous ignition system, each of the 2 spark plugs is connected to the end of the secondary winding. High voltage generated in the secondary winding is applied directly to the spark plugs. The sparks of the 2 spark plugs pass simultaneously from the center electrode to the ground electrode.
The ECM determines ignition timing end outputs the ignition signals (IGT) for each cylinder. Based on IGT signals, the igniter controls the primary ignition signals (IGC) for all ignition coils. At the same time, the igniter also sends an ignition confirmation signal (IGF) as a fail–safe measure to the ECM.

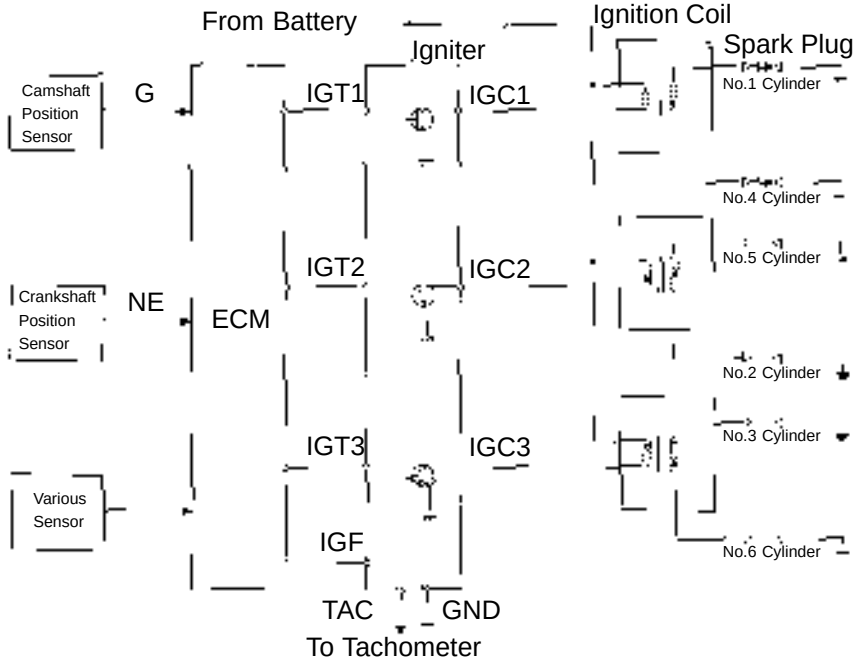

S00251

DTC No.	DTC Detecting Condition	Trouble Area
P1300	Condition (a) is repeated 3 times consecutively during 6 consecutively IGT signals while engine is running: (a) IGF signal is not input to ECM for 2 or more ignitions	• Ignition system • Open or short in IGF or IGT circuit from igniter to ECM • Igniter • Ignition coil • ECM

WIRING DIAGRAM

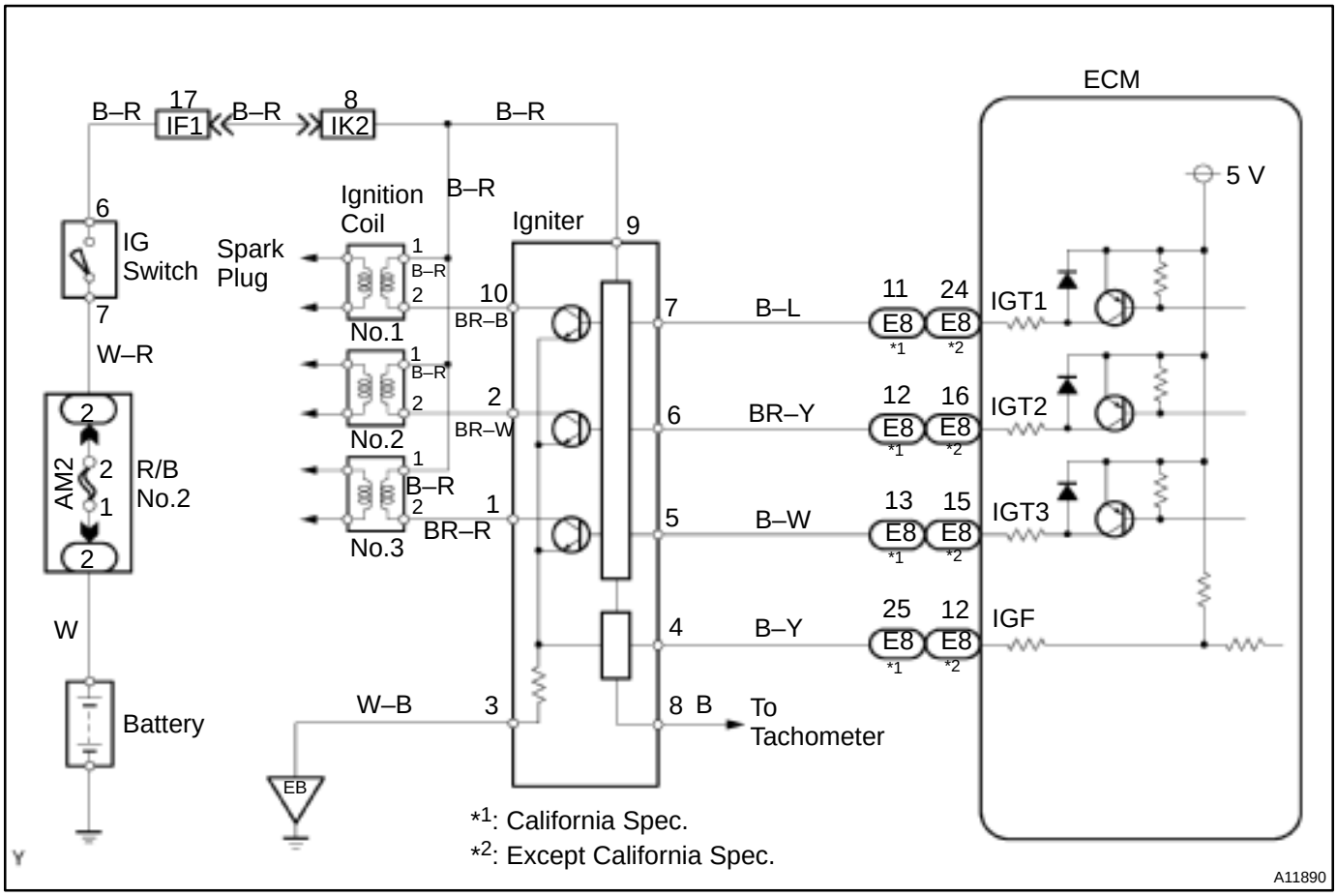

INSPECTION PROCEDURE

HINT:

Read freeze frame data using TOYOTA hand–held tester or OBD II scan tool. Because freeze frame records the engine conditions when the malfunction is detected. When troubleshooting, it is useful for determining whether the vehicle was running or stopped, the engine was warmed up or not, the air–fuel ratio was lean or rich, etc. at the time of the malfunction.

1	**Check spark plug and spark of misfiring cylinder (See page DI–254).**

NG → **Go to step 4.**

OK

2	**Check for open and short in harness and connector in IGF signal circuit between ECM and igniter (See page IN–28).**

NG → **Repair or replace harness or connector.**

OK

3	Disconnect igniter connector, and check voltage between terminal IGF of ECM connector and body ground.

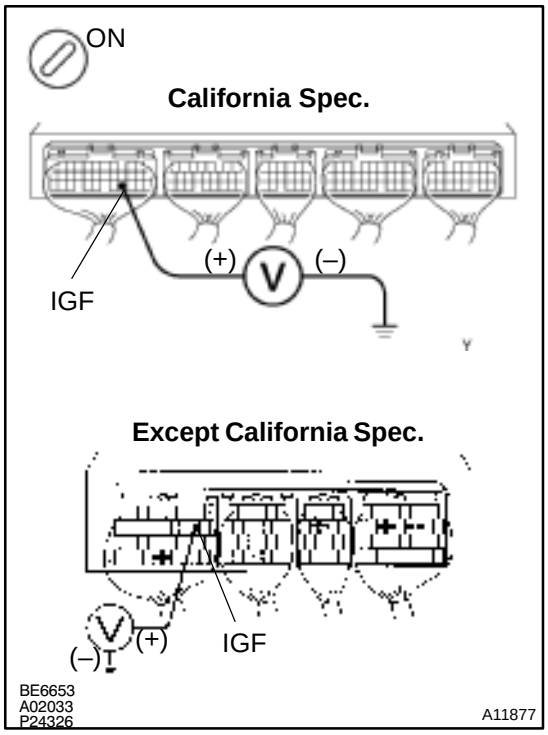

PREPARATION:

(a) Disconnect the igniter connector.
(b) Remove the glove compartment (See page SF–56).
(c) Turn the ignition switch ON.

CHECK:

Measure the voltage between terminal IGF of the ECM connector and body ground.

OK:

Voltage: 4.5 – 5.5 V

OK → **Replace igniter.**

NG

Check and replace ECM (See page IN–28).

4	Check for open and short in harness and connector in IGT signal circuit between ECM and igniter (See page IN–28).

NG → **Repair or replace harness or connector.**

OK

5	**Check voltage between terminals IGT1 – IGT3 of ECM connector and body ground.**

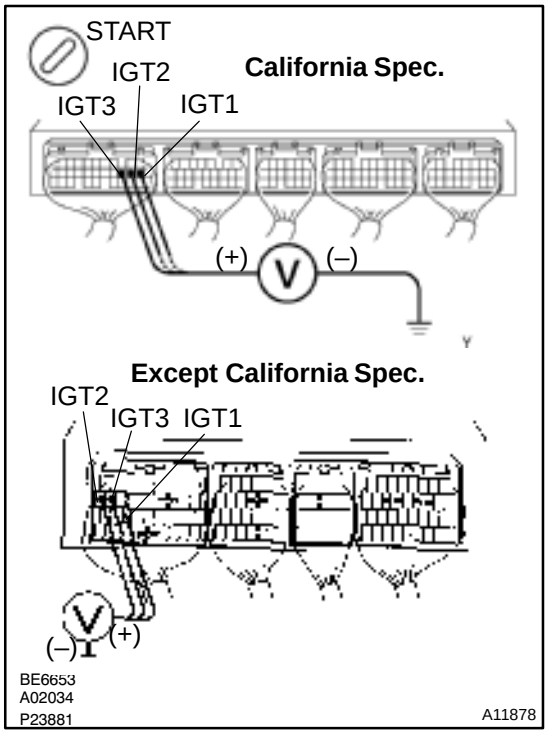

PREPARATION:

Remove the glove compartment (See page SF–56).

CHECK:

Measure the voltage between terminal IGT1 – IGT3 of the ECM connector and body ground when the engine is cranked.

OK:

Voltage: More than 0.1 V and less than 4.5 V

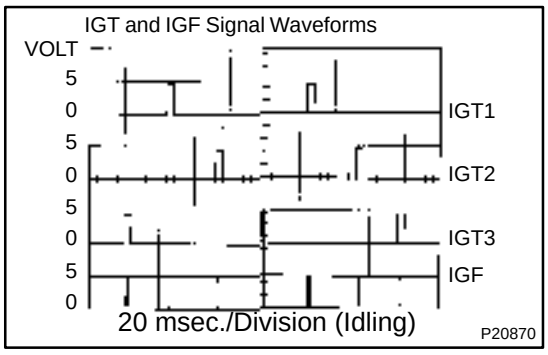

Reference: INSPECTION USING OSCILLOSCOPE

During idling, check the waveforms between terminals IGT1 – IGT3 and E1, and IGF and E1 of the ECM connector.

HINT:

The correct waveforms are as shown.

NG	**Check and replace ECM (See page IN–28).**

OK

6	Disconnect igniter connector, and check voltage between terminals IGT1 – IGT3 of ECM connector and body ground.

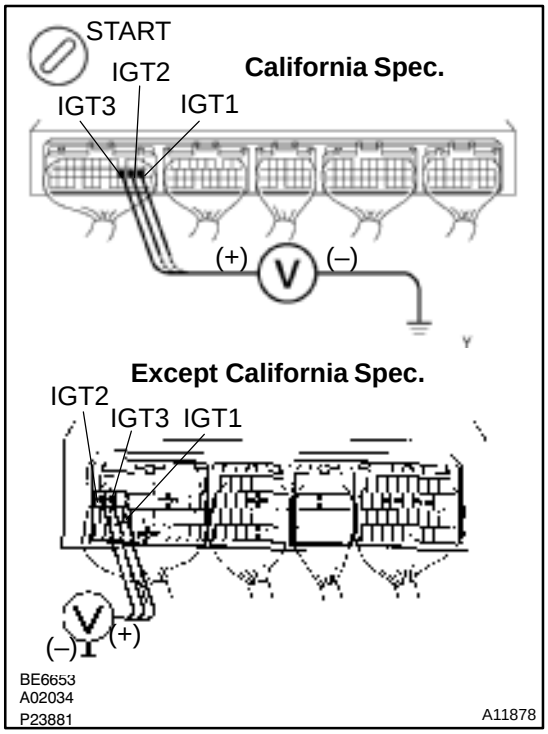

PREPARATION:

(a) Disconnect the igniter connector.

(b) Remove the glove compartment (See page SF–56).

CHECK:

Measure the voltage between terminals IGT1 – IGT3 of the ECM connector and body ground when the engine is cranked.

OK:

Voltage: More than 0.1 V and less than 5.0 V

NG → **Check and replace ECM (See page IN–28).**

OK

7	Check voltage between terminal 9 of igniter connector and body ground.

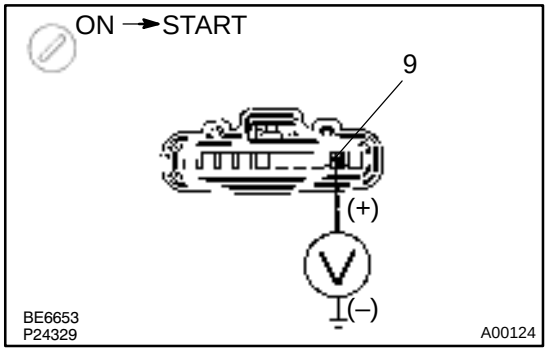

PREPARATION:

Disconnect the igniter connector.

CHECK:

Measure the voltage between terminal 9 of the igniter connector and body ground when the ignition switch is turned to ON and START position.

OK:

Voltage: 9 – 14 V

NG → **Check and repair igniter power source circuit.**

OK

8	**Check for open and short in harness and connector between ignition switch and ignition coil, and ignition coil and igniter (See page IN–28).**

NG → **Repair or replace harness or connector.**

OK

9	**Check ignition coil (See page IG–1).**

NG → **Replace ignition coil.**

OK

Replace igniter.

DI0SE–09

DTC	P1335	Crankshaft Position Sensor Circuit Malfunction (During engine running)

CIRCUIT DESCRIPTION

Refer to DTC P0335 on page DI–263.

DTC No.	DTC Detecting Condition	Trouble Area
P1335	No crankshaft position sensor signal to ECM with engine speed 1,000 rpm or more	• Open or short in crankshaft position sensor circuit • Crankshaft position sensor • Crankshaft timing pulley • ECM

WIRING DIAGRAM

Refer to DTC P0335 on page DI–263.

INSPECTION PROCEDURE

Refer to DTC P0335 on page DI–263.

HINT:

Read freeze frame data using TOYOTA hand–held tester or OBD II scan tool. Because freeze frame records the engine conditions when the malfunction is detected. When troubleshooting, it is useful for determining whether the vehicle was running or stopped, the engine was warmed up or not, the air–fuel ratio was lean or rich, etc. at the time of the malfunction.

DI17G–03

DTC	P1520	Stop Light Switch Signal Malfunction (Only for A/T)

CIRCUIT DESCRIPTION

This signal is used to detect when the brakes have been applied. The STP (BK) signal voltage is the same as the voltage supplied to the stop lights. The STP (BK) signal is used mainly to control the fuel cut–off engine speed. (The fuel cut–off engine speed is reduced slightly when the vehicle is braking.)

DTC No.	DTC Detecting Condition	Trouble Area
P1520	Stop light switch does not turn off even once vehicle is driven (2 trip detection logic)	• Short in stop light switch signal circuit • Stop light switch • ECM

HINT:
In this circuit, diagnosis can only be made in the check mode.

WIRING DIAGRAM

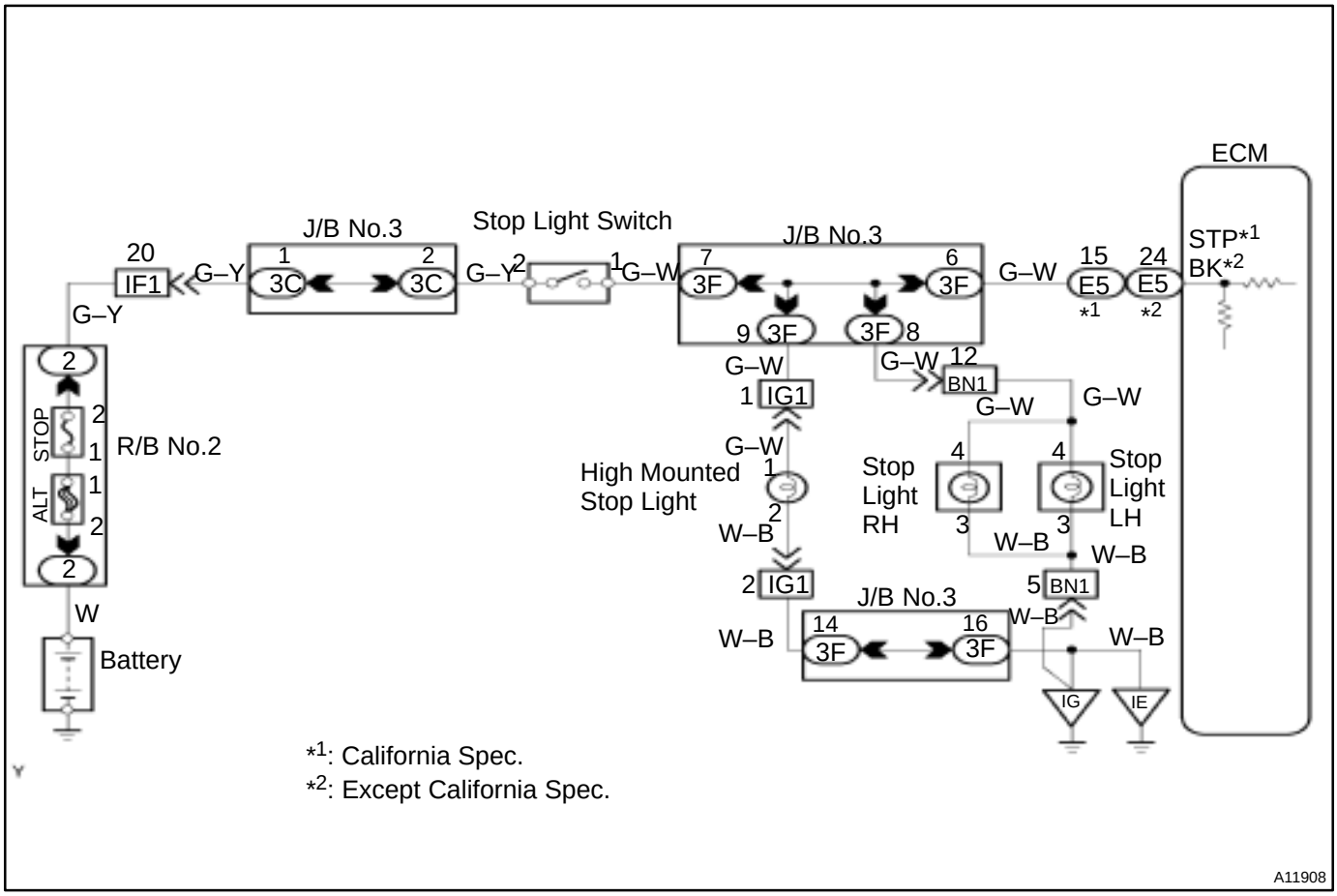

INSPECTION PROCEDURE

HINT:
Read freeze frame data using TOYOTA hand–held tester or OBD II scan tool. Because freeze frame records the engine conditions when the malfunction is detected When troubleshooting, it is useful for determining whether the vehicle was running or stopped, the engine was warmed up or not, the air–fuel ratio was lean or rich, etc. at the time of the malfunction.

1	Check operation of stop light.

CHECK:

Check if stop lights go on and off normally when the brake pedal is operated and released.

NG → **Check and repair the stop light circuit (See page BE–29).**

OK

2	Check STP (BK).

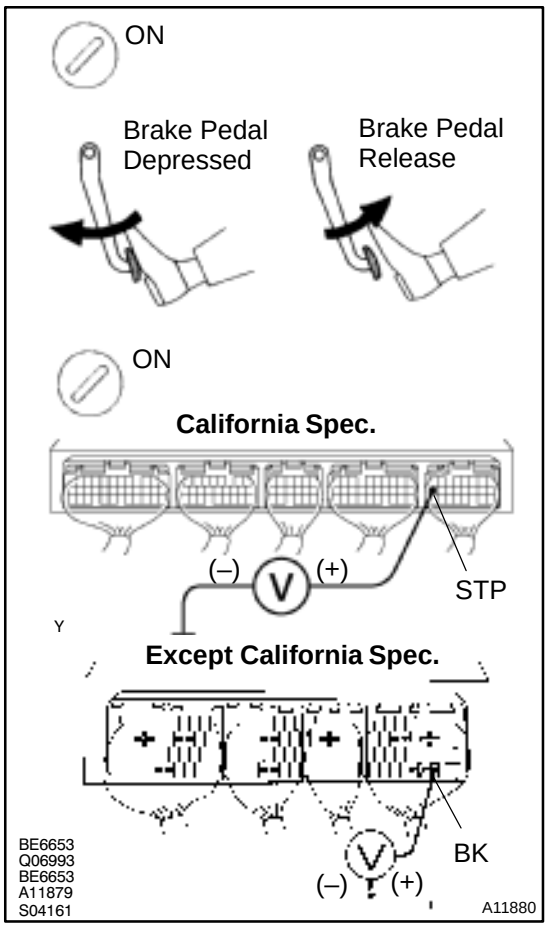

When using TOYOTA hand–held tester:

PREPARATION:

(a) Connect the TOYOTA hand–held tester to the DLC3.

(b) Turn the ignition switch ON and push the TOYOTA hand–held tester main switch ON.

CHECK:

Read the BK signal on the TOYOTA hand–held tester.

OK:

Brake Pedal	STP Signal
Depressed	ON
Release	OFF

When not using TOYOTA hand–held tester:

PREPARATION:

(a) Remove the glove compartment (See page SF–56).

(b) Turn the ignition switch ON.

CHECK:

Check the voltage between terminal STP (California Spec.), BK (Except California Spec.) of the ECM connector and body ground.

OK:

Brake pedal	Voltage
Depressed	7.5 – 14 V
Release	Below 1.5 V

OK → **Check for intermittent problems (See page DI–182).**

NG

3	**Check harness and connector between stop light switch and ECM (See page IN–28).**

NG → **Repair or replace harness or connector.**

OK

Check and replace ECM (See page SF–56).

DI0SG–09

DTC	P1600	ECM BATT Malfunction

CIRCUIT DESCRIPTION

Battery positive voltage is supplied to terminal BATT of the ECM even when the ignition switch is OFF for use by the DTC memory and air–fuel ratio adaptive control value memory, etc.

DTC No.	DTC Detecting Condition	Trouble Area
P1600	Open in back up power source circuit	• Open in back up power source circuit • ECM

HINT:

If DTC P1600 appear, the ECM does not store another DTC.

WIRING DIAGRAM

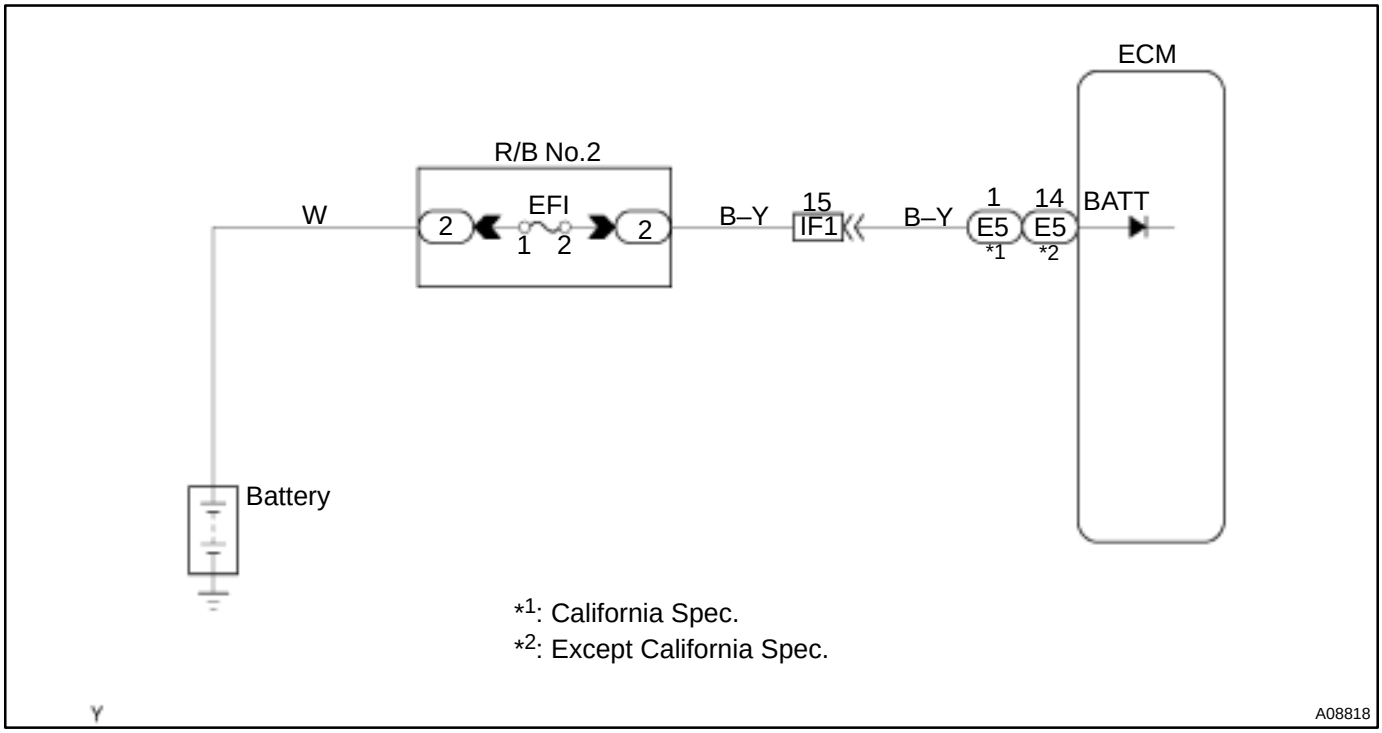

INSPECTION PROCEDURE

HINT:

Read freeze frame data using TOYOTA hand–held tester or OBD II scan tool. Because freeze frame records the engine conditions when the malfunction is detected. When troubleshooting, it is useful for determining whether the vehicle was running or stopped, the engine was warmed up or not, the air–fuel ratio was lean or rich, etc. at the time of the malfunction.

1	Check voltage between terminal BATT of ECM connector and body ground.

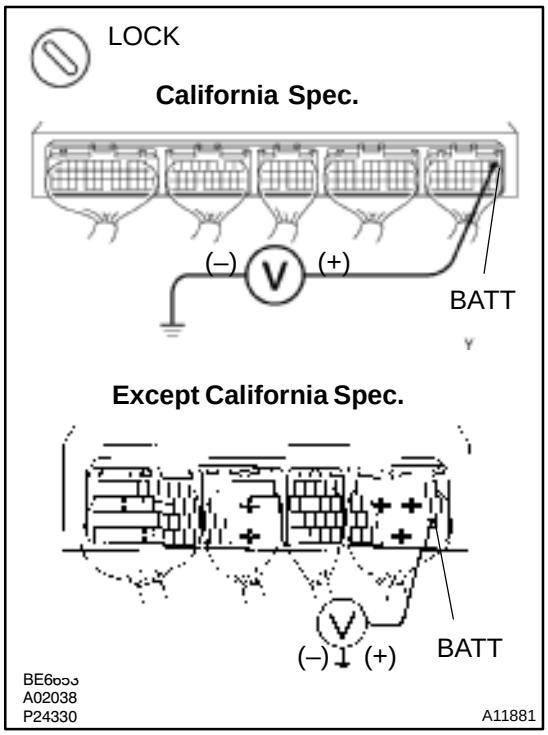

PREPARATION:
Remove the glove compartment (See page SF–56).
CHECK:
Measure the voltage between terminal BATT of the ECM connector and body ground.
OK:
Voltage: 9 – 14 V

OK	Check and replace ECM (See page IN–28).

NG

2	Check EFI fuse.

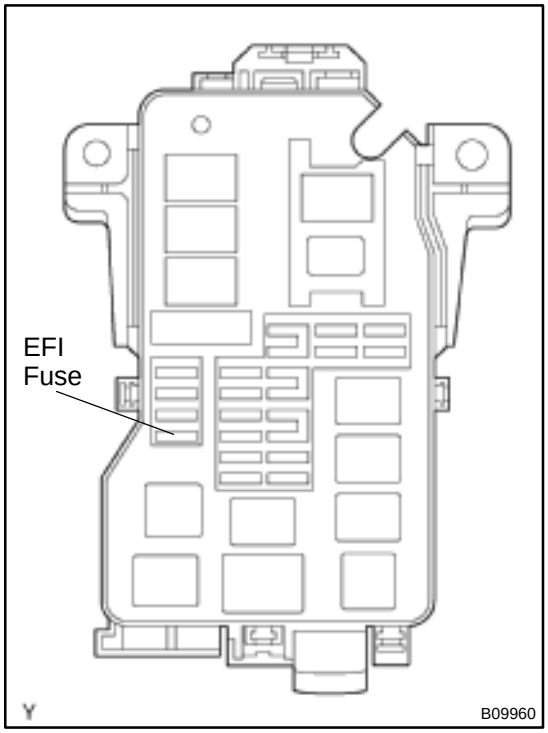

PREPARATION:
Remove the EFI fuse from the R/B No.2.
CHECK:
Check the continuity of the EFI fuse.
OK:
Continuity

NG → **Check for short in all harness and components connected to EFI fuse.**

OK

Check and repair harness or connector between battery and EFI fuse, and EFI fuse and ECM.

DTC	P1780	Park/Neutral Position Switch Malfunction (Only for A/T)

CIRCUIT DESCRIPTION

The park/neutral position switch go on when the shift lever is in the N or P shift position. When it goes on, terminal NSW of the ECM is grounded to body ground via the starter relay, thus the terminal NSW voltage becomes 0 V. When the shift lever is in the D, 2, L or R position, the park/neutral position switch goes off, so the voltage of ECM. Terminal NSW becomes battery voltage, the voltage of the ECM internal power source. If the shift lever is moved from the N position to the D position, this signal is used for air–fuel ratio correction and for idle speed control (estimated control), etc.

DTC No.	DTC Detecting Condition	Trouble Area
P1780	2 or more switches are ON simultaneously for N, 2, L and R position (2 trip detection logic)	• Short in park/neutral position switch circuit • Park/neutral position switch • ECM
	When driving under conditions (a) and (b) for 30 sec. or more the park/neutral position switch is ON (N position): (2 trip detection logic) (a) Vehicle speed: 70 km/h (44 mph) or more (b) Engine speed: 1,500 – 2,500 rpm	

HINT:
After confirming DTC P1780, use the TOYOTA hand–held tester to confirm the PNP switch signal from the CURRENT DATA.

WIRING DIAGRAM

Refer to DTC P1780 on page DI–389.

INSPECTION PROCEDURE

HINT:
Read freeze frame data using TOYOTA hand–held tester or OBD II scan tool. Because freeze frame records the engine conditions when the malfunction is detected. When troubleshooting, it is useful for determining whether the vehicle was running or stopped, the engine was warmed up or not, the air–fuel ratio was lean or rich, etc. at the time of the malfunction.
Refer to DTC P1780 on page DI–389.

DI6WJ–01

DTC	P0171	System too Lean (Except California Spec.)

DTC	P0172	System too Rich (Except California Spec.)

CIRCUIT DESCRIPTION

Fuel trim refers to the feedback compensation value compared to the basic injection time. Fuel trim includes short–term fuel trim and long–term fuel trim.

Short–term fuel trim is the short–term fuel compensation used to maintain the air–fuel ratio at its ideal theoretical value. The signal from the heated oxygen sensor indicates whether the air–fuel ratio is RICH or LEAN compared to the ideal theoretical value, triggering a reduction in fuel volume if the air–fuel ratio is rich, and an increase in fuel volume if it is lean.

Long–term fuel trim is the overall fuel compensation carried out over the long–term to compensate for continual deviation of the short–term fuel trim from the central value due to individual engine differences, wear overtime and changes in the usage environment.

If both the short–term fuel trim and long–term fuel trim are LEAN or RICH beyond a certain value, it is detected as a malfunction and the MIL lights up.

DTC No.	DTC Detecting Condition	Trouble Area
P0171	When air fuel ratio feedback is stable after warming up engine, fuel trim is considerably in error on RICH side (2 trip detection logic)	• Air induction system • Injector blockage • Mass air flow meter • Engine coolant temp. sensor • Fuel pressure • Gas leakage on exhaust system • Open or short in heated oxygen sensor (bank 1 sensor 1) circuit • Heated oxygen sensor (bank 1 sensor 1) • ECM
P0172	When air fuel ratio feedback is stable after warming up engine, fuel trim is considerably in error on LEAN side (2 trip detection logic)	• Injector leak, blockage • Mass air flow meter • Engine coolant temp. sensor • Ignition system • Fuel pressure • Gas leakage on exhaust system • Open or short in heated oxygen sensor (bank 1 sensor 1) circuit • Heated oxygen sensor (bank 1 sensor 1) • ECM

HINT:

- When DTC P0171 is recorded, the actual air–fuel ratio is on the LEAN side. When DTC P0172 is recorded, the actual air–fuel ratio is on the RICH side.
- If the vehicle runs out of fuel, the air–fuel ratio is LEAN and DTC P0171 is recorded. The MIL then comes on.
- If the total of the short–term fuel trim value and long–term fuel trim value is within ±25 %, the system is functioning normally.

INSPECTION PROCEDURE

HINT:

Read freeze frame data using TOYOTA hand–held tester or OBD II scan tool. Because freeze frame records the engine conditions when the malfunction is detected. When troubleshooting, it is useful for determining whether the vehicle was running or stopped, the engine was warmed up or not, the air–fuel ratio was lean or rich, etc. at the time of the malfunction.

1	**Check air induction system (See page SF–1).**

NG → **Repair or replace.**

OK

2	**Check injector injection (See page SF–20).**

NG → **Replace injector.**

OK

3	**Check mass air flow meter (See page SF–27) and engine coolant temperature sensor (See page SF–47).**

NG → **Repair or replace.**

OK

4	**Check for spark and ignition (See page IG–1).**

NG → **Repair or replace.**

OK

5	**Check fuel pressure (See page SF–5).**

NG → **Check and repair fuel pump, pressure regulator, fuel pipe line and filter (See page SF–1).**

OK

6	**Check gas leakage on exhaust system.**

NG → **Repair or replace.**

OK

7	**Check output voltage of heated oxygen sensor (bank 1 sensor 1) during idling.**

PREPARATION:

Warm up the heated oxygen sensor with the engine speed at 2,500 rpm for approx. 90 sec.

CHECK:

Use the OBD II scan tool or TOYOTA hand–held tester to read the output voltage of the heated oxygen sensor during idling.

OK:

Heated oxygen sensor output voltage:

Alternates repeatedly between less than 0.35 V and more than 0.55 V (See the following table).

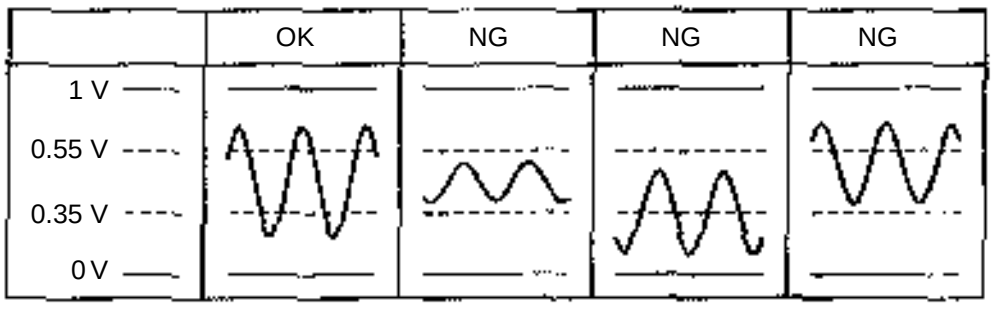

OK → **Go to step 9.**

NG

8	**Check for open and short in harness and connector between ECM and heated oxygen sensor (bank 1 sensor 1) (See page IN–28).**

NG → Repair or replace harness or connector.

OK

Replace heated oxygen sensor.

9	Perform confirmation driving pattern (See page DI–234).

Go

10	Is there DTC P0171 or P0172 being output again?

YES → Check and replace ECM (See page IN–28).

NO

11	Did vehicle runs out of fuel in past?

NO → Check for intermittent problems (See page DI–182).

YES

DTC P0171 or P0172 is caused by running out of fuel.

DI0RQ–10

CIRCUIT INSPECTION

DTC	P0100	Mass Air Flow Circuit Malfunction

CIRCUIT DESCRIPTION

The mass air flow meter uses a platinum hot wire. The hot wire air flow meter consists of a platinum hot wire, thermistor and a control circuit installed in a plastic housing. The hot wire air flow meter works on the principle that the hot wire and thermistor located in the intake air bypass of the housing detect any changes in the intake air temperature.

The hot wire is maintained at the set temperature by controlling the current flow through the hot wire. This current flow is ten measured as the output voltage of the mass air flow meter.

The circuit is constructed so that the platinum hot wire and thermistor provide a bridge circuit with the power transistor controlled so that the potential of A and B remains equal to maintain the set temperature.

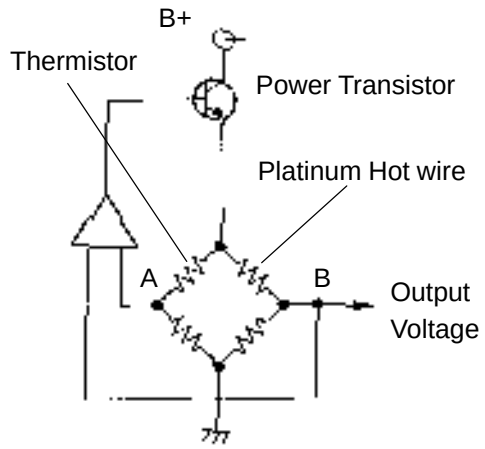

FI6929
S05741

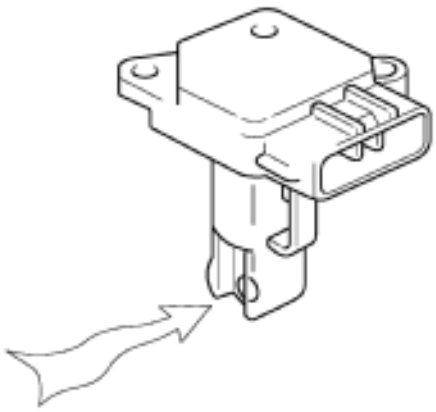

A06106

DTC No.	DTC Detecting Condition	Trouble Area
P0100	Open or short in mass air flow meter circuit with engine speed 4,000 rpm or less	• Open or short in mass air flow meter circuit • Mass air flow meter • ECM
	Open or short in mass air flow meter circuit with engine speed 4,000 rpm or more (2 trip detection logic)	

HINT:

After confirming DTC P0100, use the OBD II scan tool or TOYOTA hand–held tester to confirm the mass air flow ratio from the CURRENT DATA.

Mass Air Flow Value (gm/sec.)	Malfunction
Approx. 0	• Mass air flow meter power source circuit open • VG circuit open or short
11.0 – 25.1 (Idling after warmed up)	• E2G (California Spec.), E3 (Except California Spec.) circuit open

WIRING DIAGRAM

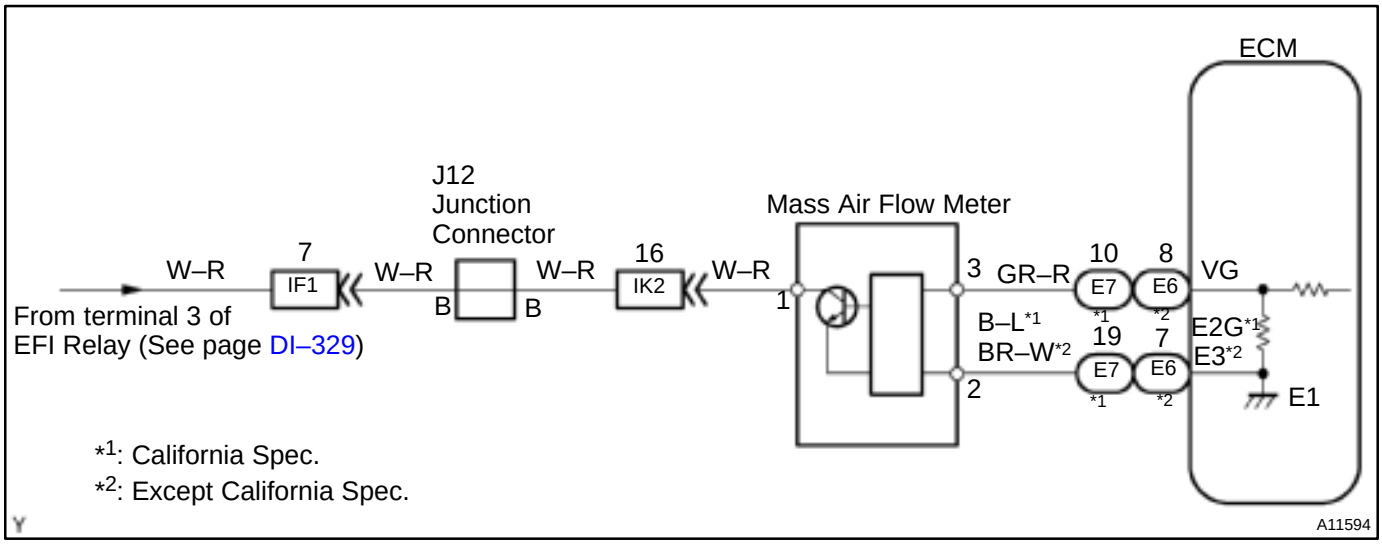

INSPECTION PROCEDURE

HINT:

Read freeze frame data using TOYOTA hand–held tester or OBD II scan tool. Because freeze frame records the engine conditions when the malfunction is detected. When troubleshooting, it is useful for determining whether the vehicle was running or stopped, the engine was warmed up or not, the air–fuel ratio was lean or rich, etc. at the time of the malfunction.

1	**Connect OBD II scan tool or TOYOTA hand–held tester, and read value of mass air flow rate.**

PREPARATION:

(a) Connect the OBD II scan tool or TOYOTA hand–held tester to the DLC3.
(b) Turn the ignition switch ON and push the OBD II scan tool or TOYOTA hand–held tester main switch ON.
(c) Start the engine.

CHECK:

Read the mass air flow rate on the OBD II scan tool or TOYOTA hand–held tester.

RESULT:

	Type I	Type II
Mass air flow rata (gm/sec.)	Approx. 0	11.0 – 25.1 (Idling after warmed up)

Type I	**Go to step 2.**
Type II	**Go to step 5.**

2	Check voltage of mass air flow meter power source.

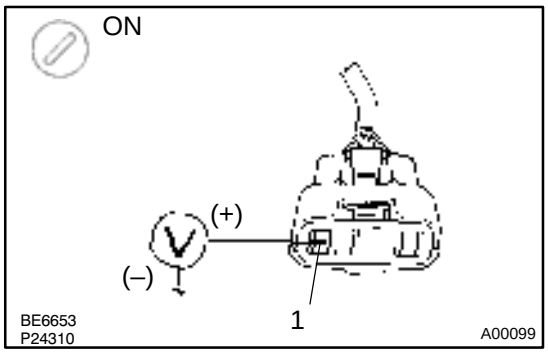

PREPARATION:

(a) Disconnect the mass air flow meter connector.

(b) Turn the ignition switch ON.

CHECK:

Measure the voltage between terminal 1 of the mass air flow meter connector and body ground.

OK:

Voltage: 9 – 14 V

NG → **Check for open in harness and connector between EFI main relay (Marking: EFI) and mass air flow meter (See page IN–28).**

OK

3	Check voltage between terminal VG of ECM connector and body ground.

California Spec.

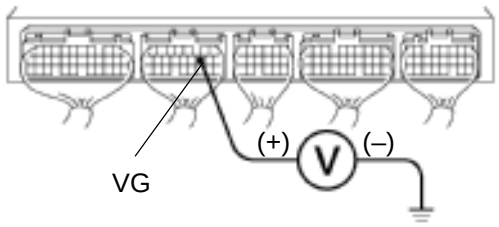

Except California Sprc.

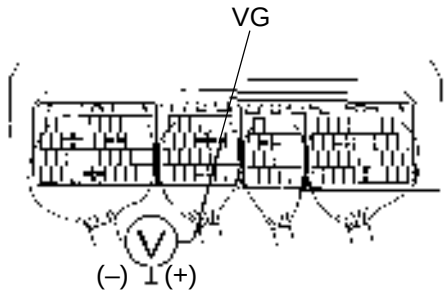

PREPARATION:

(a) Remove the glove compartment (See page SF–56).

(b) Start the engine.

CHECK:

Measure the voltage between terminal VG of the ECM connector and body ground while the engine is idling.

OK:

Voltage:
1.1 – 1.5 V (P or N position and A/C switch OFF)

OK → **Check and replace ECM (See page IN–28).**

NG

4	**Check for open and short in harness and connector between mass air flow meter and ECM (See page IN–28).**

NG → **Repair or replace harness or connector.**

OK

Replace mass air flow meter.

5	**Check continuity between terminal E2G (California Spec.), E3 (Except California Spec.) of ECM connector and body ground.**

California Spec.

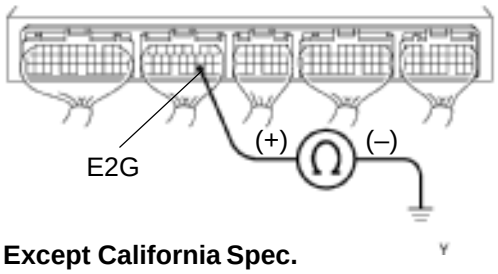

Except California Spec.

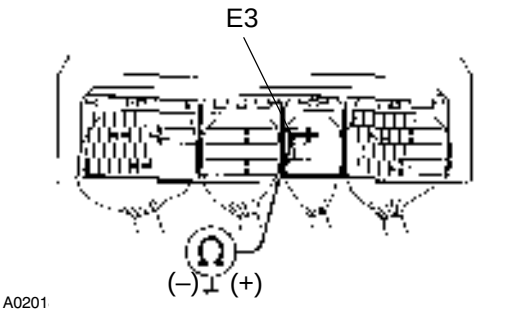

A0201
P23859

A11612

PREPARATION:

Remove the glove compartment (See page SF–56).

CHECK:

Check the continuity between terminal E2G and E3 of the ECM connector and body ground.

OK:

Continuity (1 Ω or less)

NG → **Check and replace ECM (See page IN–28).**

OK

6	**Check for open in harness and connector between mass air flow meter and ECM (See page IN–28).**

NG → **Repair or replace harness or connector.**

OK

Replace mass air flow meter.

DTC	P0101	Mass Air Flow Circuit Range/Performance Problem

CIRCUIT DESCRIPTION

Refer to DTC P0100 on page DI–203.

DTC No.	DTC Detecting Condition	Trouble Area
P0101	After engine is warmed up, conditions (a) and (b) continue with engine speed 900 rpm or less: (2 trip detection logic) (c) Throttle valve fully closed (d) Mass air flow meter output > 2.2 V	• Mass air flow meter
	Conditions (a) and (b) continue with engine speed 1,500 rpm or more: (2 trip detection logic) (a) VTA ≧ 0.63 V (b) Mass air flow meter output < 1.06 V	

INSPECTION PROCEDURE

HINT:

Read freeze frame data using TOYOTA hand–held tester or OBD II scan tool. Because freeze frame records the engine conditions when the malfunction is detected. When troubleshooting, it is useful for determining whether the vehicle was running or stopped, the engine was warmed up or not, the air–fuel ratio was lean or rich, etc. at the time of the malfunction.

1	Are there any other codes (besides DTC P0101) being output?

NO → Replace mass air flow meter.

YES

Go to relevant DTC chart (See page DI–192).

DI0RS–10

DTC	P0110	Intake Air Temp. Circuit Malfunction

CIRCUIT DESCRIPTION

Fig. 1

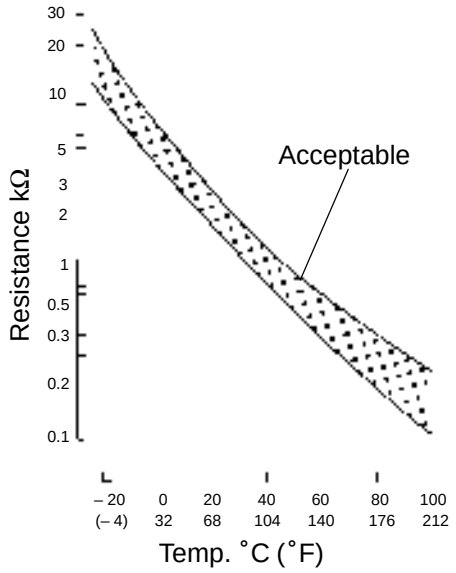

The intake air temperature sensor is built into the mass air flow meter and senses the intake air temperature.
A thermistor built in the sensor changes the resistance value according to the intake air temperature.
The lower the intake air temperature, the greater the thermistor resistance value, and the higher the intake air temperature, the lower the thermistor resistance value (See Fig. 1).
The intake air temperature sensor is connected to the ECM (See below). The 5 V power source voltage in the ECM is applied to the intake air temperature sensor from terminal THA via resistor R.
That is, resistor R and the intake air temperature sensor are connected in series. When the resistance value of the intake air temperature sensor changes in accordance with changes in the intake air temperature, the potential at terminal THA also changes. Based on this signal, the ECM increases the fuel injection volume to improve driveability during cold engine operation.

DTC No.	DTC Detecting Condition	Trouble Area
P0110	Open or short in intake air temp. sensor circuit	• Open or short in intake air temperature sensor circuit • Intake air temp. sensor (built into mass air flow meter) • ECM

HINT:
After confirming DTC P0110, use the OBD II scan tool or TOYOTA hand–held tester to confirm the intake air temperature from the CURRENT DATA.

Temperature Displayed	Malfunction
–40˚C (–40˚F)	Open circuit
140˚C (284˚F) or more	Short circuit

WIRING DIAGRAM

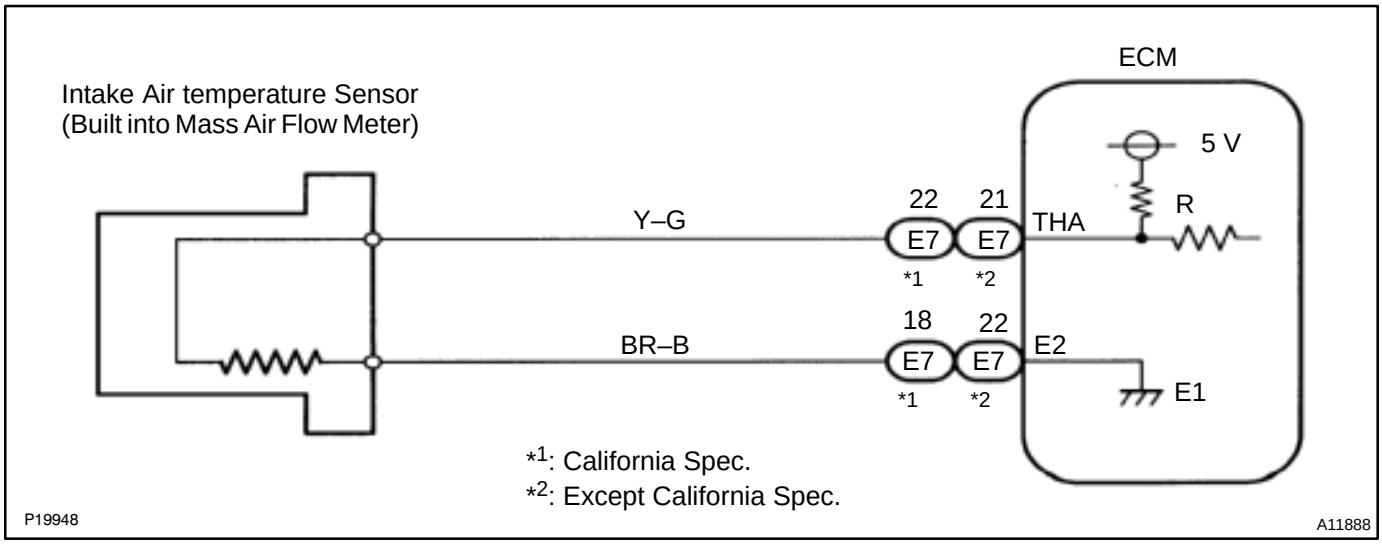

INSPECTION PROCEDURE

HINT:

- If DTCs P0110, P0115 and P0120 are output simultaneously, E2 (sensor ground) may be open.
- Read freeze frame data using TOYOTA hand–held tester or OBD II scan tool. Because freeze frame records the engine conditions when the malfunction is detected. When troubleshooting, it is useful for determining whether the vehicle was running or stopped, the engine was warmed up or not, the air–fuel ratio was lean or rich, etc. at the time of the malfunction.

1	**Connect OBD II scan tool or TOYOTA hand–held tester, and read value of intake air temperature.**

PREPARATION:

(a) Connector the OBD II scan tool or TOYOTA hand–held tester to the DLC3.

(b) Turn the ignition switch ON and push the OBD II scan tool or TOYOTA hand–held tester main switch ON.

CHECK:

Read the temperature value on the OBD II scan tool or TOYOTA hand–held tester.

OK:

Same as actual intake air temperature.

HINT:

- If there is open circuit, OBD II scan tool or TOYOTA hand–held tester indicates –40˚C (–40˚F).
- If there is short circuit, OBD II scan tool or TOYOTA hand–held tester indicates 140˚C (284˚F) or more.

NG → **–40˚C (–40˚F) ... Go to step 2.**
140˚C (284˚F) or more ... Go to step 4.

OK

Check for intermittent problems (See page DI–182).

2	Check for open in harness or ECM.

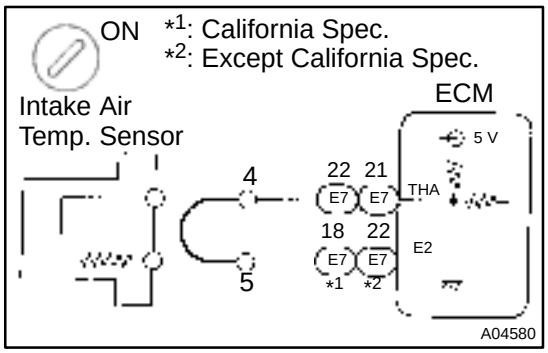

PREPARATION:

(a) Disconnect the mass air flow meter connector.
(b) Connect the sensor wire harness terminals together.
(c) Turn the ignition switch ON.

CHECK:

Read the temperature value on the OBD II scan tool or TOYOTA hand–held tester.

OK:

Temperature value: 140°C (284°F) or more

OK	Confirm good connection at sensor. If OK, replace mass air flow meter.

NG

3	Check for open in harness or ECM.

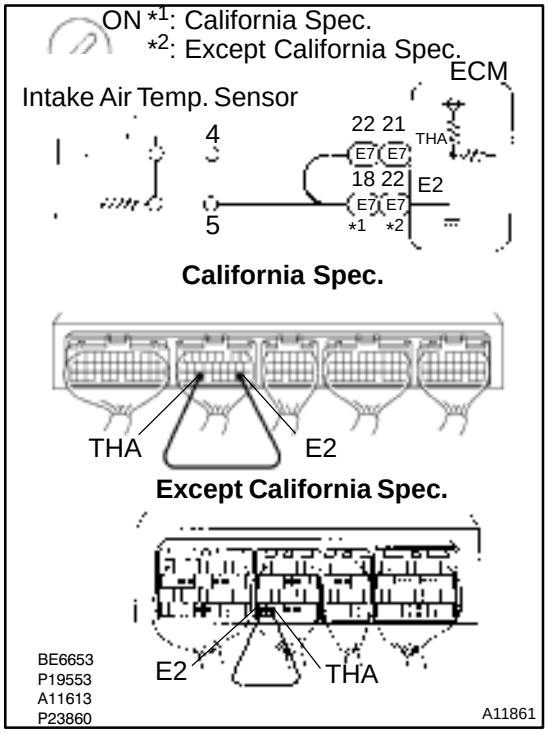

PREPARATION:

(a) Remove the glove compartment (See page SF–56).
(b) Connect between terminals THA and E2 of the ECM connector.

HINT:

The mass air flow meter connector is disconnected. Before checking, do a visual and contact pressure check for the ECM connector (See page IN–28).

CHECK:

Read the temperature value on the OBD II scan tool or TOYOTA hand–held tester.

OK:

Temperature value: 140°C (284°F) or more

OK	Open in harness between terminals E2 or THA, repair or replace harness.

NG

Confirm good connection at ECM. If OK, check and replace ECM (See page IN–28).

4	Check for short in harness and ECM.

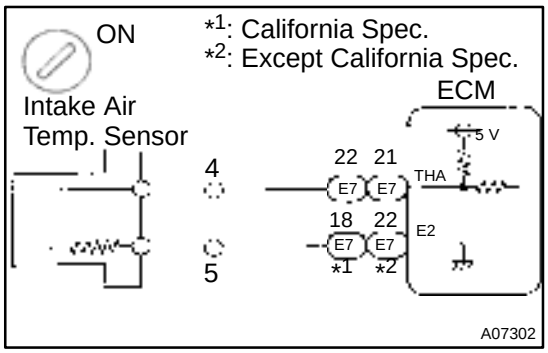

PREPARATION:

(a) Disconnect the mass air flow meter connector.

(b) Turn the ignition switch ON.

CHECK:

Read the temperature value on the OBD II scan tool or TOYOTA hand–held tester.

OK:

Temperature value: –40°C (–40°F)

OK	Replace mass air flow meter.

NG

5	Check for short in harness or ECM.

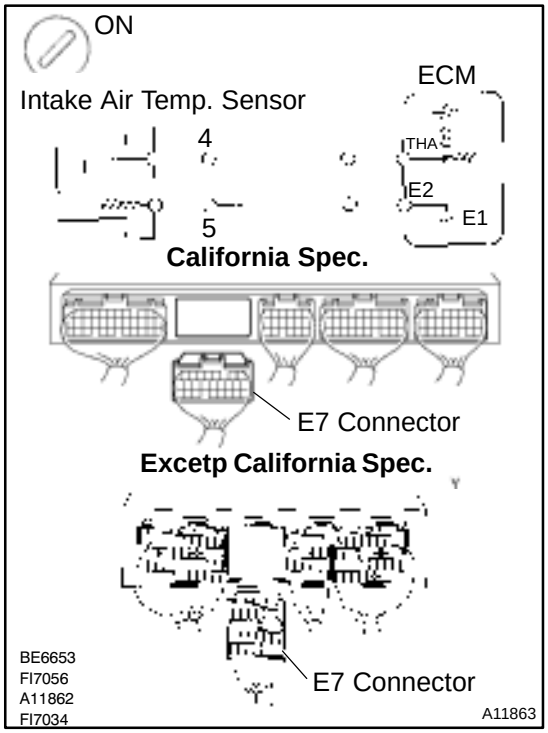

PREPARATION:

(a) Remove the glove compartment (See page SF–56).

(b) Disconnect the E7 connector from the ECM.

HINT:

The mass air flow meter connector is disconnected.

(c) Turn the ignition switch ON.

CHECK:

Read the temperature value on the OBD II scan tool or TOYOTA hand–held tester.

OK:

Temperature value: –40°C (–40°F)

OK	Repair or replace harness or connector.

NG

Check and replace ECM (See page IN–28).

DI0RT–09

DTC	P0115	Engine Coolant Temp. Circuit Malfunction

CIRCUIT DESCRIPTION

A thermistor built into the engine coolant temperature sensor changes the resistance value according to the engine coolant temperature.

The structure of the sensor and connection to the ECM is the same as in the DTC P0110 shown on page DI–209.

DTC No.	DTC Detecting Condition	Trouble Area
P0115	Open or short in engine coolant temp. sensor circuit	• Open or short in engine coolant temp. sensor circuit • Engine coolant temp. sensor • ECM

HINT:

After confirming DTC P0115, use the OBD II scan tool or TOYOTA hand–held tester to confirm the engine coolant temperature from the CURRENT DATA.

Temperature Displayed	Malfunction
–40°C (–40°F)	Open circuit
140C° (284°F) or more	Short circuit

WIRING DIAGRAM

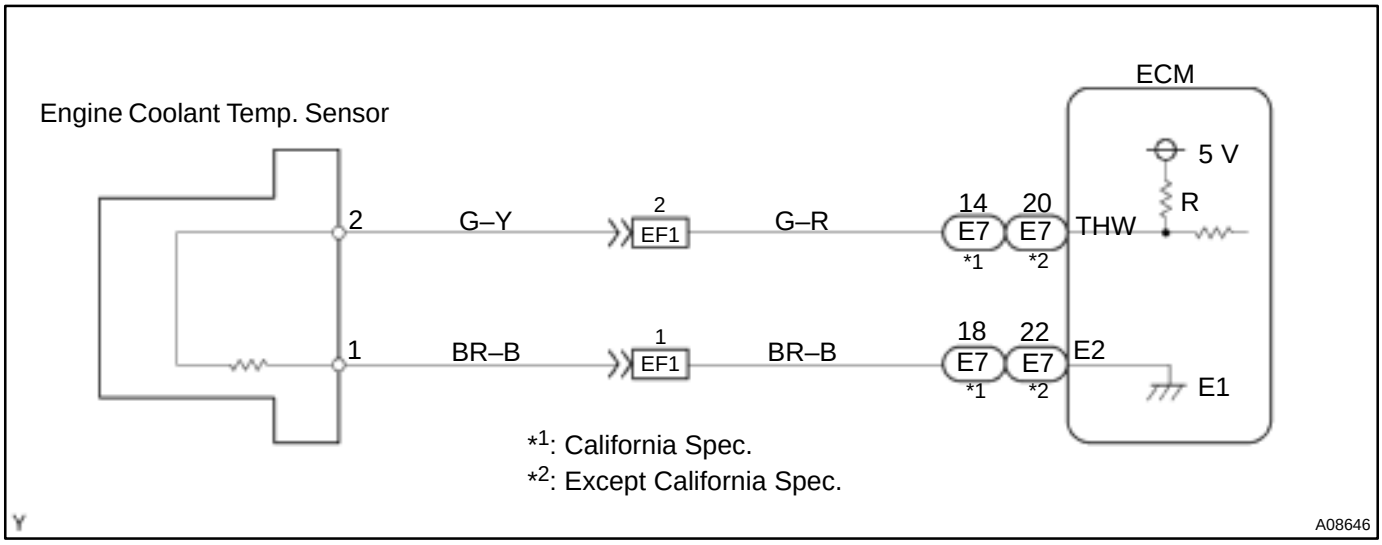

INSPECTION PROCEDURE

HINT:

- If DTCs P0110 , P0115 and P0120 are output simultaneously, E2 (sensor ground) may be open.
- Read freeze frame data using TOYOTA hand–held tester or OBD II scan tool. Because freeze frame records the engine conditions when the malfunction is detected. When troubleshooting, it is useful for determining whether the vehicle was running or stopped, the engine was warmed up or not, the air–fuel ratio was lean or rich, etc. at the time of the malfunction.

1	**Connect OBD II scan tool or TOYOTA hand–held tester, and read value of engine coolant temperature.**

PREPARATION:

(a) Connect the OBD II scan tool or TOYOTA hand–held tester to the DLC3.

(b) Turn the ignition switch ON and push the OBD II scan tool or TOYOTA hand–held tester main switch ON.

CHECK:

Read the temperature value on the OBD II scan tool or TOYOTA hand–held tester.

OK:

Same as actual engine coolant temperature.

HINT:

- If there is open circuit, OBD II scan tool or TOYOTA hand–held tester indicates –40˚C (–40˚F).
- If there is open circuit, OBD II scan tool or TOYOTA hand–held tester indicates 140˚C (284˚F) or more.

NG → **–40˚C (–40˚F) ... Go to step 2.**
140˚C (284˚F) or more ... Go to step 4.

OK

Check for intermittent problems (See page DI–182).

2	**Check for open in harness or ECM.**

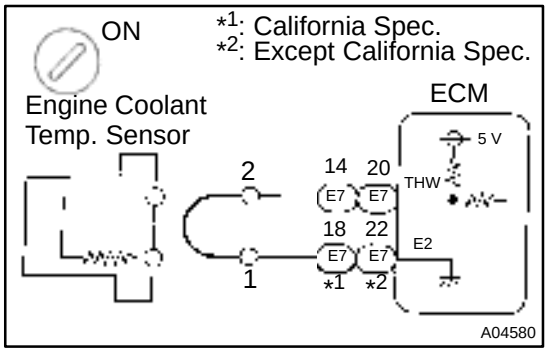

PREPARATION:

(a) Disconnect the engine coolant temperature sensor connector.

(b) Connect the sensor wire harness terminals together.

(c) Turn ignition switch ON.

CHECK:

Read the temperature value on the OBD II scan tool or TOYOTA hand–held tester.

OK:

Temperature value: 140°C (284°F) or more

OK → **Confirm good connection at sensor. If OK, replace engine coolant temperature sensor.**

NG

3	Check for open in harness or ECM.

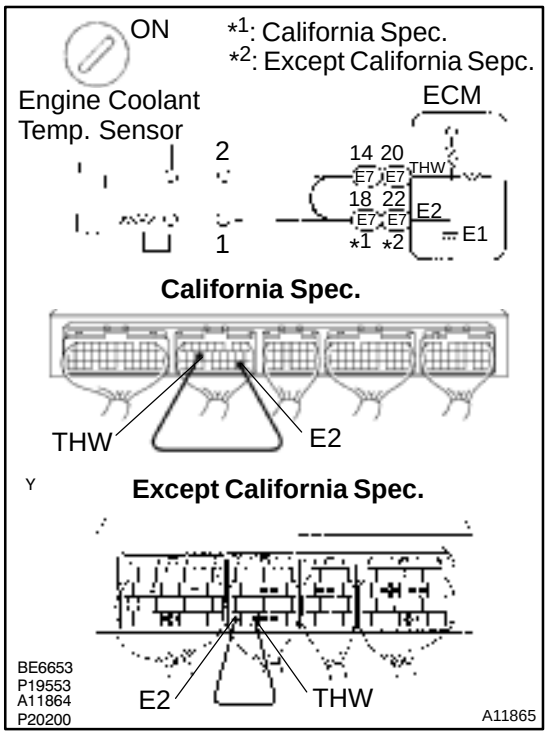

PREPARATION:

(a) Remove the glove compartment (See page SF–56).

(b) Connect between terminals THW and E2 of the ECM connector.

HINT:

The engine coolant temperature sensor connector is disconnected. Before checking, do a visual and contact pressure check for the ECM connector (See page IN–28).

(c) Turn the ignition switch ON.

CHECK:

Read the temperature value on the OBD II scan tool or TOYOTA hand–held tester.

OK:

Temperature value: 140°C (284°F) or more

OK	Open in harness between terminals E2 or THW, repair or replace harness.

NG

Confirm good connection at ECM. If OK, check and replace ECM (See page IN–28).

4	Check for short in harness and ECM.

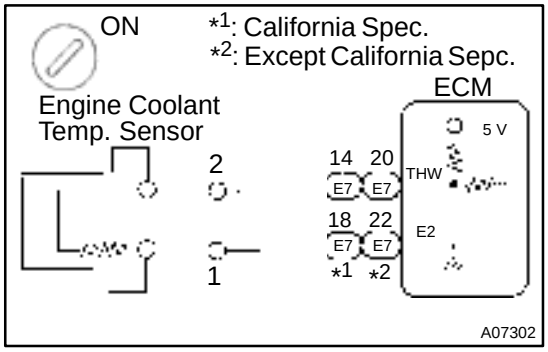

PREPARATION:

(a) Disconnect the engine coolant temperature sensor connector.

(b) Turn the ignition switch ON.

CHECK:

Read the temperature value on the OBD II scan tool or TOYOTA hand–held tester.

OK:

Temperature value: –40°C (–40°F)

OK	Replace engine coolant temperature sensor.

NG

5	Check for short in harness or ECM.

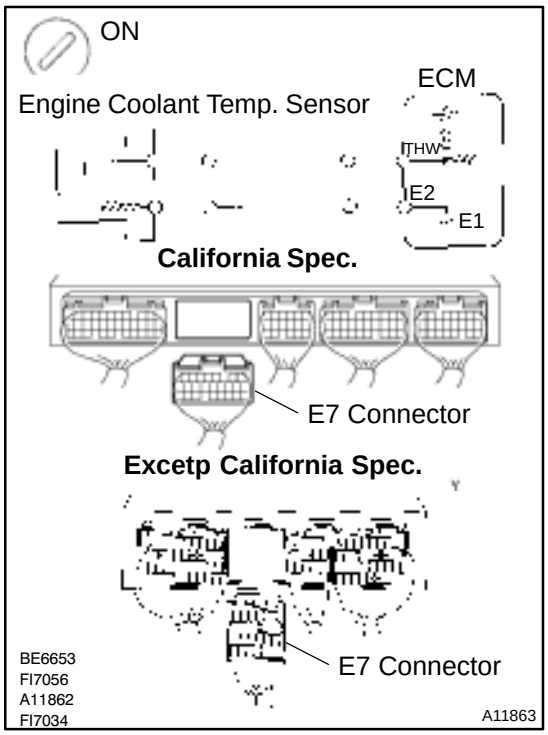

PREPARATION:

(a) Remove the glove compartment (See page SF–56).

(b) Disconnect the E7 connector from the ECM.

HINT:

The engine coolant temperature sensor connector is disconnected.

(c) Turn the ignition switch ON.

CHECK:

Read the temperature value on the OBD II scan tool or TOYOTA hand–held tester.

OK:

Temperature value: –40°C (–40°F)

OK → **Repair or replace harness or connector.**

NG → **Check and replace ECM (See page IN–28).**

DTC	P0116	Engine Coolant Temp. Circuit Range/Performance Problem

CIRCUIT DESCRIPTION

Refer to DTC P0115 on page DI–213.

DTC No.	DTC Detecting Condition	Trouble Area
P0116	If THW < –6.7°C (19.4°F) or THA < –6.7°C (19.4°F) 20 min. or more after starting engine, engine coolant temp. sensor value is 15°C (59°F)*1 or 20°C (68°F)*2 or less (2 trip detection logic)	• Cooling system • Engine coolant temp. sensor
	If THW ⍰ –6.7°C (19.4°F) and THA ≧ –6.7°C (19.4°F) and 10°C (50°F) at engine start, 5 min. or more after starting engine, engine coolant temp. sensor value is 30°C (86°F)*1 or 20°C (48°F)*2 or less (2 trip detection logic)	
	If THW ≧ 10°C (50°F) and THA ≧ 10°C (50°F) at engine start, 2 min. or more after starting engine, engine coolant temp. sensor value is 20°C (68°F)*1 or 30°C (86°F)*2 or less (2 trip detection logic)	
	When THW ⍰ 35°C (95°F) and 60°C (140°F), THA ≧ –6.7°C (19.4°F) when starting engine, conditions (a) and (b) continue: (2 trip detection logic) (a) Vehicle speed is changing (Not stable) (b) Water temp. change is lower than 3°C (5.4°F) from water temp. since when starting engine	
	In case that reading value of water temp. sensor will not change more than 1°C (1.8°F) even after repeating 6 trips (detection logic) of adjusting speed pattern with THW more than 60°C (140°F) when starting engine	

*1: Except California Spec.
*2: California Spec.

INSPECTION PROCEDURE

HINT:

- If DTCs P0115 and P0116 are output simultaneously, engine coolant temperature sensor circuit may be open. Perform troubleshooting of DTC P0115 first.
- Read freeze frame data using TOYOTA hand–held tester or OBD II scan tool. Because freeze frame records the engine conditions when the malfunction is detected. When troubleshooting, it is useful for determining whether the vehicle was running or stopped, the engine was warmed up or not, the air–fuel ratio was lean or rich, etc. at the time of the malfunction.

1	Are there any other codes (besides DTC P0116) being output?

YES → Go to relevant DTC chart (See page DI–192).

NO

2	**Check thermostat (See page CO–11).**

NG → **Replace thermostat.**

OK

Replace engine coolant temperature sensor.

DTC	P0120	Throttle/Pedal position Sensor/Switch ”A” Circuit Malfunction

CIRCUIT DESCRIPTION

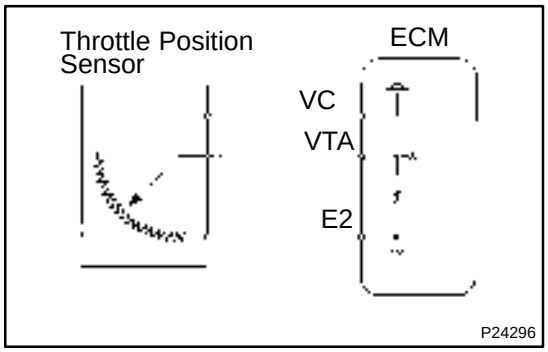

The throttle position sensor is mounted in the throttle body and detects the throttle valve opening angle. When the throttle valve is fully closed, a voltage of approximately 0.3 – 1.0 V is applied to terminal VTA of the ECM. The voltage applied to terminals VTA of the ECM increases in proportion to the opening angle of the throttle valve and becomes approximately 2.7 – 5.2 V when the throttle valve is fully opened. The ECM judges the vehicle driving conditions from these signals input from terminals VTA and uses them as one of the conditions to decide the air–fuel ratio correction, power increase correction and fuel–cut control etc.

DTC No.	DTC Detecting Condition	Trouble Area
P0120	Condition (a) or (b) continues: (a) VTA < 0.1 V (b) VTA > 4.9 V	• Open or short in throttle position sensor circuit • Throttle position sensor • ECM

HINT:

After confirming DTC P0120, use the OBD II scan tool or TOYOTA hand–held tester to confirm the throttle valve opening percentage and closed throttle position switch condition.

Throttle valve opening position expressed as percentage		Trouble Area
Throttle valve fully closed	Throttle valve fully open	
0 %	0 %	• VCC (California Spec.) VC (Except California Spec.) circuit open • VTA circuit open or short
Approx. 100 %	Approx. 100 %	• E2 line open

WIRING DIAGRAM

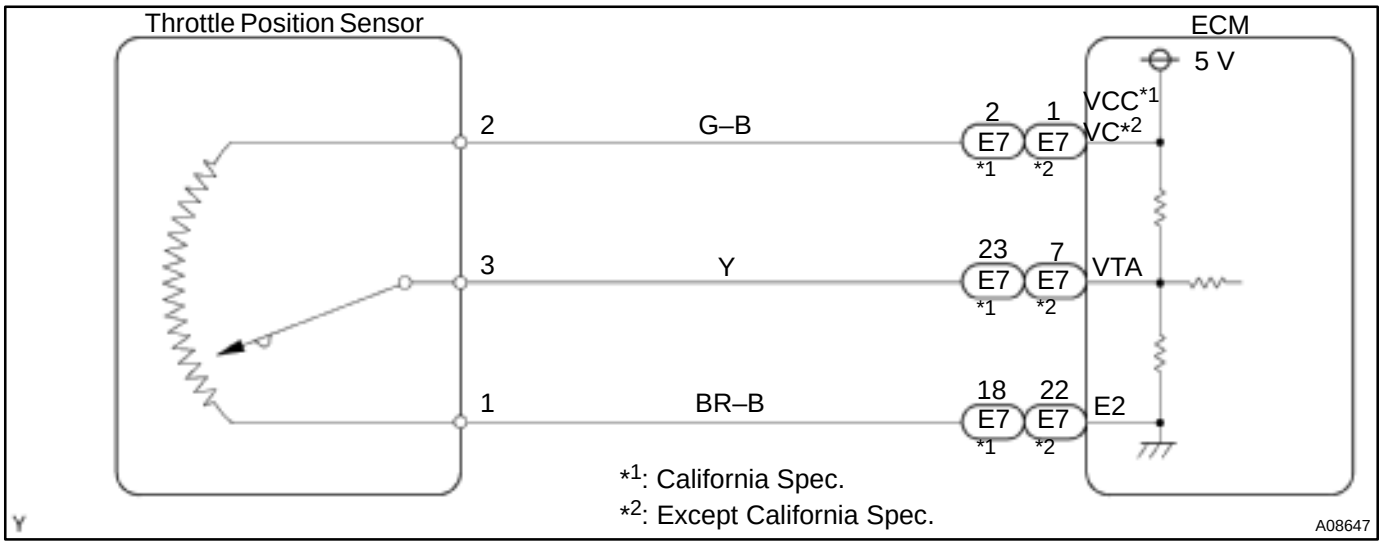

INSPECTION PROCEDURE

HINT:

- If DTCs P0110, P0115 and P0120 are output simultaneously, E2 (sensor ground) may be open.
- Read freeze frame data using TOYOTA hand–held tester or OBD II scan tool. Because freeze frame records the engine conditions when the malfunction is detected. When troubleshooting, it is useful for determining whether the vehicle was running or stopped, the engine was warmed up or not, the air–fuel ratio was lean or rich, etc. at the time of the malfunction.

1	**Connect OBD II scan tool or TOYOTA hand–held tester, and read the throttle valve opening percentage.**

PREPARATION:

(a) Connect the OBD II scan tool or TOYOTA hand–held tester to DLC3.

(b) Turn the ignition switch ON and push the OBD II scan tool or TOYOTA hand–held tester main switch ON.

CHECK:

Read the throttle valve opening percentage.

OK:

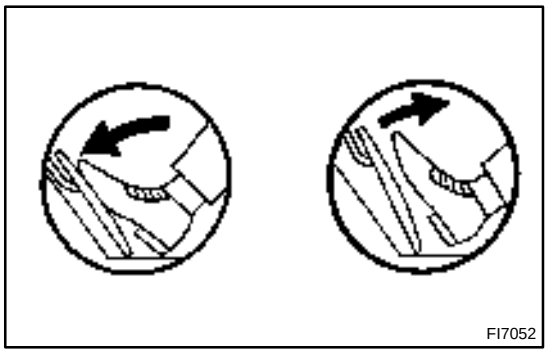

Throttle valve	Throttle valve opening position expressed as percentage
Fully open	Approx. 75 %
Fully closed	Approx. 10 %

OK → **Check for intermittent problems (See page DI–182).**

NG

2	**Check voltage between terminal 2 of throttle position sensor connector and body ground.**

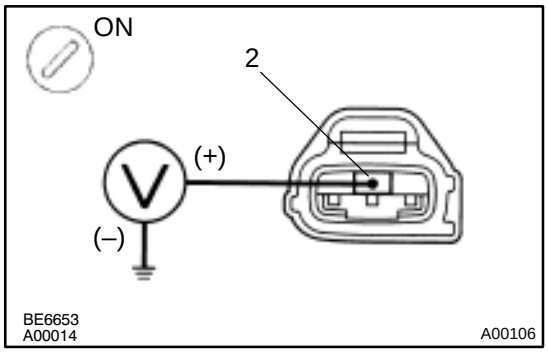

PREPARATION:

(a) Disconnect the throttle position sensor connector.

(b) Turn the ignition switch ON.

CHECK:

Measure the voltage between terminal 2 of the throttle position sensor connector and body ground.

OK:

Voltage: 4.5 – 5.5 V

NG → **Go to step 5.**

OK

3	**Check throttle position sensor (See page SF–29).**

NG → **Replace throttle position sensor.**

OK

4	**Check voltage between terminals VTA and E2 of ECM connector.**

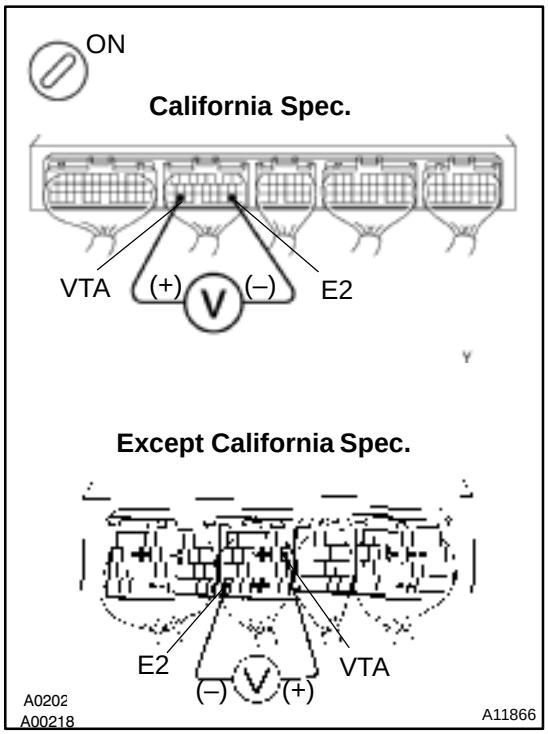

PREPARATION:

(a) Remove the glove compartment (See page SF–56).

(b) Turn the ignition switch ON.

CHECK:

Measure the voltage between terminals VTA and E2 of the ECM connector.

OK:

Throttle Valve	Voltage
Fully closed	0.3 – 1.0 V
Fully open	2.7 – 5.2 V

NG → **Check for open and short in harness and connector in VTA circuit between ECM and throttle position sensor (See page IN–28).**

OK

Check and replace ECM (See page IN–28).

5	Check voltage between terminals VCC (California Spec.) VC (Except California Spec.) and E2 of ECM of connector.

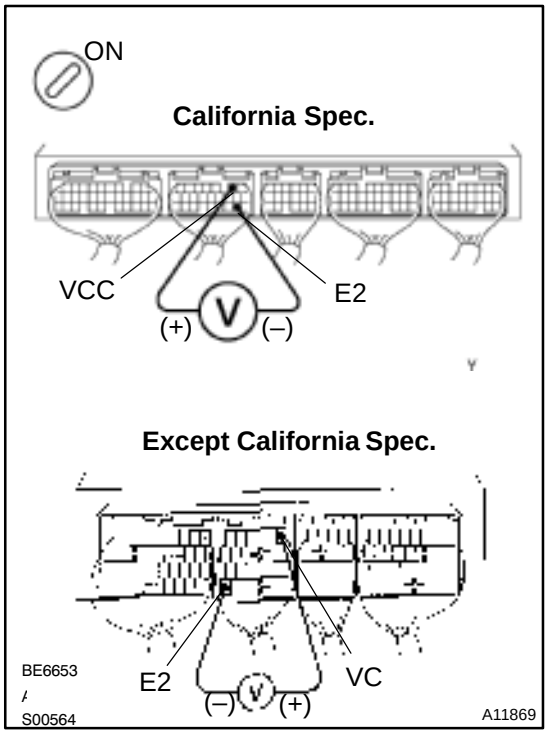

PREPARATION:

(a) Remove the glove compartment (See page SF–56).

(b) Turn the ignition switch ON.

CHECK:

Measure the voltage between terminals VCC or VC and E2 of the ECM connector.

OK:

Voltage: 4.5 – 5.5 V

NG → **Check and replace ECM (See page IN–28).**

OK

Check for open in harness and connector in VCC or VC circuit between ECM and throttle position sensor (See page IN–28).

DI0RW–08

DTC	P0121	Throttle/Pedal Position Sensor/Switch ”A” Circuit Range/Performance Problem

CIRCUIT DESCRIPTION

Refer to DTC P0120 on page DI–219.

DTC No.	DTC Detecting Condition	Trouble Area
P0121	While vehicle speed drops from 30 km/h (19 mph) or more to 0 km/h (0 mph), output value of throttle position sensor is out of applicable range (2 trip detection logic)	• Throttle position sensor

INSPECTION PROCEDURE

HINT:

Read freeze frame data using TOYOTA hand–held tester or OBD II scan tool. Because freeze frame records the engine conditions when the malfunction is detected. When troubleshooting, it is useful for determining whether the vehicle was running or stopped, the engine was warmed up or not, the air–fuel ratio was lean or rich, etc. at the time of the malfunction.

1	**Are there any other codes (besides DTC P0121) being output?**

YES → **Go to relevant DTC chart (See page DI–192).**

NO

Replace throttle position sensor.

DI5C4–04

DTC	P0125	Insufficient Coolant Temp. for Closed Loop Fuel Control (California Spec.)

CIRCUIT DESCRIPTION

To obtain a high purification rate for the CO, HC and NOx components of the exhaust gas, a three–way catalytic converter is used, but for the most efficient use of the three–way catalytic converter, the air–fuel ratio must be precisely controlled so that it is always close to the stoichiometric air–fuel ratio.

The A/F sensor has the characteristic that provides output voltage* approximately proportional to the existing air–fuel ratio. The A/F sensor output voltage* is used to provide feedback for the ECM to control the air–fuel ratio.

By the A/F sensor output, the ECM can determine the deviation amount from the stoichiometric air–fuel ratio and control the proper injection time immediately. If the A/F sensor is malfunctioning, ECM is unable to perform accurate air–fuel ratio control.

The A/F sensor is equipped with a heater which heats the zirconia element. The heater is controlled by the ECM. When the intake air volume is low (the temp. of the exhaust gas is low), current flows to the heater to heat the sensor for accurate oxygen concentration detection.

*: The voltage value changes at the inside of the ECM only.

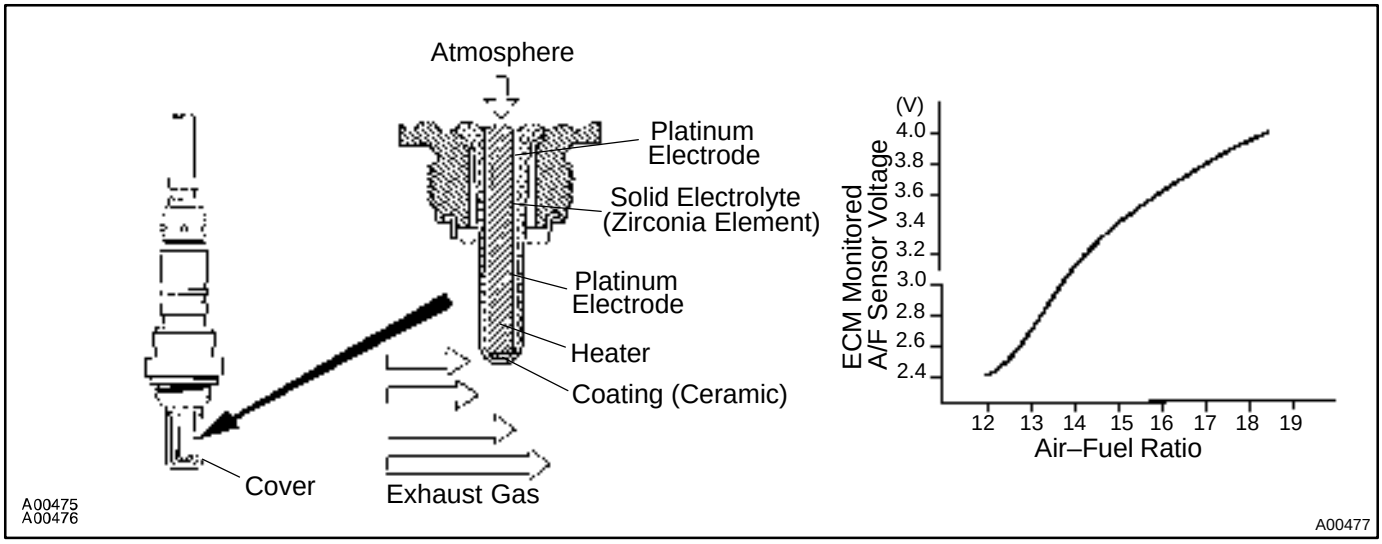

DTC No.	DTC Detecting Condition	Trouble Area
P0125	After engine is warmed up, A/F sensor output* does not change when conditions (a), (b) and (c) continue for at least 1.5 min.: *: Output value changes at inside of ECM only (a) Engine speed: 1,500 rpm or more (b) Vehicle speed: 40 – 100 km/h (25 – 62 mph) (c) Throttle valve does not fully closed (d) After starting engine ≧ 140 sec.	• Open or short in A/F sensor (bank 1 sensor 1) circuit • A/F sensor (bank 1 sensor 1) • Air induction system • Fuel pressure • Injector • Gas leakage on exhaust system • ECM

HINT:

- After confirming DTC P0125, use the OBD II scan tool or TOYOTA hand–held tester to confirm voltage output of the heated oxygen sensor (bank 1 sensor 1) from the CURRENT DATA.
- The ECM controls the voltage of the AF1+ and AF1– terminals of the ECM to the fixed voltage. Therefore, it is impossible to confirm the A/F sensor output voltage without OBD II scan tool or TOYOTA hand–held tester.

- OBD II scan tool (excluding TOYOTA hand–held tester) displays the one fifth of the A/F sensor output voltage which is displayed on the TOYOTA hand–held tester.

WIRING DIAGRAM

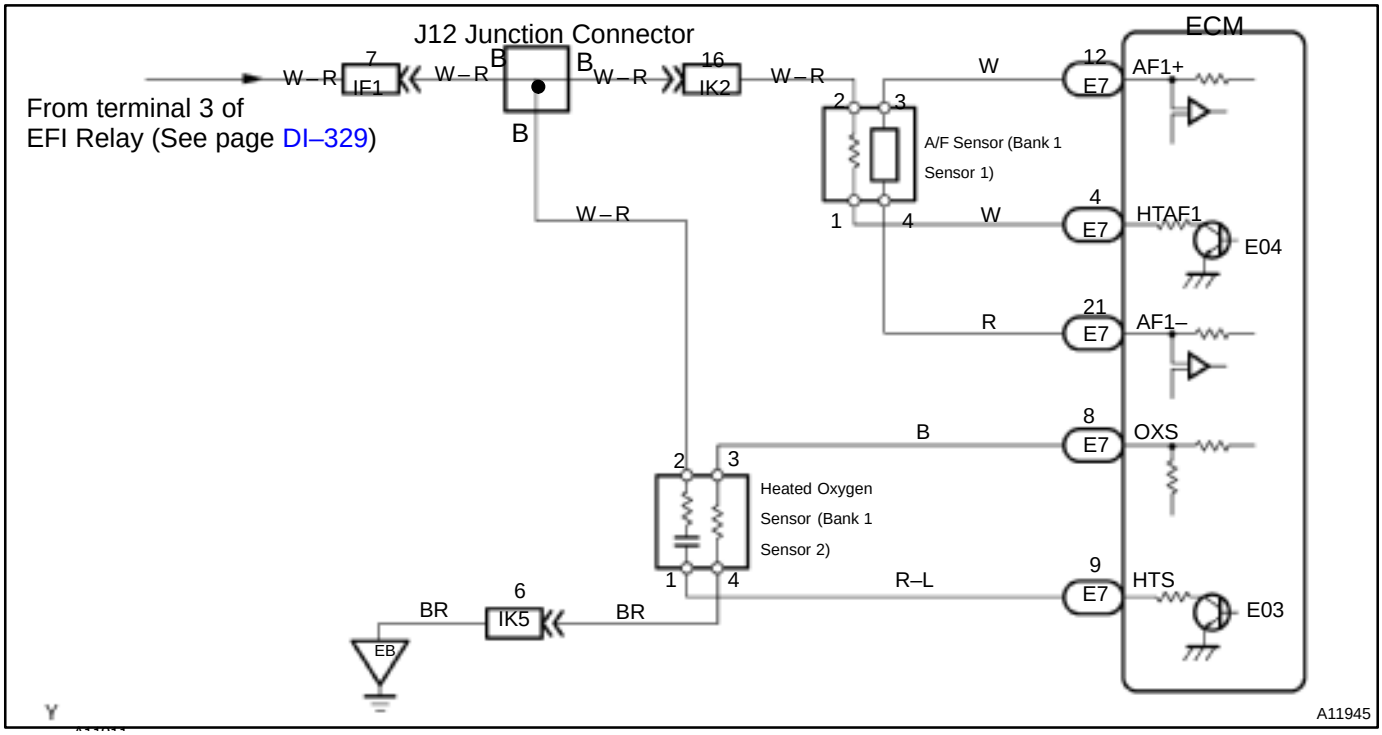

INSPECTION PROCEDURE

HINT:

- If the vehicle run out of fuel, the air–fuel ratio is LEAN and DTC P0125 will be recorded. The MIL then comes on.
- Read freeze frame data using TOYOTA hand–held tester or OBD II scan tool. Because freeze frame records the engine conditions when the malfunction is detected. When troubleshooting, it is useful for determining whether the vehicle was running or stopped, the engine was warmed up or not, the air–fuel ratio was lean or rich, etc. at the time of the malfunction.

1	**Are there any other codes (besides DTC P0125) being output?**

YES → **Go to relevant DTC chart (See page DI–192).**

NO

2	**Connect OBD II scan tool or TOYOTA hand–held tester, and read value for voltage output of A/F sensor (bank 1 sensor 1).**

PREPARATION:

(a) Connect the OBD II scan tool or TOYOTA hand–held tester to the DLC3.

(b) Warm up the A/F sensor with the engine speed at 2,500 rpm for approx. 90 sec.

CHECK:

Read the voltage value of the A/F sensor on the screen of the OBD II scan tool or TOYOTA hand–held tester when you perform all the following conditions.

HINT:

The voltage of the AF1+ terminal of the ECM is 3.3 fixed and the AF1– terminal is 3.0 V fixed. Therefore, it is impossible to check the A/F sensor output voltage at the terminals (AF1+/AF1–) of the ECM.

OK:

Condition	A/F Sensor Voltage value
Engine idling	• Not remains at 3.3. V (0.660 V*) • Not remains at 3.8 V (0.76 V*) or more • Not remains at 2.8 V (0.56 V*) or less *: When you use the OBD II scan tool (excluding TOYOTA hand–held tester)
Engine racing	
Driving at engine speed 1,500 rpm or more and vehicle speed 40 km/h (25 mph) or move, and operate throttle valve open and close	

HINT:

- During fuel enrichment, there is a case that the output voltage of the A/F sensor is below 2.8 V (0.56 V*), it is normal.
- During fuel cut, there is a case that the output voltage of the A/F sensor is above 3.8 V (0.76 V*), it is normal.
- If the output voltage of the A/F sensor remains at 3.30 V (0.660 V*) even after performing all the above conditions, the A/F sensor circuit may be open.
- If the output voltage of the A/F sensor remains at 3.8 V (0.76 V*) or more, or 2.8 V (0.56 V*) or less even after performing all the above conditions, A/F sensor circuit may be short.

*: When you use the OBD II scan tool (excluding TOYOTA hand–held tester).

OK → **Go to step 9.**

NG

3	**Check for open and short in harness and connector between ECM and A/F sensor (bank 1 sensor 1) (See page IN–28).**

NG → **Repair or replace harness or connector.**

OK

4	**Check resistance of A/F sensor heater (bank 1 sensor 1) (See page SF–53).**

NG → Replace A/F sensor.

OK

5	Check air induction system (See page SF–1).

NG → Repair or replace.

OK

6	Check fuel pressure (See page SF–5).

NG → Check and repair fuel pump, pressure regulator, fuel pipe line and filter (See page SF–1).

OK

7	Check injector injection (See page SF–20).

NG → Replace injector.

OK

8	Check gas leakage on exhaust system.

NG → Repair or replace.

OK

Replace A/F sensor (bank 1 sensor 1).

9	Perform confirmation driving pattern (See page DI–301).

Go

10	Is there DTC P0125 being output again?

YES → Check and replace ECM (See page IN–28).

NO

11	Did vehicle runs out of fuel in past?

NO → Check for intermittent problems (See page DI–182).

YES

DTC P0125 is caused by running out of fuel.

DTC	P0125	Insufficient Coolant Temp. for Closed Loop Fuel Control (Except California Spec.)

CIRCUIT DESCRIPTION

To obtain a high purification rate for the CO, HC and NOx components of the exhaust gas, a three–way catalytic converter is used, but for the most efficient use of the three–way catalytic converter, the air–fuel ratio must be precisely controlled so that it is always close to the stoichiometric air–fuel ratio.

The oxygen sensor has the characteristic which its output voltage changes suddenly in the vicinity of the stoichiometric air–fuel ratio. This characteristic is used to detect the oxygen concentration in the exhaust gas and provide the ECM with feedback to control the air–fuel ratio.

When the air–fuel ratio becomes LEAN, the oxygen concentration in the exhaust increases and the oxygen sensor informs the ECM of the LEAN condition (small electromotive force: <0.45 V).

When the air–fuel ratio is RICHER than the stoichiometric air–fuel ratio the oxygen concentration in the exhaust gas is reduced and the oxygen sensor informs the ECM of the RICH condition (large electromotive force: >0.45 V).

The ECM judges by the electromotive force from the oxygen sensor whether the air–fuel ratio is RICH or LEAN and controls the injection time accordingly. However, if malfunction of the oxygen sensor causes output of abnormal electromotive force, the ECM is unable to perform accurate air–fuel ratio control. The heated oxygen sensors include a heater which heats the zirconia element. The heater is controlled by the ECM. When the intake air volume is low (the temperature of the exhaust gas is low) current flows to the heater to heat the sensor for accurate oxygen concentration detection.

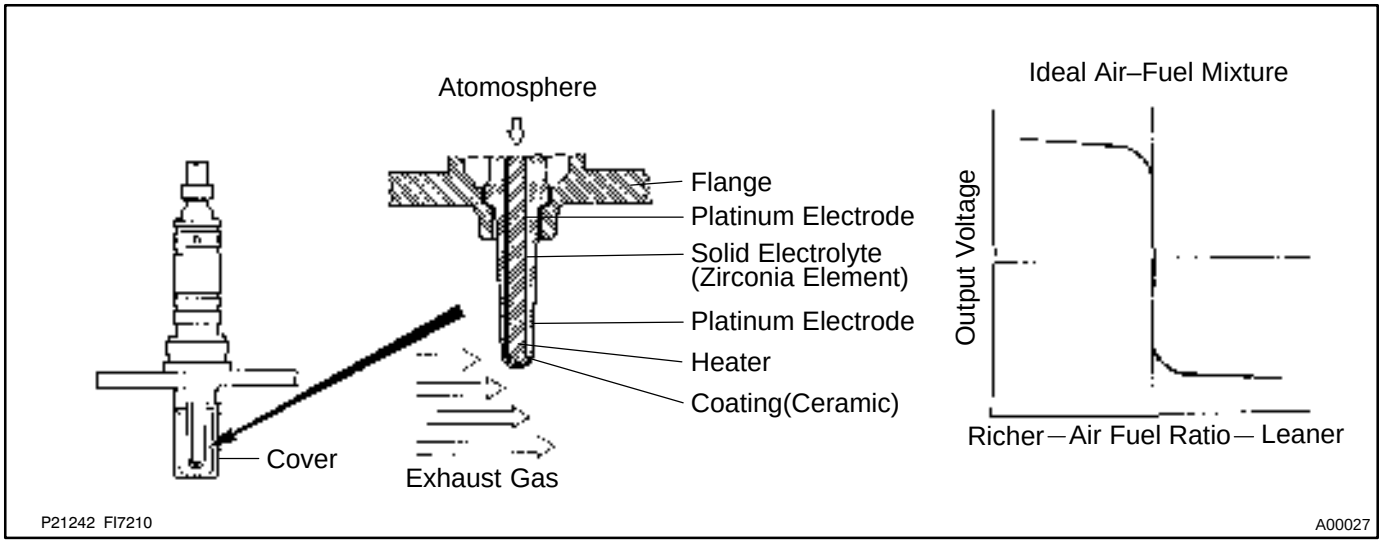

DTC No.	DTC Detecting Condition	Trouble Area
P0125	After engine is warmed up, heated oxygen sensor output does not indicate RICH (≧0.45 V) even once when conditions (a), (b), (c) and (d) continue for at least 1.5 min.: (a) Engine speed: 1,500 rpm or more (b) Vehicle speed: 40 – 100 km/h (25 – 62 mph) (c) Throttle valve does not fully closed (d) 140 sec. or more after starting engine	• Open or short in heated oxygen sensor (bank 1 sensor 1) circuit • Heated oxygen sensor (bank 1 sensor 1) • Air induction system • Fuel pressure • Injector • Gas leakage on exhaust sytem • ECM

HINT:

After confirming DTC P0125, use the OBD II scan tool or TOYOTA hand – held tester to confirm voltage output of the heated oxygen sensor (bank 1 sensor 1) from the CURRENT DATA.

If the voltage output of the heated oxygen sensor is less than 0.1 V, the heated oxygen sensor circuit may be open or short.

WIRING DIAGRAM

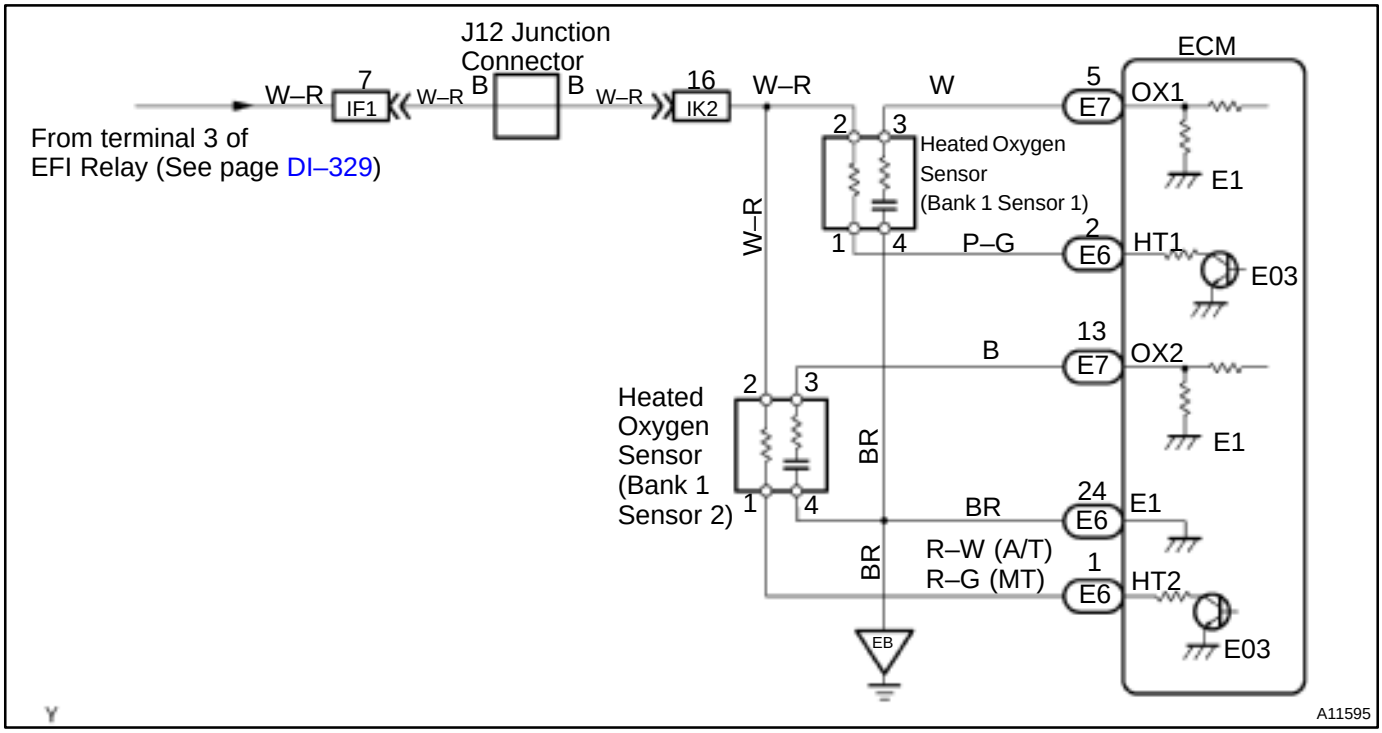

INSPECTION PROCEDURE

HINT:

- If the vehicle run out of fuel, the air–fuel ratio is LEAN and DTC P0125 will be recorded. The MIL then comes on.
- Read freeze frame data using TOYOTA hand–held tester or OBD II scan tool. Because freeze frame records the engine conditions when the malfunction is detected. When troubleshooting, it is useful for determining whether the vehicle was running or stopped, the engine was warmed up or not, the air–fuel ratio was lean or rich, etc. at the time of the malfunction.

1	**Are there any other codes (besides DTC P0125) being output?**

YES → **Go to relevant DTC chart (See page DI–192).**

NO

2	**Connect OBD II scan tool or TOYOTA hand–held tester, and read value for voltage output of heated oxygen sensor (bank 1 sensor 1).**

PREPARATION:

(a) Connect the OBD II scan tool or TOYOTA hand–held tester to the DLC3.
(b) Warm up the engine to normal operating temperature (above 75˚C (167˚F)).

CHECK:

Read the voltage output of heated oxygen sensor when the engine is suddenly raced.

HINT:

Perform quick racing to 4,000 rpm 3 times using the accelerator pedal.

OK:

Heated oxygen sensor output a RICH signal (0.45 V or more) at least once.

OK	Check and replace ECM (See page IN–28).

NG

3	Check for open and short in harness and connector between ECM and heated oxygen sensor (bank 1 sensor 1) (See page IN–28).

NG	Repair or replace harness or connector.

OK

4	Check whether misfire is occurred or not by monitoring DTC and data list.

NG	Perform troubleshooting for misfire (See page DI–312).

OK

5	Check air induction system (See page SF–1).

NG	Repair or replace.

OK

6	Check fuel pressure (See page SF–5).

NG	Check and repair fuel pump, pressure regulator, fuel pipe line and filter (See page SF–1).

OK

7	Check injector injection (See page SF–20).

NG → Replace injector.

OK

8	Check gas leakage on exhaust system.

NG → Repair or replace.

OK

Replace heated oxygen sensor (bank 1 sensor 1).

9	Perform confirmation driving pattern (See page DI–234).

Go

10	Is there DTC P0125 being output again?

YES → Check and replace ECM (See page IN–28).

NO

11	Did vehicle runs out of fuel in past?

NO → Check for intermittent problems (See page DI–182).

NO

DTC P0125 is caused by running out of fuel.

DI0RY–05

DTC	P0130	Oxygen Sensor Circuit Malfunction (Bank 1 Sensor 1) (Except California Spec.)

CIRCUIT DESCRIPTION

Refer to DTC P0125 on page DI–229.

DTC No.	DTC Detecting Condition	Trouble Area
P0130	Voltage output of heated oxygen sensor remains at 0.35 V or more, or 0.55 V or less, during idling after engine is warmed up (2 trip detection logic)	• Open or short in heated oxygen sensor circuit • Heated oxygen sensor • Air induction system • Fuel pressure • Injector • ECM

HINT:

- Sensor 1 refers to the sensor closer to the engine body.
- The heated oxygen sensor's output voltage and the short−term fuel trim value can be read using the OBD II scan tool or TOYOTA hand−held tester.

WIRING DIAGRAM

Refer to DTC P0125 on page DI–229.

CONFIRMATION DRIVING PATTERN

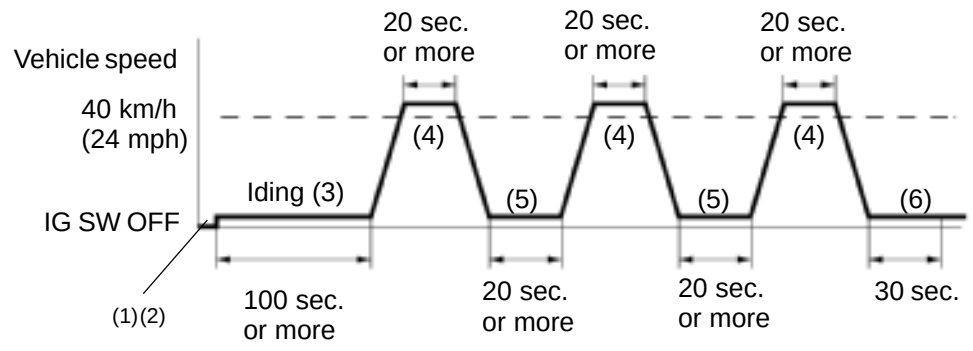

A09299

(1) Connect the TOYOTA hand–held tester to the DLC3.
(2) Switch the TOYOTA hand–held tester from the normal mode to the check mode (See page DI–182).
(3) Start the engine and warm it up with all accessory switches OFF.
(4) Drive the vehicle at 50 – 65 km/h (31 – 40 mph) for 1 – 3 min. to warm up the heated oxygen sensor.
(5) Let the engine idle for 1 min.

HINT:

If a malfunction exists, the MIL will light up during step (5).

NOTICE:
If the conditions in this test are not strictly followed, detection of the malfunction will not be possible. If you do not have a TOYOTA hand–held tester, turn the ignition switch OFF after performing steps (3) to (5), then perform steps (3) to (5) again.

INSPECTION PROCEDURE

HINT:
Read freeze frame data using TOYOTA hand–held tester or OBD II scan tool. Because freeze frame records the engine conditions when the malfunction is detected. When troubleshooting, it is useful for determining whether the vehicle was running or stopped, the engine was warmed up or not, the air–fuel ratio was lean or rich, etc. at the time of the malfunction.

1	**Are there any other codes (besides DTC P0130) being output?**

YES → **Go to relevant DTC chart (See page DI–192).**

NO

2	**Check output voltage of heated oxygen sensor during idling.**

PREPARATION:
Warm up the heated oxygen sensor with the engine speed at 2,500 rpm for approx. 90 sec.
CHECK:
Use the OBD II scan tool or TOYOTA hand–held tester to read the output voltage of the heated oxygen sensor during idling.
OK:

Heated oxygen sensor output voltage:
Alternates repeatedly between less than 0.35 V and more than 0.55 V (See the following table).

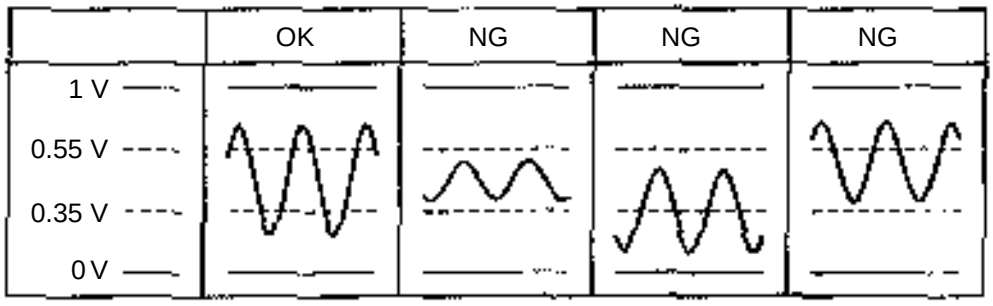

OK → **Go to step 8.**

NG

3	Check for open and short in harness and connector between ECM and heated oxygen sensor (See page IN–28).

NG → Repair or replace harness or connector.

OK ↓

4	Check air induction system (See page SF–1).

NG → Repair or replace.

OK ↓

5	Check fuel pressure (See page SF–5).

NG → Check and repair fuel pump, pressure regulator, fuel pipe line and filter (See page SF–1).

OK ↓

6	Check injector injection (See page SF–20).

NG → Replace injector.

OK ↓

Replace heated oxygen sensor.

7	Perform confirmation driving pattern.

Go ↓

8	**Is there DTC P0130 being output again?**

NO → **Check for intermittent problems (see page DI–182).**

YES

Check and replace ECM (See page IN–28).

DI55T–02

DTC	P0133	Oxygen Sensor Circuit Slow Response (Bank 1 Sensor 1) (Except California Spec.)

CIRCUIT DESCRIPTION

Refer to DTC P0125 on page DI–229.

DTC No.	DTC Detecting Condition	Trouble Area
P0133	Response time for heated oxygen sensor's voltage output to change from rich to lean, or from lean to rich, is 1 sec. or more during idling after engine is warmed up (2 trip detection logic)	• Open or short in heated oxygen sensor circuit • Heated oxygen sensor • Air induction system • Fuel pressure • Injector • ECM

HINT:
Sensor 1 refers to the sensor closer to the engine body.

WIRING DIAGRAM

Refer to DTC P0125 on page DI–229.

INSPECTION PROCEDURE

HINT:
Read freeze frame data using TOYOTA hand–held tester or OBD II scan tool. Because freeze frame records the engine conditions when the malfunction is detected. When troubleshooting, it is useful for determining whether the vehicle was running or stopped, the engine was warmed up or not, the air–fuel ratio was lean or rich, etc. at the time of the malfunction.

1	**Are there any other codes (besides DTC P0133) being output?**

YES → **Go to relevant DTC chart (See page DI–192).**

NO

2	**Check output voltage of heated oxygen sensor during idling.**

PREPARATION:
Warm up the heated oxygen sensor with the engine speed at 2,500 rpm for approx. 90 sec.
CHECK:
Use the OBD II scan tool or TOYOTA hand–held tester to read the output voltage of the heated oxygen sensor during idling.

OK:

Heated oxygen sensor output voltage:
Alternates repeatedly between less than 0.35 V and more than 0.55 V (See the following table).

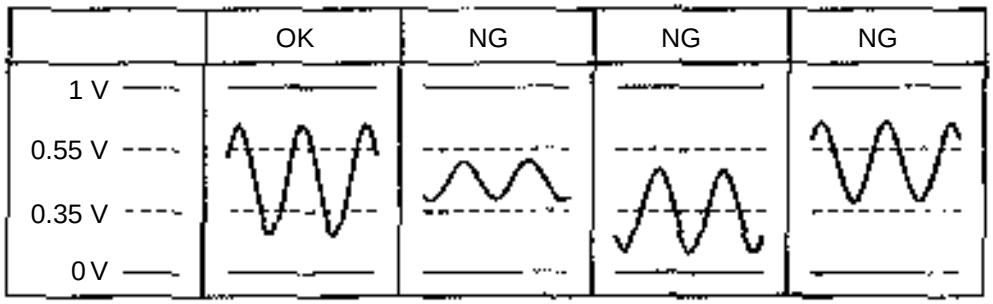

OK	Go to step 8.

NG

3	Check for open and short in harness and connector between ECM and heated oxygen sensor (See page IN–28).

NG	Repair or replace harness or connector.

OK

4	Check air induction system (See page SF–1).

NG	Repair or replace.

OK

5	Check fuel pressure (See page SF–5).

NG	Check and repair fuel pump, pressure regulator, fuel pipe line and filter (See page SF–1).

OK

6	Check injector injection (See page SF–20).

NG → Replace injector.

OK →

Replace heated oxygen sensor.

7	Perform confirmation driving pattern (See page DI–234).

Go →

8	Is there DTC P0133 being output again?

NO → Check for intermittent problems (see page DI–182).

YES →

Check and replace ECM (See page IN–28).

DTC	P0135	Oxygen Sensor Heater Circuit Malfunction (Bank 1 Sensor 1) (Except California Spec.)

DTC	P0141	Oxygen Sensor Heater Circuit Malfunction (Bank 1 Sensor 2)

CIRCUIT DESCRIPTION

Refer to DTC P0125 on page DI–224 or DI–229.

DTC No.	DTC Detecting Condition	Trouble Area
P0135 P0141	When heater operates, heater current exceeds 2.35 A (2 trip detection logic)	• Open or short in heater circuit of heated oxygen sensor • Heated oxygen sensor heater • ECM
	Heater current of 0.2 A or less when heater operates (2 trip detection logic)	

HINT:

- Sensor 1 refers to the sensor closer to the engine body (Except California Spec.).
- Sensor 2 refers to the sensor farther away from the engine body.

WIRING DIAGRAM

Refer to DTC P0125 on page DI–224 or DI–229.

INSPECTION PROCEDURE

HINT:

Read freeze frame data using TOYOTA hand–held tester or OBD II scan tool. Because freeze frame records the engine conditions when the malfunction is detected. When troubleshooting, it is useful for determining whether the vehicle was running or stopped, the engine was warmed up or not, the air–fuel ratio was lean or rich, etc. at the time of the malfunction.

1	Check voltage between terminals HT1 (Except California Spec.), HTS (California Spec.), HT2 (Except California Spec.) of ECM connector and body ground.

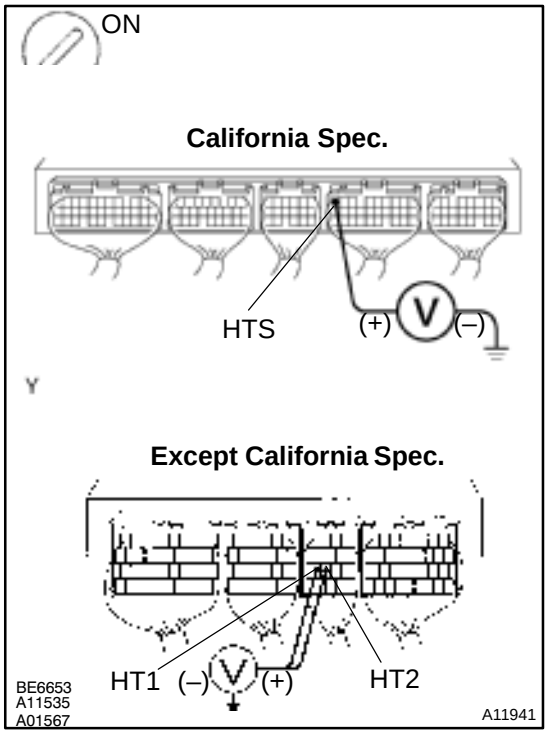

PREPARATION:

(a) Remove the glove compartment (See page SF–56).

(b) Turn the ignition switch ON.

CHECK:

Measure the voltage between terminals HT1, HT2 of the ECM connector and body ground.

HINT:

- Connect terminal HT1 to bank 1 sensor 1.
- Connect terminal HT2 or HTS to bank 1 sensor 2.

OK:

Voltage: 9 – 14 V

OK	Check and replace ECM (See page IN–28).

NG

2	Check resistance of heated oxygen sensor heater (See page SF–55).

NG	Replace heated oxygen sensor.

OK

Check and repair harness or connector between EFI main relay (Marking: EFI) and heated oxygen sensor, and heated oxygen sensor and ECM (See page IN–28).

DTC	P0136	Oxygen Sensor Circuit Malfunction (Bank 1 Sensor 2)

CIRCUIT DESCRIPTION

Refer to DTC P0125 on page DI–224 or DI–229.

DTC No.	DTC Detecting Condition	Trouble Area
P0136	Voltage output of heated oxygen sensor remains at 0.45 V*1/0.40 V*2 or less to 0.60 V*1/0.50 V*2 or more when vehicle is driven at 50 km/h (31 mph) or more after engine is warmed up (2 trip detection logic) *1: California Spec. *2: Except California Spec.	• Open or short in heated oxygen sensor circuit • Heated oxygen sensor

HINT:
Sensor 2 refers to the sensor farther away from the engine body.

WIRING DIAGRAM

Refer to DTC P0125 on page DI–224 or DI–229.

INSPECTION PROCEDURE

HINT:
Read freeze frame data using TOYOTA hand–held tester or OBD II scan tool. Because freeze frame records the engine conditions when the malfunction is detected. When troubleshooting, it is useful for determining whether the vehicle was running or stopped, the engine was warmed up or not, the air–fuel ratio was lean or rich, etc. at the time of the malfunction.

1	**Are there any other codes (besides DTC P0136) being output?**

YES → **Go to relevant DTC chart (See page DI–192).**

NO

2	**Check for open and short in harness and connector between ECM and heated oxygen sensor (See page IN–28).**

NG → **Repair or replace harness or connector.**

OK

3	**Check output voltage of heated oxygen sensor.**

PREPARATION:

(a) Connect the OBD II scan tool or TOYOTA hand–held tester to the DLC3.

(b) Warm up the engine to normal operating temperature.

CHECK:

Read the voltage output of the heated oxygen sensor when the engine is suddenly raced.

HINT:

Perform quick racing to 4,000 rpm 3 min. using the accelerator pedal.

OK:

Heated oxygen sensor output voltage:
Alternates from 0.45 V*1/0.40 V*2 or less to 0.60 V*1/0.50 V*2 or more.
***1: California Spec.**
***2: Except California Spec.**

OK → **Check that each connector is properly connected.**

NG

Replace heated oxygen sensor.

DTC	P0171	System too Lean (Fuel Trim) (California Spec.)

DTC	P0172	System too Rich (Fuel Trim) (California Spec.)

CIRCUIT DESCRIPTION

Fuel trim refers to the feedback compensation value compared to the basic injection time. Fuel trim includes short–term fuel trim and long–term fuel trim.

Short–term fuel trim is the short–term fuel compensation used to maintain the air–fuel ratio at its ideal theoretical value. The signal from the A/F sensor is approximately proportional to the existing air–fuel ratio, and ECM comparing it with the ideal theoretical value, the ECM reduces fuel volume immediately if the air–fuel ratio is rich and increases fuel volume if it is lean.

Long–term fuel trim compensates for the deviation from the central value of the short–term fuel trim stored up by each engine tolerance, and the deviation from the central value due to the passage of time and changes of environment.

If both the short–term fuel trim and long–term fuel trim exceed a certain value, it is detected as a malfunction and the MIL lights up.

DTC No.	DTC Detecting Condition	Trouble Area
P0171	When air fuel ratio feedback is stable after warming up engine, fuel trim is considerably in error on RICH side (2 trip detection logic)	• Air induction system • Injector blockage • Mass air flow meter • Engine coolant temp. sensor • Fuel pressure • Gas leakage on exhaust system • Open or short in A/F sensor (bank 1 sensor 1) circuit • A/F sensor (bank 1 sensor 1) • ECM
P0172	When air fuel ratio feedback is stable after warming up engine, fuel trim is considerably in error on LEAN side (2 trip detection logic)	• Injector leak blockage • Mass air flow meter • Engine coolant temp. sensor • Ignition system • Fuel pressure • Gas leakage on exhaust system • Open or short in A/F sensor (bank 1 sensor 1) circuit • A/F sensor (bank 1 sensor 1) • ECM

HINT:

- When the DTC P0171 is recorded, the actual air–fuel ratio is on the lean side. When DTC P0172 is recorded, the actual air–fuel ratio is on the rich side.
- If the vehicle runs out of fuel, the air–fuel ratio is lean and DTC P0171 is recorded. The MIL then comes on.
- If the total of the short–term fuel trim value and long–term fuel trim value is within ± 35 % (80°C (176°F) or more), the system is functioning normally.
- The A/F sensor (bank 1 sensor 1) output voltage and the short–term fuel trim value can be read using the OBD II scan tool or TOYOTA hand–held tester.

- The ECM controls the voltage of the AF1+ and AF1– terminals of the ECM to the fixed voltage. Therefore, it is impossible to confirm the A/F sensor output voltage without OBD II scan tool or TOYOTA hand–held tester.
- OBD II scan tool (excluding TOYOTA hand–held tester) displays the one fifth of the A/F sensor (bank 1 sensor 1) output voltage which is displayed on the TOYOTA hand–held tester.

WIRING DIAGRAM

Refer to DTC P0125 on page DI–224.

INSPECTION PROCEDURE

HINT:
Read freeze frame data using TOYOTA hand–held tester or OBD II scan tool. Because freeze frame records the engine conditions when the malfunction is detected When troubleshooting, it is useful for determining whether the vehicle was running or stopped, the engine warmed up or not, the air–fuel ratio was lean or rich, etc. at the time of the malfunction.

1	**Check air induction system (See page SF–1).**

NG → **Repair or replace.**

OK

2	**Check injector injection (See page SF–20).**

NG → **Replace injector.**

OK

3	**Check mass air flow meter (See page SF–27) and engine coolant temperature sensor (See page SF–47).**

NG → **Repair or replace.**

OK

4	**Check for spark and ignition (See page IG–1).**

NG → **Repair or replace.**

OK

5	**Check fuel pressure (See page SF–5).**

NG → **Check and repair fuel pump, pressure regulator, fuel pipe line and filter (See page SF–1).**

OK

6	**Check gas leakage on exhaust system.**

NG → **Repair or replace.**

OK

7	**Check output voltage A/F sensor (bank 1 sensor 1).**

PREPARATION:

(a) Connect the OBDII scan tool or TOYOTA hand–held tester to the DLC3.
(b) Warm up the A/F sensor with the engine speed at 2,500 rpm for approx. 90 sec.

CHECK:

Read the voltage value of the A/F sensor on the screen of the OBDII scan tool or TOYOTA hand–held tester, when you perform all the following conditions.

HINT:

The voltage of the AF1+ terminal of the ECM is 3.3 fixed AF1– terminal is 3.0 V fixed. Therefore, it is impossible to check the A/F sensor output voltage at the terminals (AF1+/AF1–) of the ECM.

OK:

Condition	A/F Sensor Voltage value
Engine idling	• Not remains at 3.30 V (0.660 V*) • Not remains at 3.8 V (0.76 V*) or more • Not remains at 2.8 V (0.56 V*) or less *: When you use the OBDII scan tool (excluding TOYOTA hand–held tester)
Engine racing	
Driving at engine speed 1,500 rpm or more and vehicle speed 40 km/h (25 mph) or more, and operate throttle valve open and close	

HINT:

- During fuel enrichment, there is a case that the output voltage of the A/F sensor is below 2.8 V (0.56 V*), it is normal.
- During fuel cut, there is case that the output voltage of the A/F sensor is above 3.8 V (0.76 V*), it is normal.
- If the output voltage of the A/F sensor remains at 3.30 V (0.660 V*) even after performing all the above conditions, the A/F sensor circuit may be open.
- If the output voltage of the A/F sensor remains at 3.8 V (0.76 V*) or more, or 2.8 V (0.56 V*) or less even after performing all the above conditions, the A/F sensor circuit may be short.

*: When you use the OBDII scan tool (excluding TOYOTA hand–held tester).

OK → **Go to step 9.**

NG

8	**Check for open and short in harness and connector between ECM and A/F sensor (bank 1 sensor 1) (See page IN–28).**

NG → **Repair or replace harness or connector.**

OK

Replace A/F sensor.

9	**Perform confirmation driving pattern (See page DI–301).**

Go

10	**Is there DTC P0171 or P0172 being output again?**

YES → **Check and replace ECM (See page IN–28).**

NO

11	**Did vehicle runs out of fuel in past?**

NO

Check for intermittent problems (See page DI–182).

YES

DTC P0171 or P0172 is caused by running out of fuel.

DI6WK–01

DTC	P0300	Random/Multiple Cylinder Misfire Detected

DTC	P0301	Cylinder 1 Misfire Detected

DTC	P0302	Cylinder 2 Misfire Detected

DTC	P0303	Cylinder 3 Misfire Detected

DTC	P0304	Cylinder 4 Misfire Detected

DTC	P0305	Cylinder 5 Misfire Detected

DTC	P0306	Cylinder 6 Misfire Detected

CIRCUIT DESCRIPTION

Misfire: The ECM uses the crankshaft position sensor and camshaft position sensor to monitor changes in the crankshaft rotation for each cylinder.

The ECM counts the number of times the engine speed change rate indicates that misfire has occurred. When the misfire rate equals or exceeds the count indicating that the engine condition has deteriorated, the MIL lights up.

If the misfire rate is high enough and the driving conditions will cause catalyst overheating, the MIL blinks when misfiring occurs.

DTC No.	DTC Detecting Condition	Trouble Area
P0300	Misfiring of random cylinders is detected during any particular 200 or 1,000 revolutions	• Open or short in engine wire • Connector connection • Vacuum hose connection • Ignition system • Injector • Fuel pressure • Mass air flow meter • Engine coolant temp. sensor • Compression pressure • Valve clearance • Valve timing • ECM
P0301 P0302 P0303 P0304 P0305 P0306	For any particular 200 revolutions for engine, misfiring is detected which can cause catalyst overheating (This causes MIL to blink)	
	For any particular 1,000 revolutions of engine, misfiring is detected which causes a deterioration in emission (2 trip detection logic)	

HINT:
When the 2 or more codes for a misfiring cylinder are recorded repeatedly but no Random Misfire code is recorded, it indicates that the misfires were detected and recorded at different times.

WIRING DIAGRAM

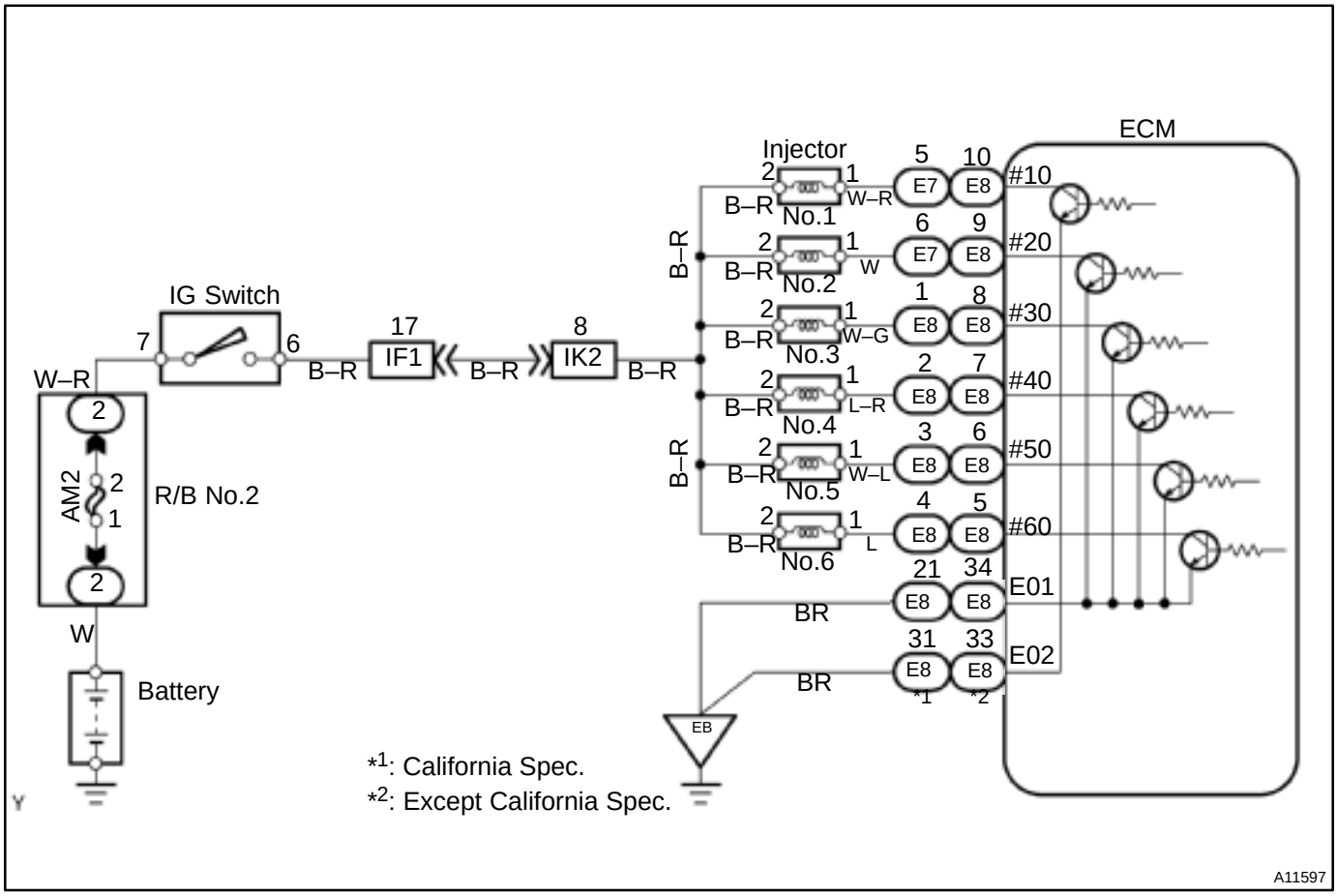

CONFIRMATION DRIVING PATTERN

(a) Connect the TOYOTA hand–held tester or OBD II scan tool.
(b) Record DTC and the freeze frame data.
(c) Use the TOYOTA hand–held tester to set to the check mode (See page DI–182).
(d) Drive the vehicle several times with the engine speed, load and its surrounding range shown with ENGINE SPD, CALC LOAD in the freeze frame data or MISFIRE RPM, MISFIRE LOAD in the data list. If you have no TOYOTA hand–held tester, turn the ignition switch OFF after the symptom is simulated the first time. Then repeat the simulation process again.

HINT:
In order to memorize DTC of misfire, it is necessary to drive around MISFIRE RPM, MISFIRE LOAD in the data list for the following period of time.

Engine Speed	Time
Idling	3 minutes 30 seconds or more
1,000 rpm	3 minutes or more
2,000 rpm	1 minute 30 seconds or more
3,000 rpm	1 minute or more

(e) Check whether there is misfire or not by monitoring DTC and the freeze frame data. After that, record them.
(f) Turn the ignition switch OFF and wait at least 5 seconds.

INSPECTION PROCEDURE

HINT:

- If it is the case that DTC besides misfire is memorized simultaneously, first perform the troubleshooting for them.
- Read freeze frame data using TOYOTA hand–held tester or OBD II scan tool. Because freeze frame records the engine conditions when the malfunction is detected. When troubleshooting, it is useful for determining whether the vehicle was running or stopped, the engine was warmed up or not, the air–fuel ratio was lean or rich, etc. at the time of the malfunction.
- When the vehicle is brought to the workshop and the misfire is not occurred, misfire can be confirmed by reproducing the condition of freeze frame data. Also, after finishing the repair, confirm that there is no misfire (See the confirmation driving pattern).
- When either of SHORT FT #1, LONG FT #1, SHORT FT #2 or LONG FT#2 in the freeze frame data is besides the range of ±20 %, there is a possibility that the air–fuel ratio is inclining either to RICH (–20 % or less) or LEAN (+20 % or more).
- When COOLANT TEMP in the freeze frame data is less than 80˚C (176˚F), there is a possibility of misfire only during warmed up.
- In the case that misfire cannot be reproduced, the reason may be because of the driving with lack of fuel, the use of improper fuel, a stain of the ignition plug, and etc.

1	**Check wire harness, connector and vacuum hose in engine room.**

CHECK:

(a) Check the connection conditions of wire harness and connector.
(b) Check the disconnection, piping and break of vacuum hose.

NG → **Repair or replace, then confirm that there is no misfire (See confirmation driving pattern).**

OK

2	**Check spark plug and spark of misfiring cylinder.**

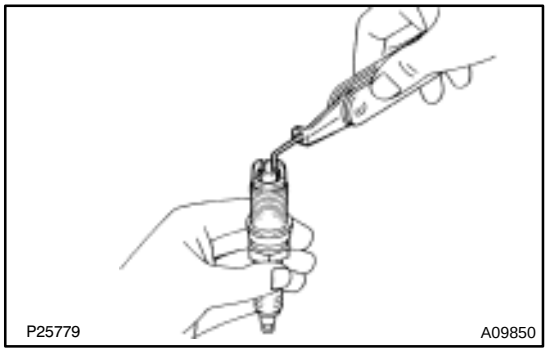

PREPARATION:

(a) Remove the ignition coil and high–tension cord.
(b) Remove the spark plug.

CHECK:

(a) Check the spark plug type.
(b) Check the electrode for carbon deposits.
(c) Check the electrode gap.

OK:

(a) Twin ground electrodes type.
Recommended spark plug:
DENSO made: K16TR11
NGK made: BKR5EKB–11
(b) No large carbon deposit present.
(c) Electrode gap: 1.1 mm (0.043 in.)

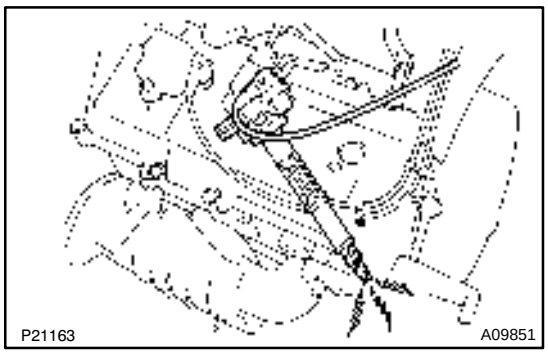

PREPARATION:

(a) Install the spark plug to the ignition coil or high–tension cord.
(b) Disconnect the injector connector.
(c) Ground the spark plug.

CHECK:

Check if spark occurs while the engine is being cranked.

NOTICE:

To prevent excess fuel from being injected from the injectors during this test, don't crank the engine for more than 5 – 10 sec. at a time.

OK:

Spark jumps across electrode gap.

NG	**Replace or check ignition system (See page IG–1).**

OK

3	**Check voltage of ECM terminal for injector of failed cylinder.**

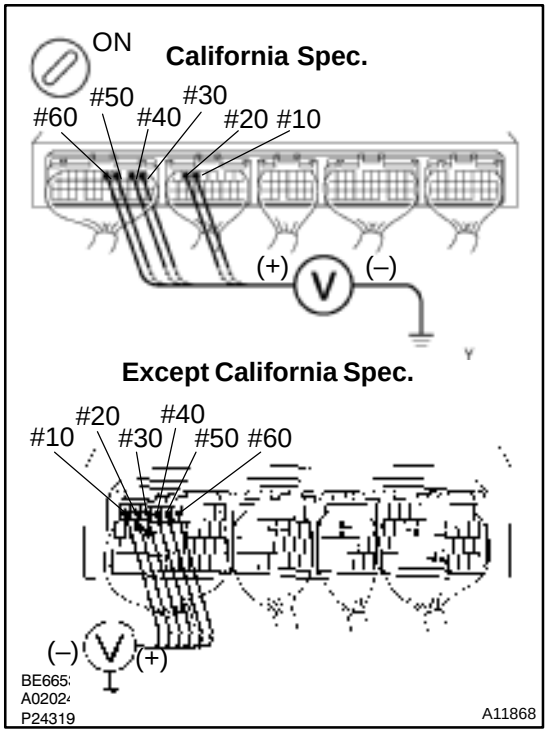

PREPARATION:

(a) Remove the glove compartment (See page SF–56).
(b) Turn the ignition switch ON.

CHECK:

Measure the voltage between applicable terminal of the ECM connector and body ground.

OK:

Voltage: 9 – 14 V

Reference: INSPECTION USING OSCILLOSCOPE

With the engine idling, check the waveform between terminals #10 – #60 and E01 of the ECM connector.
HINT:
The correct waveform is as shown.

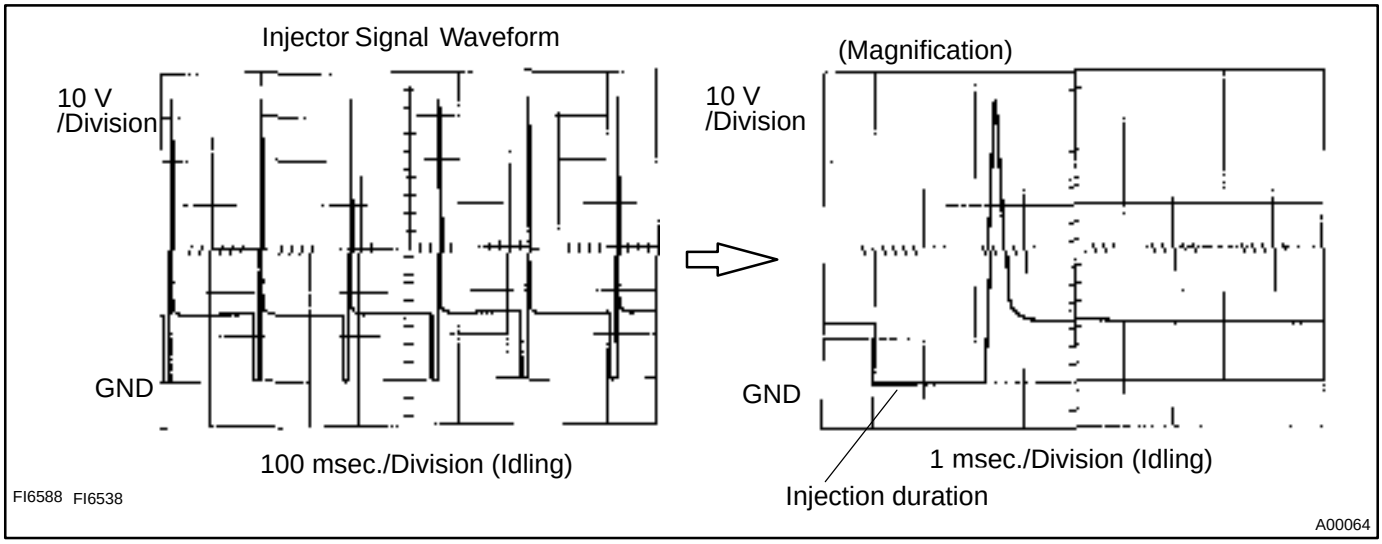

OK → **Go to step 4.**

NG

4	**Check resistance of injector of misfiring cylinder (See page SF–20).**

NG → **Replace injector.**

OK

Check for open and short in harness and connector between injector and ECM (See page IN–28).

5	**Check fuel pressure (See page SF–5).**

NG → **Check and repair fuel pump, pressure regulator, fuel pipe line and filter (See page SF–1).**

OK

6	Check injector injection (See page SF–20).

NG → Replace injector.

OK

7	Check mass air flow meter (See page SF–27) and engine coolant temperature sensor (See page SF–47).

NG → Repair or replace.

OK

Check compression pressure (See page EM–3), valve clearance (See page EM–4) and valve timing (See page EM–19.

DI0S4–09

DTC	P0325	Knock Sensor 1 Circuit Malfunction (Bank 1)

DTC	P0330	Knock Sensor 2 Circuit Malfunction (Bank 2)

CIRCUIT DESCRIPTION

Each knock sensor is fitted to the right bank and left bank of the cylinder block to detect engine knocking. This sensor contains a piezoelectric element which generates a voltage when it becomes deformed, which occurs when the cylinder block vibrates due to knocking. If engine knocking occurs, ignition timing is retarded to suppress it.

DTC No.	DTC Detecting Condition	Trouble Area
P0325	No knock sensor 1 signal to ECM with engine speed between 2,000 rpm and 5,600 rpm	• Open or short in knock sensor 1 circuit • Knock sensor 1 (looseness) • ECM
P0330	No knock sensor 2 signal to ECM with engine speed between 2,000 rpm and 5,600 rpm	• Open or short in knock sensor 2 circuit • Knock sensor 2 (looseness) • ECM

WIRING DIAGRAM

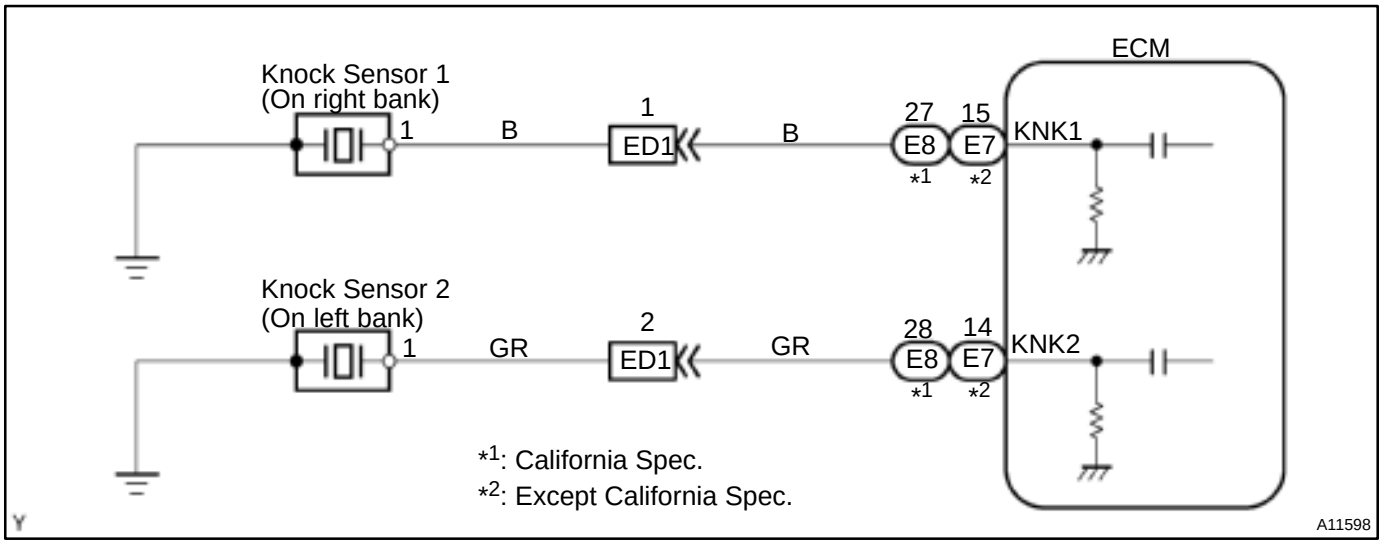

INSPECTION PROCEDURE

HINT:

- DTC P0325 is for the right bank knock sensor circuit.
- DTC P0330 is for the left bank knock sensor circuit.
- Read freeze frame data using TOYOTA hand–held tester or OBD II scan tool. Because freeze frame records the engine conditions when the malfunction is detected. When troubleshooting, it is useful for determining whether the vehicle was running or stopped, the engine was warmed up or not, the air–fuel ratio was lean or rich, etc. at the time of the malfunction.

1	**Connect OBD II scan tool or TOYOTA hand–held tester, and check knock sensor circuit.**

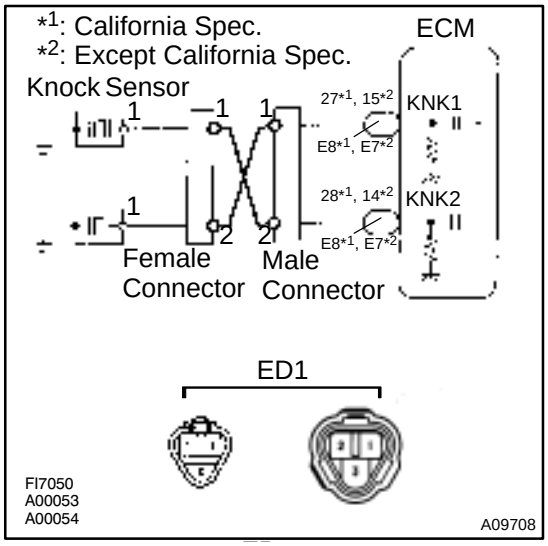

PREPARATION:

(a) Connect the OBD II scan tool or TOYOTA hand–held tester to the DLC3.

(b) Disconnect the wire to wire connector ED1.

(c) Connect the terminals of the disconnected ED1 male connector and ED1 female as follows.

Male connector ↔ Female connector
Terminal 1 ↔ Terminal 2
Terminal 2 ↔ Terminal 1

(d) Turn ignition switch ON and push the OBDII scan tool or TOYOTA hand–held tester main switch ON.

(e) After the engine is warmed up, perform quick racing to 4,000 rpm three times.

CHECK:

Check the DTC.

RESULT:

Type I	DTC same as when vehicle brought in P0325 → P0325 or P0330 → P0330
Type II	DTC different to when vehicle brought in P0325 → P0330 or P0330 → P0325

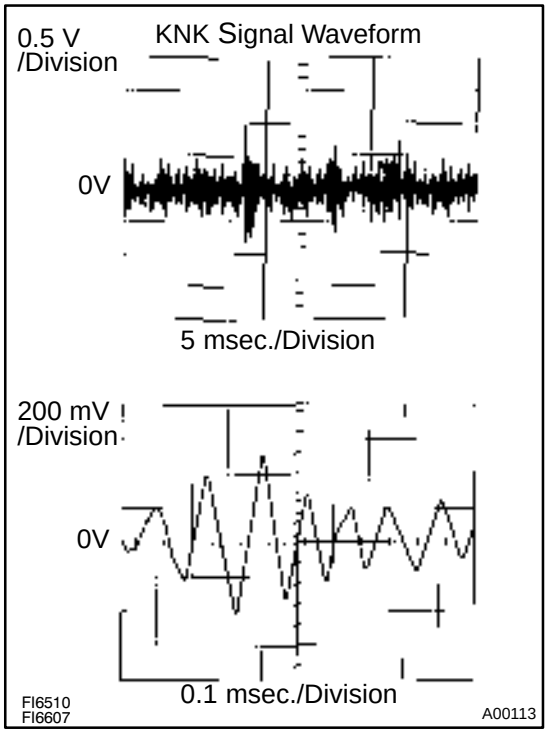

Reference: INSPECTION USING OSCILLOSCOPE

- With the engine racing (4,000 rpm), check the waveform between terminal KNK1, KNK2 of the ECM connector and body ground.

HINT:

The correct waveform is as shown.

- Spread the time on the horizontal axis, and confirm that period of the wave is 0.141 msec. (Normal mode vibration frequency of knock sensor: 7.1 kHz)

HINT:

If normal mode vibration frequency is not 7.1 kHz, the sensor is malfunctioning.

Type II	**Go to step 3.**

Type I

2	**Check for open and short in harness and connector between ED1 connector and ECM (See page IN–28).**

NG → **Repair or replace harness or connector.**

OK

Check and replace ECM (See page IN–28).

3	**Check for open and short in harness and connector between ED1 connector and knock sensor (See page IN–28).**

HINT:

- If DTC P0325 has changed to P0330, check the knock sensor circuit on the right bank side.
- If DTC P0330 has changed to P0325, check the knock sensor circuit on the left bank side.

NG → **Repair or replace harness or connector.**

OK

Replace knock sensor.

DI0S5–09

DTC	P0335	Crankshaft Position Sensor ”A” Circuit Malfunction

CIRCUIT DESCRIPTION

The crankshaft position sensor, which detects the engine speed and crankshaft angle signal (NE signal), has been installed on the oil pump body.
The NE signal plate has 34 teeth. The NE signal sensor generates 34 signals at every engine revolution. The ECM detects the standard crankshaft angle based on the G signal, and the actual crankshaft angle and the engine speed by the NE signal.

DTC No.	DTC Detecting Condition	Trouble Area
P0335	No crankshaft position sensor signal to ECM during cranking (2 trip detection logic)	• Open or short in crankshaft position sensor circuit • Crankshaft position sensor • Crankshaft timing pulley • ECM
	No crankshaft position sensor signal to ECM with engine speed 600 rpm or more (2 trip detection logic)	

WIRING DIAGRAM

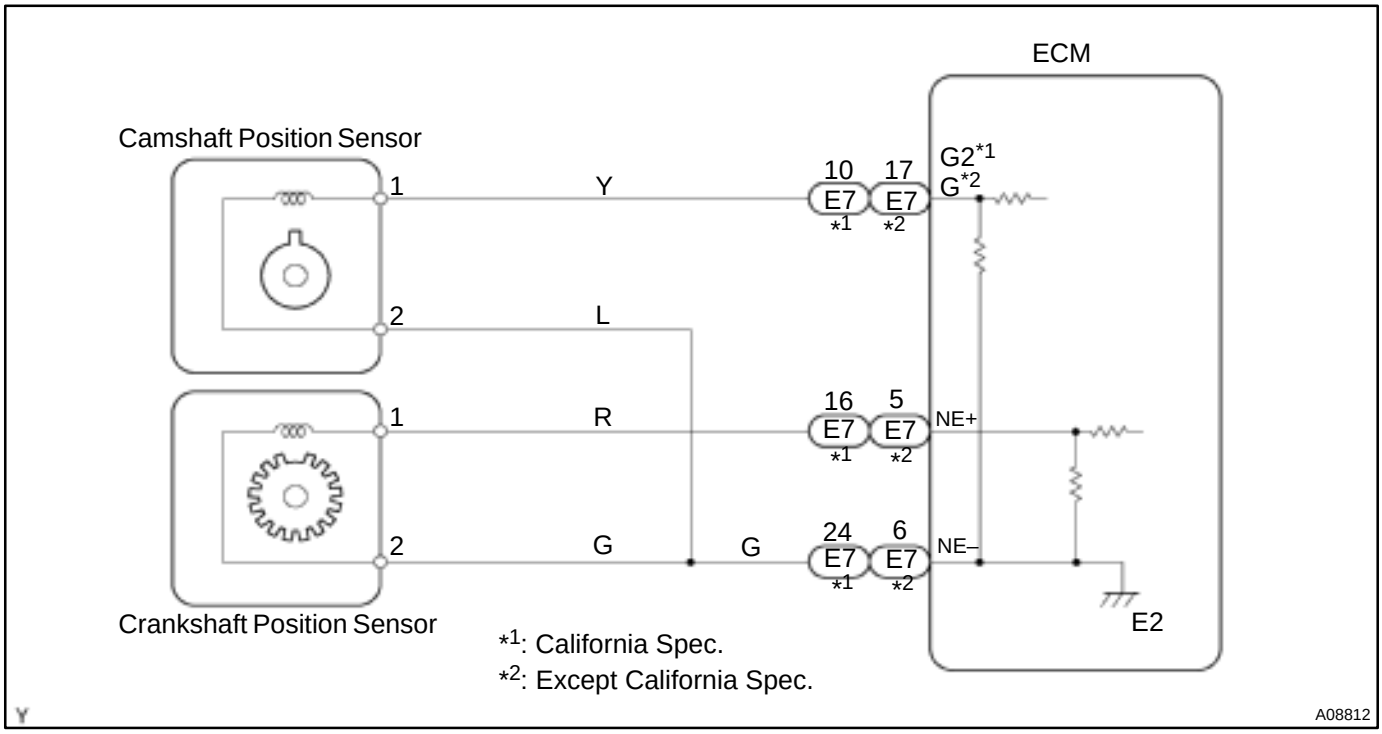

INSPECTION PROCEDURE

HINT:

- Perform troubleshooting of DTC P0335 first. If no trouble is found, troubleshoot the following mechanical systems.
- Read freeze frame data using TOYOTA hand–held tester or OBD II scan tool. Because freeze frame records the engine conditions when the malfunction is detected. When troubleshooting, it is useful for determining whether the vehicle was running or stopped, the engine was warmed up or not, the air–fuel ratio was lean or rich, etc. at the time of the malfunction.

1	**Check resistance of crankshaft position sensor (See page IG–1).**

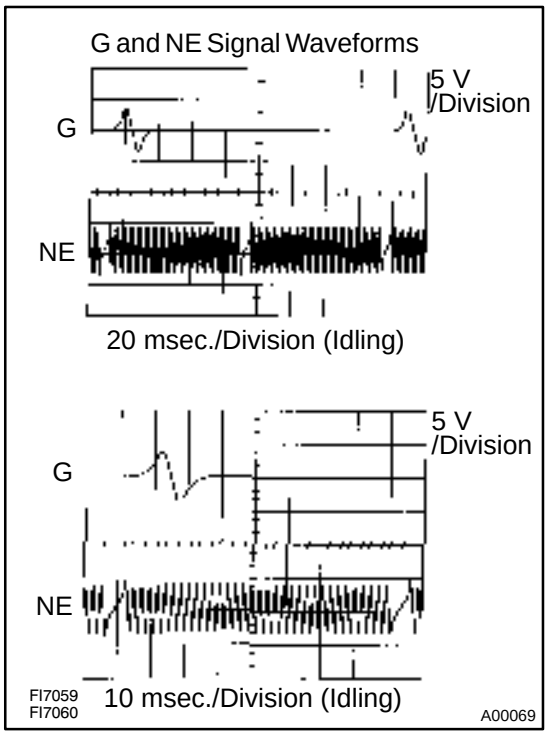

Reference: INSPECTION USING OSCILLOSCOPE
During cranking or idling, check the waveform between terminals G2 (California Spec.) or G+ (Except California Spec.) and NE–, and NE+ and NE– of the ECM connector.
HINT:
The correct waveforms are as shown.

NG → **Replace crankshaft position sensor.**

OK

2	**Check for open and short in harness and connector between ECM and crankshaft position sensor (See page IN–28).**

NG → **Repair or replace harness or connector.**

OK

3	**Inspect sensor installation and teeth of crankshaft timing pulley.**

NG → **Tighten the sensor. Replace crankshaft timing pulley**

OK

Check and replace ECM (See page IN–28).

DTC	P0340	Camshaft Position Sensor Circuit Malfunction

CIRCUIT DESCRIPTION

Camshaft position sensor (G signal) consists of a magnet, iron core and pickup coil.
The G signal plate has 1 tooth, on its outer circumference and is mounted on the RH camshaft timing pulley. When the camshafts rotate, the protrusion on the signal plate and the air gap on the pickup coil change, causing fluctuations in the magnetic field and generating an electromotive force in the pickup coil.
The NE signal plate has 34 teeth and is mounted on the crankshaft timing pulley. The NE signal sensor generates 34 signals at every engine revolution. The ECM detects the standard crankshaft angle based on the G signal and the actual crankshaft angle and the engine speed by the NE signal.

DTC No.	DTC Detecting Condition	Trouble Area
P0340	No camshaft position sensor signal to ECM during cranking (2 trip detection logic)	• Open or short in camshaft position sensor circuit • Camshaft position sensor • RH camshaft timing pulley • ECM
	No camshaft position sensor signal to ECM with engine speed 600 rpm or more	

WIRING DIAGRAM

Refer to DTC P0335 on page DI–263.

INSPECTION PROCEDURE

HINT:
Read freeze frame data using TOYOTA hand–held tester or OBD II scan tool. Because freeze frame records the engine conditions when the malfunction is detected. When troubleshooting, it is useful for determining whether the vehicle was running or stopped, the engine was warmed up or not, the air–fuel ratio was lean or rich, etc. at the time of the malfunction.

1	**Check resistance of camshaft position sensor (See page IG–1).**

Reference: INSPECTION USING OSCILLOSCOPE
Refer to DTC P0335 on page DI–263.

NG → **Replace camshaft position sensor.**

OK

2	**Check for open and short in harness and connector between ECM and camshaft position sensor (See page IN–28).**

NG → **Repair or replace harness or connector.**

OK

3	**Inspect sensor installation and signal plate tooth of RH camshaft timing pulley.**

NG → **Tighten sensor. Replace RH camshaft timing pulley.**

OK

Check and replace ECM (See page IN–28).

DI5C9–04

DTC	P0420	Catalyst System Efficiency Below Threshold (Bank 1) (California Spec.)

CIRCUIT DESCRIPTION

The ECM observes the waveform of the heated oxygen sensor located behind the catalyst to determine whether the catalyst is performance has deteriorated. If the catalyst is functioning normally, the waveform of the heated oxygen sensor located behind the catalyst switches back and forth between rich and lean much more slowly. When the waveform of the heated oxygen sensor located behind the catalyst alternates flatteringly between rich and lean, it indicates that catalyst performance has deteriorated.

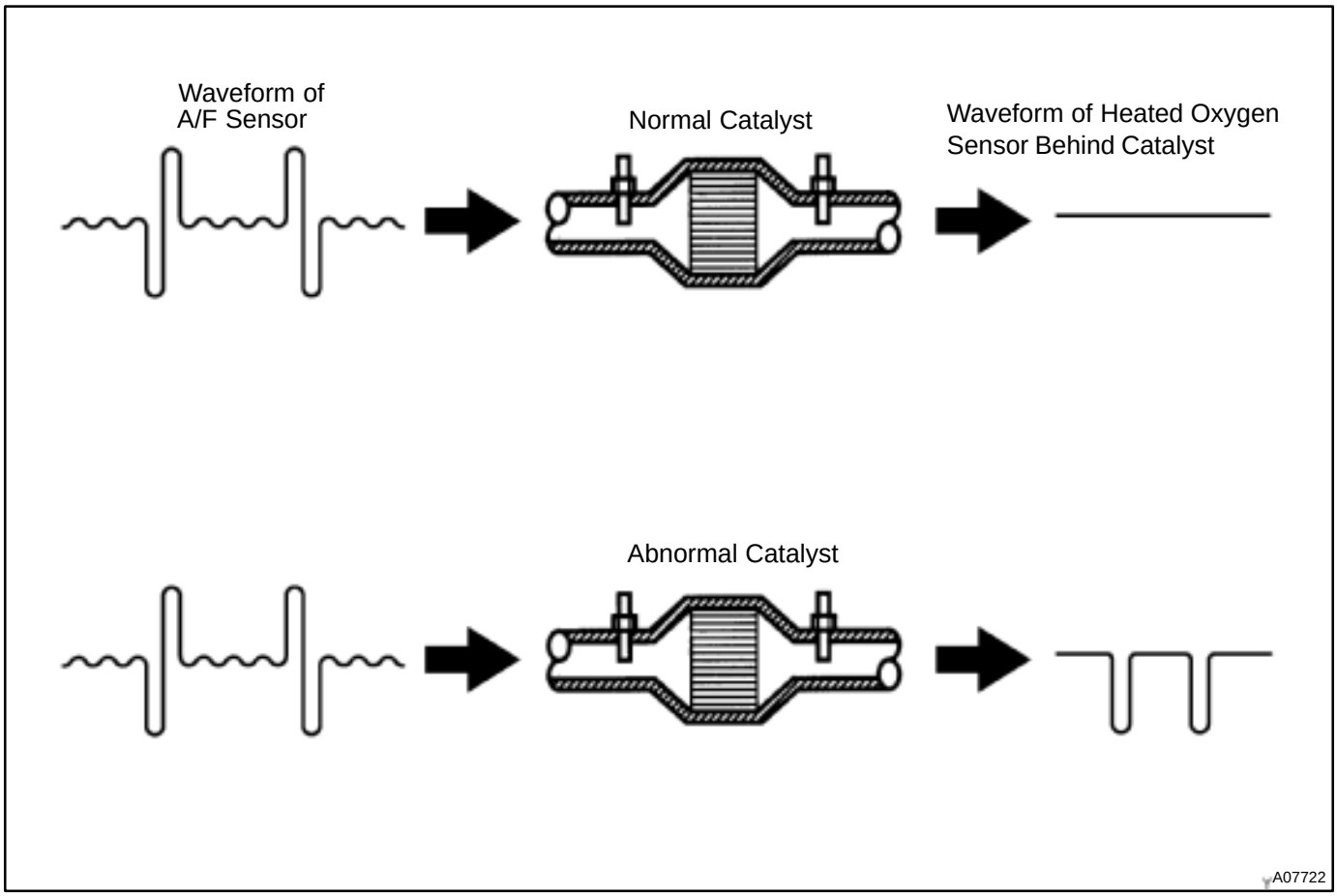

DTC No.	DTC Detecting Condition	Trouble Area
P0420	After engine and catalyst are warmed up, and while vehicle is driven within set vehicle and engine speed range, waveform of heated oxygen sensor (bank 1 sensor 2) alternates flatteringly between rich and lean (2 trip detection logic)	• Gas leakage on exhaust system • A/F sensor (bank 1 sensor 1) • Heated oxygen sensor (bank 1 sensor 2) • Three–way catalytic converter

CONFIRMATION ENGINE RACING PATTERN

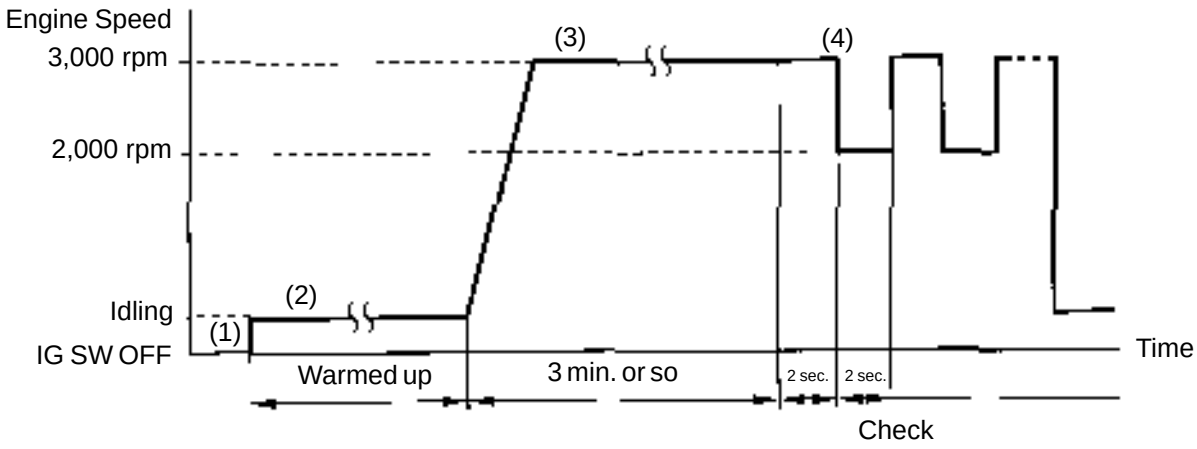

(1) Connect the OBD II scan tool or TOYOTA hand–held tester to the DLC3.
(2) Start the engine and warm it up with all the accessories switched OFF until the water temperature is stable.
(3) Race the engine at 2,500 – 3,000 rpm for about 3 min.
(4) When racing the engine at 3,000 rpm for 2 sec. and 2,000 rpm for 2 sec. alternately, check the waveform of the heated oxygen sensor (bank 1 sensor 2).

INSPECTION PROCEDURE

HINT:
Read freeze frame data using TOYOTA hand–held tester or OBD II scan tool. Because freeze frame records the engine conditions when the malfunction is detected. When troubleshooting, it is useful for determining whether the vehicle was running or stopped, the engine was warmed up or not, the air–fuel ratio was lean or rich, etc. at the time of the malfunction.

1	**Are there any other codes (besides DTC P0420) being output?**

YES → **Go to relevant DTC chart (See page DI–192).**

NO

2	**Check gas leakage on exhaust system.**

NG → **Repair or replace.**

OK

3	**Check A/F sensor (bank 1 sensor 1) (See page SF–53).**

NG → **Repair or replace.**

OK

4	**Check heated oxygen sensor (bank 1 sensor 2) (See page SF–55).**

NG → **Repair or replace.**

OK

Replace three–way catalytic converter.

DTC	P0420	Catalyst System Efficiency Below Threshold (Bank 1) (Except California Spec.)

CIRCUIT DESCRIPTION

The ECM compares the waveform of the oxygen sensor located before the catalyst with the waveform of the oxygen sensor located after the catalyst to determine whether or not catalyst performance has deteriorated.

Air–fuel ratio feedback compensation keeps the waveform of the oxygen sensor before the catalyst repeatedly changing back and forth from rich to lean.

If the catalyst is functioning normally, the waveform of the oxygen sensor after the catalyst switches back and forth between rich and lean much more slowly than the waveform of the oxygen sensor before the catalyst.

But when both waveform change at a similar rate, it indicates that catalyst performance has deteriorated.

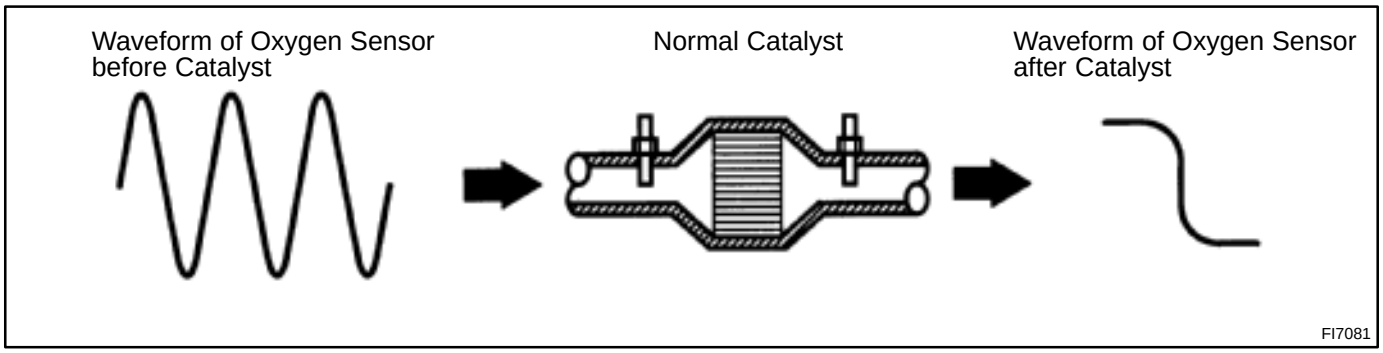

DTC No.	DTC Detecting Condition	Trouble Area
P0420	After engine and catalyst are warmed up, and while vehicle is driven within set vehicle and engine speed range, waveform of heated oxygen sensor have the same amplitude (2 trip detection logic)	• Gas leakage on exhaust system • Heated oxygen sensor • Three–way catalytic converter

CONFIRMATION ENGINE RACING PATTERN

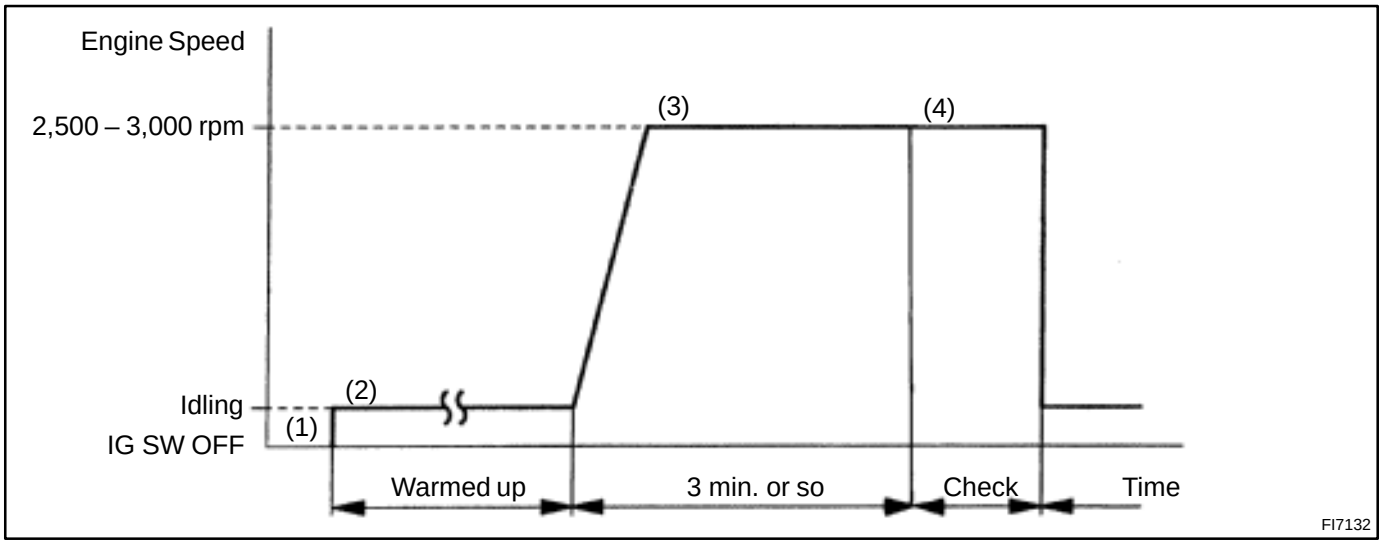

(1) Connect the TOYOTA hand–held tester to the DLC3, or connect the probe of the oscilloscope between terminals OX1, OX2 and E1 of ECM.

(2) Start the engine and warm it up with all accessories switched OFF until engine coolant temperature is stable.
(3) Race the engine at 2,500 – 3,000 rpm for about 3 min.
(4) After confirming that the waveform of the heated oxygen sensor (bank 1 sensor 1 (OX1)), oscillate around 0.5 V during feedback to the ECM, check the waveform of the heated oxygen sensor (bank 1 sensor 2 (OX2)).

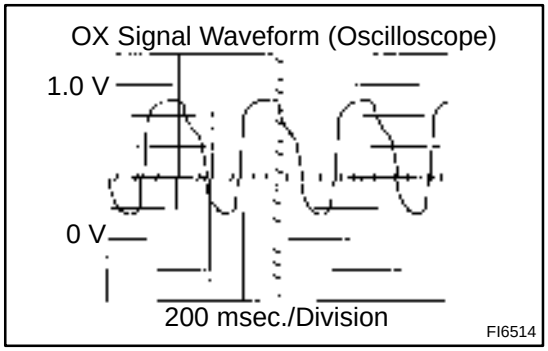

HINT:
If there is a malfunction in the system, the waveform of the heated oxygen sensor (bank 1 sensor 2 (OX2)) is almost the same as that of the heated oxygen sensor (bank 1 sensor 1 (OX1)) on the left.
There are some cases where, even though a malfunction exists, the MIL may either light up or not light up.

INSPECTION PROCEDURE

HINT:
Read freeze frame data using TOYOTA hand–held tester or OBD II scan tool. Because freeze frame records the engine conditions when the malfunction is detected. When troubleshooting, it is useful for determining whether the vehicle was running or stopped, the engine was warmed up or not, the air–fuel ratio was lean or rich, etc. at the time of the malfunction.

1	**Are there any other codes (besides DTC P0420) being output?**

YES → **Go to relevant DTC chart (See page DI–192).**

NO

2	**Check gas leakage on exhaust system.**

NG → **Repair or replace.**

OK

3	**Check heated oxygen sensor (bank 1 sensor 1) (See page DI–238).**

NG → **Repair or replace.**

OK

4	Check heated oxygen sensor (bank 1 sensor 2) (See page DI–243).

NG → Repair or replace.

OK →

Replace three–way catalytic converter.

DI0S8–09

DTC	P0440	Evaporative Emission Control System Malfunction

CIRCUIT DESCRIPTION

The vapor pressure sensor and VSV for vapor pressure sensor are used to detect abnormalities in the evaporative emission control system.
The ECM decides whether there is an abnormality in the evaporative emission control system based on the vapor pressure sensor signal.
DTC P0440 is recorded by the ECM when evaporative emissions leak from the components within the dotted line in Fig. 1 below, or when the vapor pressure sensor malfunctions.

Fig. 1

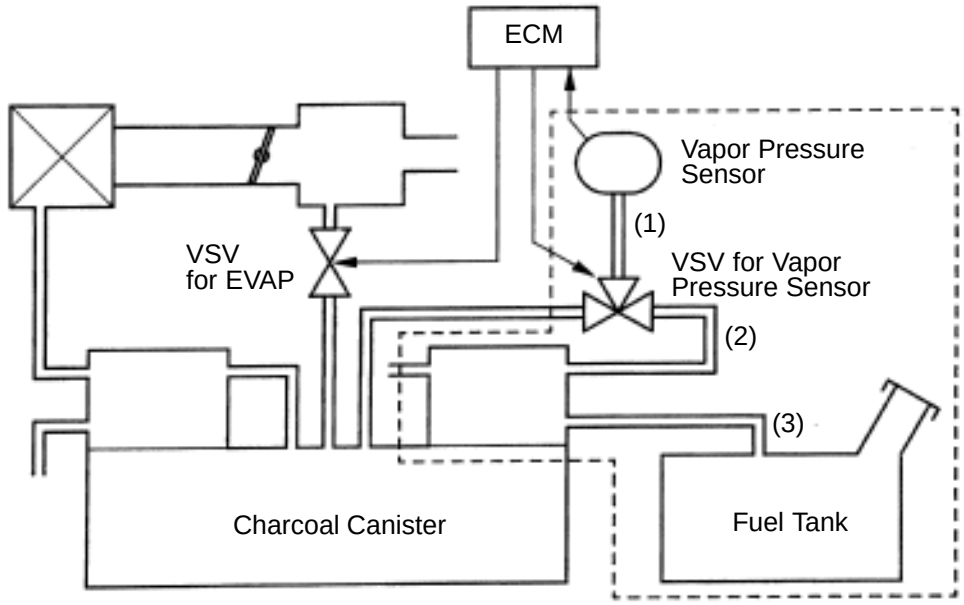

S00043

DTC No.	DTC Detecting Condition	Trouble Area
P0440	Fuel tank pressure is atmospheric pressure after vehicle is driven for 20 min. (2 trip detection logic)	• Hose or tube cracked, holed, damaged or loose seal ((3) in Fig. 1) • Fuel tank cap incorrectly installed • Fuel tank cap cracked or damaged • Vacuum hose cracked, holed, blocked, damaged or disconnected ((1) or (2) in Fig. 1) • Fuel tank cracked, holed or damaged • Charcoal canister cracked, holed or damaged • Open or short in vapor pressure sensor circuit • Vapor pressure sensor • ECM

WIRING DIAGRAM

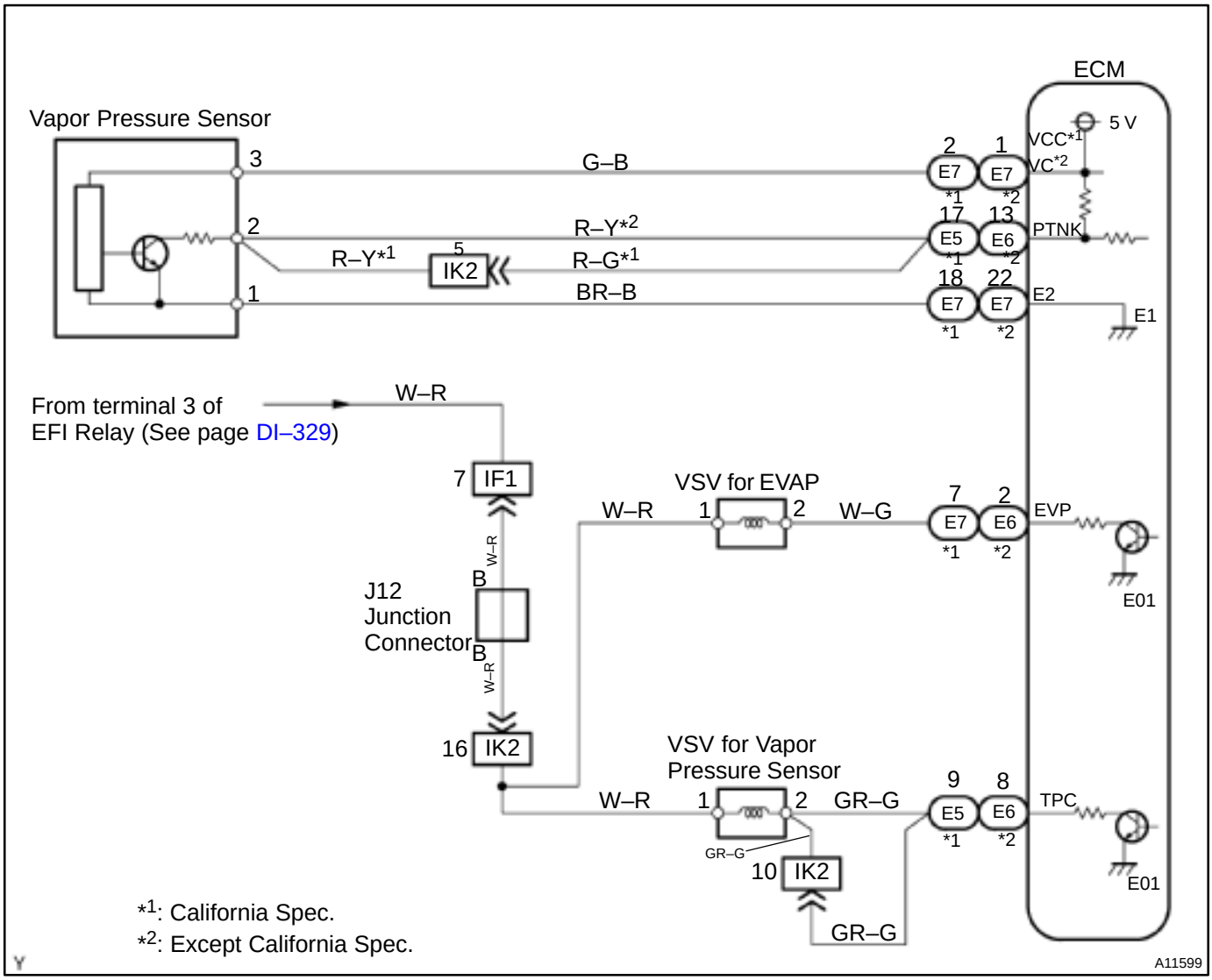

INSPECTION PROCEDURE

- If DTC P0441, P0446, P0450 or P0451 is output after DTC P0440, first troubleshoot DTC P0441, P0446, P0450 or P0451. If no malfunction is detected, troubleshoot DTC P0440 next.
- Ask the customer whether, after the MIL came on, the customer found the fuel tank cap loose and tightened it. Also ask the customer whether the fuel tank cap was loose when refuelling. If the fuel tank cap was not loose, it was the cause of the DTC. If the fuel tank cap was not loose or if the customer was not sure if it was loose, troubleshoot according to the following procedure.
- Read freeze frame data using TOYOTA hand–held tester or OBD II scan tool. Because freeze frame records the engine conditions when the malfunction is detected. When troubleshooting, it is useful for determining whether the vehicle was running or stopped, the engine was warmed up or not, the air–fuel ratio was lean or rich, etc. at the time of the malfunction.
- When the ENGINE RUN TIME in the freeze frame data is less than 200 seconds, carefully check the VSV for EVAP, charcoal canister and vapor pressure sensor.

1	**Check whether hose close to fuel tank have been modified, and check whether there are signs of any accident near fuel tank or charcoal canister.**

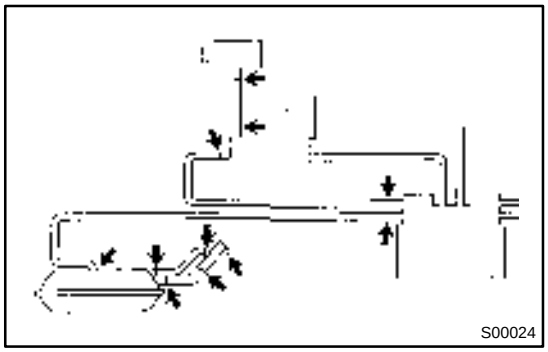

CHECK:

Check for cracks, deformation and loose connection of the following parts:

- Fuel tank
- Charcoal canister
- Fuel tank filler pipe
- Hoses and tubes around fuel tank and charcoal canister

NG → **Repair or replace.**

OK

2	**Check that fuel tank cap is TOYOTA genuine parts.**

NG → **Replace to TOYOTA genuine parts.**

OK

3	**Check that fuel tank cap is correctly installed.**

NG → **Correctly install fuel tank cap.**

OK

4	**Check fuel tank cap (See page EC–5).**

NG → **Replace fuel tank cap.**

OK

5	**Check filler neck for damage.**

PREPARATION:
Remove the fuel tank cap.
CHECK:
Visually inspect the filler neck for damage.

NG → **Replace filler pipe.**

OK

6	**Check vacuum hoses between vapor pressure sensor and VSV for vapor pressure sensor, and VSV for vapor pressure sensor and charcoal canister.**

CHECK:
(a) Check that the vacuum hose is connected correctly.
(b) Check the vacuum hose for looseness and disconnection.
(c) Check the vacuum hose for cracks, hole and damage.

NG → **Repair or replace.**

OK

7	**Check hose and tube between fuel tank and charcoal canister.**

CHECK:
(a) Check for proper connection of the fuel tank and fuel evap pipe (See page EC–5), fuel evap pipe and fuel tube under the floor, fuel tube under the floor and charcoal canister.
(b) Check the hose and tube for cracks, hole and damage.

NG → **Repair or replace.**

OK

8	**Check charcoal canister for cracks, hole and damage (See page EC–5).**

NG → **Replace charcoal canister.**

OK

9	Check voltage between terminals VC and E2 of ECM connector.

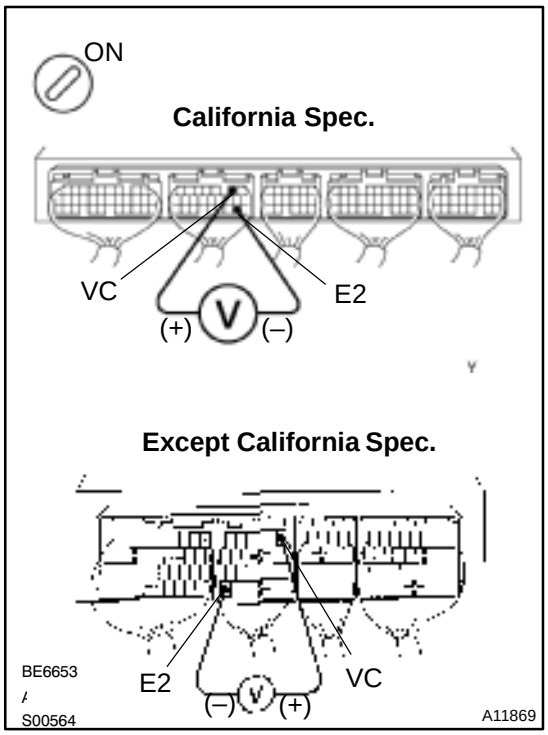

CHECK:

(a) Remove the glove compartment (See page SF–56).

(b) Turn the ignition switch ON.

CHECK:

Measure the voltage between terminals VC and E2 of the ECM connector.

OK:

Voltage: 4.5 – 5.5 V

NG → **Check and replace ECM (See page IN–28).**

OK

10	Check voltage between terminals PTNK and E2 of ECM connector.

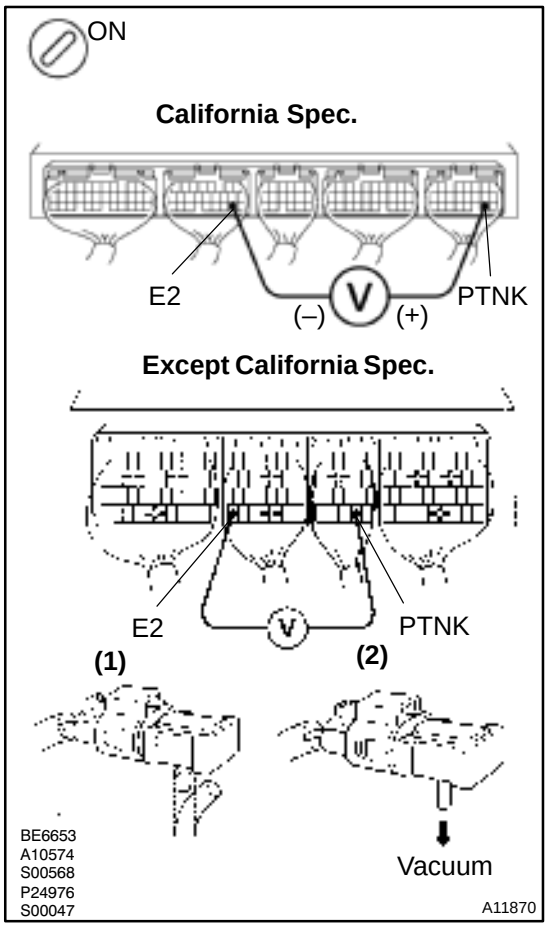

PREPARATION:

(a) Remove the glove compartment (See page SF–56).

(b) Turn the ignition switch ON.

CHECK:

Measure the voltage between terminals PTNK and E2 of the ECM connector.

(1) Disconnect the vacuum hose from the vapor pressure sensor.

(2) Using the MITYVAC (Hand–Held Vacuum Pump), apply a vacuum of 4.0 kPa (30 mmHg, 1.18 in.Hg) to the vapor pressure sensor.

NOTICE:

The vacuum applied to the vapor pressure sensor must be less than 66.7 kPa (500 mmHg, 19.7 in.Hg).

OK:

(1) Voltage: 3.0 – 3.6 V

(2) Voltage: 0.5 V or less

OK	Go to step 12.

NG

11	Check for open and short in harness and connector between vapor pressure sensor and ECM (See page IN–28).

NG	Repair or replace harness or connector.

OK

Replace vapor pressure sensor.

12	Check fuel tank for cracks and damage.

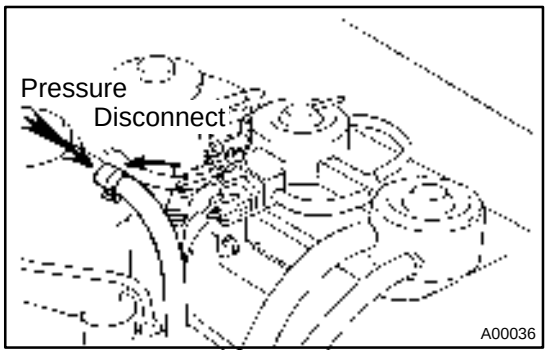

PREPARATION:

(a) Disconnect the vacuum hose from the charcoal canister.
(b) Correctly install the fuel tank cap.
(c) Apply a pressure of 5 kPa (50 gf/cm^2, 0.7 psi) to the fuel tank.

CHECK:

Check whether the pressure is maintained after 1 minute.

OK:

Pressure applied to the fuel tank is maintained.

NG → **Replace fuel tank.**

OK

It is likely that vehicle user did not properly close fuel tank cap. Please explain to customer how to properly install fuel tank cap.

DTC	P0441	Evaporative Emission Control System Incorrect Purge Flow

DTC	P0446	Evaporative Emission Control System Vent Control Malfunction

CIRCUIT DESCRIPTION

The vapor pressure sensor and VSV for vapor pressure sensor are used to detect abnormalities in the evaporative emission control system.

The ECM decides whether there is an abnormality in the evaporative emission control system based on the vapor pressure sensor signal.

DTCs P0441 and P0446 are recorded by the ECM when evaporative emissions leak from the components within the dotted line in Fig. 1 below, or when there is a malfunction in either the VSV for EVAP, the VSV for vapor pressure sensor, or in the vapor pressure sensor itself.

Fig. 1

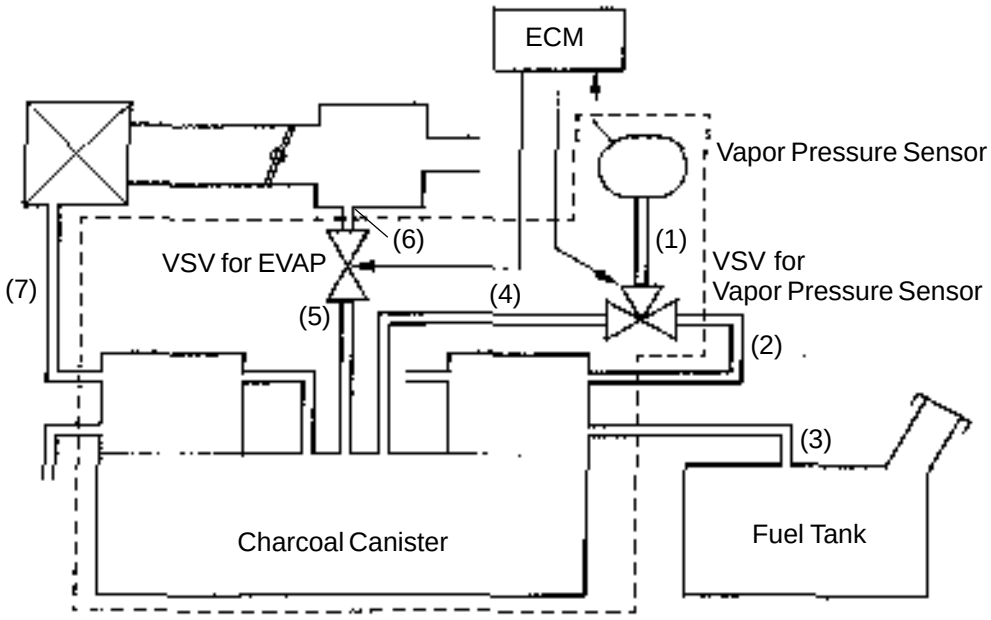

DTC No.	DTC Detecting Condition	Trouble Area
P0441	The pressure in charcoal canister does not drop during purge control (2 trip detection logic)	• Vacuum hose cracked, holed blocked, damaged or disconnected ((1), (4), (5), (6) and (7) in Fig. 1) • Open or short in vapor pressure sensor circuit • Vapor pressure sensor • Open or short in VSV circuit for EVAP • VSV for EVAP • Open or short in VSV circuit for vapor pressure sensor • VSV for vapor pressure sensor • Charcoal canister cracked, holed or damaged • ECM
	During purge cut–off, the pressure in charcoal canister is very low compared with atmospheric pressure (2 trip detection logic)	
P0446	When VSV for vapor pressure sensor is OFF, ECM judges that there is no continuity between vapor pressure sensor and charcoal canister (2 trip detection logic)	
	When VSV for vapor pressure sensor is OFF, ECM judges that there is no continuity between vapor pressure sensor and fuel tank (2 trip detection logic)	
	After the purge cut off operates, pressure in charcoal canister is maintained at atmospheric pressure (2 trip detection logic)	

WIRING DIAGRAM

Refer to DTC P0440 on page DI–273.

INSPECTION PROCEDURE

HINT:

- If DTC P0441, P0446, P0450 or P0451 is output after DTC P0440, first troubleshoot DTC P0441, P0446, P0450 or P0451. If no malfunction is detected, troubleshoot DTC P0440 next.
- Read freeze frame data using TOYOTA hand–held tester or OBD II scan tool. Because freeze frame records the engine conditions when the malfunction is detected. When troubleshooting, it is useful for determining whether the vehicle was running or stopped, the engine was warmed up or not, the air–fuel ratio was lean or rich, etc. at the time of the malfunction.
- When the ENGINE RUN TIME in the freeze frame data is less than 200 seconds, carefully check the VSV for EVAP, charcoal canister and vapor pressure sensor.

TOYOTA hand–held tester:

1	**Check VSV connector for EVAP, VSV connector for vapor pressure sensor and vapor pressure sensor connector for looseness and disconnection.**

NG → **Repair or connect VSV or sensor connector.**

OK

2	**Check vacuum hoses ((1), (4), (5), (6) and (7) in Fig. 1 in circuit description).**

CHECK:

(a) Check that the vacuum hose is connected correctly.
(b) Check the vacuum hose for looseness and disconnection.
(c) Check the vacuum hose for cracks, hole, damage and blockage.

NG → **Repair or replace.**

OK

3	Check voltage between terminals VC and E2 of ECM connector (See page DI–273, step 9).

NG → Check and replace ECM (See page IN–28).

OK

4	Check voltage between terminals PTNK and E2 of ECM connector (See page DI–273, step 10).

OK → Go to step 6.

NG

5	Check for open and short in harness and connector between vapor pressure sensor and ECM (See page IN–28).

NG → Repair or replace harness or connector.

OK

Replace vapor pressure sensor.

6	Check purge flow.

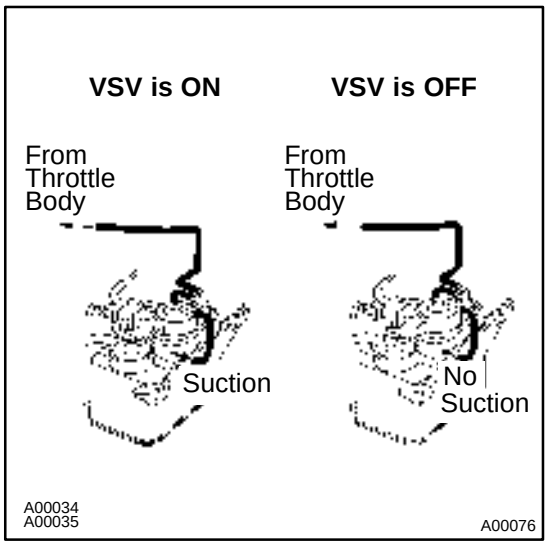

PREPARATION:

(a) Connect the TOYOTA hand–held tester to the DLC3.
(b) Select the ACTIVE TEST mode on the TOYOTA hand–held tester.
(c) Disconnect the vacuum hose of the VSV for the EVAP from the charcoal canister.
(d) Start the engine.

CHECK:

When the VSV for EVAP is operated by the TOYOTA hand–held tester, check whether the disconnected hose applies suction to your finger.

OK:

VSV is ON:
Disconnected hose applies suction to your finger.
VSV is OFF:
Disconnected hose applies no suction to your finger.

OK	Go to step 10.

NG

7	Check vacuum hoses between throttle body and VSV for EVAP, and VSV for EVAP and charcoal canister.

CHECK:

(a) Check that the vacuum hose is connected correctly.
(b) Check the vacuum hose for looseness and disconnection.
(c) Check the vacuum hose for cracks, hole, damage and blockage.

NG	Repair or replace.

OK

8	Check operation of VSV for EVAP (See page SF–44).

OK	Go to step 9.

NG

Replace VSV and charcoal canister, and then clean the vacuum hoses between throttle body and VSV for EVAP, and VSV for EVAP and charcoal canister.

9	**Check for open and short in harness and connector between EFI main relay (Marking: EFI) and VSV for EVAP, and VSV for EVAP and ECM (See page IN–28).**

NG → **Repair or replace harness or connector.**

OK

Check and replace ECM (See page IN–28).

10	**Check VSV for vapor pressure sensor.**

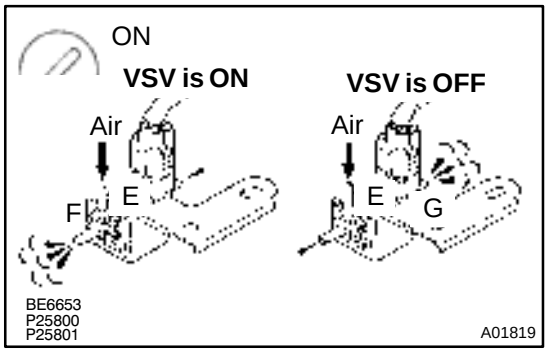

PREPARATION:

(a) Connect the TOYOTA hand–held tester to the DLC3.
(b) Turn the ignition switch ON and push the OBD II scan tool or TOYOTA hand–held tester main switch ON.
(c) Select the ACTIVE TEST mode on the TOYOTA hand–held tester.

CHECK:

Check the VSV operation when it is operated by the TOYOTA hand–held tester.

OK:

VSV is ON:
Air from port E is flows out through port F.
VSV is OFF:
Air from port E is flows out through port G.

OK → **Go to step 13.**

NG

11	**Check operation of VSV for vapor pressure sensor (See page SF–45).**

OK → **Go to step 12.**

NG

Replace VSV and charcoal canister, and then clean vacuum hoses between charcoal canister and VSV for vapor pressure sensor, and VSV for vapor pressure sensor and vapor pressure sensor.

12	Check for open and short in harness and connector between EFI main relay (Marking: EFI) and VSV for vapor pressure sensor, and VSV for vapor presuure sensor and ECM (See page IN–28).

NG → Repair or replace harness or connector.

OK

Check and replace ECM (See page IN–28).

13	When VSV connector for vapor pressure sensor is disconnected and VSV for EVAP is ON, measure voltage between terminals PTNK and E2 of ECM connector.

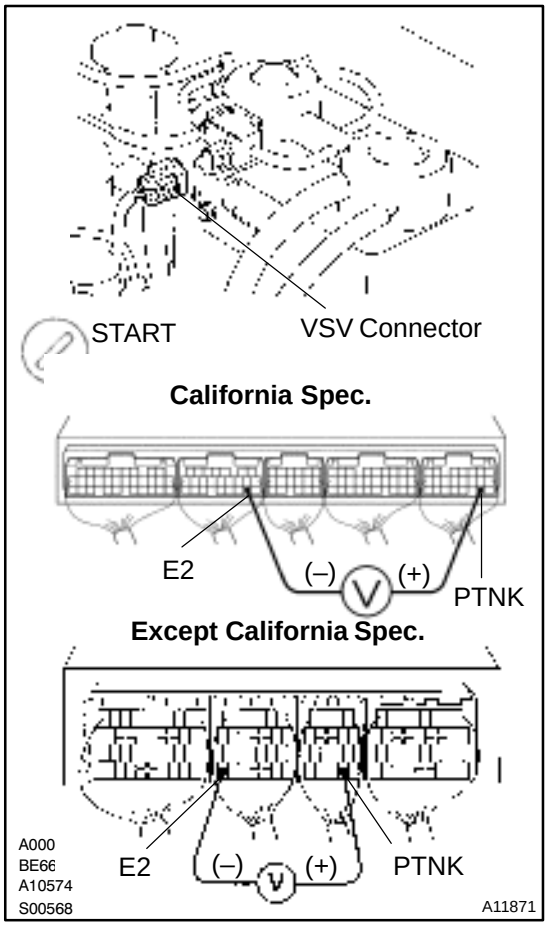

PREPARATION:

(a) Connect the TOYOTA hand–held tester to the DLC3.
(b) Disconnect the VSV connector for the vapor pressure sensor.
(c) Select the ACTIVE TEST mode on the TOYOTA hand–held tester.
(d) Start the engine.

CHECK:

Measure the voltage between terminals PTNK and E2 of the ECM connector using the TOYOTA hand–held tester when the VSV for the EVAP is ON.

OK:

Voltage: 2.0 V or less

OK	Go to step 15.

NG

14	Check vacuum hoses between charcoal canister and VSV for vapor pressure sensor, and vapor pressure sensor and VSV for vapor pressure sensor.

CHECK:

(a) Check that the vacuum hose is connected correctly.
(b) Check the vacuum hose for looseness and disconnection.
(c) Check the vacuum hose for cracks, hole, damage and blockage.

NG	Repair or replace.

OK

15	Check charcoal canister.

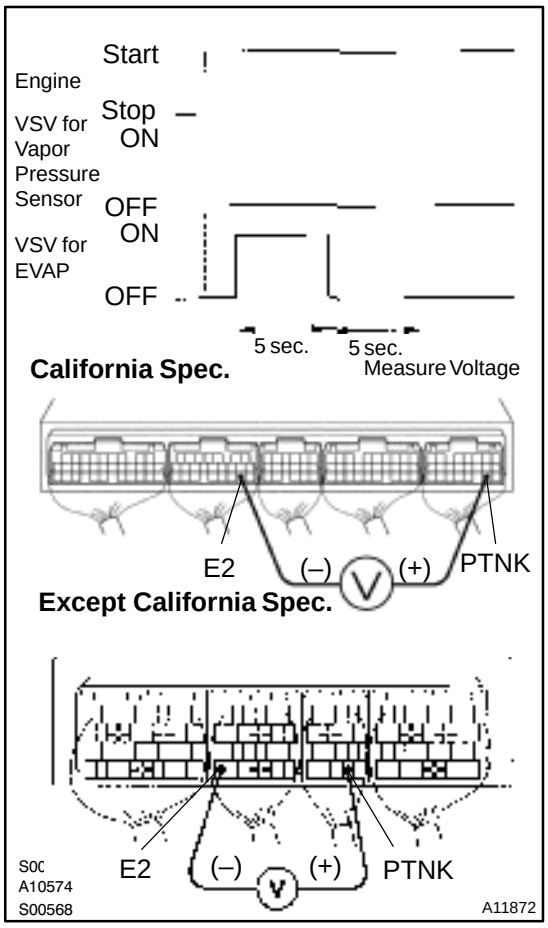

PREPARATION:

(a) Connect the TOYOTA hand–held tester to the DLC3.
(b) Remove the fuel tank cap.
(c) Disconnect the VSV connector for the vapor pressure sensor.
(d) Select the ACTIVE TEST mode on the TOYOTA hand–held tester.
(e) Start the engine.
(f) The VSV for the EVAP is ON by the TOYOTA hand–held tester and remains on for 5 sec.

CHECK:

Measure the voltage between terminals PTNK and E2 of the ECM connector 5 sec. after switching the VSV for the EVAP from ON to OFF.

OK:

Voltage: 2.5 V or less

NG	Replace charcoal canister.

OK

16	Remove charcoal canister and check it (See page EC–5).

NG	Replace charcoal canister.

OK

Check and replace ECM (See page IN–28).

OBD II scan tool (excluding TOYOTA hand–held tester):

1	Check VSV connector for EVAP, VSV connector for vapor pressure sensor and vapor pressure sensor connector for looseness and disconnection.

NG → Repair or connect the VSV or sensor connector.

OK

2	Check vacuum hoses ((1), (4), (5), (6) and (7) in Fig. 1 in circuit description).

CHECK:

(a) Check that the vacuum hose is connected correctly.
(b) Check the vacuum hose for looseness and disconnection.
(c) Check the vacuum hose for cracks, hole, damage and blockage.

NG → Repair or replace.

OK

3	Check voltage between terminals VC and E2 of ECM connector (See page DI–273, step 9).

NG → Check and replace ECM (See page IN–28).

OK

4	Check voltage between terminals PTNK and E2 of ECM connector (See page DI–273, step 10).

OK → Go to step 6.

NG

5	Check for open and short in harness and connector between vapor pressure sensor and ECM (See page IN–28).

NG → Repair or replace harness or connector.

OK

Replace vapor pressure sensor.

6	Check VSV for EVAP.

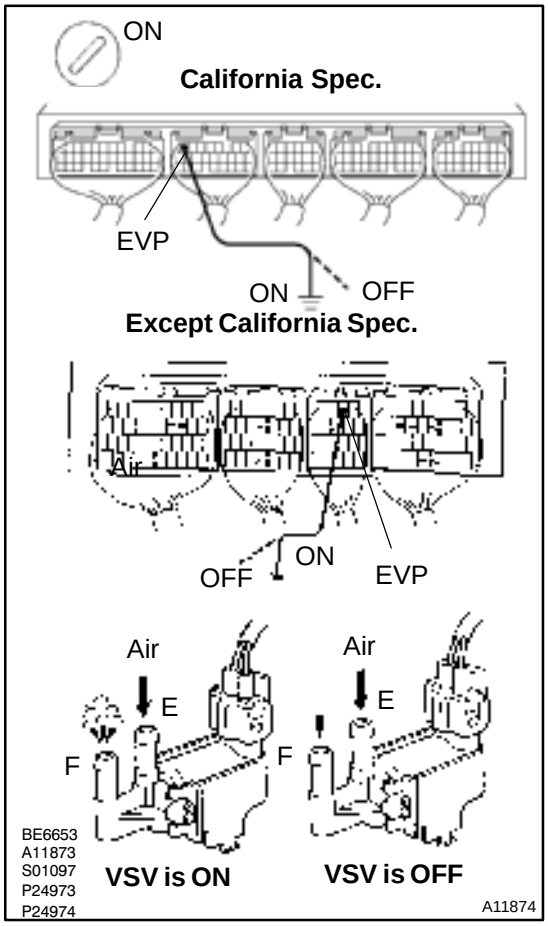

PREPARATION:

(a) Remove the glove compartment (See page SF–56).

(b) Turn the ignition switch ON.

CHECK:

Check the VSV function.

(1) Connect between terminal EVP of the ECM connector and body ground (ON).

(2) Disconnect between terminal EVP of the ECM connector and body ground (OFF).

OK:

(1) VSV is ON:
Air from port E is flowing out through port F.
(2) VSV is OFF:
Air does not flow from port E to port F.

OK	Go to step 9.

NG

7	Check operation of VSV for EVAP (See page SF–44).

OK	Go to step 8.

NG

Replace VSV and charcoal canister, and then clean the vacuum hoses between throttle body and VSV for EVAP, and VSV for EVAP and charcoal canister.

8	**Check for open and short in harness and connector between EFI main relay (Marking: EFI) and VSV for EVAP, and VSV for EVAP and ECM (See page IN–28).**

NG → **Repair or replace harness or connector.**

OK

Check and replace ECM (See page IN–28).

9	**Check VSV for vapor pressure sensor.**

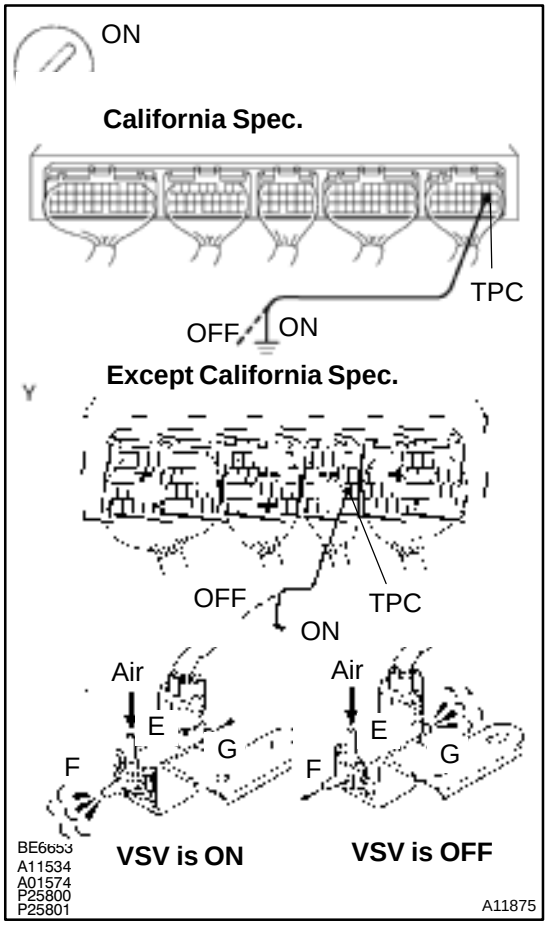

PREPARATION:

(a) Remove the glove compartment (See page SF–56).

(b) Turn the ignition switch ON.

CHECK:

Check the VSV function.

(1) Connect between terminal TPC of the ECM connector and body ground (ON).

(2) Disconnect between terminal TPC of the ECM connector and body ground (OFF).

OK:

(1) VSV is ON:
Air from port E is flows out through port F.
(2) VSV is OFF:
Air from port E is flows out through port G.

OK → **Check and replace charcoal canister (See page EC–5).**

NG

10	**Check operation of VSV for vapor pressure sensor (See page SF–45).**

OK → Go to step 11.

NG

Replace VSV and charcoal canister, and then clean vacuum hoses between charcoal canister and VSV for vapor pressure sensor, and VSV for vapor pressure sensor and vapor pressure sensor.

11	Check for open and short in harness and connector between EFI main relay (Marking: EFI) and VSV for vapor pressure sensor, VSV for vapor pressure sensor and ECM (See page IN–28).

NG → Repair or replace harness or connector.

OK

Check and replace ECM (See page IN–28).

DTC	P0450	Evaporative Emission Control System Pressure Sensor Malfunction

DTC	P0451	Evaporative Emission Control System Pressure Sensor Range/Performance

CIRCUIT DESCRIPTION

The vapor pressure sensor and VSV for vapor pressure sensor are used to detect abnormalities in the evaporative emission control system.

The ECM decides whether there is an abnormality in the evaporative emission control system based on the vapor pressure sensor signal.

DTC P0450 or P0451 is recorded by the ECM when the vapor pressure sensor malfunction.

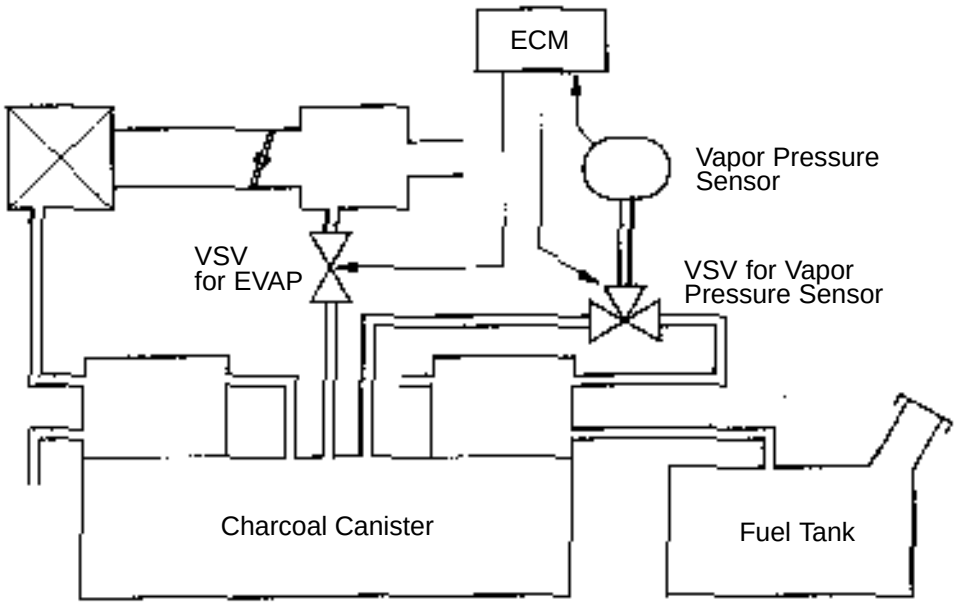

DTC No.	DTC Detecting Condition	Trouble Area
P0450	10 seconds or more after engine starting condition (a) or (b) continues for 7 seconds or more: (2 trip detection logic) (a) Vapor pressure sensor value < –3.5 kPa (–26 mmHg, –1.0 in.Hg) (b) Vapor pressure sensor value ≧ 1.5 kPa (11 mmHg, 0.4 in.Hg)	• Open or short in vapor pressure sensor circuit • Vapor pressure sensor • ECM
P0451	Vapor pressure sensor output extremely changes under conditions of (a), (b) and (c): (2 trip detection logic) (a) Vehicle speed: 0 km/h (0mph) (b) Engine speed: Idling (c) VSV for vapor pressure sensor is ON	

WIRING DIAGRAM

Refer to DTC P0440 on page DI–273.

INSPECTION PROCEDURE

HINT:

- If DTC P0441, P0446, P0450 or P0451 is output after DTC P0440, first trouble shoot DTC P0441, P0446 P0450 or P0451. If no malfunction is detected, troubleshoot DTC P0440 next.
- Read freeze frame data using TOYOTA hand–held tester or OBD II scan tool. Because freeze frame records the engine conditions when the malfunction is detected. When troubleshooting, it is useful for determining whether the vehicle was running or stopped, the engine was warmed up or not, the air–fuel ratio was lean or rich, etc. at the time of the malfunction.
- When the ENGINE RUN TIME in the freeze frame data is less than 200 seconds, carefully check the VSV for EVAP, charcoal canister and vapor pressure sensor.

1	**Check voltage between terminals VC and E2 of ECM connector (See page DI–273, step 9).**

NG → **Check and replace ECM (See page IN–28).**

OK

2	**Check voltage between terminals PTNK and E2 of ECM connector (See page DI–273, step 10).**

OK → **Check and replace ECM (See page IN–28).**

NG

3	**Check for open and short in harness and connector between the vapor pressure sensor and ECM (See page IN–28).**

NG → **Repair or replace harness or connector.**

OK

Replace vapor pressure sensor.

DI0SB–08

DTC	P0500	Vehicle Speed Sensor Malfunction

CIRCUIT DESCRIPTION

The speed sensor for ABS detects the wheel speed and sends the appropriate signals to the ABS ECU. The ECU converts these signals into a 4–pulse signal and outputs it to the combination meter.
After this signal is converted into a more precise rectangular waveform by the waveform shaping circuit inside the combination meter, it is then transmitted to the ECM. The ECM determines the vehicle speed based on the frequency of these pulse signals.

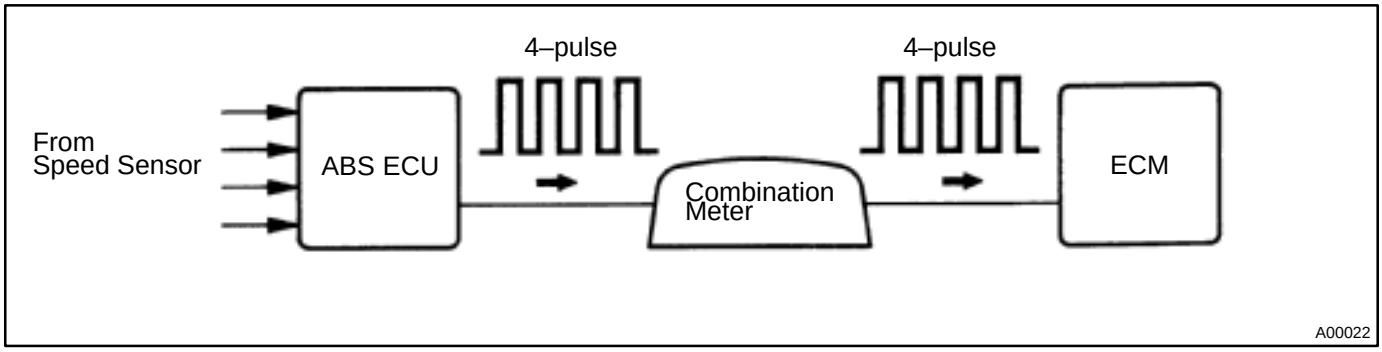

DTC No.	DTC Detecting Condition	Trouble Area
P0500	No speed sensor signal to ECM under following conditions: (2 trip detection logic) For A/T: (a) Park/neutral position switch is OFF (b) Vehicle is being driven For M/T: (a) Engine speed is between 1,800 rpm and 3,500 rpm	• Open or short in speed signal circuit • Combination meter • ECM • Open or short in speed sensor circuit for ABS • ABS ECU

WIRING DIAGRAM

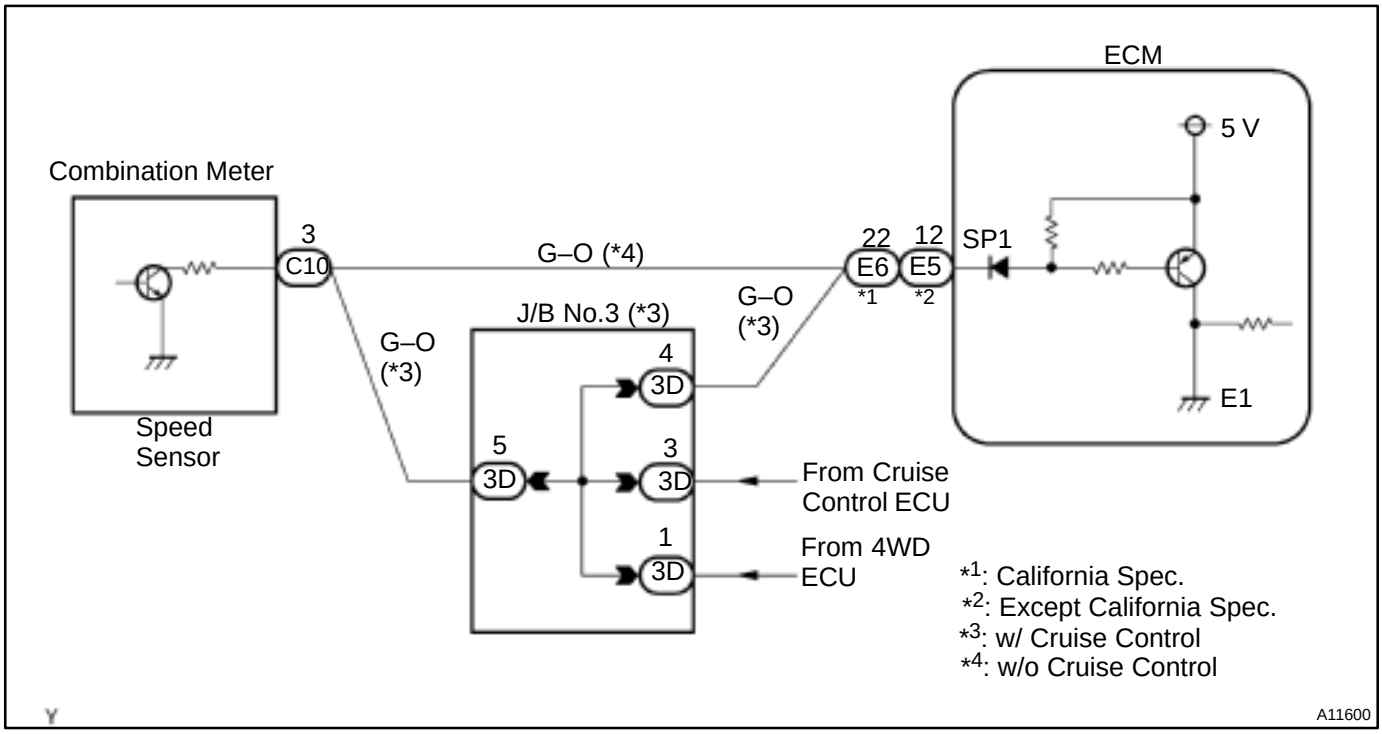

INSPECTION PROCEDURE

HINT:

Read freeze frame data using TOYOTA hand–held tester or OBD II scan tool. Because freeze frame records the engine conditions when the malfunction is detected. When troubleshooting, it is useful for determining whether the vehicle was running or stopped, the engine was warmed up or not, the air–fuel ratio was lean or rich, etc. at the time of the malfunction.

1	**Check operation of speedometer.**

CHECK:

Drive the vehicle and check if the operation of the speedometer in the combination meter is normal.

HINT:

The vehicle speed is operating normally if the speedometer display is normal.

NG → **Check speedometer circuit (See page BE–38).**

OK

2	**Check voltage between terminal SP1 of ECM connector and body ground.**

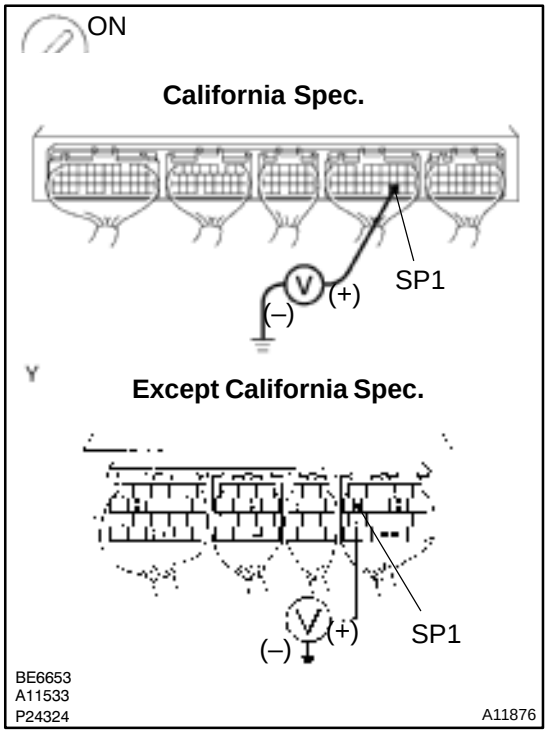

PREPARATION:

(a) Remove the glove compartment (See page SF–56).
(b) Disconnect the cruise control ECU connector.
(c) Shift the shift lever to the neutral.
(d) Jack up the rear wheel on one side.
(e) Turn the ignition switch ON.

CHECK:

Measure the voltage between terminal SP1 of the ECM connector and body ground when the wheel is turned slowly.

OK:

Voltage is generated intermittently.

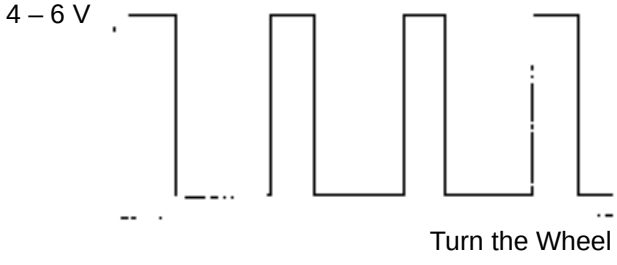

OK → **Check and replace ECM (See page IN–28).**

NG

3	**Check for open or short in harness and connector between combination meter and ECM (See page IN–28).**

OK → **Check and replace ECM (See page IN–28).**

NG

Repair or replace harness or connector.

DI0SC–09

DTC	P0505	Idle Control System Malfunction

CIRCUIT DESCRIPTION

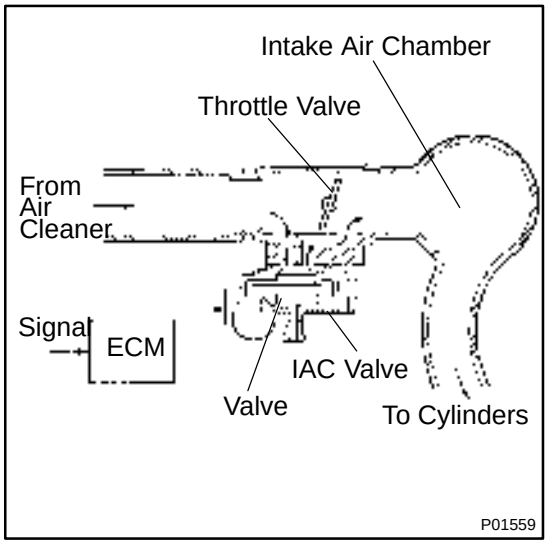

The rotary solenoid type IAC valve is located in front of the intake air chamber and intake air bypassing the throttle valve is directed to the IAC valve through a passage.
In this way the intake air volume bypassing the throttle valve is regulated, controlling the engine speed.
The ECM operates only the IAC valve to perform idle–up and provide feedback for the target idling speed.

DTC No.	DTC Detecting Condition	Trouble Area
P0505	Idle speed continues to vary greatly from target speed (2 trip detection logic)	• Open or short in IAC valve circuit • IAC valve is stuck or closed • Open or short in A/C signal circuit • Air induction system • ECM

WIRING DIAGRAM

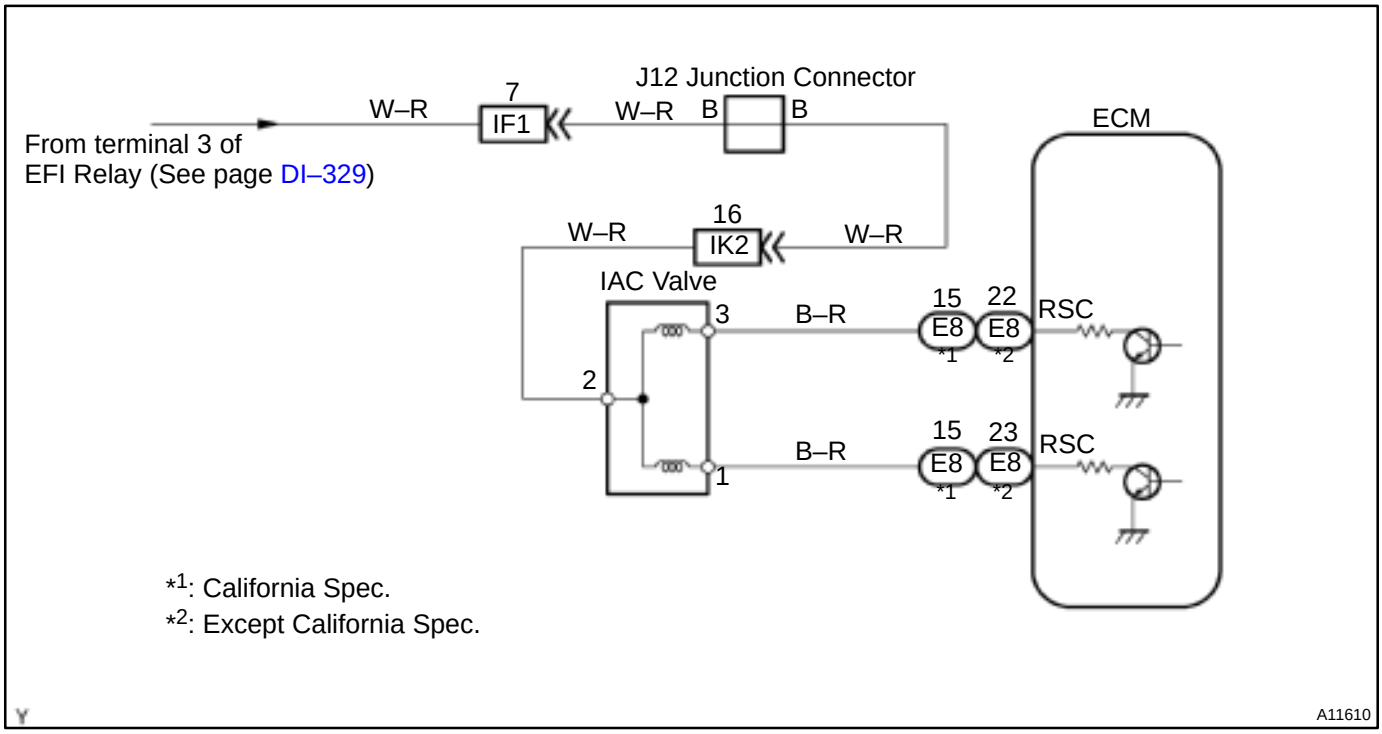

INSPECTION PROCEDURE

HINT:

Read freeze frame data using TOYOTA hand–held tester or OBD II scan tool. Because freeze frame records the engine conditions when the malfunction is detected. When troubleshooting, it is useful for determining whether the vehicle was running or stopped, the engine was warmed up or not, the air–fuel ratio was lean or rich, etc. at the time of the malfunction.

1	**Check engine idle speed.**

PREPARATION:

(a) Warm up the engine to normal operating temperature.
(b) Switch off all the accessories.
(c) Switch off the A/C.
(d) Shift the transmission into the N or neutral position.
(e) Connect the OBD II scan tool or TOYOTA hand–held tester to the DLC3 on the vehicle.
(f) Using SST, connect terminals TE1 and E1 of the DLC1.
SST 09843–18020

CHECK:

Check the difference of engine speed between the ones, less than 5 sec. and more than 5 sec. after connecting terminals TE1 and E1 of the DLC1.

OK:

Difference of engine speed: More than 100 rpm

NG → **Go to step 6.**

OK

2	Check voltage terminals RSO, RSC of ECM connector and body ground.

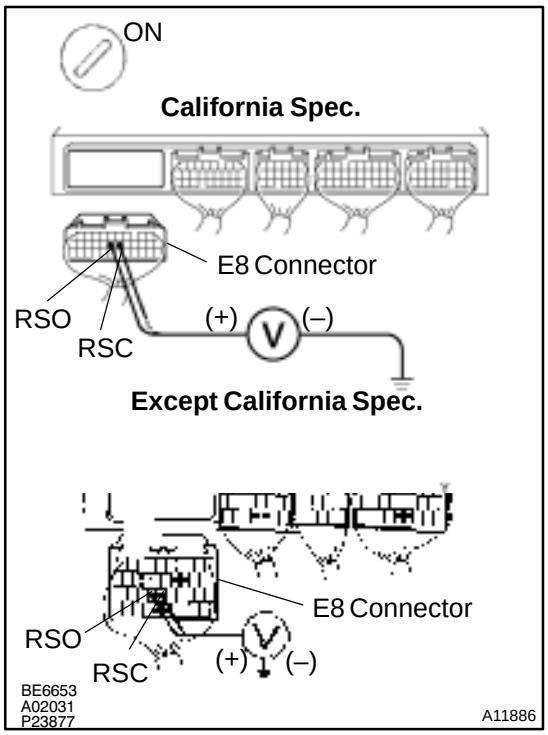

PREPARATION:

(a) Remove the glove compartment (See page SF–56).
(b) Disconnect the E8 connector from the ECM.
(c) Turn the ignition switch ON.

CHECK:

Measure the voltage between terminals RSO, RSC of the ECM connector and body ground.

OK:

Voltage: 9 – 14 V

OK → **Go to step 4.**

NG

3	Check IAC valve (See page SF–35).

NG → **Replace IAC valve.**

OK

Check for open and short in harness and connector between R/B No.2 and IAC valve, and IAC valve and ECM (See page IN–28).

4	Check operation of IAC valve (See page SF–39).

NG → **Repair or replace IAC valve.**

OK

5	Check operation of IAC valve and passage to bypass throttle valve.

NG → Repair or replace IAC valve.

OK →

Check and replace ECM (See page IN–28).

6	Check A/C signal circuit (See page AC–80).

NG → Repair or replace.

OK →

Check air induction system
(See page SF–1).

DI0SI–09

Starter Signal Circuit

CIRCUIT DESCRIPTION

When the engine is cranked, the intake air flow is slow, so fuel vaporization is poor. A rich mixture is therefore necessary in order to achieve good startability. While the engine is being cranked, the battery positive voltage is applied to terminal STA of the ECM. The starter signal is mainly used to increase the fuel injection volume for the starting injection control and after–starter injection control.

WIRING DIAGRAM

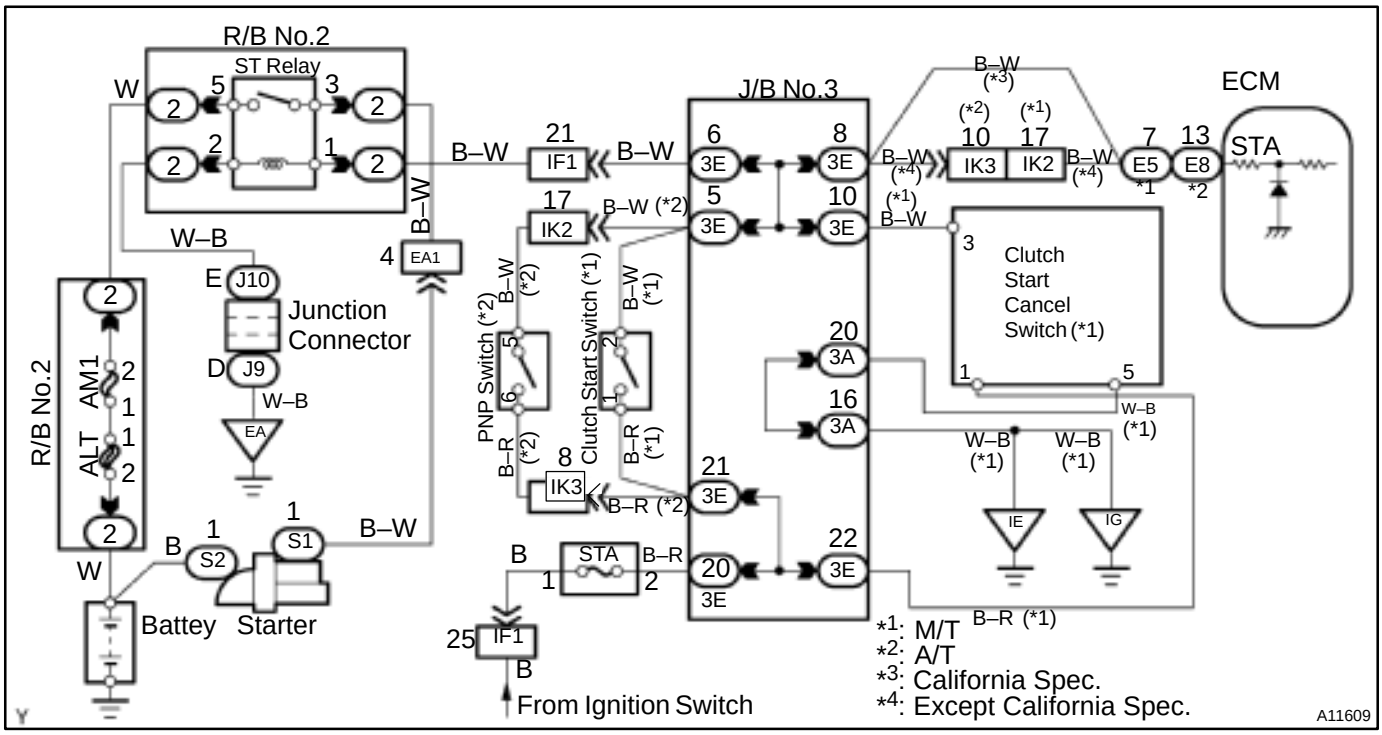

INSPECTION PROCEDURE

HINT:

This diagnostic chart is based on the premise that the engine is cranked normally. If the engine is not cranked, proceed to the problem symptoms table on page DI–202.

TOYOTA hand–held tester:

1	**Check STA signal.**

PREPARATION:

(a) Connect the TOYOTA hand–held tester to the DLC3.

(b) Turn the ignition switch ON and push the TOYOTA hand–held tester main switch ON.

CHECK:

Read the STA signal on the TOYOTA hand–held tester while the starter operates.

OK:

Ignition Switch Position	ON	START
STA signal	OFF	ON

OK	Proceed to next circuit inspection shown on problem symptoms table (See page DI–202).

NG

2	Check for open in harness and connector between ECM and starter relay (Marking: ST) (See page IN–28).

NG	Repair or replace harness or connector.

OK

Check and replace ECM (See page IN–28).

OBD II scan tool (excluding TOYOTA hand–held tester):

1	Check voltage between terminal STA of ECM connector and body ground.

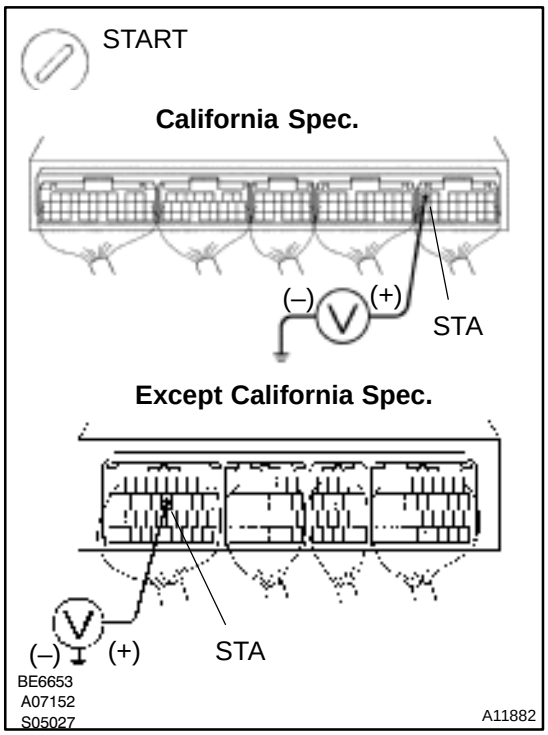

PREPARATION:
Remove the glove compartment (See page SF–56).
CHECK:
Measure the voltage between terminal STA of the ECM connector and body ground, during the engine cranking.
OK:
Voltage: 6 V or more

OK	Proceed to next circuit inspection shown on problem symptoms table (See page DI–202).

NG

2	**Check for open in harness and connector between ECM and starter relay (Marking: ST) (See page DI–198).**

NG → **Repair or replace harness or connector.**

OK

Check and replace ECM (See page IN–28).

DI0RK–07

CUSTOMER PROBLEM ANALYSIS CHECK

ENGINE CONTROL SYSTEM Check Sheet

Inspector's Name

Customer's Name		Model and Model Year	
Driver's Name		Frame No.	
Date Vehicle Brought in		Engine Model	
License No.		Odometer Reading	km miles

Problem Symptoms	☐ Engine does not Start	☐ Engine does not crank ☐ No initial combustion ☐ No complete combustion
	☐ Difficult to Start	☐ Engine cranks slowly ☐ Other _____
	☐ Poor Idling	☐ Incorrect first idle ☐ Idling rpm is abnormal ☐ High (rpm) ☐ Low (rpm) ☐ Rough idling ☐ Other _____
	☐ Poor Driveability	☐ Hesitation ☐ Back fire ☐ Muffler explosion (after–fire) ☐ Surging ☐ Knocking ☐ Other _____
	☐ Engine Stall	☐ Soon after starting ☐ After accelerator pedal depressed ☐ After accelerator pedal released ☐ During A/C operation ☐ Shifting from N to D ☐ Other _____
	☐ Others	

Dates Problem Occurred		
Problem Frequency		☐ Constant ☐ Sometimes (times per day/month) ☐ Once only ☐ Other _____
Condition When Problem Occurs	Weather	☐ Fine ☐ Cloudy ☐ Rainy ☐ Snowy ☐ Various/Other _____
	Outdoor Temperature	☐ Hot ☐ Warm ☐ Cool ☐ Cold (approx. ____°F/____°C)
	Place	☐ Highway ☐ Suburbs ☐ Inner city ☐ Uphill ☐ Downhill ☐ Rough road ☐ Other _____
	Engine Temp.	☐ Cold ☐ Warming up ☐ After warming up ☐ Any temp. ☐ Other _____
	Engine Operation	☐ Starting ☐ Just after starting (min.) ☐ Idling ☐ Racing ☐ Driving ☐ Constant speed ☐ Acceleration ☐ Deceleration ☐ A/C switch ON/OFF ☐ Other _____

Condition of MIL		☐ Remains on	☐ Sometimes lights up ☐ Does not light up
DTC Inspection	Normal Mode (Precheck)	☐ Normal	☐ Malfunction code(s) (code) ☐ Freezed frame data ( )
	Check Mode	☐ Normal	☐ Malfunction code(s) (code) ☐ Freezed frame data ( )

DI0N3–02

CIRCUIT INSPECTION

DTC	11, 15	Actuator Motor Circuit

CIRCUIT DESCRIPTION

The actuator motor is operated by signals from the ECU. Acceleration and deceleration signals are transmitted according to changes in the Duty Ratio (See below).

Duty Ratio

The duty ratio is the ratio of the period of continuity in one cycle. For example, if A is the period of continuity in one cycle, and B is the period of non–continuity.

$$\text{Duty Ratio} = \frac{A}{A + B} \times 100\ (\%)$$

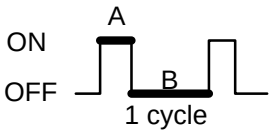

DTC No.	Detection Item	Trouble Area
11	Short in actuator motor circuit	• Harness or connector between actuator and cruise control ECU • Cruise control actuator • Cruise control ECU
15	Open in actuator	• Actuator motor

WIRING DIAGRAM

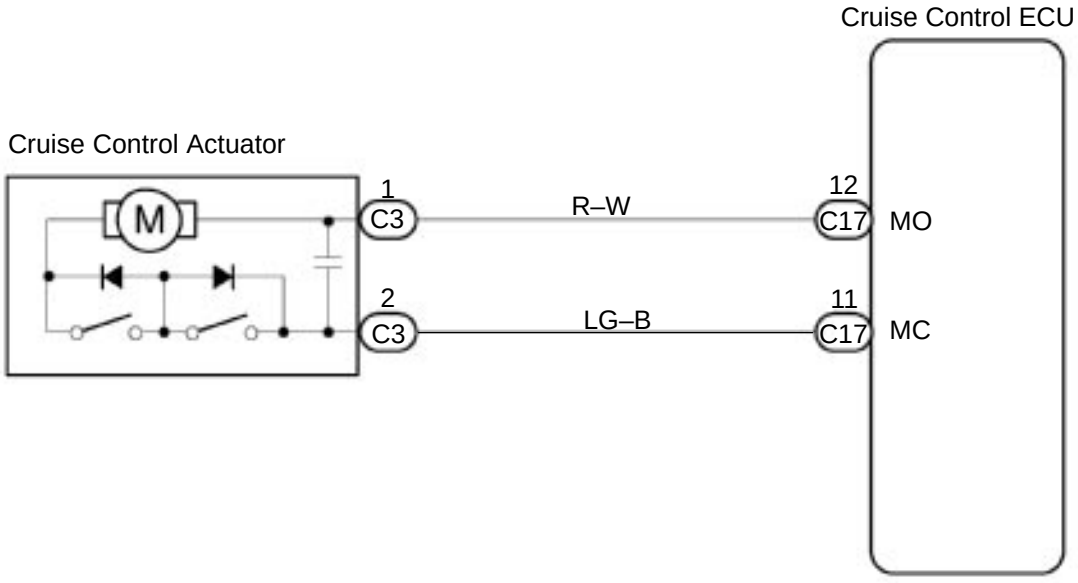

I01941

INSPECTION PROCEDURE

1	Check resistance between terminals MO and MC of cruise control actuator.

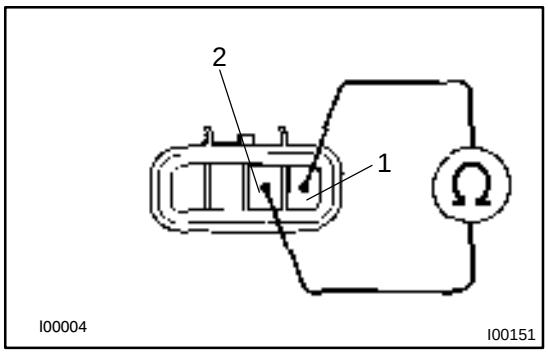

PREPARATION:

(a) Ignition switch ON.

(b) Disconnect actuator connector.

CHECK:

Measure resistance between terminals 1 and 2.

HINT:

If control plate position is fully opened or fully closed, resistance can not be measured.

OK:

Resistance: more than 4.2 Ω

NG → **Replace cruise control actuator.**

OK

2	Check wire harness and connector between terminals MO of cruise control ECU and MO of cruise control actuator (See page IN–28).

NG → **Repair or replace harness or connector.**

OK

Replace cruise control ECU (See page IN–28).

DI0N4–02

DTC	12	Magnetic Clutch Circuit

CIRCUIT DESCRIPTION

This circuit turns on the magnetic clutch inside the actuator during cruise control operation according to the signal from the ECU. If a malfunction occurs in the actuator or speed sensor, etc. during cruise control operation, the rotor shaft between the motor and control plate is released.
When the brake pedal is depressed, the stop light switch turns on, supplying electrical power to the stop light. Power supply to the magnetic clutch is mechanically cut and the magnetic clutch is turned OFF.
When driving downhill, if the vehicle speed exceeds the set speed by 15 km/h (6 mph), cruise control at the set speed is resumed.

DTC No.	Detection Item	Trouble Area
12	• Short in magnetic clutch circuit. • Open (0.8 sec.) in magnetic clutch circuit	• Harness or connector between ECU and magnetic clutch, magnetic clutch and body ground • STOP fuse and stop light switch • Cruise control actuator magnetic clutch • Cruise control ECU

WIRING DIAGRAM

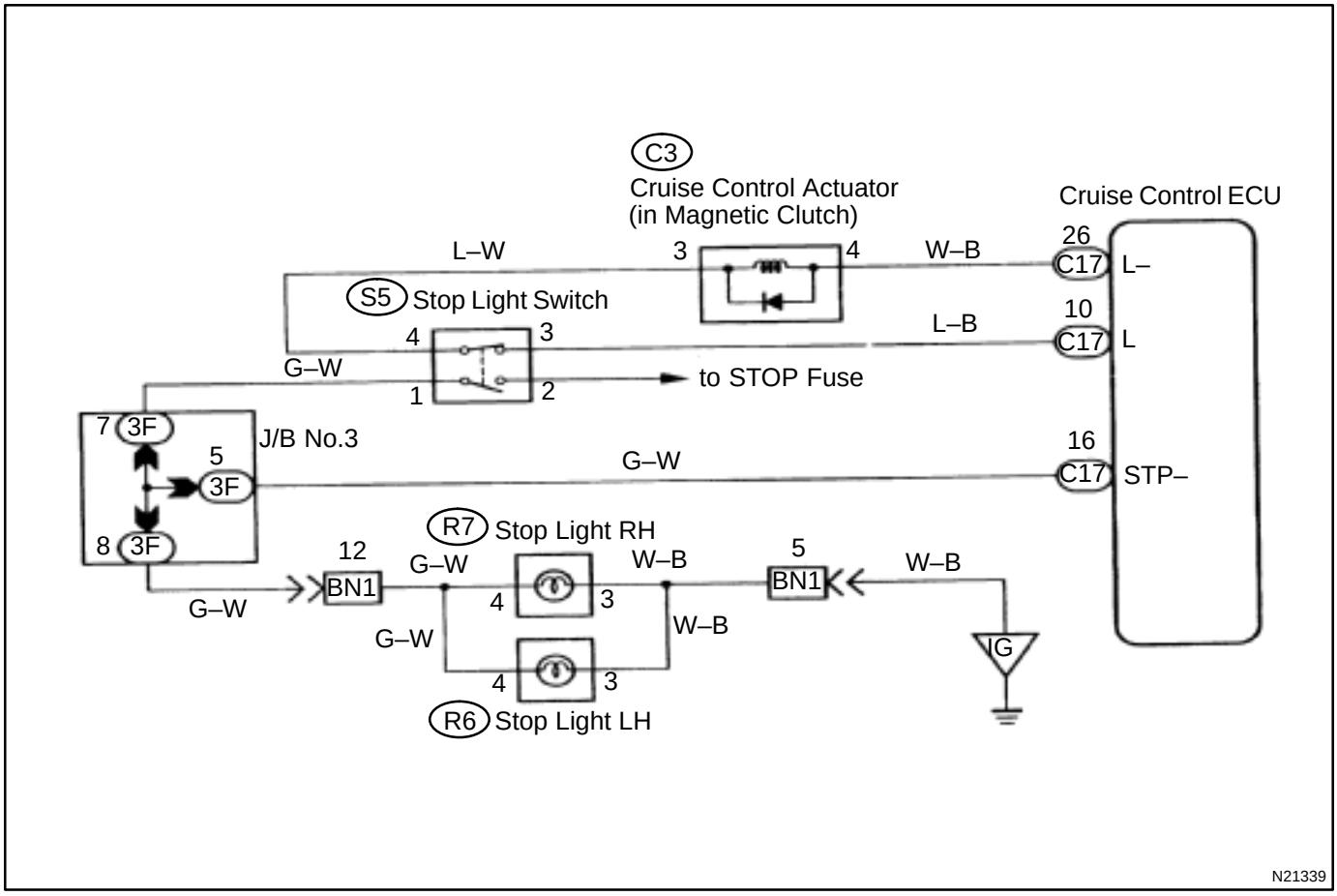

INSPECTION PROCEDURE

1	**Check STOP fuse.**

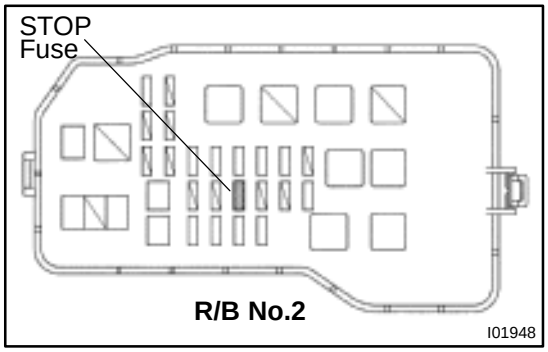

PREPARATION:
Remove STOP fuse from Relay Block No.2.
CHECK:
Check fuse continuity.
OK:
There is continuity.

NG → **Replace STOP fuse.**

OK

2	**Check stop light switch.**

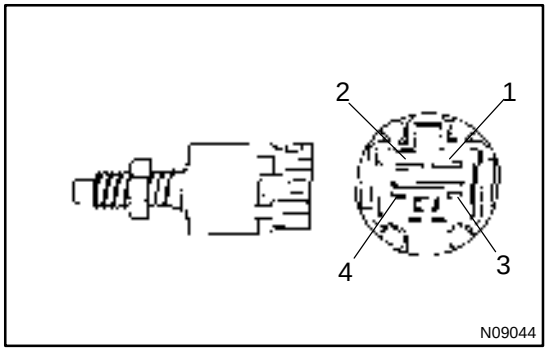

PREPARATION:
Disconnect stop light switch connector.
CHECK:
Check continuity between terminals.
OK:

Switch position	Continuity
Switch pin free (Brake pedal depressed)	1 – 2
Switch pin pushed in (Brake pedal released)	3 – 4

NG → **Replace stop light switch.**

OK

3	**Check harness and connector between actuator and cruise control actuator (See page IN–28).**

NG → **Repair or replace harness or connector.**

OK

Check and replace cruise control ECU (See page IN–28).

DI0N6–02

DTC	14	Actuator Mechanical Malfunction

CIRCUIT DESCRIPTION

DTC No.	Detection Item	Trouble Area
14	• Open in actuator motor circuit. • Position sensor signal valve does not change when the motor operates.	• Cruise control actuator motor • Harness or connector between actuator motor and ECU • Harness or connector between actuator position sensor and body ground • Cruise control actuator position sensor • Cruise control ECU

WIRING DIAGRAM

See page DI–570

INSPECTION PROCEDURE

1	Check actuator arm locking operation

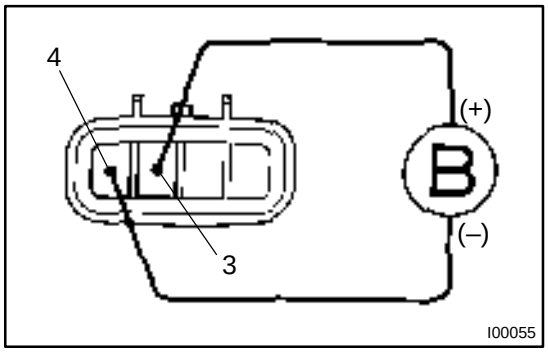

PREPARATION:

(a) Ignition switch OFF.

(b) Disconnect actuator connector.

CHECK:

(a) Connect the positive (+) lead from the battery to the terminal 3 of actuator and the negative (–) lead to terminal 4.

NOTICE:

Do not connect the high tension cables to the wrong battery terminal. The cruise control actuator will be damaged.

(b) Move the control plate by hands.

OK:

Control plate doesn't move.

NG → **Replace cruise control actuator.**

OK

2	**Check actuator operation.**

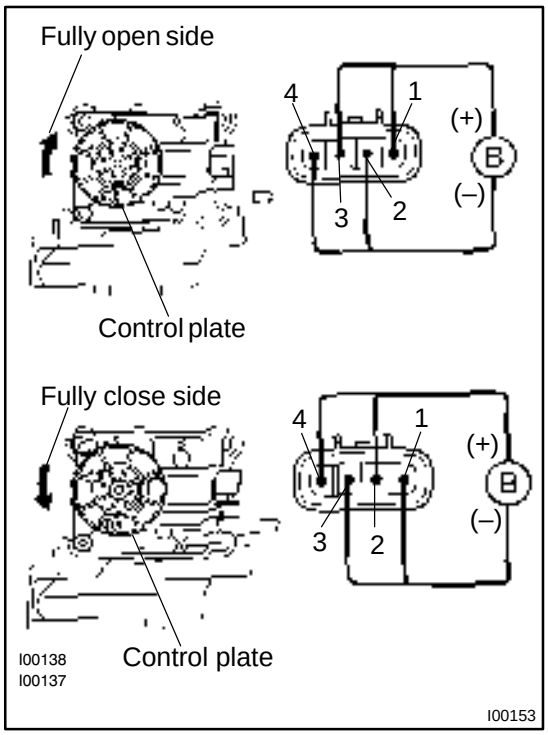

PREPARATION:

Disconnect the actuator connector.

CHECK:

Connect the positive (+) lead from the battery to terminals 1 and 3 of actuator, connect the negative (–) lead to terminals 2 and 4 of actuator.

OK:

Control arm moves to fully open side

CHECK:

Connect the positive (+) lead from the battery to terminals 2 and 4 of actuator, connect the negative (–) lead to terminals 1 and 3 of actuator.

OK:

Control arm moves to fully close side

NG → **Replace actuator.**

OK

3	**Check harness and connector between actuator and cruise control ECU (See page IN–28).**

NG → **Repair or replace harness or connector.**

OK

Check and replace cruise control ECU (See page IN–28).

DI0N7–03

DTC	21	Open in Vehicle Speed Sensor Circuit

CIRCUIT DESCRIPTION

The signal from the vehicle speed sensor circuit is sent to cruise control ECU as vehicle speed signal. For each rotation of the shaft, the vehicle speed sensor sends a signal through the combination meter to the cruise control ECU (See the following illustration). The ECU calculates the vehicle speed from this pulse frequency.

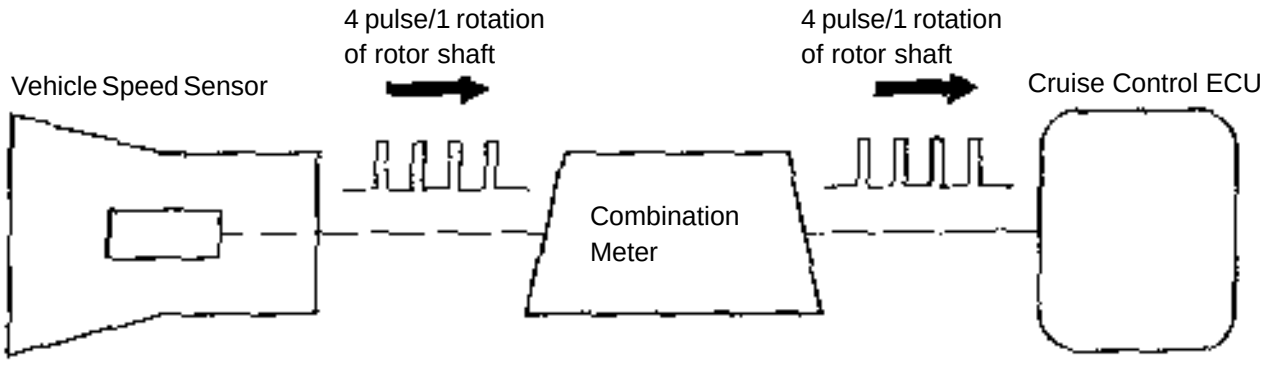

I00736

DTC No.	Detection Item	Trouble Area
21	Speed signal is not input to the cruise control ECU while cruise control is set.	• Vehicle speed sensor • Combination meter • Harness or connector between vehicle speed sensor and combination meter, combination meter and cruise control ECU • Cruise control ECU

WIRING DIAGRAM

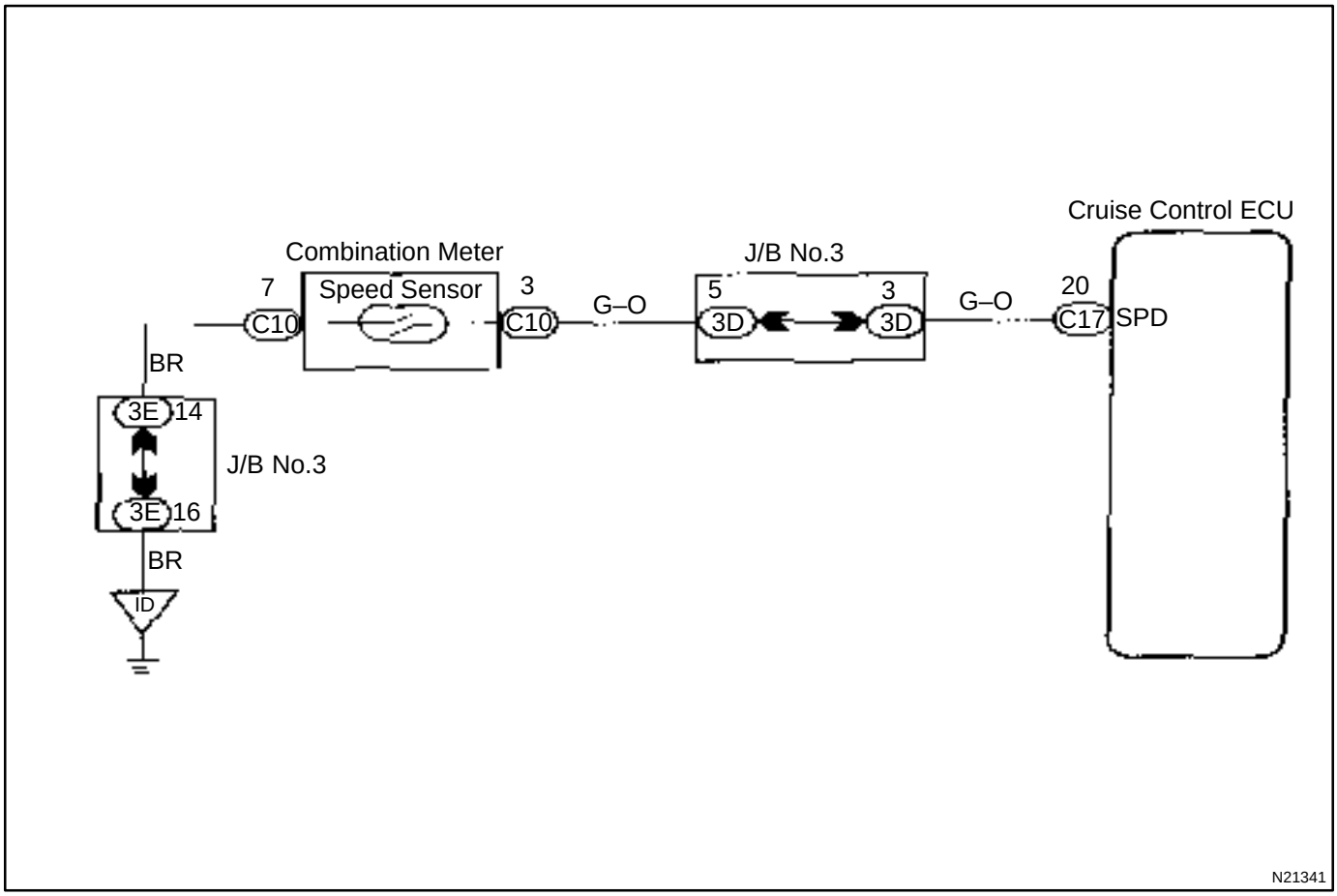

INSPECTION PROCEDURE

1	**Input signal check.**

Input Signal	Indicator Light Blinking Pattern
Drive at about 40 km/h (25 mph) or below	Light: ON — OFF
Drive at about 40 km/h (25 mph) or higher	Light: ON / OFF (blinking)

CHECK:

(a) See input signal check on page DI–559.

(b) Check indicator light operation when driving with vehicle speed above 40 km/h (25 mph), and with vehicle speed below 40 km/h (25 mph).

OK:

Vehicle speed above 40 km/h (25 mph):
Indicator light blinks

Vehicle speed below 40 km/h (25 mph):
Indicator light stays on

OK	**Check and replace cruise control ECU (See page IN–28).**

NG

2	**Check harness and connector between speed meter and cruise control ECU (See page IN–28).**

NG → **Repair or replace harness or connector.**

OK

3	**Check vehicle speed sensor (See page BE–38).**

NG → **Replace vehicle speed sensor.**

OK

Check and replace cruise control ECU (See page IN–28).

DI0N8–02

DTC	23	Vehicle Speed Signal Abnormal

CIRCUIT DESCRIPTION

See page DI–577.

DTC No.	Detection Item	Trouble Area
23	Vehicle speed sensor pulse is abnormal.	• Vehicle speed sensor • Cruise control ECU

WIRING DIAGRAM

See page DI–577.

INSPECTION PROCEDURE

1	**Check vehicle speed sensor (See page BE–2).**

NG → **Replace vehicle speed sensor.**

OK

Check and replace cruise control ECU (See page IN–28).

DI0N9–02

DTC	32	Control Switch Circuit (Cruise Control Switch)

CIRCUIT DESCRIPTION

This circuit carries the SET/COAST, RESUME/ACCEL and CANCEL signals (each voltage) to the ECU.

DTC No.	Detection Item	Trouble Area
32	Short in control switch circuit	• Harness or connector between control switch and cruise control ECU. • Cruise control switch • Cruise control ECU

WIRING DIAGRAM

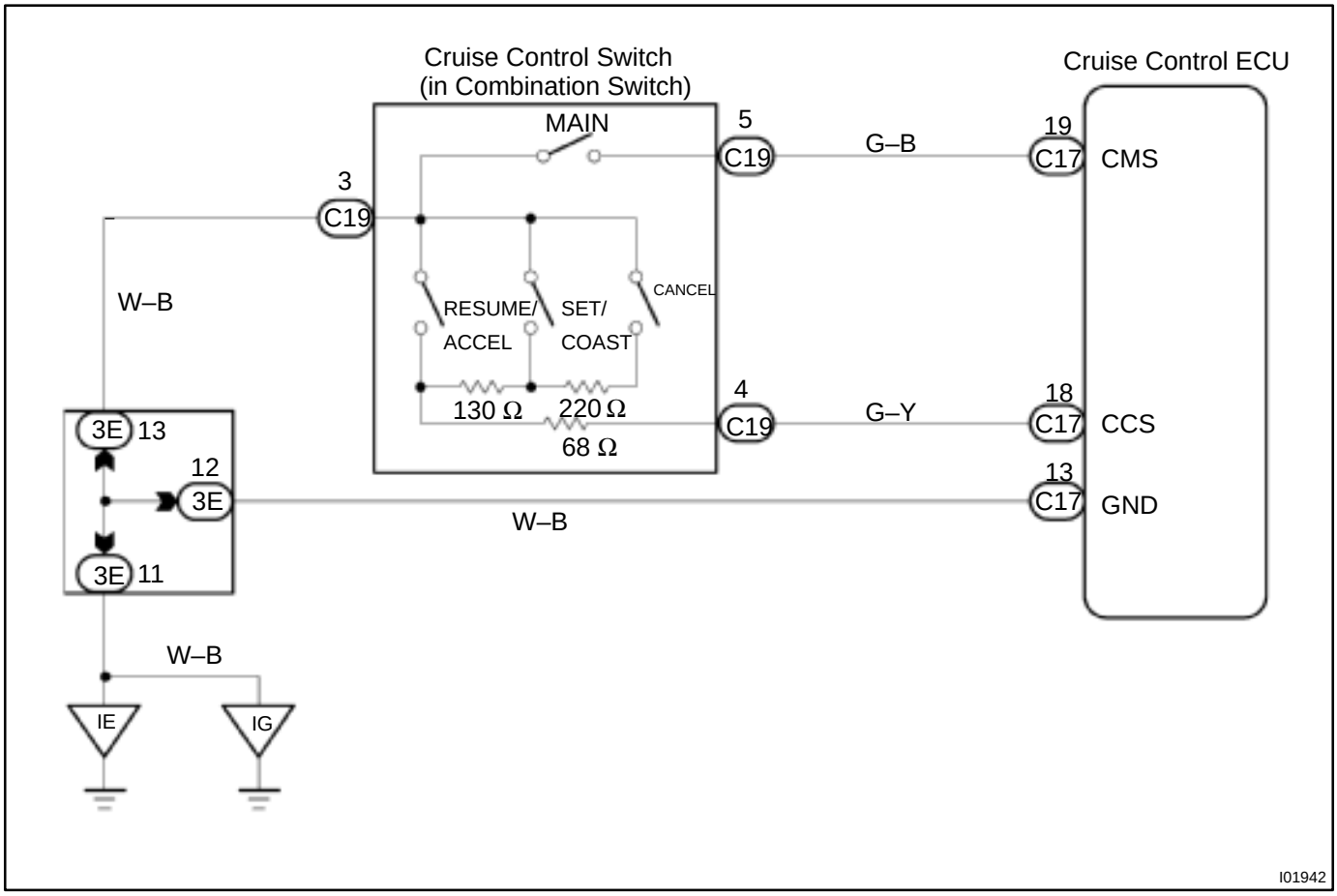

INSPECTION PROCEDURE

1	Input signal check.

Input Signal	Indicator Light Blinking Pattern
SET/COAST switch	ON / OFF — 2 Pulses
RESUME/ACCEL switch	ON / OFF — 3 Pulses
CANCEL switch	ON / OFF — SW OFF, SW ON

PREPARATION:

See input signal check on page DI–559.

CHECK:

Check the indicator light operation when each of the SET/COAST, RESUME/ACCEL and CANCEL is turned on.

OK:

SET/COAST, RESUME/ACCEL switch

The signals shown in the table on the left should be output when each switch is ON. The signal should disappear when the switch is turned OFF.

CANCEL switch

The indicator light goes off when the cancel switch is turned ON.

OK → **Wait and see.**

NG

2	Check control switch.

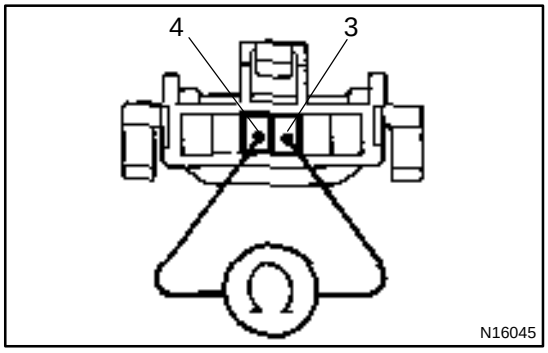

PREPARATION:

(a) Remove steering wheel center pad.

(b) Disconnect control switch connector.

CHECK:

Measure resistance between terminals 3 and 4 of control switch connector when control switch is operated.

Switch position	Resistance (Ω)
Neutral	∞ (No continuity)
RES/ACC	50 – 80
SET/COAST	180 – 220
CANCEL	400 – 440

OK → **Replace control switch.**

NG

3	**Check harness and connector between cruise control switch and cruise control ECU (See page IN–28).**

NG → **Repair or replace harness or connector.**

OK

4	**Input signal check (See step 1).**

OK → **Wait and see.**

NG

Check and replace cruise control ECU (See page IN–28).

DI213–02

Back–up Power Source Circuit

CIRCUIT DESCRIPTION

The ECU back–up power source provides power even when the ignition is off and is used for DTC memory, etc..

WIRING DIAGRAM

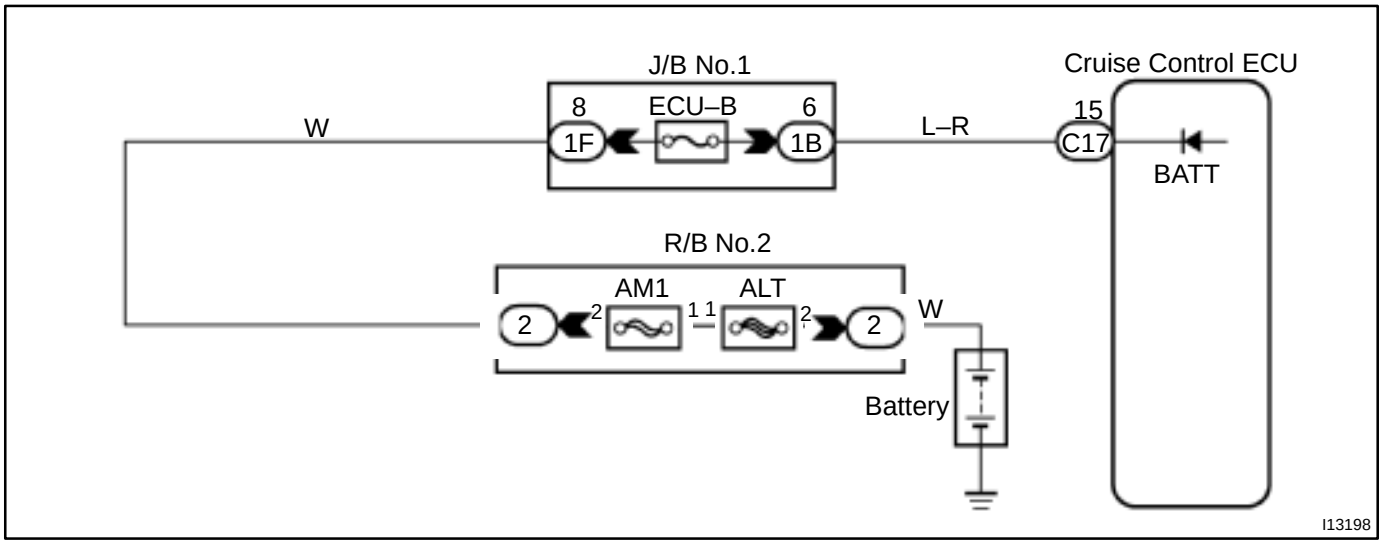

INSPECTION PROCEDURE

1	**Check ECU–B fuse.**

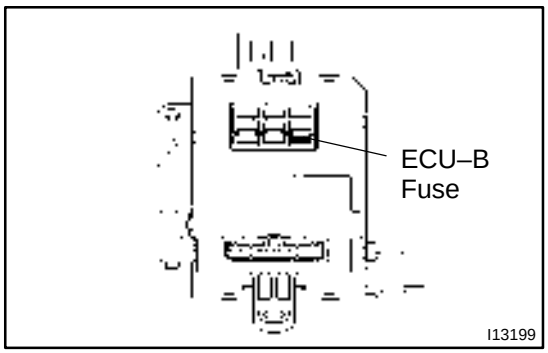

PREPARATION:
Remove ECU–B fuse from junction block No. 1.
CHECK:
Check continuity of ECU–B fuse.
OK:
Continuity

NG → **Check for short in all the harness and components connected to the ECU–B fuse.**

OK

2	**Check voltage between terminal BATT of cruise control ECU connector and body ground (See page IN–18).**

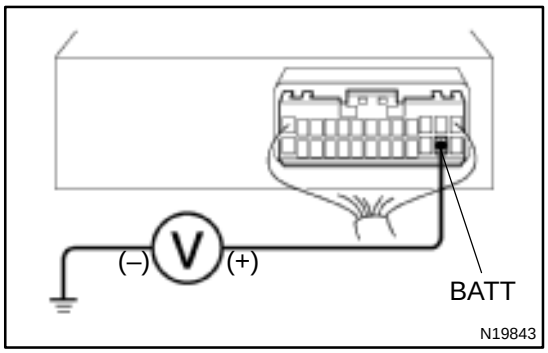

PREPARATION:
Remove cruise control ECU with connector still connected.
CHECK:
Measure voltage between terminal BATT of cruise control ECU connector and body ground.
OK:
Voltage: 10 – 14 V

OK → **Proceed to next circuit inspection shown on problem symptoms table (See page DI–568).**

NG

Check and repair harness and connector between battery and cruise control ECU (See page IN–18).

DI0NK–02

Actuator Control Cable

INSPECTION PROCEDURE

1	**Actuator control cable inspection**

CHECK:

(a) Check that the actuator, control cable throttle link are properly installed and that the cable and link are connected correctly.

(b) Check that the actuator and bell crank operate smoothly.

(c) Check that the cable is not loose or too tight.

OK:

Freeplay: Less than 10 mm

HINT:

- If the control cable is very loose, the vehicle's loss of speed going uphill will be large.
- If the control cable is too tight, the idle RPM will become high.

DI18A–02

Clutch Switch Circuit

CIRCUIT DESCRIPTION

When the clutch pedal is depressed, the clutch switch sends a signal to the cruise control ECU. When the signal is input to the cruise control ECU during cruise control driving, the cruise control ECU cancels cruise control.

WIRING DIAGRAM

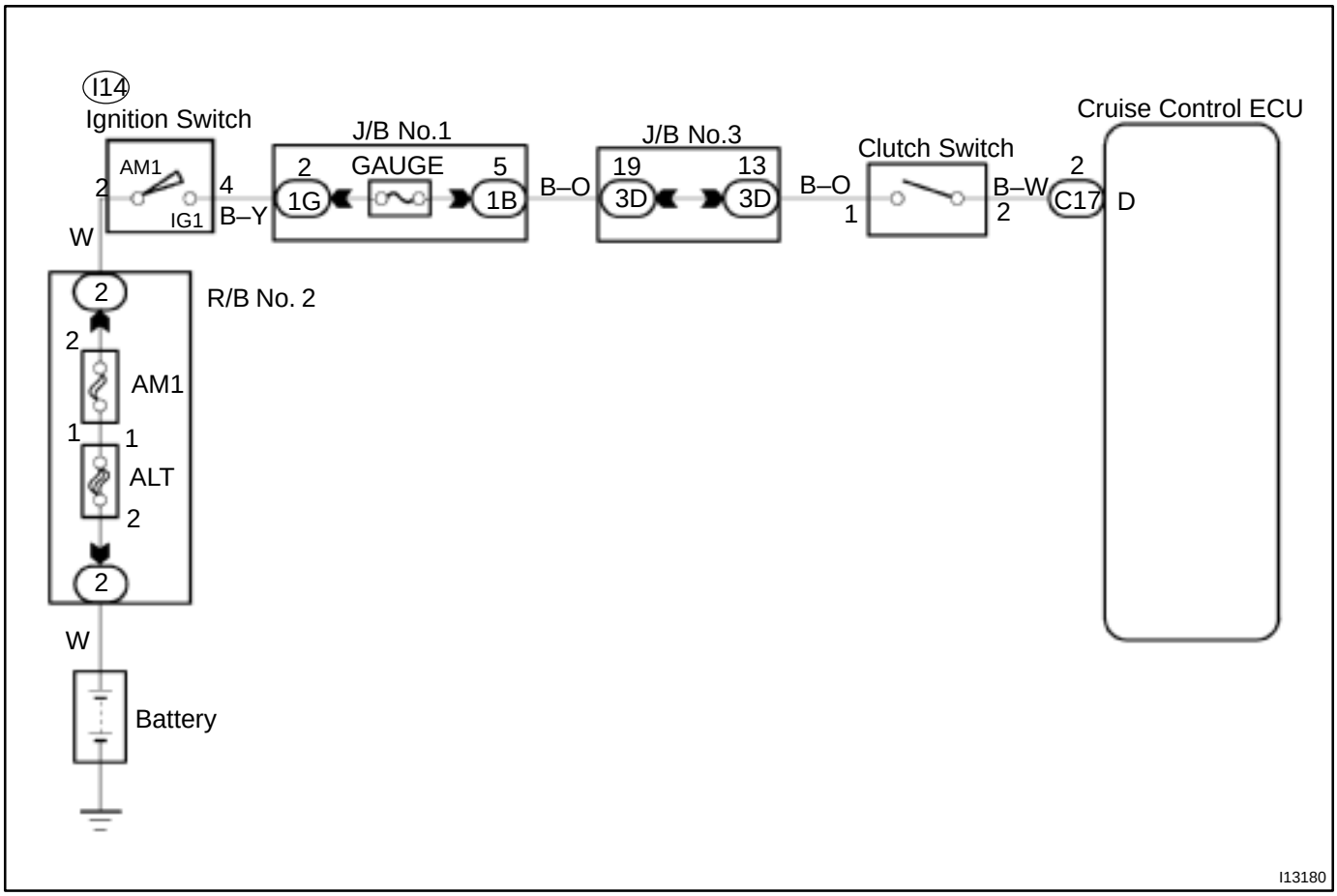

INSPECTION PROCEDURE

1	**Check starter operation.**

CHECK:

Check that the starter operates normally and that the engine starts.

NG → **Proceed to engine troubleshooting (See page DI–1).**

OK

2	**Input signal check.**

Input Signal	Indicator Light Blinking Pattern
Clutch switch OFF (Depress clutch pedal)	Light: ON (SW ON) / OFF (SW OFF)

PREPARATION:

See input signal check on page DI–559.

CHECK:

Check the indicator light when clutch pedal is depressed.

OK:

The indicator light goes off when clutch pedal is depressed.

OK → **Proceed to next circuit inspection shown on problem symptoms table (See page DI–568).**

NG

3	**Check voltage between terminal D of cruise control ECU and body ground.**

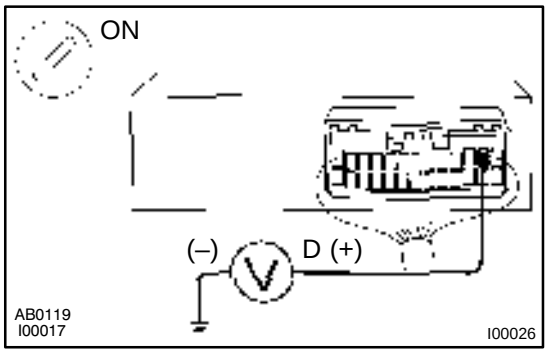

PREPARATION:

Turn ignition switch ON.

CHECK:

Measure voltage between terminal D of cruise control ECU connector and body ground when clutch pedal is depressed and pushed in.

OK:

Shift Position	Voltage
Clutch pedal depressed	10 – 14 V
Clutch pedal pushed in	Below 1 V

OK → **Proceed to next circuit inspection shown on problem symptoms table (See page DI–568).**

NG

4	**Check for open in harness and connector between ECU and GAUGE fuse (See page IN–28).**

NG → **Repair or replace harness or connector.**

OK

Check and replace cruise control ECU (See page IN–28).

DI0NC–03

Electronically Controlled Transmission Communication Circuit

CIRCUIT DESCRIPTION

When driving uphill under the cruise control, in order to reduce shifting due to ON–OFF overdrive operation and to provide smooth driving, when down shifting in the electronically controlled transmission occurs, a signal to prevent upshift until the end of the uphill slope is sent from the cruise control ECU to the electronically controlled transmission.

Terminal ECT of the cruise control ECU detects the shift change signal (output to electronically controlled transmission No. 2 solenoid) from the electronically controlled transmission.

If a or the vehicle speeds down, also when terminal electronically controlled transmission of the cruise control ECU receives down shifting signal, it sends a signal from terminal OD to ECM to cut overdrive until the end of the uphill slope, and the gear shifts are reduced and gear shift points in the electronically controlled transmission are changed.

WIRING DIAGRAM

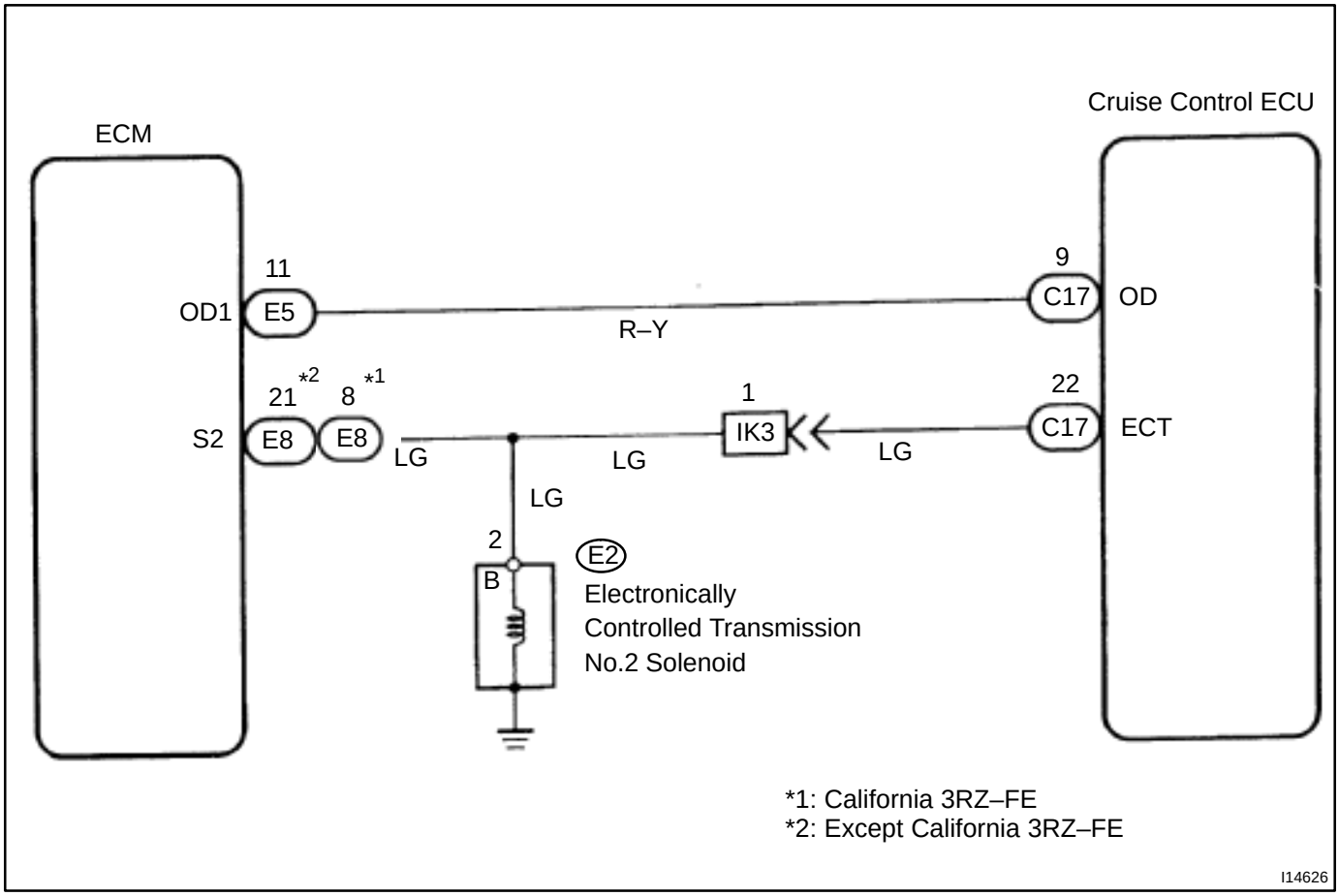

INSPECTION PROCEDURE

1	**Check operation of overdrive.**

PREPARATION:
Test drive after engine warms up.
CHECK:
Check that overdrive ON ↔ OFF occurs with operation of OD switch ON–OFF.

NG → **Check and repair electronically controlled transmission (See page DI–340).**

OK

2	**Check voltage between terminal OD of harness side connector of cruise control ECU and body ground.**

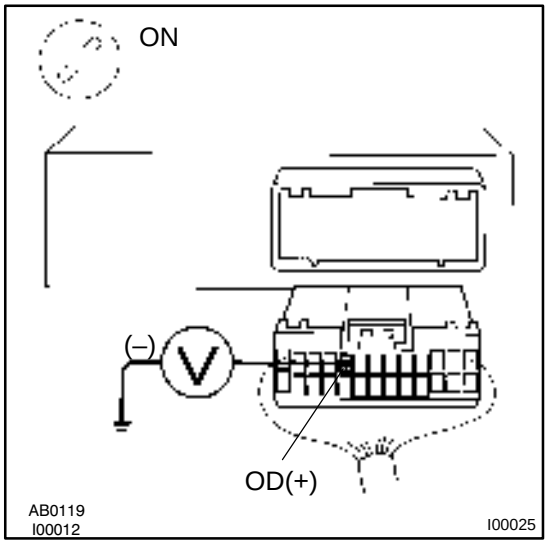

PREPARATION:
Remove cruise control ECU with connector still connected.
CHECK:
(a) Disconnect cruise control ECU connector.
(b) Turn ignition switch ON.
(c) Measure voltage between terminal OD of harness side connector of cruise control ECU and body ground.

OK:

Voltage: 10 – 14 V

NG → **Go to step 5.**

OK

3	Check voltage between terminal ECT of cruise control ECU connector and body ground (On test drive).

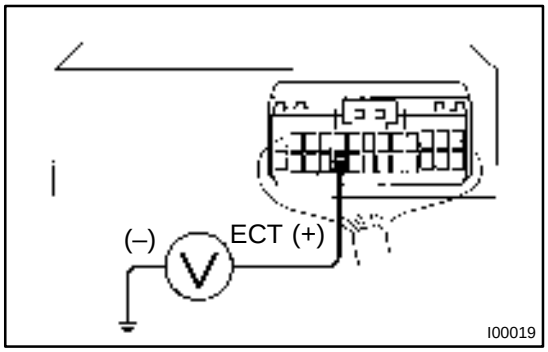

PREPARATION:

(a) Connect cruise control ECU connector.

(b) Test drive after engine warms up.

CHECK:

Check voltage between terminal ECT of cruise control ECU connector and body ground when OD switch is ON and OFF.

OK:

OD switch position	Voltage
ON	8 – 14 V
OFF	Below 0.5 V

OK → **Proceed to next circuit inspection shown on problem symptoms table(See page DI–568).**

NG

4	Check harness and connector between terminal ECT of cruise control ECU and electronically controlled transmission solenoid (See page IN–28).

NG → **Repair or replace harness or connector.**

OK

Check and replace cruise control ECU (See page IN–28).

5	Check harness and connector between terminal OD of cruise control ECU and terminal OD1 of ECM (See page IN–28).

NG → **Repair or replace harness or connector.**

OK

Check and replace cruise control ECU (See page IN–28).

ECU Power Source Circuit

CIRCUIT DESCRIPTION

The ECU power source supplies power to the actuator and sensors, etc., when terminal GND and the cruise control ECU case are grounded.

WIRING DIAGRAM

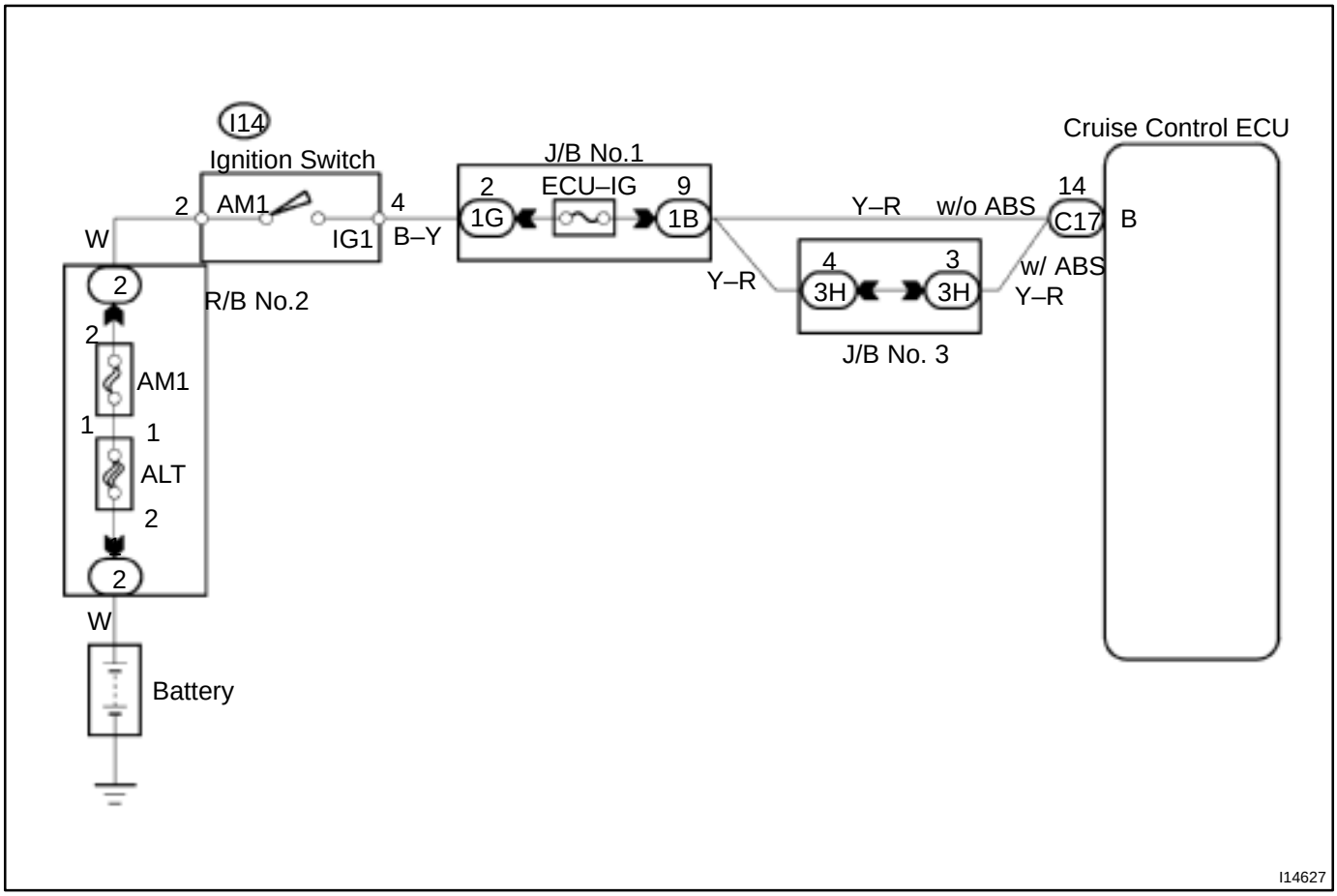

INSPECTION PROCEDURE

1	**Check ECU–IG fuse.**

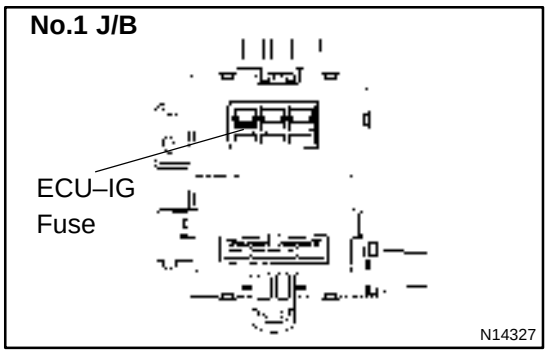

PREPARATION:
Remove ECU–IG fuse from junction block No.1.
CHECK:
Check continuity of ECU–IG fuse.
OK:
Continuity

NG → **Check for short in all the harness and components connected to ECU–IG fuse.**

OK

2	**Check voltage between terminals B and GND of cruise control ECU connector.**

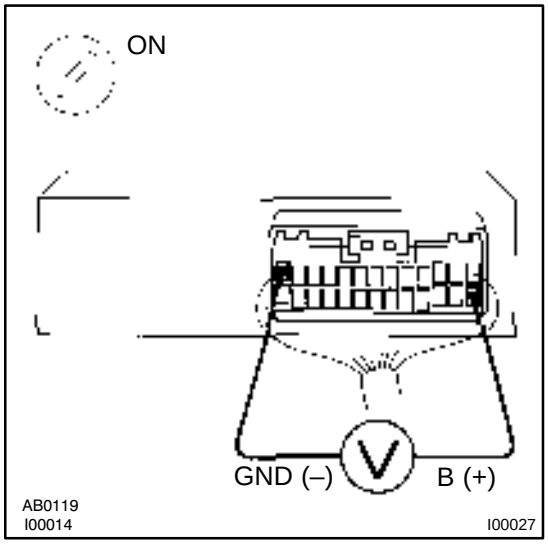

PREPARATION:
Remove cruise control ECU with connector still connected.
CHECK:
(a) Turn ignition switch ON.
(b) Measure voltage between terminals B and GND of cruise control ECU connector.
OK:
Voltage: 10 – 14 V

OK → **Proceed to next circuit inspection shown on problem symptoms table (See page DI–568).**

NG

3	**Check resistance between terminal GND of cruise control ECU connector and body ground (See page IN–28).**

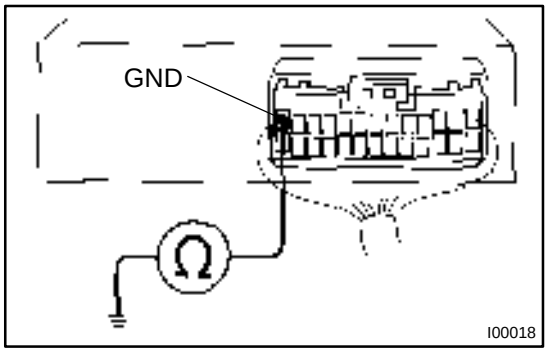

CHECK:

Measure resistance between terminal GND of cruise control ECU connector and body ground.

OK:

Resistance: Below 1 Ω

NG → **Repair or replace harness or connector.**

OK

Check and repair harness and connector between battery and cruise control ECU (See page IN–28).

DI189–02

Idle Switch Circuit

CIRCUIT DESCRIPTION

When the idle switch is turned ON, a signal is sent to the ECU. The ECU uses this signal to correct the discrepancy between the throttle valve position and the actuator position sensor valve to enable accurate cruise control at the set speed. If the idle switch is malfunctioning, problem symptoms also occur in the engine, so also inspect the engine.

WIRING DIAGRAM

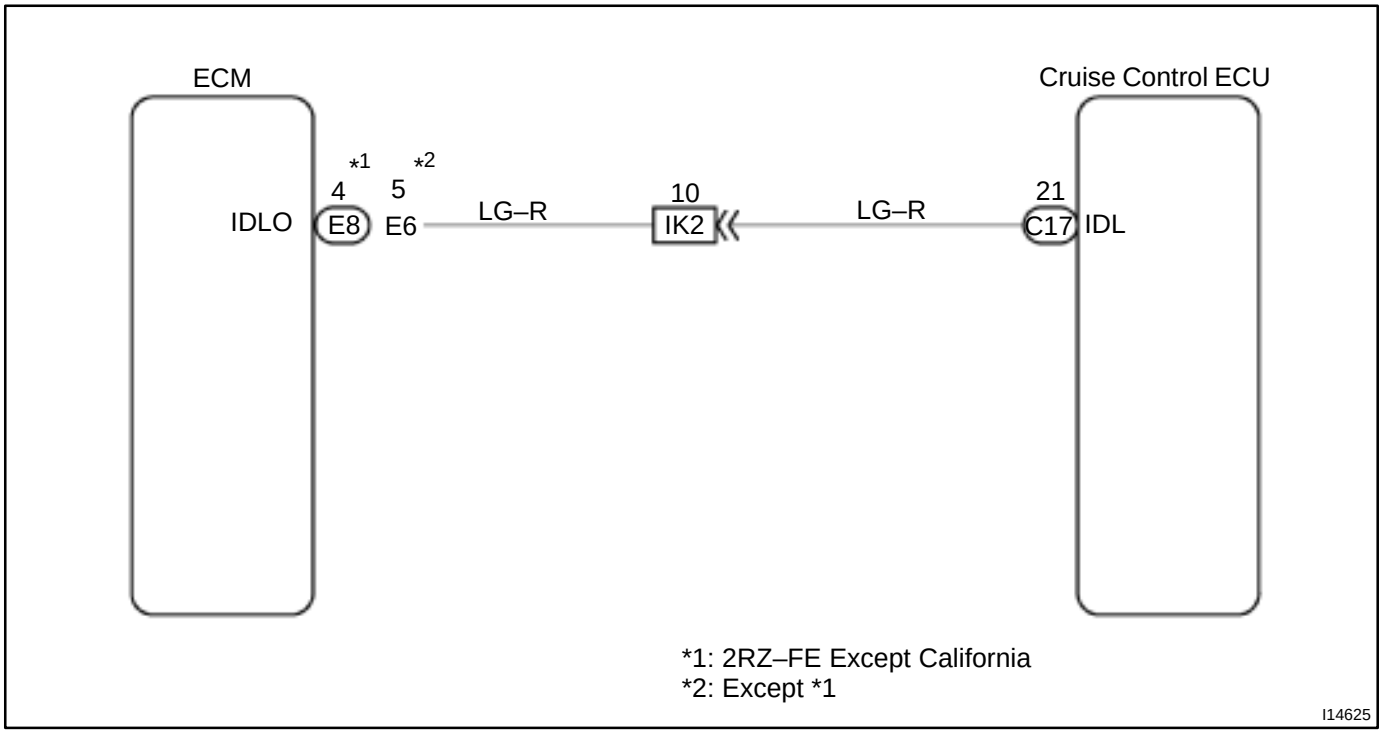

INSPECTION PROCEDURE

1	**Check voltage between terminal IDL of ECU connector and body ground.**

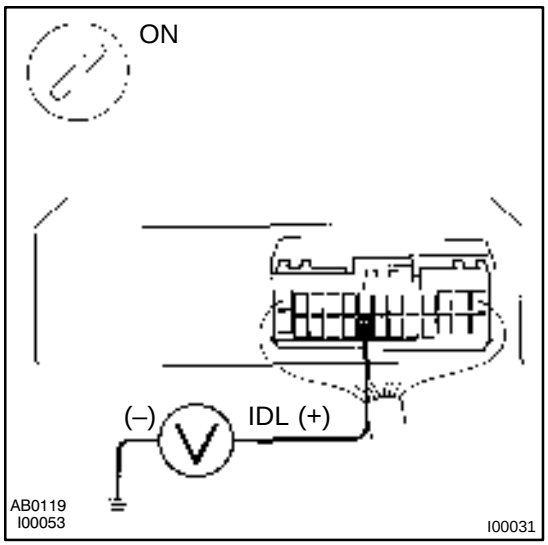

PREPARATION:

(a) Remove cruise control ECU with connector still connected.
(b) Disconnect ECM and ABS ECU connectors.
(c) Ignition switch ON.

CHECK:

Measure voltage between terminal IDL of ECU connector and body ground when the throttle valve is fully closed and fully opened.

OK:

Throttle valve position	Voltage
Fully opened	10 – 14 V
Fully closed	Below 2 V

OK → **Proceed to next circuit inspection shown on problem symptoms table (See page DI–568).**

NG

2	**Check for open and short in harness and connector between ECU and throttle position sensor, throttle position sensor and body ground (See page IN–28).**

NG → **Repair or replace harness or connector.**

OK

Check and replace cruise control ECU (See page IN–28).

DI0NI–03

CRUISE MAIN Indicator Light Circuit

CIRCUIT DESCRIPTION

When the cruise control main switch is turned ON, CRUISE MAIN indicator light lights up.

WIRING DIAGRAM

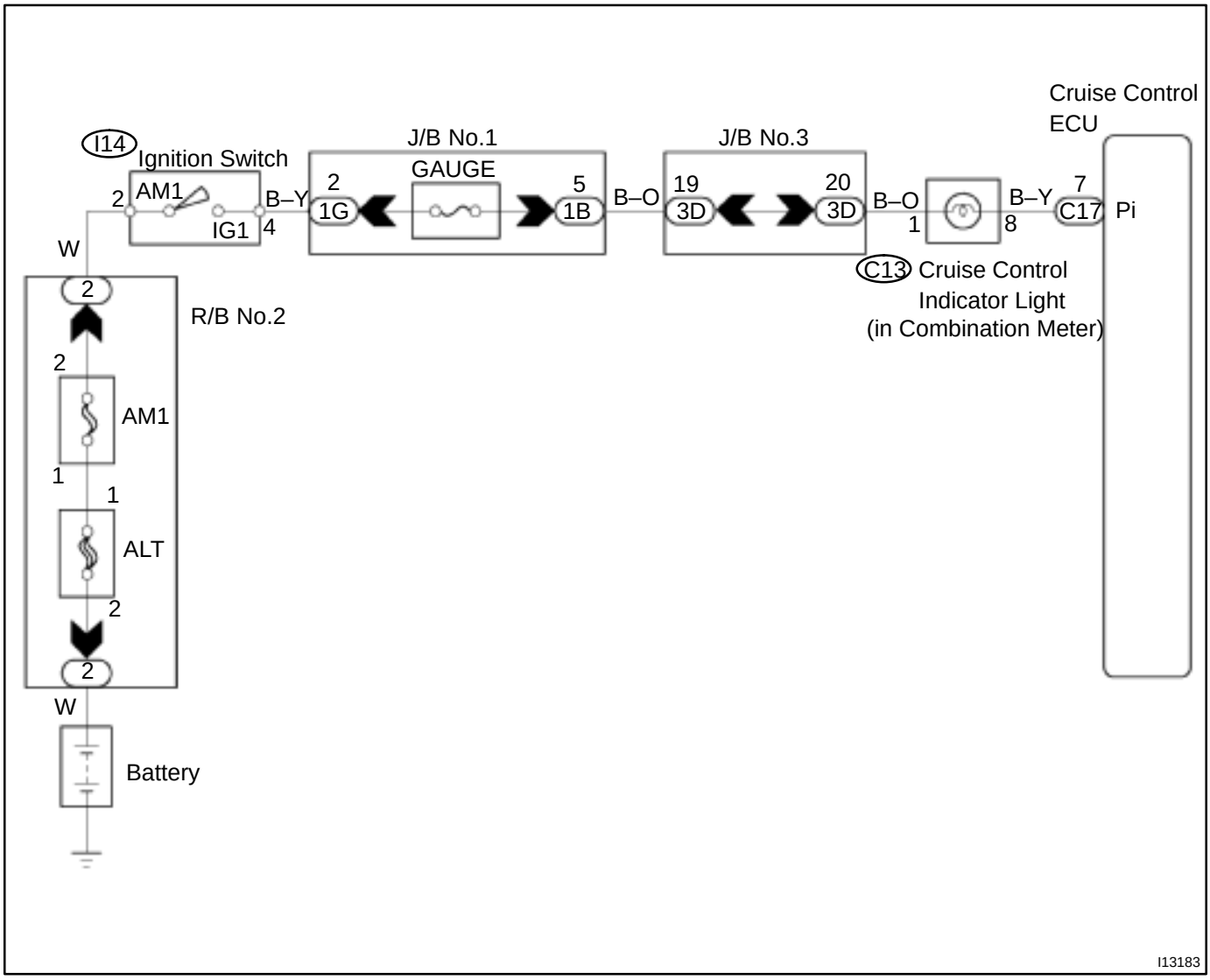

INSPECTION PROCEDURE

1	**Check voltage between terminals PI and GND of cruise control ECU connector.**

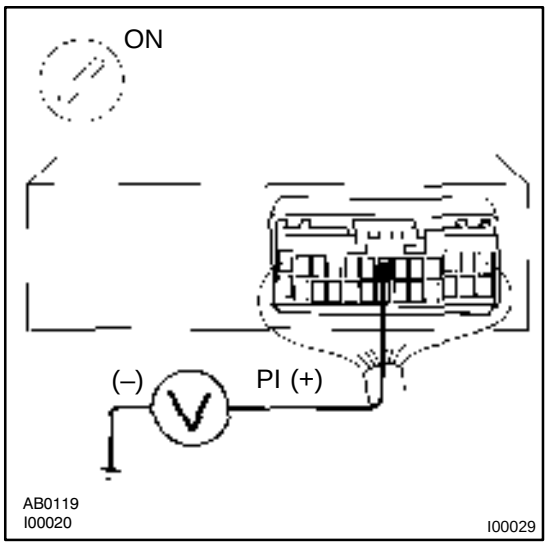

PREPARATION:
Ignition switch ON.
CHECK:
Measure voltage between terminals PI and GND of cruise control ECU connector when main switch is on and off.
OK:

Switch position	Voltage
OFF	10 – 16 V
ON	Below 1.2 V

OK → **Proceed to next circuit inspection shown on problem symptoms table. (See page DI–568)**

NG

2	**Check combination meter (See page BE–2).**

NG → **Replace combination meter.**

OK

Check and replace cruise control ECU (See page IN–28).

DI0NH–02

Main Switch Circuit (Cruise Control Switch)

CIRCUIT DESCRIPTION

When the cruise control main switch is turned off, the cruise control does not operate.

WIRING DIAGRAM

See page DI–581.

INSPECTION PROCEDURE

1	**Check voltage between terminal CMS of cruise control ECU connector and body ground.**

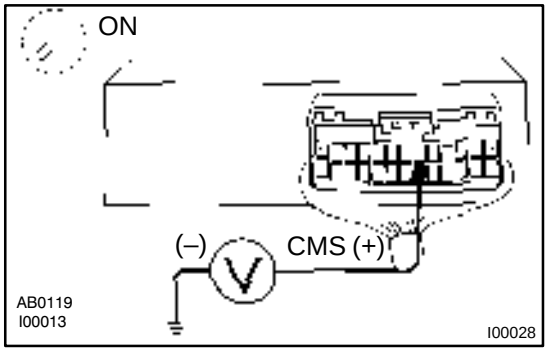

PREPARATION:

Remove cruise control ECU with connector still connected.

CHECK:

(a) Turn ignition switch ON.

(b) Measure voltage between terminal CMS of cruise control ECU connector when main switch is held on and off.

OK:

Main switch	Voltage
OFF	10 – 14 V
ON	Below 1 V

OK → **Proceed to next circuit inspection shown on problem symptoms table (See page DI–568).**

NG

2	**Check main switch continuity.**

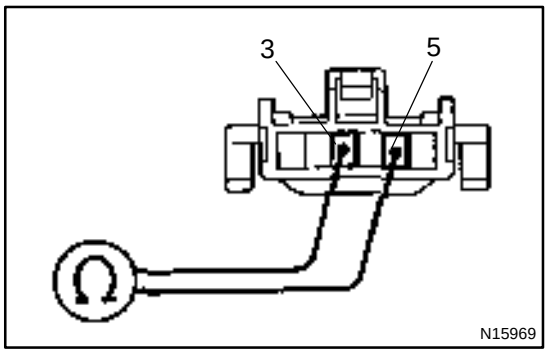

PREPARATION:

(a) Remove steering wheel center pad. (See page SR–13)

(b) Disconnect cruise control switch connector.

CHECK:

Check continuity between terminals 3 and 5 of cruise control switch connector when main switch is held on and off.

OK:

Switch position	Tester connection	Specified condition
OFF	3 – 5	No continuity
Hold ON	3 – 5	Continuity

NG → **Replace control switch.**

OK

3	**Check harness and connector between cruise control ECU and main switch (See page IN–28).**

NG → **Repair or replace harness or connector.**

OK

Check and replace cruise control ECU (See page IN–28).

Park/Neutral Position Switch Circuit

CIRCUIT DESCRIPTION

When the shift position is put in positions except D, a signal is sent from the park/neutral position switch to the ECU. When this signal is input during cruise control driving, the ECU cancels the cruise control.

WIRING DIAGRAM

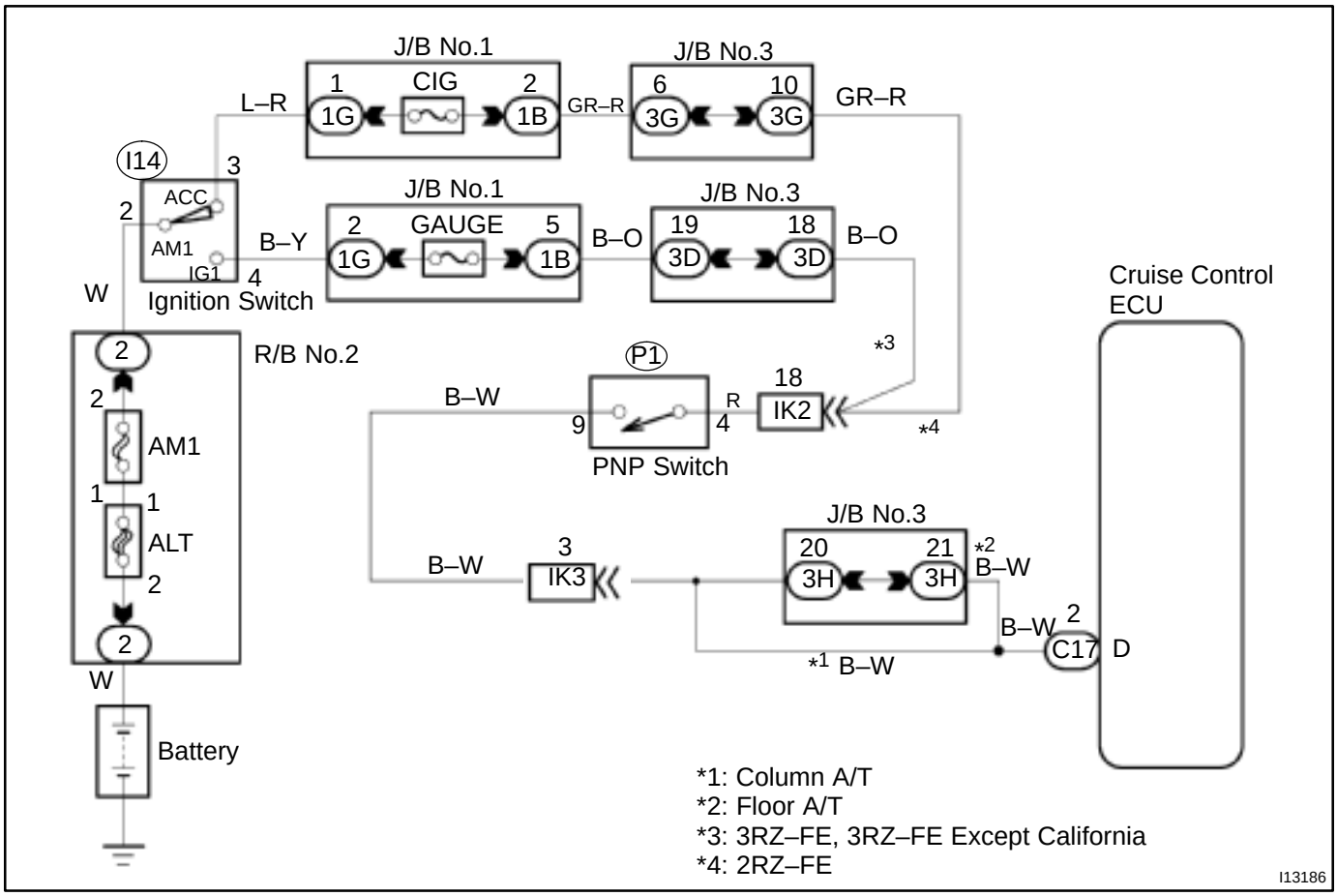

INSPECTION PROCEDURE

1	**Check starter operation.**

CHECK:

Check that the starter operates normally and that the engine starts.

NG → **Proceed to engine troubleshooting. (See page DI–1).**

OK

2	**Input signal check.**

Input Signal	Indicator Light Blinking Pattern
Turn PNP switch OFF (Shift to positions except D)	Light: ON — SW ON; OFF — SW OFF

PREPARATION:

See input signal check on page DI–559.

CHECK:

Check the indicator light when shifting into positions except D.

OK:

The indicator light goes off when shifting into positions except D.

OK → **Proceed to next circuit inspection shown on problem symptoms table (See page DI–568).**

NG

3	Check voltage between terminal D of cruise control ECU and body ground.

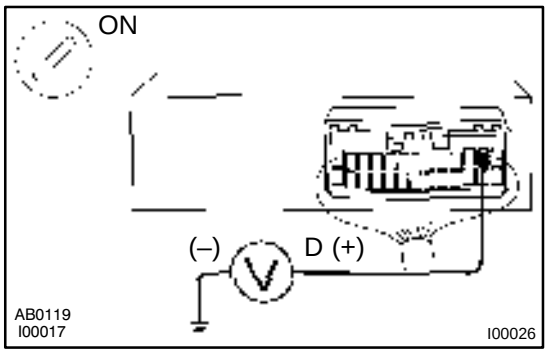

PREPARATION:
Turn ignition switch ON.
CHECK:
Measure voltage between terminal D of cruise control ECU connector and body ground when shifting into D position and other positions.
OK:

Shift Position	Voltage
D position	10 – 14 V
Other positions	Below 1 V

OK → **Proceed to next circuit inspection shown on problem symptoms table (See page DI–568).**

NG

4	Check harness and connector between PNP switch and cruise control ECU (See page IN–28).

NG → **Repair or replace harness or connector.**

OK

Check and replace cruise control ECU (See page IN–28).

DI0NA–03

Stop Light Switch Circuit

CIRCUIT DESCRIPTION

When the brake pedal is on depressed, battery positive voltage normally applies through the STOP fuse and stop light switch to terminal STP– of the ECU, and the ECU turns the cruise control off.
A fail–safe function is provided so that cancel functions normally, even if there is a malfunction in the stop light signal circuit.
If the harness connected to terminal STP– has an open circuit, terminal STP– will have battery positive voltage and the cruise control will be turned off.
Also, when the brake is on, the magnetic clutch is cut mechanically by the stop light switch, turning the cruise control off. (See page DI–572 for operation of the magnetic clutch)

WIRING DIAGRAM

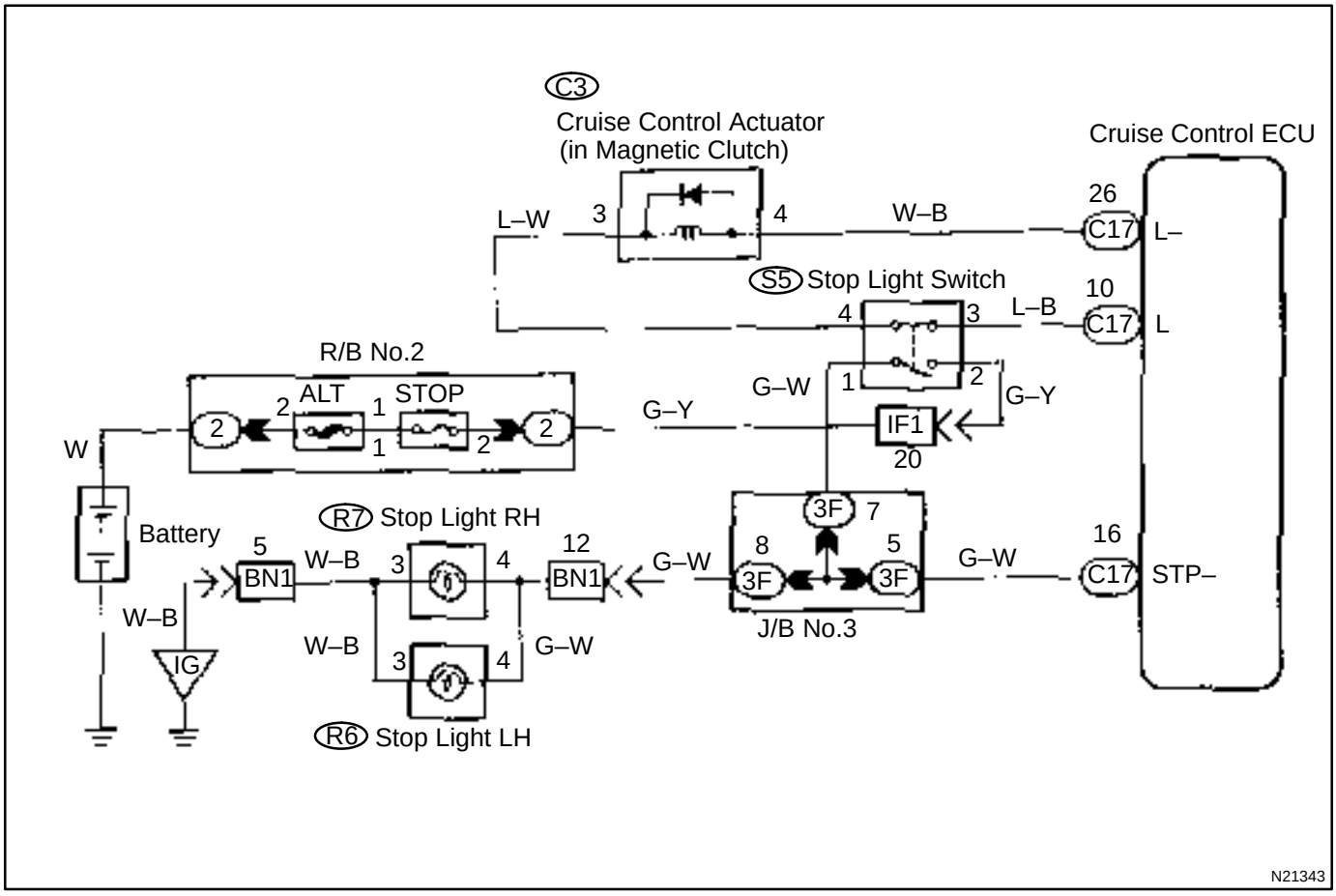

INSPECTION PROCEDURE

1	**Check operation of stop light.**

CHECK:

Check that stop light comes on when brake pedal is depressed, and turns off when brake pedal is released.

NG → **Check stop light system.**

OK

2	**Input signal check.**

Input Signal	Indicator Light Blinking Pattern
Stop light switch ON	Light: ON (SW OFF) / OFF (SW ON)

CHECK:

(a) See input signal check on DI–559.

(b) Check the indicator light when the brake pedal is depressed.

OK:

The indicator light goes off when the brake pedal is depressed.

OK → **Proceed to next circuit inspection shown on problem symptoms table (See page DI–568).**

NG

3	Check voltage between terminal STP– of cruise control ECU connector and body ground.

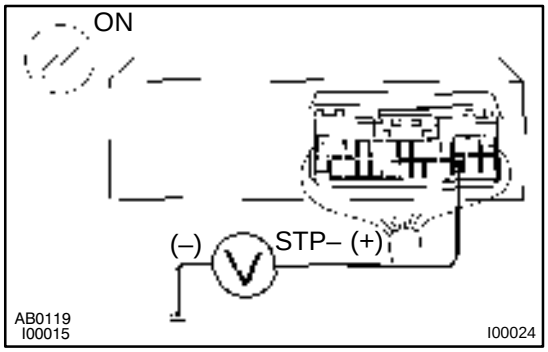

PREPARATION:

Remove cruise control ECU with connectors still connected.

CHECK:

(a) Turn ignition switch ON.

(b) Measure voltage between terminal STP– of cruise control ECU connector and body ground, when the brake pedal is depressed and released.

OK:

Brake pedal position	Voltage
Depressed	10 – 14 V
Released	Below 1 V

OK → **Proceed to next circuit inspection shown on problem symptoms table (See page DI–568).**

NG

4	Check for open in harness and connectors between terminal STP– of cruise control ECU and stop light switch (See page IN–28).

NG → **Repair or replace harness or connector.**

OK

Check and replace cruise control ECU (See page IN–28).

DI0NJ–03

Diagnosis Circuit

CIRCUIT DESCRIPTION

This circuit sends a signal to the ECU that outputs DTC.

WIRING DIAGRAM

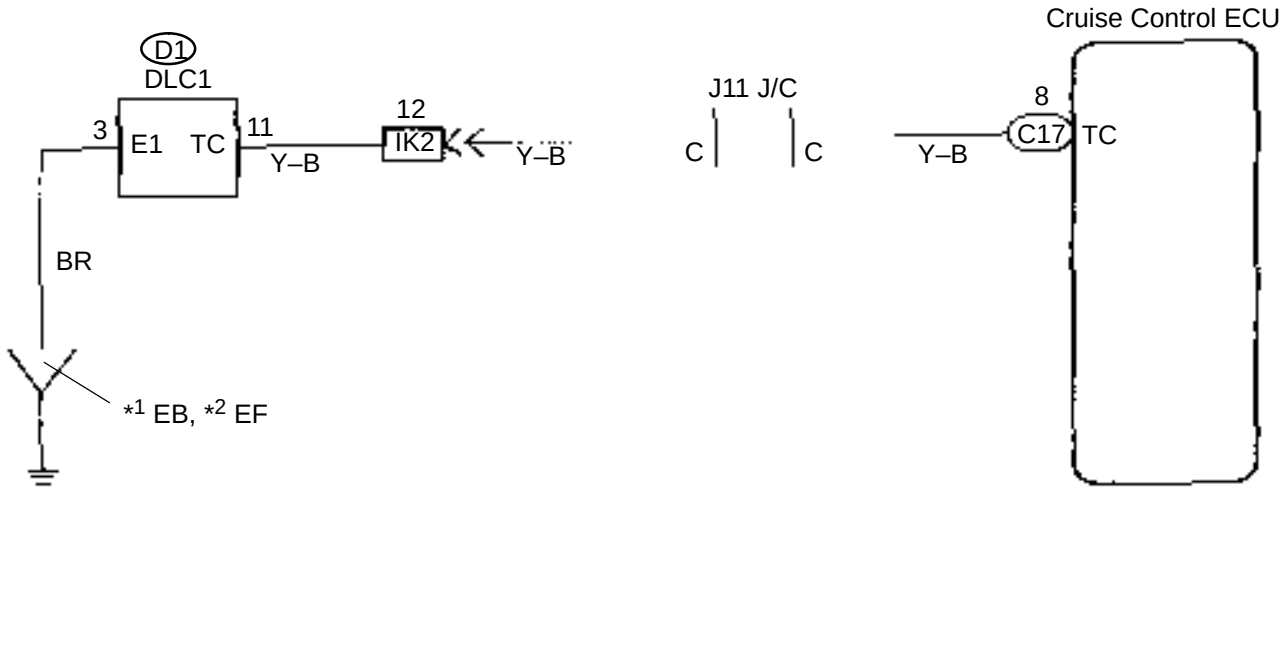

*1: 3RZ–FE Except California / 2RZ–FE Except California
*2: 3RZ–FE, 2RZ–FE

I13184

INSPECTION PROCEDURE

1	**Check voltage between terminals Tc and E_1 of DLC1.**

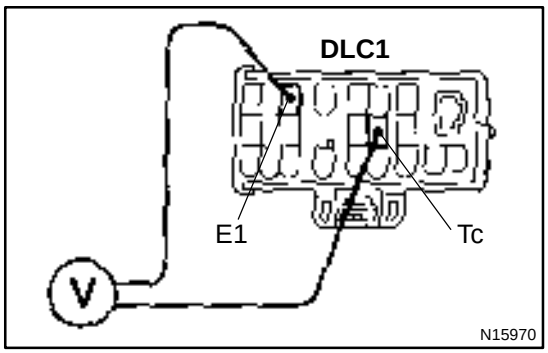

CHECK:

(a) Turn ignition switch ON.

(b) Measure voltage between terminals Tc and E_1 of DLC1.

OK:

Voltage: 10 – 14 V

OK → **Proceed to next circuit inspection shown on problem symptoms table (See page DI–568).**

NG

2	**Check harness and connector between cruise control ECU and DLC1, DLC1 and body ground (See page IN–28).**

NG → **Repair or replace harness or connector.**

OK

Check and replace cruise control ECU (See page IN–28).

DI183–01

CUSTOMER PROBLEM ANALYSIS CHECK

CRUISE CONTROL SYSTEM Check Sheet

Inspector's name: _____

Customer's Name		**Registration No.**	
		Registration Year	
		Frame No.	
Date of Vehicle Brought in	/ /	**Odometer Reading**	**km Mile**

Condition of Problem Occurrence	**Date of Problem Occurrence**	/ /
	How Often does Problem Occur?	☑ Continuous ☑ Intermittent (Times a day)
	Vehicle Speed when Problem Occurred	**km Mile**

Symptoms	☑ Auto cancel occurs	● Driving condition ☐ City driving ☐ Freeway ☐ Up hill ☐ Down hill ● After cancel occurred, did the driver activate cruise control again? ☐ Yes ☐ No
	☐ Cancel does not occur	☐ With brake ON ☐ Except D position shift ☐ At 40 km/h (25 mph) or less ☐ When control SW turns to CANCEL position
	☐ Cruise control malfunction	☐ Slip to acceleration side ☐ Slip to deceleration side ☐ Hunting occurs ☐ O/D cut off does not occur ☐ O/D does not return
	☐ Switch malfunction	☐ SET ☐ ACCEL ☐ COAST ☐ RESUME ☐ CANCEL
	☐	☐ Remains ON ☐ Does not light up ☐ Blinking

DTC Check	**1st Time**	☐ Normal Code ☐ Malfunction Code (Code)
	2nd Time	☐ Normal Code ☐ Malfunction Code (Code)

DI185–01

DIAGNOSTIC TROUBLE CODE CHART

If a malfunction code is displayed during the diagnostic trouble code check, check the circuit listed for that code in the table below and proceed to the appropriate page.

DTC No. (See Page)	Detection Item	Trouble Area
11 (DI–570)	Actuator Motor Circuit	• Cruise control actuator motor • Harness or connector between actuator motor and ECU • ECU
12 (DI–572)	Actuator Magnetic Clutch Circuit	• Cruise control magnetic clutch • Harness or connector between ECU and magnetic clutch, magnetic clutch and body ground • ECU
14 (DI–575)	Actuator Motor Circuit	• Cruise control actuator motor • Harness or connector between actuator motor and ECU • ECU
15 (DI–570)	Actuator Motor Circuit	• Cruise control actuator motor • Harness or connector between actuator motor and ECU • ECU
21 (DI–577)	Vehicle Speed Sensor Circuit	• Vehicle speed sensor • ECM • Combination meter • Harness or connector between vehicle speed sensor and ECM, ECM and combination meter, combination meter and ECU • ECU
23 (DI–580)	Vehicle Speed Sensor Circuit	• Vehicle speed sensor • Harness or connector (SPD) • ECU
32 (DI–581)	Control Switch Circuit (Cruise Control Switch)	• Cruise control switch • Harness or connector between control switch and ECU • ECU
41	Cruise Control ECU	• Cruise control ECU
42	Source voltage drop	• Power source

CRUISE CONTROL SYSTEM (DENSO Made)

DI182–01

HOW TO PROCEED WITH TROUBLESHOOTING

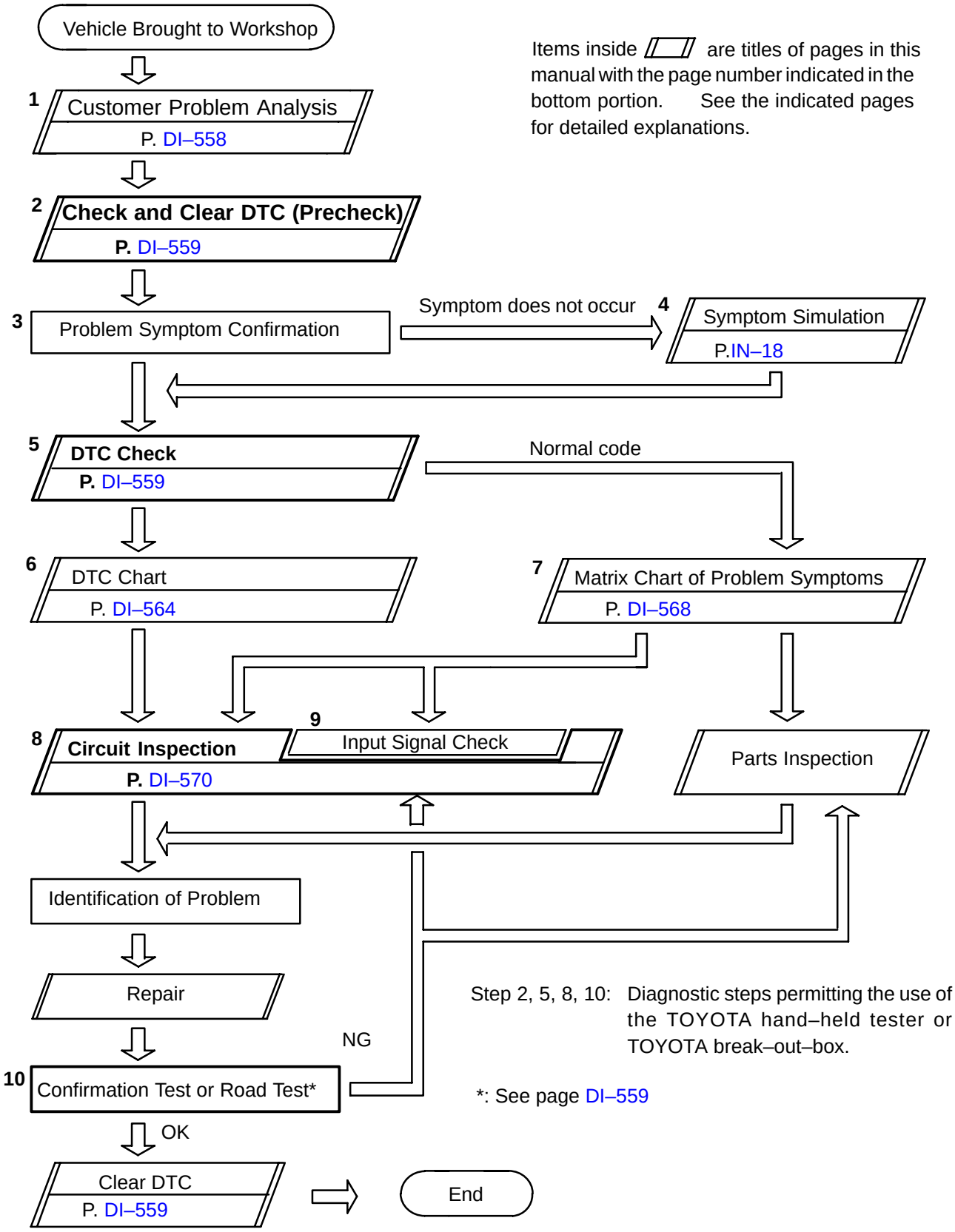

Items inside ▱ are titles of pages in this manual with the page number indicated in the bottom portion. See the indicated pages for detailed explanations.

Step 2, 5, 8, 10: Diagnostic steps permitting the use of the TOYOTA hand–held tester or TOYOTA break–out–box.

*: See page DI–559

DI186–01

PARTS LOCATION

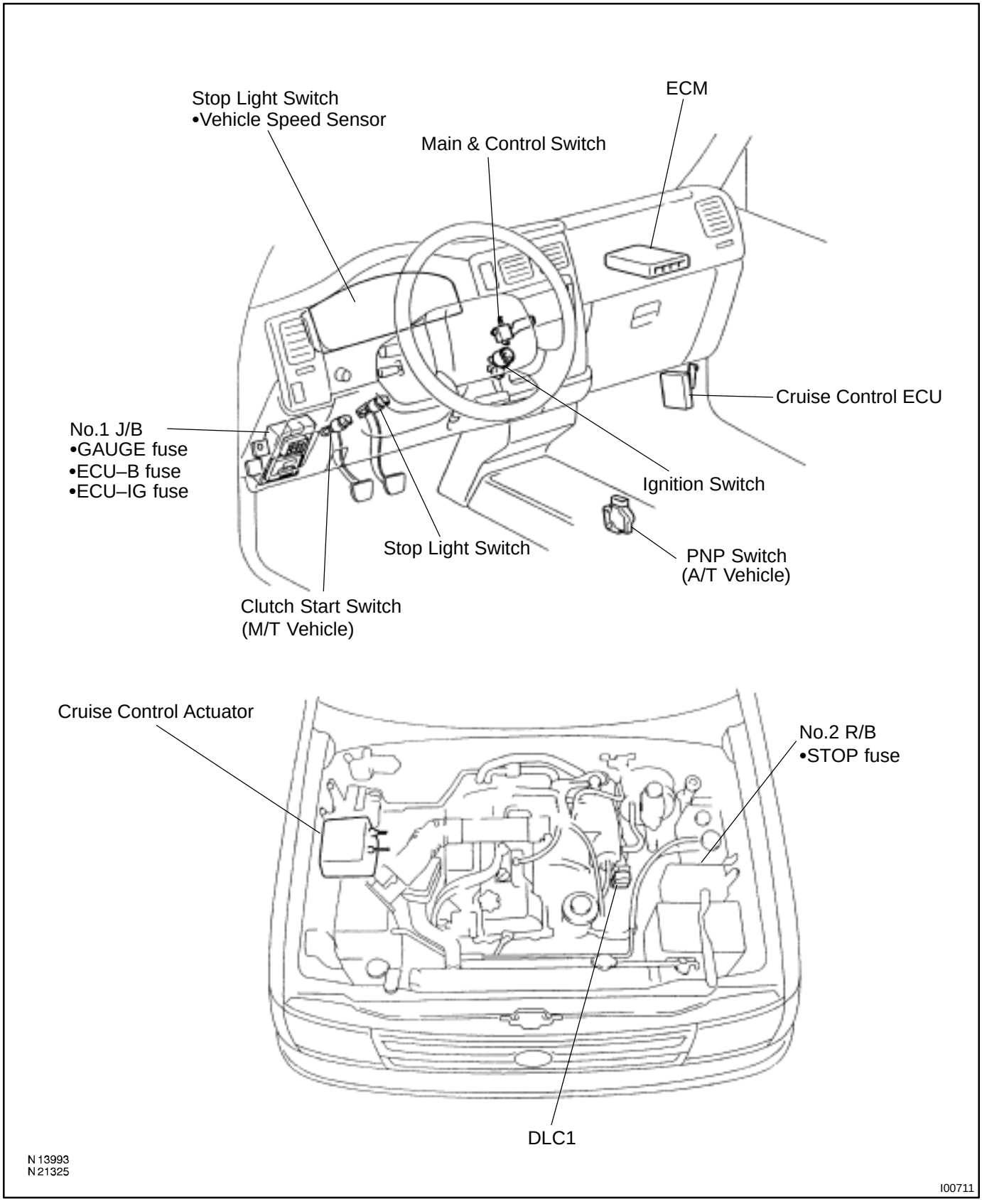

DI184–01

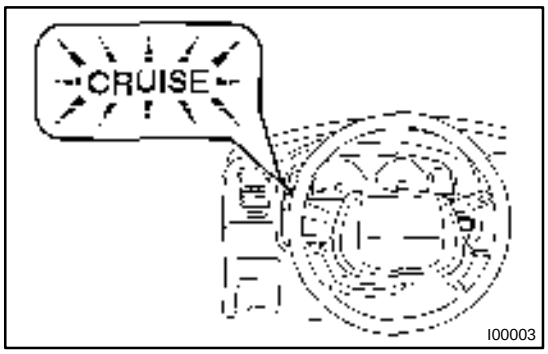

PRE–CHECK

1. DIAGNOSIS SYSTEM

(a) Check the indicator.

(1) Turn the ignition switch to ON.

(2) Check that the CRUISE MAIN indicator light comes on when the cruise control main switch is turned on, and that the indicator light goes off when the main switch is turned OFF.

HINT:

If the indicator check result is not normal, proceed to trouble-shooting (See page BE–2) for the combination meter section.

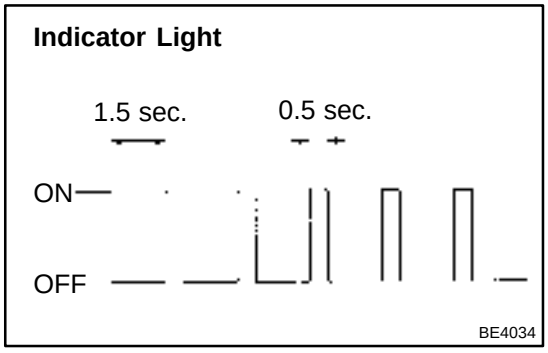

(b) Check the DTC.

HINT:

If a malfunction occurs in the No. 1 vehicle speed sensor or actuator, etc. during cruise control driving, the ECU actuates AUTO CANCEL of the cruise control and turns on and off the CRUISE MAIN indicator light to inform the driver of a malfunction. At the same time, the malfunction is stored in memory as a DTC.

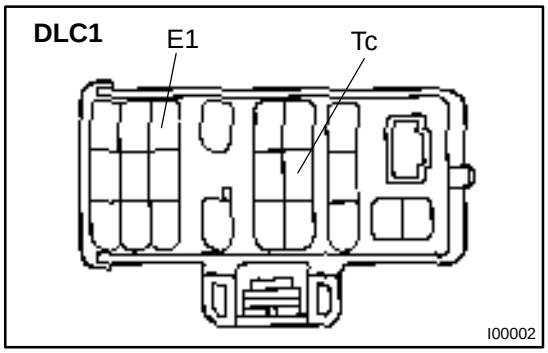

(c) Using diagnosis check wire, check the output of DTC.

(1) Turn the ignition switch ON.

(2) Using SST, connect terminals Tc and E_1 of DLC1.

SST 09843–18020

(3) Read the DTC on the CRUISE MAIN indicator light.

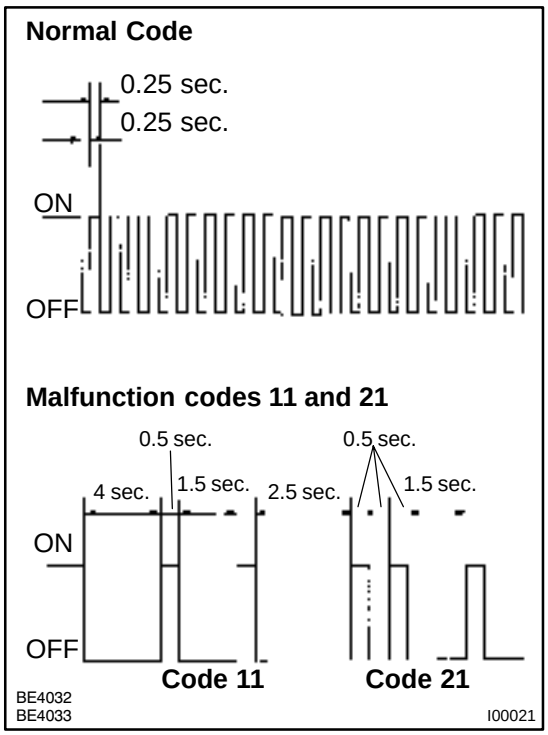

HINT:

If the DTC is not output, inspect the diagnosis circuit (See page DI–605).

As an example, the blinking patterns for codes; normal, 11 and 21 are shown in the illustration.

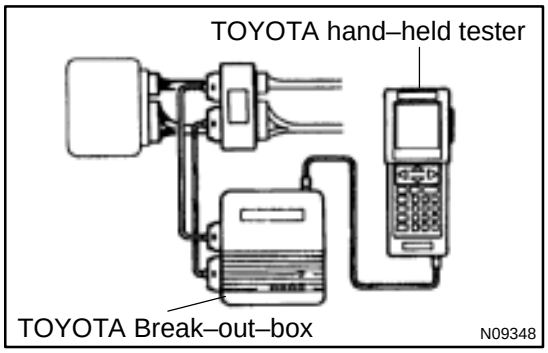

2. ECU TERMINAL VALUES MEASUREMENT BY USING TOYOTA BREAK–OUT–BOX AND TOYOTA HAND–HELD TESTER

(a) Hook up the TOYOTA break–out–box and TOYOTA hand–held tester to the vehicle.

(b) Read the ECU input/output values by following the prompts on the tester screen.

(c) Please refer to the TOYOTA hand–held tester having a ”Snapshot” function. This records the measured data and is effective in the diagnosis of intermittent problems.

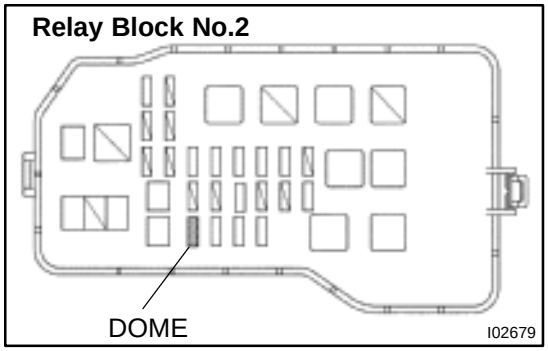

3. DTC CLEARANCE

(a) After completing repairs, the diagnostic trouble code retained in memory can be cleared by removing the DOME fuse for 10 seconds or more, with the ignition switch off.

(b) Check that the normal code is displayed after connecting the fuse.

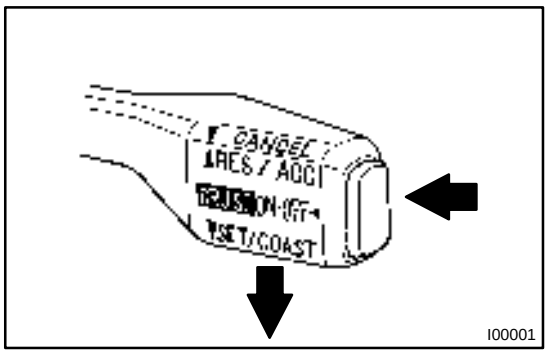

4. PROBLEM SYMPTOM CHECK (ROAD TEST)

(a) Inspect the SET switch.
- (1) Push the main switch ON.
- (2) Drive at a desired speed (40 km/h (25 mph) or higher).
- (3) Press the control switch to the SET/COAST.
- (4) After releasing the switch, check that the vehicle cruises at the desired speed.

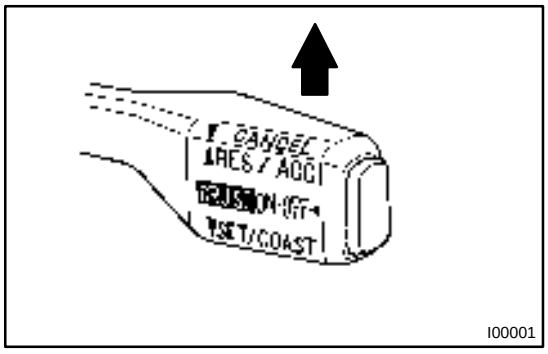

(b) Inspect the ACCEL switch.
- (1) Push the main switch ON.
- (2) Drive at a desired speed (40 km/h (25 mph) or higher).
- (3) Check that the vehicle speed is increases while the control switch is turned to RES/ACC, and that the vehicle cruises at the set speed when the switch is released.
- (4) Momentarily raise the control switch upward to the RES/ACC position and then immediately release it. Check that the vehicle speed increases by about 1.5 km/h (Tap–up function).

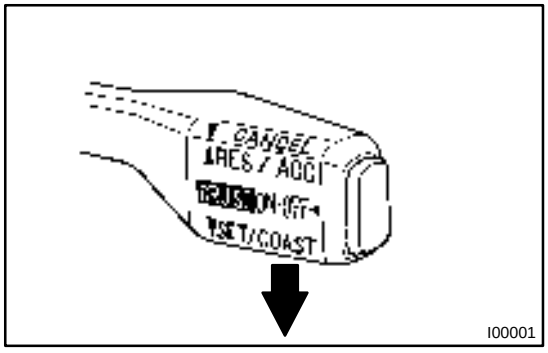

(c) Inspect the COAST.
- (1) Push the main switch ON.
- (2) Drive at a desired speed (40 km/h (25 mph) or higher).
- (3) Check that the vehicle speed is decreases while the control switch is turned to SET/COAST, and the vehicle cruises at the set speed when the switch is released.
- (4) Momentarily pull the control switch down to SET/COAST, and then immediately release it. Check that the vehicle speed decreases by about 1.5 km/h (Tap–down function).

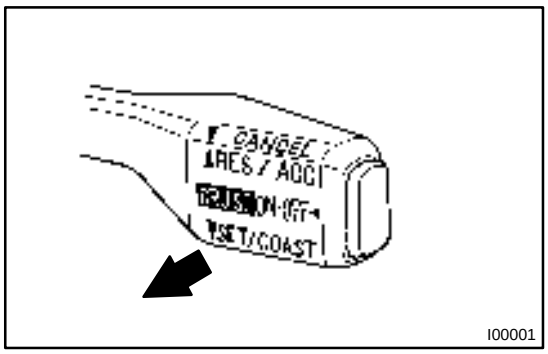

(d) Insepct the CANCEL switch.
(1) Push the main switch ON.
(2) Drive at a desired speed (40 km/h (25 mph) or higher).
(3) When operating one of the following operations, check that the cruise control system is cancelled and that the normal driving mode is reset.
- Depress the brake pedal
- Depress the clutch pedal (M/T)
- Shift to except D position (A/T)
- Turn the main switch OFF
- Pull the cruise control switch to CANCEL

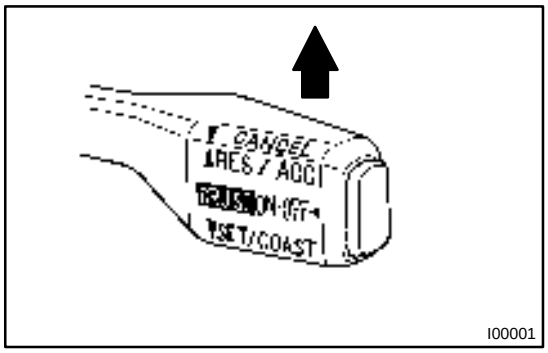

(e) Inspect the RESUME switch.
(1) Push the main switch ON.
(2) Drive at a desired speed (40 km/h (25 mph) or higher).
(3) When operating one of the following operations, check that the cruise control system is cancelled and that the normal driving mode is reset.
- Depress the brake pedal
- Depress the clutch pedal (M/T)
- Shift to positions except D (A/T)
- Turn the main switch OFF
- Pull the cruise control switch to CANCEL

(4) After the control switch is turned to RES/ACC at the driving speed of more than 40 km/h (25 mph), check that the vehicle restores the speed prior to the cancellation.

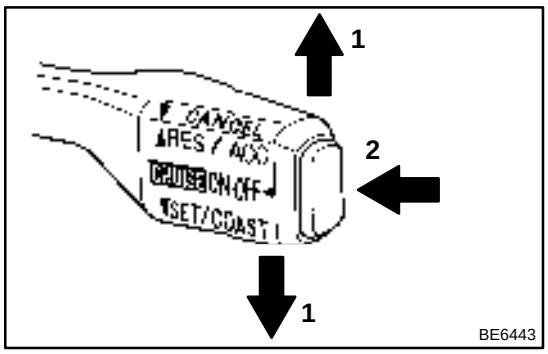

5. INPUT SIGNAL CHECK

HINT:

(1) For check No.1 ~ No.2:

Turn the ignition switch ON.

(2) For check No.3:

- Turn ignition switch ON.
- Shift to D position.

(3) For check No.4:

- Jack up the vehicle.
- Start the engine.
- Shift to D position.

(a) Press the control switch to SET/COAST or RES/ACC position and hold it down or hold it up ”1”.

(b) Push the main switch ON ”2”.

(c) Check that the CRUISE MAIN indicator light blinks twice or 3 times repeatedly after 3 seconds.

(d) Turn the SET/COAST or RES/ACC switch OFF.

(e) Operate each switch as listed in the table below.

(f) Read the blinking pattern of the CRUISE MAIN indicator light.

(g) After performing the check, turn the main switch OFF.

HINT:

When 2 or more signals are input to the ECU, the lowest numbered code will be displayed first.

No.	Operation Method	CRUISE MAIN Indicator Light Blinking Pattern	Diagnosis
1	Turn SET/COAST switch ON	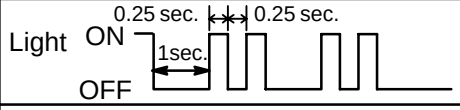	SET/COAST switch circuit is normal
2	Turn RES/ACC switch ON		RES/ACC switch circuit is normal
3	Turn CANCEL switch ON	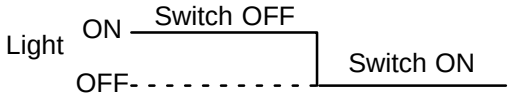	CANCEL switch circuit is normal
	Turn stop light switch ON Depress brake pedal		Stop light switch circuit is normal
	Turn Park/Neutral Position switch OFF (Shift to except D position)	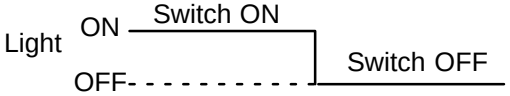	Park/Neutral Position switch circuit is normal
	Turn clutch switch OFF (Depress clutch pedal)		Clutch switch circuit is normal
4	Drive at about 40 km/h (25 mph)or higher	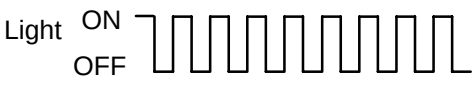	Vehicle Speed Sensor is normal
	Drive at about 40 km/h (25 mph) or below	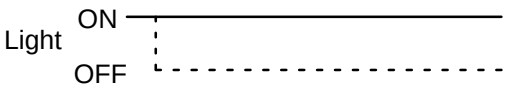	

DI188–01

PROBLEM SYMPTOMS TABLE

Symptom	Suspect Area	See page
• Cruise control system does not set. • Cruise control system does not operate.	Input signal check No.4: OK 1. ECU Power Source Circuit 2. Wire Harness 3. Cruise Control Main Switch Circuit 4. Cruise Control Switch Circuit 5. Stop Light Switch Circuit 6. PNP Switch or Clutch Switch Circuit 7. Cable 8. Cruise Control Actuator Circuit 9. Cruise Control ECU Input signal check No.4: NG 1. Vehicle Speed Sensor Circuit 2. Cruise Control ECU	 DI–598 DI–601 DI–581 DI–584 DI–592 DI–595 DI–607 DI–570 IN–28 DI–577 IN–28
Indicator light does not light up.	1. Wire Harness 2. Indicator Light Circuit 3. Cruise Control ECU	 DI–603 IN–28
Vehicle speed drop when the cruise control switch turned to SET.	1. Cable 2. ECU Power Source Circuit 3. Throttle Position Sensor (IDL) Circuit 4. Cruise Control Actuator Circuit 5. Cruise Control ECU	DI–607 DI–598 DI–587 DI–570 IN–28
Set speed deviates on high or low side.	Input signal check No.4: OK 1. Vehicle Speed Sensor Circuit 2. Cable 3. ECU Power Source Circuit 4. Cruise Control Actuator Circuit 5. Cruise Control ECU Input signal check No.4: NG 1. Cruise Control ECU	 DI–577 DI–607 DI–598 DI–570 IN–28 IN–28
Vehicle speed fluctuates when cruise control switch is turned SET.	1. Vehicle Speed Sensor Circuit 2. Cable 3. Throttle Position Sensor Circuit 4. ECT Communecation Circuit 5. Cruise Control Actuator Circuit 6. Cruise Control ECU	DI–577 DI–607 DI–587 DI–589 DI–570
Acceleration response is sluggish when cruise control switch is turned ”ACCEL” or ”RESUME”.	Input signal check No.4: OK 1. Cable 2. Vehicle Speed Sensor Circuit 3. Cruise Control Actuator Circuit 4. Cruise Control ECU Input signal check No.4: NG 1. Cruise Control Switch Circuit 2. Cruise Control ECU	 DI–607 DI–577 DI–570 IN–28 DI–581 IN–28
Set speed does not cancel when brake pedal depressed.	Input signal check No.3: OK 1. Cruise Control ECU Input signal check No.3: NG 1. Stop Light Switch Circuit 2. Cruise Control ECU	 IN–28 DI–584 IN–28
Cruise control does not cancel when transmission is shifted to ranges except D. (A/T)	Input signal check No.3: OK 1. Cruise Control ECU Input signal check No.3: NG 1. PNP Switch Circuit 2. Cruise Control ECU	 IN–28 DI–592 IN–28

Cruise control does not cancel when clutch pedal is depressed.	Input signal check No.3: OK 1. Cruise Control ECU Input signal check No.3: NG 1. Clutch Switch Circuit 2. Cruise Control ECU	 IN–28 DI–595 IN–28
Cruise control does not cancel when cruise control switch is turned to CANCEL.	Input signal check No.3: OK 1. Cruise Control ECU Input signal check No.3: NG 1. Cruise Control Switch Circuit 2. Cruise Control ECU	 IN–28 DI–581 IN–28
Vehicle Speed does not decrease when cruise control switch is turned to COAST.	Input signal check No.1: OK 1. Cruise Control Actuator Circuit 2. Cable 3. Vehicle Speed Sensor Circuit 4. Cruise Control ECU Input signal check No.1: NG 1. Cruise Control Switch Circuit 2. Cruise Control ECU	 DI–570 DI–607 DI–577 IN–28 DI–581 IN–28
Vehicle speed does not accelerate when cruise control switch is turned to ACCEL.	Input signal check No.2: OK 1. Cruise Control Actuator Circuit 2. Cable 3. Vehicle Speed Sensor Circuit 4. Cruise Control ECU Input signal check No.2: NG 1. Cruise Control Switch Circuit 2. Cruise Control ECU	 DI–570 DI–607 DI–577 DI–581 IN–28
Vehicle speed does not return to memorized speed when cruise control switch is turned to RESUME.	Input signal check No.2: OK 1. Cruise Control Actuator Circuit 2. Cable 3. Vehicle Speed Sensor Circuit 4. Cruise Control ECU Input signal check No.2: NG 1. Cruise Control Switch Circuit 2. Cruise Control ECU	 DI–570 DI–607 DI–577 IN–28 DI–581 IN–28
Speed can be set below about 40 km/h (25 mph).	Input signal check No.4: OK 1. Cruise Control ECU Input signal check No.4: NG 1. Vehicle Speed Sensor Circuit 2. Cruise Control ECU	 IN–28 DI–577 IN–28
Cruise control does not cancel when speed is less than 40 km/h (25 mph).	Input signal check No.4: OK 1. Cruise Control Actuator Circuit 2. Cruise Control ECU Input signal check No.4: NG 1. Vehicle Speed Sensor Circuit 2. Cruise Control ECU	 DI–570 IN–28 DI–577 IN–28

DI187–02

TERMINALS OF ECU

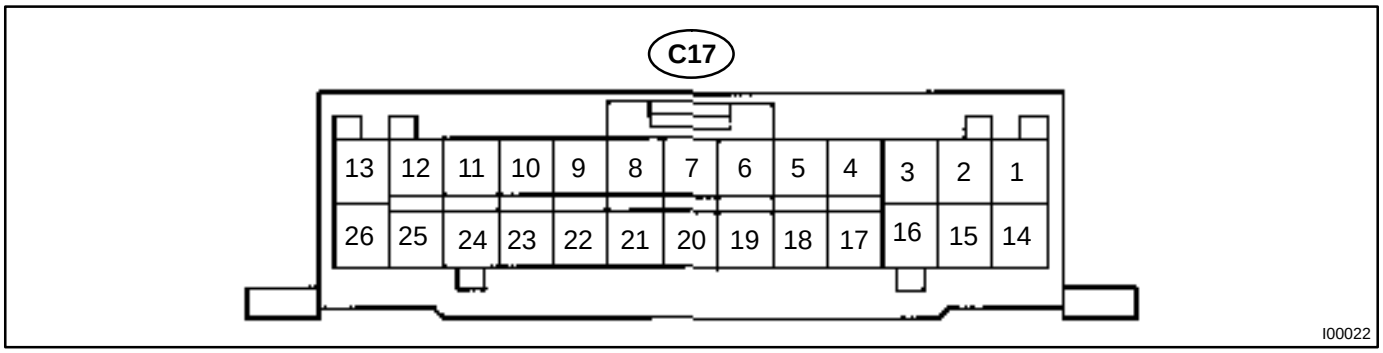

Symbols (Terminals No.)	Wiring Color	Condition	STD Voltage (V)
D ↔ GND (C17–2 ↔ C17–13)	B–W ↔ W–B	M/T: Depress clutch pedal A/T: Shift to positions except D	Below 1 V
		M/T: Release clutch pedal A/T: Shift to D position	10 – 16 V
Pi ↔ GND (C17–7 ↔ C17–13)	B–Y ↔ W–B	Ignition switch ON Cruise control main switch ON	Below 1.2 V
		Ignition switch ON Cruise control main switch OFF	10 – 16 V
TC ↔ GND (C17–8 ↔ C17–13)	Y–B ↔ W–B	Ignition switch ON	10 – 16 V
		Ignition switch ON Connect terminals TC and E1 of diagnostic check connector	Below 1 V
OD ↔ GND (C17–9 ↔ C17–13)	R–Y ↔ W–B	During cruise control driving OD switch ON.	10 – 16 V
		During cruise control driving OD switch OFF (3rd driving)	Below 1 V
L ↔ GND (C17–10 ↔ C17–13)	L–B ↔ W–B	During cruise control driving	9 – 15 V
		Except during cruise control driving	Below 1 V
MC ↔ GND (C17–11 ↔ C17–13)	LG–B ↔ W–B	During cruise control driving COAST switch hold ON	9 – 15 V
		During cruise control driving ACC switch hold ON	Below 1 V
MO ↔ GND (C17–12 ↔ C17–13)	R–W ↔ W–B	During cruise control driving ACC switch hold ON	9 – 15 V
		During cruise control driving COAST switch hold ON	Below 1 V
GND ↔ Body Ground (C17–13 ↔ Body Ground)	W–B ↔ Body Ground	Constant	Below 1 V
B ↔ GND (C17–14 ↔ C17–13)	Y–R ↔ W–B	Ignition switch ON	10 – 16 V
BATT ↔ GND (C17–15 ↔ C17–13)	L–R ↔ W–B	Constant	10 – 16 V
STP– ↔ GND (C17–16 ↔ C17–13)	G–W ↔ W–B	Depress brake pedal	10 – 16 V
		Release brake pedal	Below 1 V

CCS ↔ GND (C17–18 ↔ C17–13)	G–Y ↔ W–B	Ignition switch ON	10 – 16 V
		Ignition switch ON CANCEL switch hold ON	4.3 – 8.7 V
		Ignition switch ON SET/COAST switch hold ON	2.6 – 6.2 V
		Ignition switch ON RES/ACC switch hold ON	0.9 – 3.6 V
CMS ↔ GND (C17–19 ↔ C17–13)	G–B ↔ W–B	Ignition switch ON Main switch ON	Below 1 V
		Ignition switch ON Main switch OFF	10 – 16 V
SPD ↔ GND (C17–20 ↔ C17–13)	G–O ↔ W–B	Ignition switch ON	Below 1.5V or 4.7 ~ 16V
		During driving	3 – 7 V
IDL ↔ GND (C17–21 ↔ C17–13)	LG–R ↔ W–B	Ignition switch ON Throttle valve fully closed	Below 1 V
		Ignition switch ON Throttle valve fully opened	10 – 16 V
ECT ↔ GND (C17–22 ↔ C17–13)	LG ↔ W–B	During driving Gear position O/D	Below 1 V
		During driving Gear position 3rd	10 – 16 V
L– ↔ GND (C17–26 ↔ C17–13)	W–B ↔ W–B	Constant	Below 1 V

DI0NS–06

CIRCUIT INSPECTION

DTC	12	Actuator Circuit

CIRCUIT DESCRIPTION

This circuit turns on the magnetic clutch inside the actuator during cruise control operation according to the signal from the ECU. If a malfunction occurs in the actuator or speed sensor, etc. during cruise control operation, the rotor shaft between the motor and control plate is released.

When the brake pedal is depressed, the stop light switch turns on, supplying electrical power to the stop light. Power supply to the magnetic clutch is mechanically cut and the magnetic clutch is turned OFF.

When driving downhill, if the vehicle speed exceeds the set speed by 15 km/h (6 mph) above the set speed, then cruise control at the set speed is resumed.

DTC No.	Detection Item	Trouble Area
12	• Short in actuator and ECU circuit • Open in actuator and ECU circuit	• Connector of cruise control actuator and ECU • STOP fuse and stop light switch • Cruise control actuator and ECU

WIRING DIAGRAM

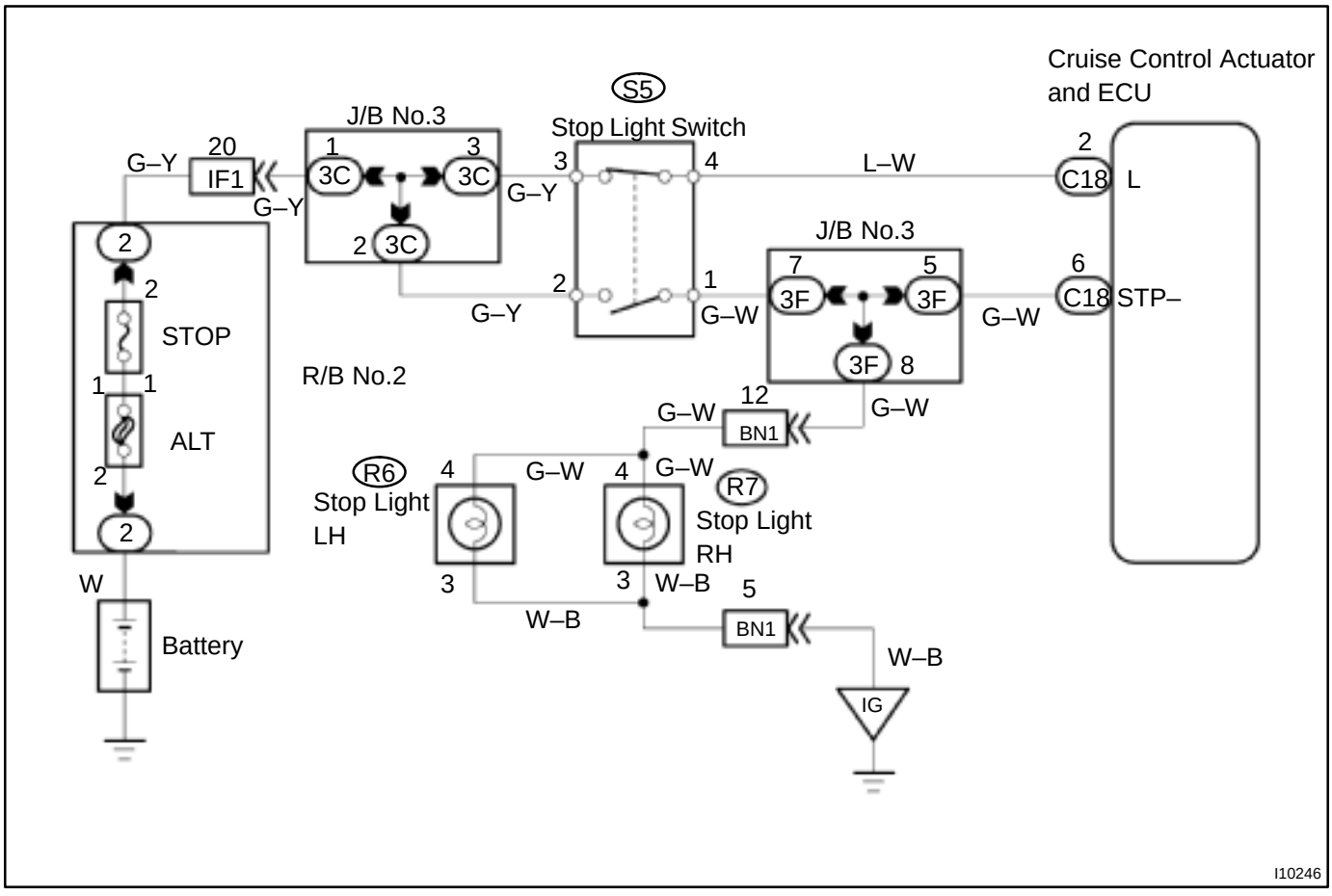

INSPECTION PROCEDURE

1	Check STOP fuse.

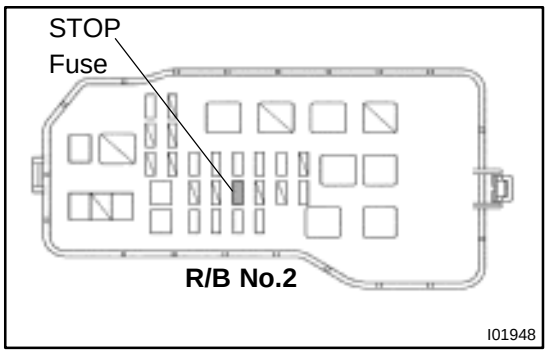

PREPARATION:
Remove STOP fuse from Relay Block No.2.
CHECK:
Check fuse continuity.
OK:
There is continuity.

NG → **Replace STOP fuse.**

OK

2	Check stop light switch.

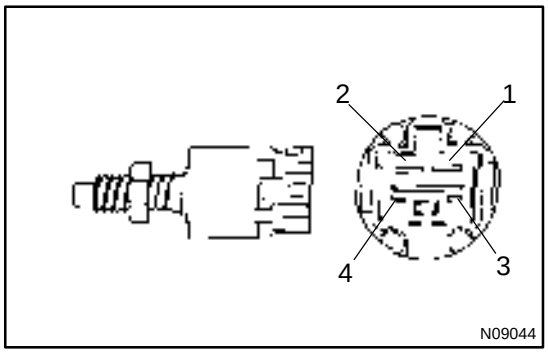

PREPARATION:
Disconnect stop light switch connector.
CHECK:
Check continuity between terminals.
OK:

Switch position	Continuity
Switch pin free (Brake pedal depressed)	1 – 2
Switch pin pushed in (Brake pedal released)	3 – 4

NG → **Replace stop light switch.**

OK

3	**Check harness and connector between actuator and cruise control actuator (See page IN–28).**

NG → **Repair or replace harness or connector.**

OK

Check and replace cruise control actuator and ECU (See page IN–28).

DI0NS–06

CIRCUIT INSPECTION

DTC	12	Actuator Circuit

CIRCUIT DESCRIPTION

This circuit turns on the magnetic clutch inside the actuator during cruise control operation according to the signal from the ECU. If a malfunction occurs in the actuator or speed sensor, etc. during cruise control operation, the rotor shaft between the motor and control plate is released.

When the brake pedal is depressed, the stop light switch turns on, supplying electrical power to the stop light. Power supply to the magnetic clutch is mechanically cut and the magnetic clutch is turned OFF.

When driving downhill, if the vehicle speed exceeds the set speed by 15 km/h (6 mph) above the set speed, then cruise control at the set speed is resumed.

DTC No.	Detection Item	Trouble Area
12	• Short in actuator and ECU circuit • Open in actuator and ECU circuit	• Connector of cruise control actuator and ECU • STOP fuse and stop light switch • Cruise control actuator and ECU

WIRING DIAGRAM

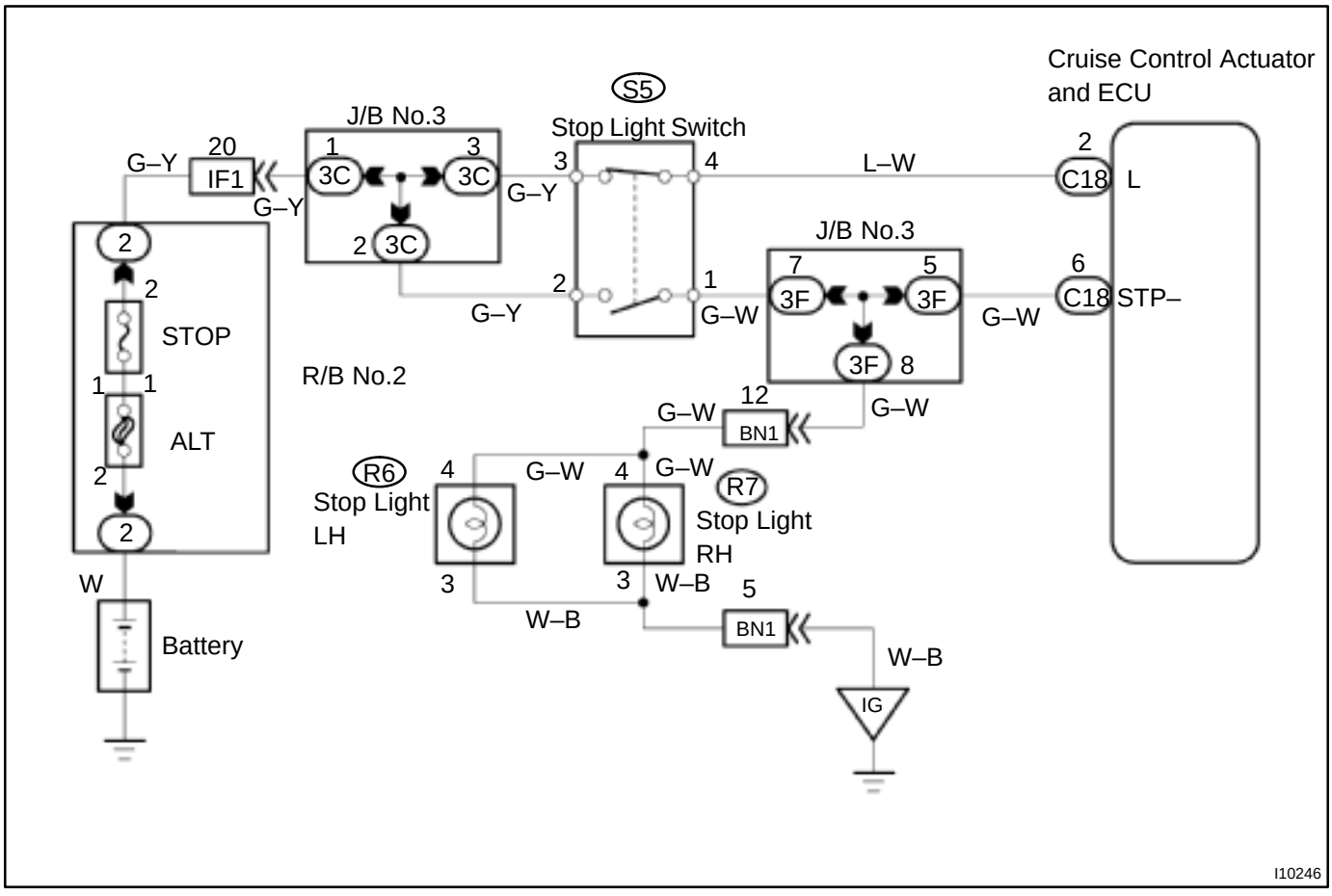

INSPECTION PROCEDURE

1	Check STOP fuse.

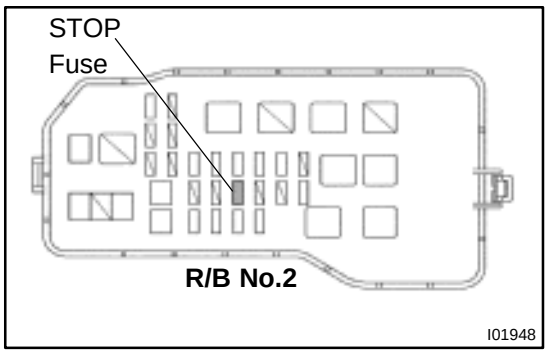

PREPARATION:
Remove STOP fuse from Relay Block No.2.
CHECK:
Check fuse continuity.
OK:
There is continuity.

NG → **Replace STOP fuse.**

OK

2	Check stop light switch.

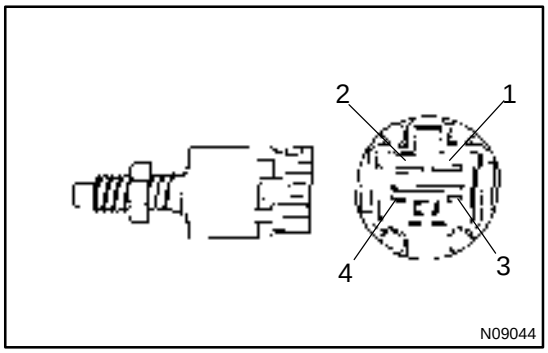

PREPARATION:
Disconnect stop light switch connector.
CHECK:
Check continuity between terminals.
OK:

Switch position	Continuity
Switch pin free (Brake pedal depressed)	1 – 2
Switch pin pushed in (Brake pedal released)	3 – 4

NG → **Replace stop light switch.**

OK

3	**Check harness and connector between actuator and cruise control actuator (See page IN–28).**

NG → **Repair or replace harness or connector.**

OK

Check and replace cruise control actuator and ECU (See page IN–28).

DI0NT–02

DTC	14	Actuator Mechanical Malfunction

CIRCUIT DESCRIPTION

The circuit detects the rotation position of the actuator control plate and sends a signal to the ECU.

DTC No.	Detection Item	Trouble Area
14	• Cruise control actuator motor open and short	• Connector of cruise control actuator and ECU • Cruise control actuator and ECU

INSPECTION PROCEDURE

1	**Check connector of cruise control actuator and ECU (See page IN–28).**

NG → **Repair or replace connector.**

OK

Check and replace cruise control actuator and ECU (See page IN–28).

DI0NU–04

DTC	21	Open in Vehicle Speed Sensor Circuit

CIRCUIT DESCRIPTION

The vehicle speed sensor circuit is sent to cruise control ECU as vehicle speed signal. For each rotation of the shaft, the vehicle speed sensor sends a signal through the combination meter to the cruise control ECU (See the following illustration). The ECU calculates the vehicle speed from this pulse frequency.

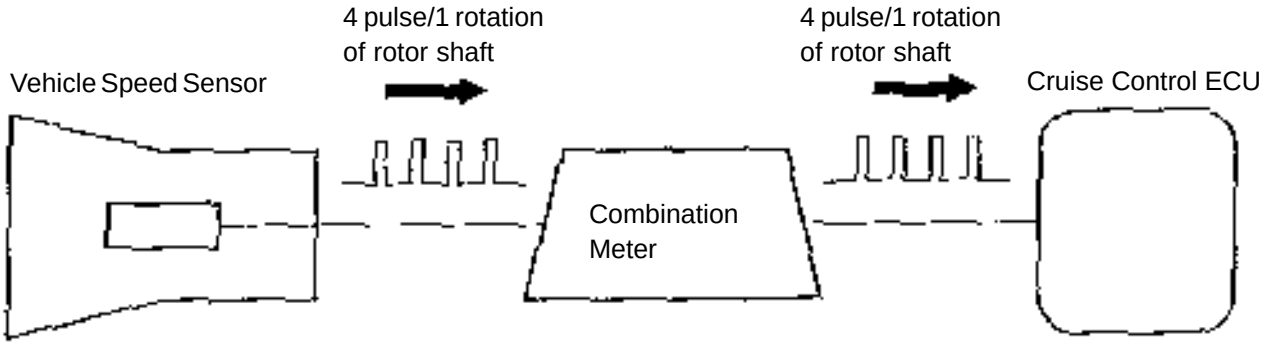

DTC No.	Detection Item	Trouble Area
21	Speed signal is not input to the cruise control ECU while cruise control is set.	• Harness or connector between combination meter and cruise control actuator and ECU • Speed sensor (in combination meter) • Combination meter • Cruise control actuator and ECU

I00736

WIRING DIAGRAM

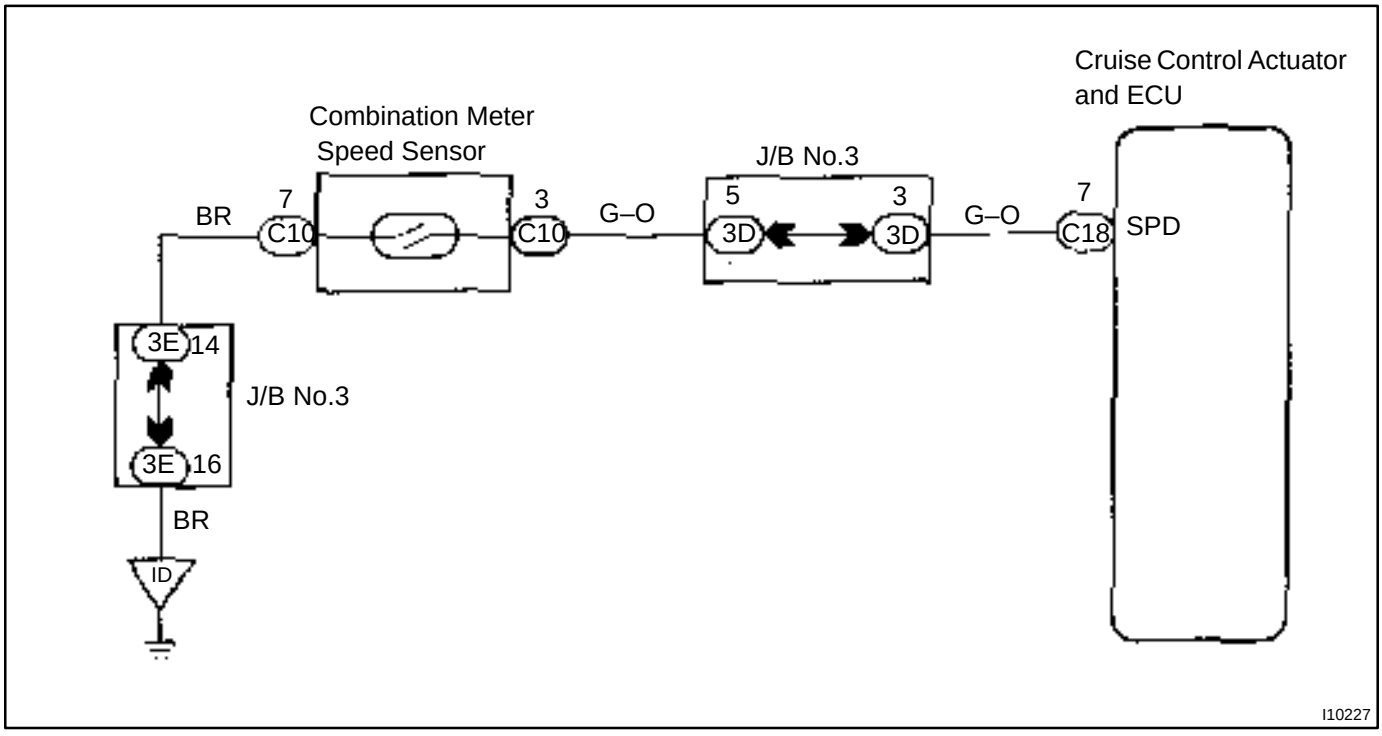

I10227

INSPECTION PROCEDURE

1	**Input signal check.**

Input Signal	Indicator Light Blinking Pattern
Drive at about 40 km/h (25 mph) or below	Light: ON — OFF
Drive at about 40 km/h (25 mph) or higher	Light: ON / OFF (blinking)

CHECK:

(a) See input signal check on page DI–612.

(b) Check indicator light operation when driving with vehicle speed above 40 km/h (25 mph), and with vehicle speed below 40 km/h (25 mph).

OK:

Vehicle speed above 40 km/h (25 mph):
Indicator light blinks

Vehicle speed below 40 km/h (25 mph):
Indicator light stays on

OK → **Check and replace cruise control actuator and ECU (See page IN–28).**

NG

2	**Check harness and connector between combination meter and cruise control actuator and ECU (See page IN–28).**

NG → **Repair or replace harness or connector.**

OK

3	**Check speedometer circuit (See page BE–38).**

NG → **Repair or replace speed sensor or combination meter assembly.**

OK

Check and replace cruise control actuator and ECU (See page IN–28).

DI0NV–02

DTC	23	Vehicle Speed Signal Abnormal

CIRCUIT DESCRIPTION

See page DI–626.

DTC No.	Detection Item	Trouble Area
23	• Actual vehicle speed has dropped either by 16 km/h (10 mph) or more below the set speed, or by 20% or more of the set speed.	• Speed sensor (in combination meter) • Cruise control actuator and ECU

WIRING DIAGRAM

See page DI–626.

INSPECTION PROCEDURE

1	**Check speedometer circuit (See page BE–38).**

NG → **Repair or replace speed sensor or combination meter assembly.**

OK

Check and replace cruise control actuator and ECU (See page IN–28).

DI0NW–04

DTC	32	Control Switch Circuit (Cruise Control Switch)

CIRCUIT DESCRIPTION

This circuit carries the SET/COAST, RESUME/Accel and CANCEL signals (each voltage) to the ECU.

DTC No.	Detection Item	Trouble Area
32	Short in control switch circuit	• Harness or connector between control switch and cruise control actuator and ECU. • Cruise control switch • Cruise control actuator and ECU

WIRING DIAGRAM

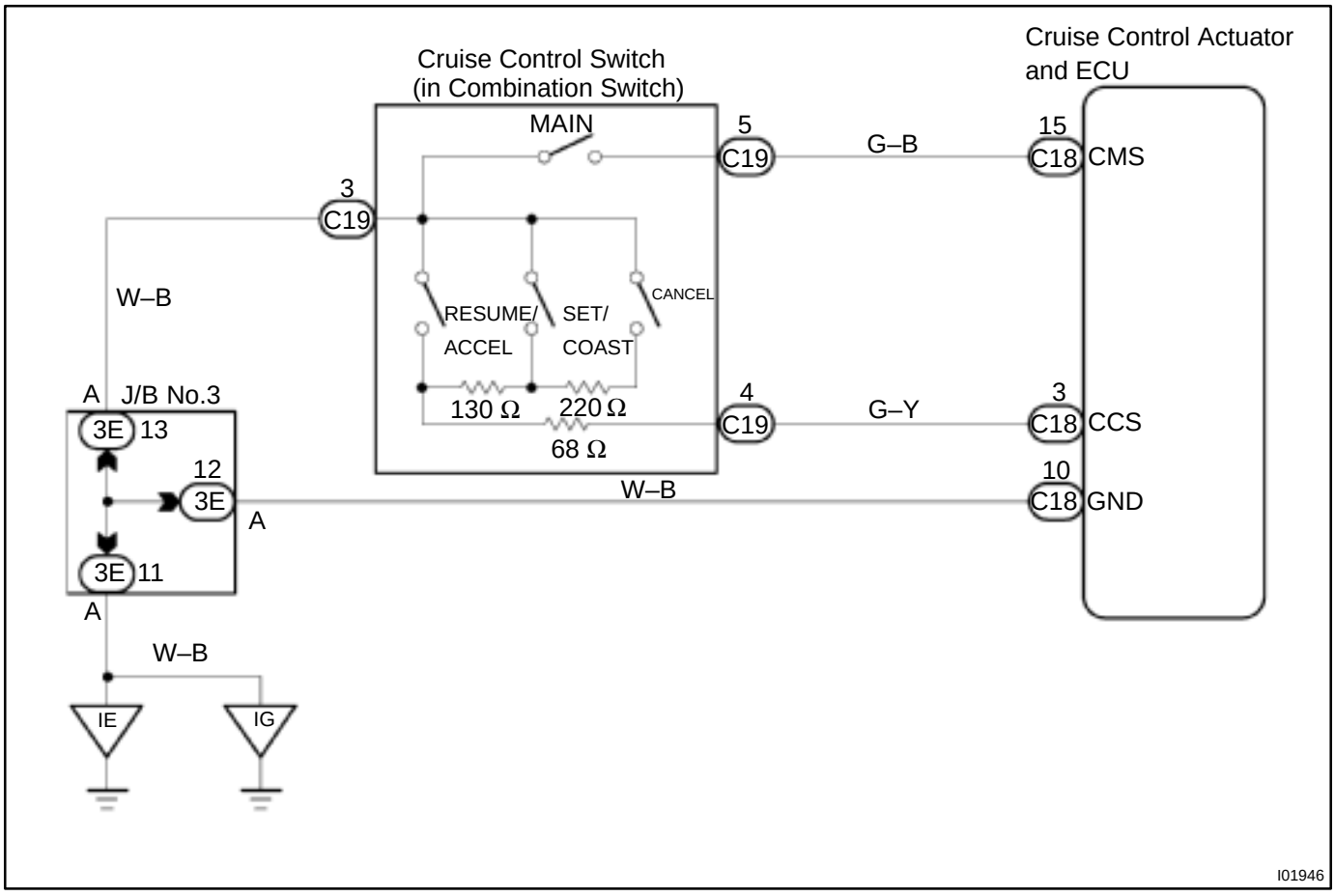

INSPECTION PROCEDURE

1	Input signal check.

Input Signal	Indicator Light Blinking Pattern
SET/COAST switch	ON / OFF — 2 Pulses
RESUME/ACCEL switch	ON / OFF — 3 Pulses
CANCEL switch	ON / OFF — SW OFF, SW ON

PREPARATION:

See input signal check on page DI–612.

CHECK:

Check the indicator light operation when each of the SET/COAST, RESUME/ACCEL and CANCEL is turned on.

OK:

SET/COAST, RESUME/ACCEL switch
The signals shown in the table on the left should be output when each switch is ON. The signal should disappear when the switch is turned OFF.
CANCEL switch
The indicator light goes off when the cancel switch is turned ON.

OK	Wait and see.

NG

2	Check control switch.

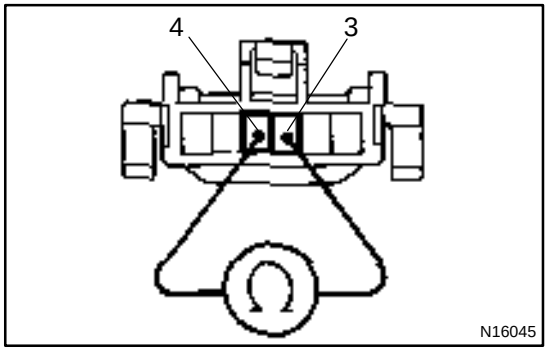

PREPARATION:

(a) Remove steering wheel center pad.
(b) Disconnect control switch connector.

CHECK:

Measure resistance between terminals 3 and 4 of control switch connector when control switch is operated.

Switch position	Resistance (Ω)
Neutral	∞ (No continuity)
RES/ACC	50 – 80
SET/COAST	180 – 220
CANCEL	400 – 440

OK	Replace control switch.

NG

3	**Check harness and connector between cruise control switch and cruise control actuator and ECU (See page IN–28).**

NG → **Repair or replace harness or connector.**

OK

4	**Input signal check (See step 1).**

OK → **Wait and see.**

NG

Check and replace cruise control actuator and ECU (See page IN–28).

Actuator Control Cable

INSPECTION PROCEDURE

1	**Actuator control cable inspection**

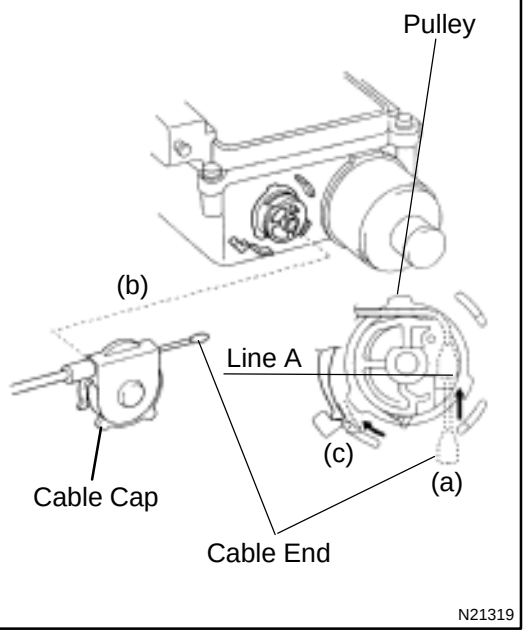

PREPARATION:

(a) Insert the inner cable end into the pulley and pull it up to the line ”A”, shown in the illustration.

HINT:

The end of the spring prevents the pulley from slipping out.

(b) Install the cable cap to fit it with the actuator.

(c) Turn the cable cap clockwise to lock.

(d) Installation is in the reverse order of removal.

CHECK:

Check that the actuator and control cable throttle link are properly installed and that the cable and the link are connected correctly.

Check that the actuator and bell crank are operating smoothly.

Check that the cable is not loose or too tight.

OK:

Freeplay: Less than 10 mm

HINT:

- If the control cable is very loose, the vehicle’s loss of speed going uphill will be large.
- If the control cable is too tight, the idle RPM will become high.

DI18I–03

Clutch Switch Circuit

CIRCUIT DESCRIPTION

When the clutch pedal is depressed, the clutch switch sends a signal to the cruise control ECU. When the signal is input to the cruise control ECU during cruise control driving, the cruise control ECU cancels cruise control.

WIRING DIAGRAM

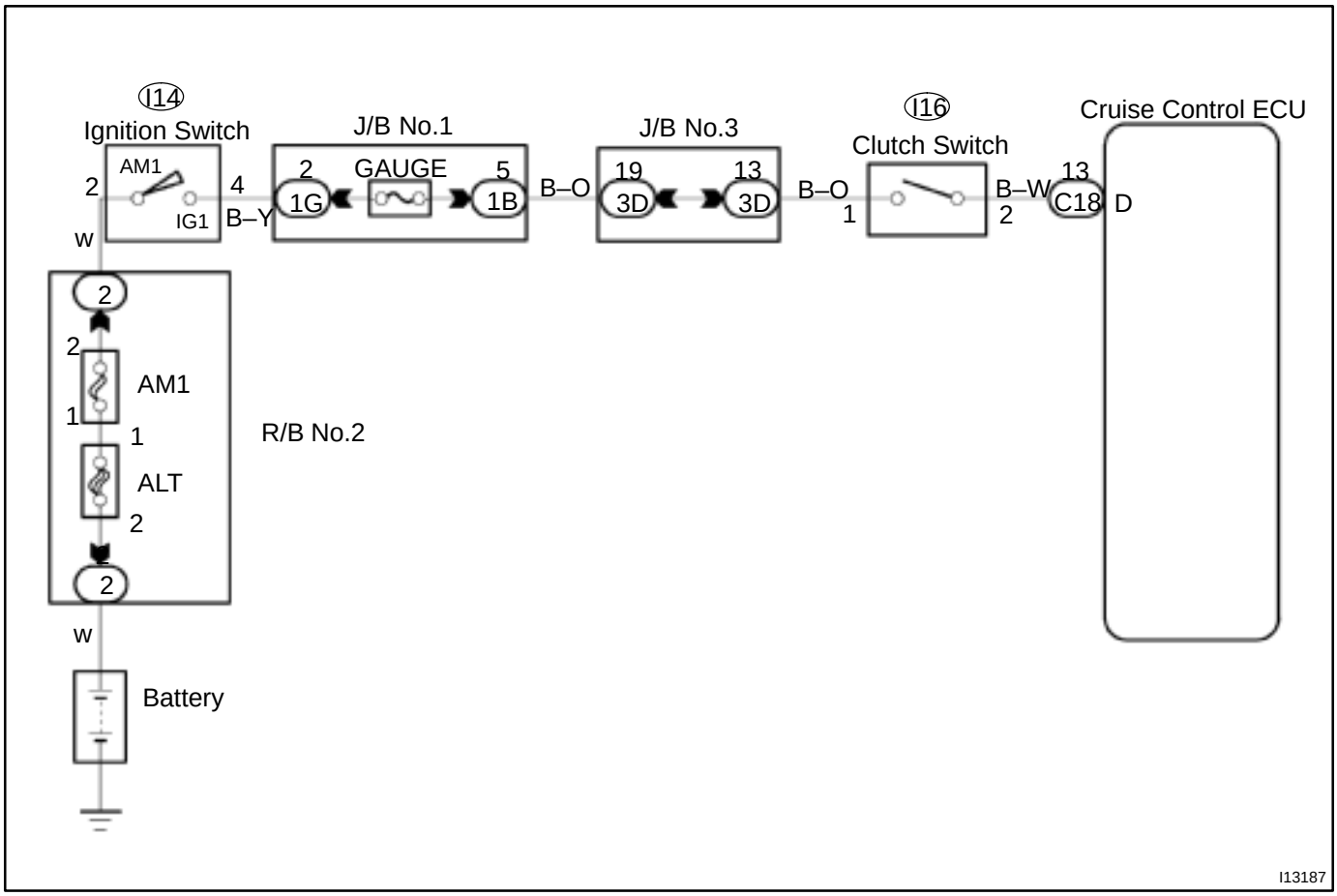

INSPECTION PROCEDURE

1	**Check starter operation.**

CHECK:

Check that the starter operates normally and that the engine starts.

NG → **Proceed to engine troubleshooting (See page DI–180).**

OK ↓

2	**Input signal check.**

Input Signal	Indicator Light Blinking Pattern
Clutch switch OFF (Depress clutch pedal)	Light: ON → SW ON; OFF - - - - - → SW OFF

PREPARATION:

See input signal check on page DI–612.

CHECK:

Check the indicator light when clutch pedal depressed.

OK:

The indicator light goes off when clutch pedal depressed.

OK → **Proceed to next circuit inspection shown on problem symptoms table (See page DI–621).**

NG ↓

3	**Check voltage between terminal D of cruise control actuator and ECU and body ground.**

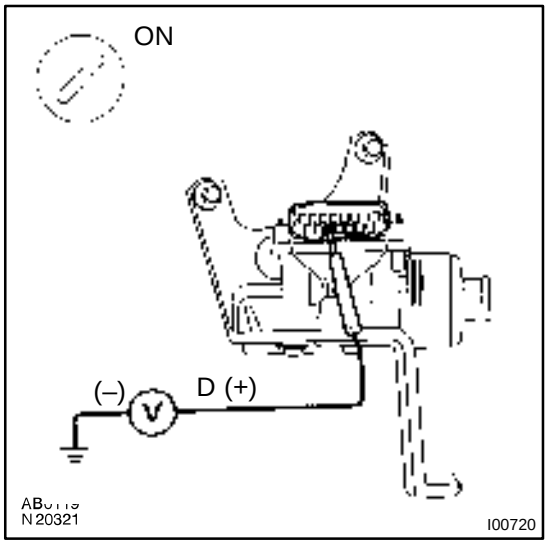

PREPARATION:

Turn ignition switch ON.

CHECK:

Measure voltage between terminal D of cruise control ECU connector and body ground when clutch pedal depressed and pushed in.

OK:

Shift Position	Voltage
Clutch pedal depressed	10 – 14 V
Clutch pedal pushed in	Below 1 V

OK → **Proceed to next circuit inspection shown on problem symptoms table (See page DI–621).**

NG

4	**Check for open in harness and connector between cruise control actuator and ECU and GAUGE fuse (See page IN–28).**

NG → **Repair or replace harness or connector.**

OK

Check and replace cruise control actuator and ECU (See page IN–28).

DI0NZ–06

Electronically Controlled Transmission Communication Circuit

CIRCUIT DESCRIPTION

When driving uphill under the cruise control, in order to reduce shifting due to ON–OFF overdrive operation and to provide smooth driving, when down shifting in the electronically controlled transmission occurs, a signal to prevent upshift until the end of the up hill slope is sent from the cruise control ECU to the electronically controlled transmission.

Terminal ECM of the cruise control ECU detects the shift change signal (output to electronically controlled transmission No. 2 solenoid) from the electronically controlled transmission.

If vehicle speeds down, also when terminal electronically controlled transmission of the cruise control ECU receives down shifting signal, it sends a signal from terminal OD to ECM to cut overdrive until the end of the uphill slope, and the gear shifts are reduced and gear shift points in the electronically controlled transmission are changed.

WIRING DIAGRAM

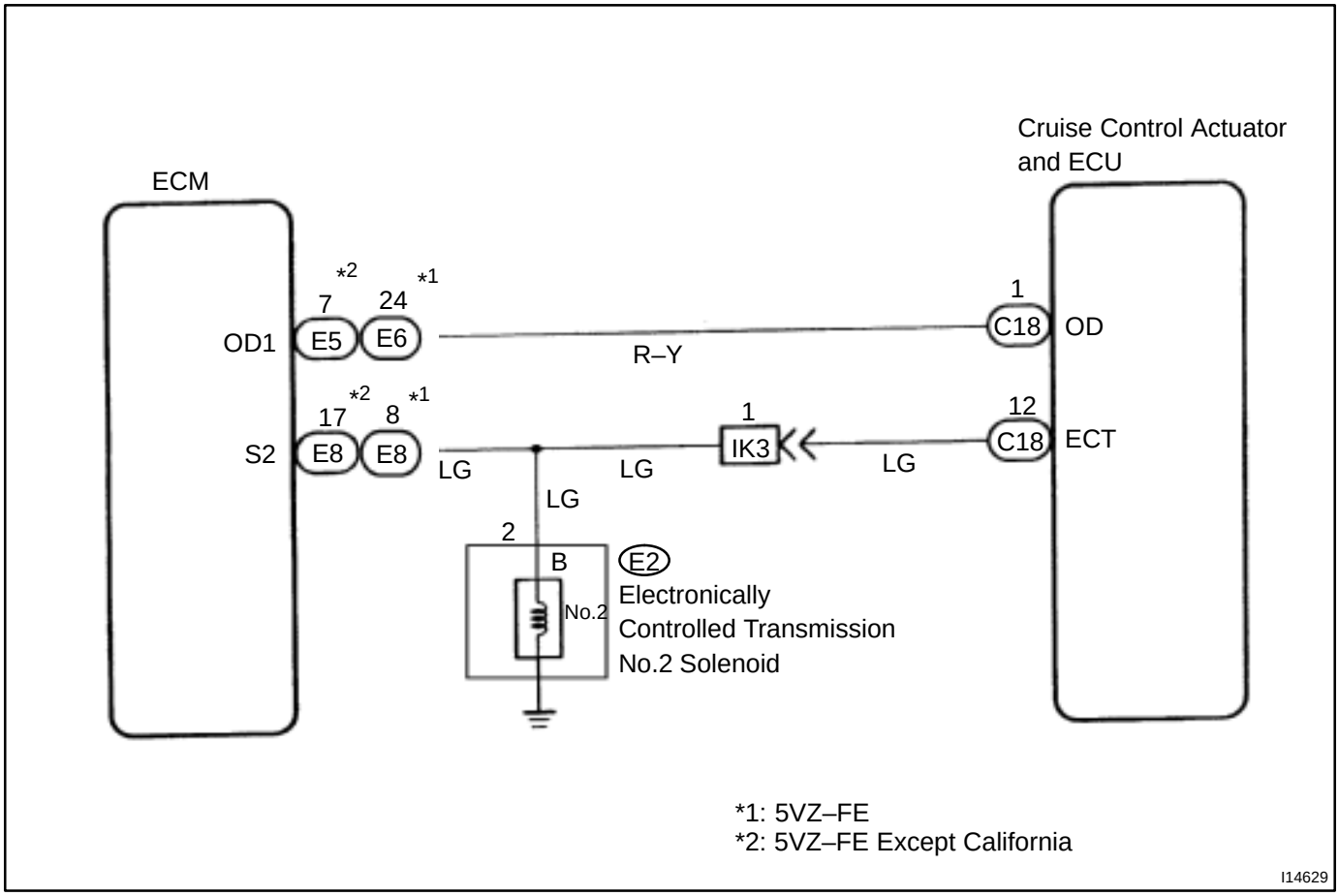

INSPECTION PROCEDURE

1	**Check operation of overdrive.**

PREPARATION:
Test drive after engine warms up.
CHECK:
Check that overdrive ON ↔ OFF occurs with operation of OD switch ON–OFF.

NG → **Check and repair electronically controlled transmission (See page DI–340).**

OK

2	**Check voltage between terminal OD of harness side connector of cruise control actuator and ECU and body ground.**

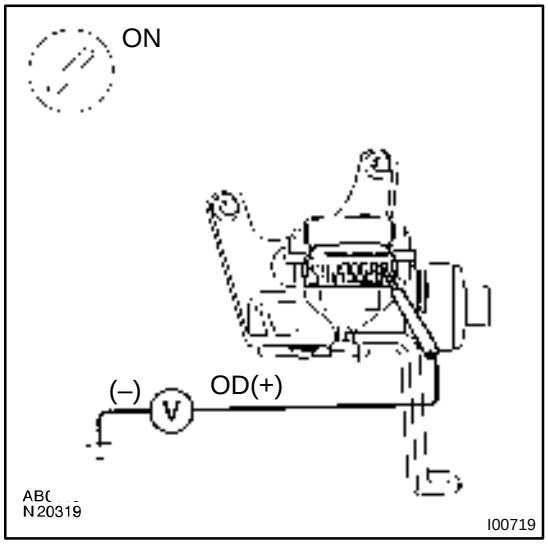

PREPARATION:
Remove cruise control ECU with connector still connected.
CHECK:
(a) Disconnect cruise control ECU connector.
(b) Turn ignition switch ON.
(c) Measure voltage between terminal OD of harness side connector of cruise control ECU and body ground.

OK:

Voltage: 10 – 14 V

NG → **Go to step 5.**

OK

3	**Check voltage between terminal ECT of cruise control actuator and ECU connector and body ground (On test drive).**

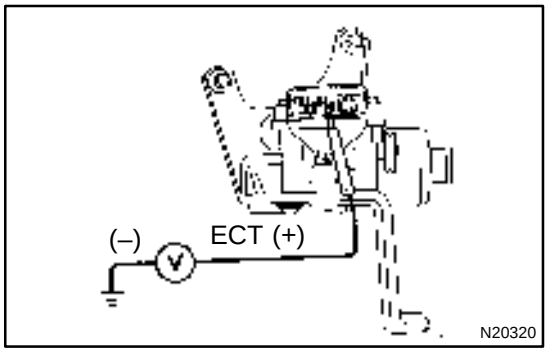

PREPARATION:

(a) Connect cruise control ECU connector.

(b) Test drive after engine warms up.

CHECK:

Check voltage between terminal ECT of cruise control ECU connector and body ground when OD switch is ON and OFF.

OK:

OD switch position	Voltage
ON	8 – 14 V
OFF	Below 0.5 V

OK → **Proceed to next circuit inspection shown on problem symptoms table(See page DI–621).**

NG

4	**Check harness and connector between terminal ECT of cruise control actuator and ECU and electronically controlled transmission solenoid (See page IN–28).**

NG → **Repair or replace harness or connector.**

OK

Check and replace cruise control actuator and ECU (See page IN–28).

5	**Check harness and connector between terminal OD of cruise control actuator and ECU and terminal OD1 of ECM (See page IN–28).**

NG → **Repair or replace harness or connector.**

OK

Check and replace cruise control actuator and ECU (See page IN–28).

DI0O6–06

ECU Power Source Circuit

CIRCUIT DESCRIPTION

The ECU power source supplies power to the actuator and sensors, etc.. When terminal GND and the cruise control ECU case are grounded.

WIRING DIAGRAM

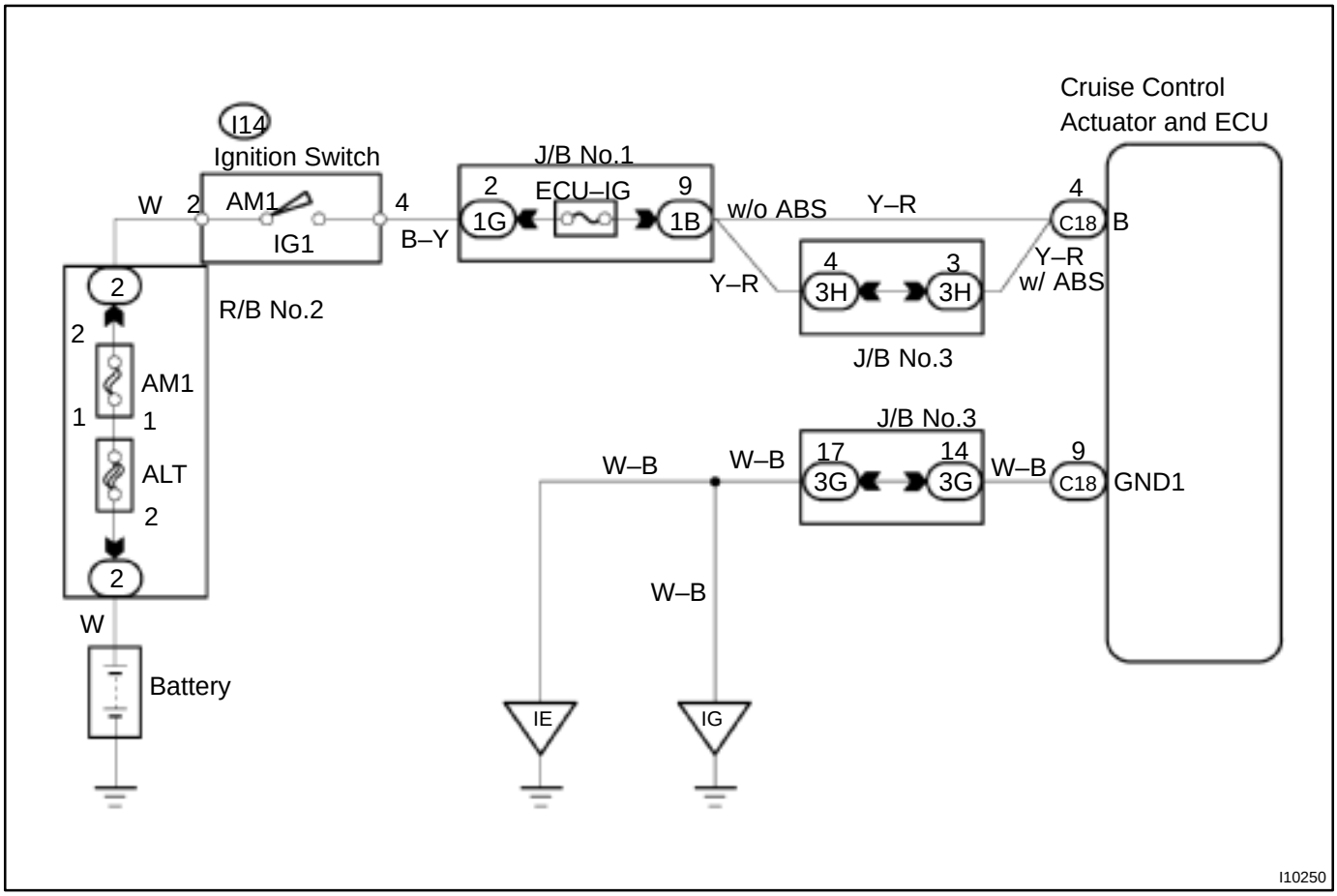

INSPECTION PROCEDURE

1	**Check ECU–IG fuse.**

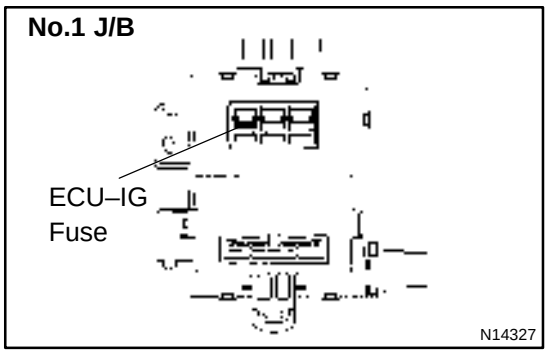

PREPARATION:
Remove ECU–IG fuse from junction block No.1.
CHECK:
Check continuity of ECU–IG fuse.
OK:
Continuity

NG → **Check for short in all the harness and components connected to ECU–IG fuse.**

OK

2	**Check voltage between terminals B and GND of cruise control actuator and ECU connector.**

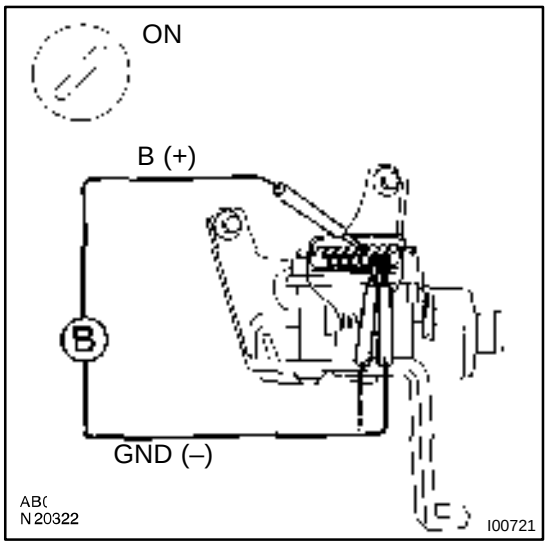

PREPARATION:
Remove cruise control ECU with connector still connected.
CHECK:
(a) Turn ignition switch ON.
(b) Measure voltage between terminals B and GND of cruise control ECU connector.
OK:
Voltage: 10 – 14 V

OK → **Proceed to next circuit inspection shown on problem symptoms table (See page DI–621).**

NG

3	**Check resistance between terminal GND of cruise control actuator and ECU connector and body ground (See page IN–28).**

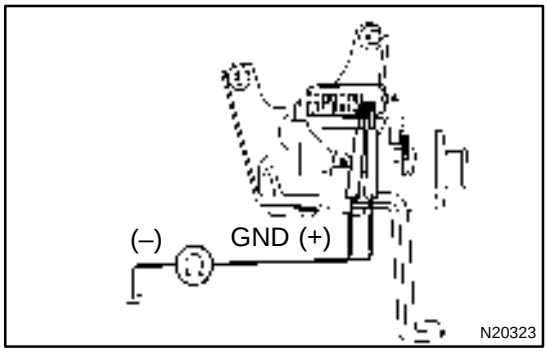

CHECK:

Measure resistance between terminal GND of cruise control ECU connector and body ground.

OK:

Resistance: Below 1 Ω

NG → **Repair or replace harness or connector.**

OK

Check and repair harness and connector between battery and cruise control actuator and ECU (See page IN–28).

DI0NY–06

Idle Switch Circuit

CIRCUIT DESCRIPTION

When the idle switch is turned ON, a signal is sent to the ECU. The ECU uses this signal to correct the discrepancy between the throttle valve position and the actuator position sensor valve to enable accurate cruise control at the set speed. If the idle switch is malfunctioning, problem symptoms also occur in the engine, so also inspect the engine.

WIRING DIAGRAM

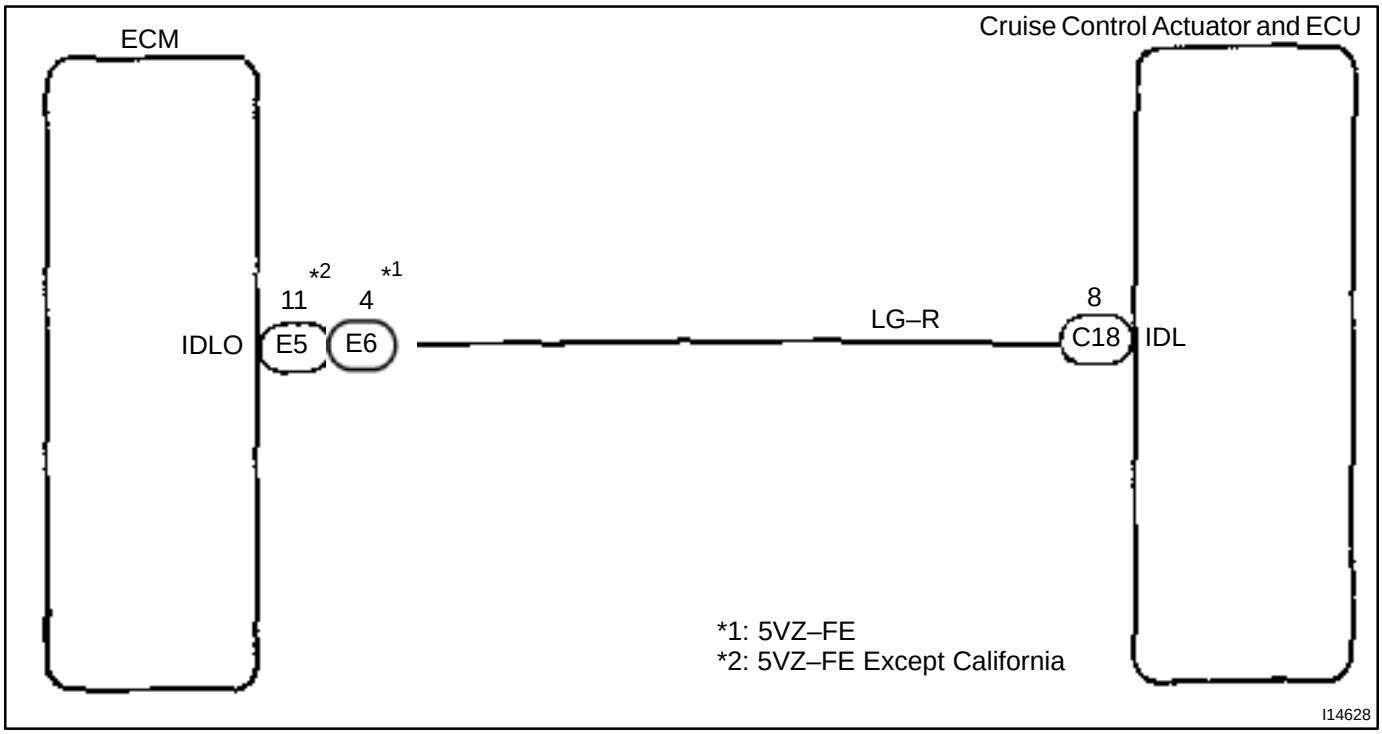

INSPECTION PROCEDURE

1	Check voltage between terminal IDL of ECU connector and body ground.

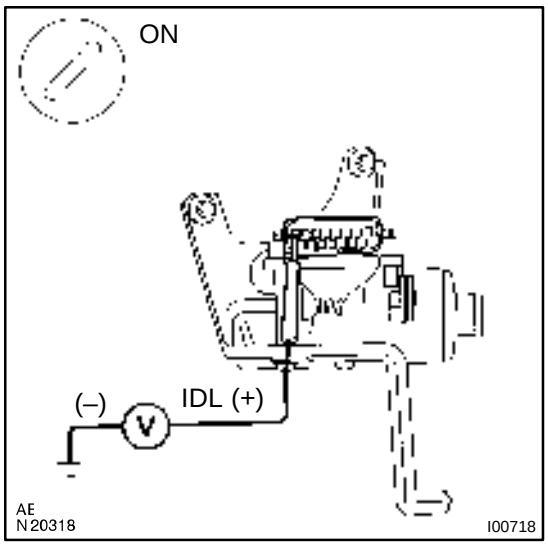

PREPARATION:

(a) Remove the cruise control ECU with connector still connected.
(b) Disconnect ECM and ABS ECU connectors.
(c) Ignition switch ON.

CHECK:

Measure voltage between terminal IDL of ECU connector and body ground when the throttle valve is fully closed and fully opened.

OK:

Throttle valve position	Voltage
Fully opened	10 – 14 V
Fully closed	Below 2 V

OK	Proceed to next circuit inspection shown on problem symptoms table (See page DI–621).

NG

2	Check throttle position sensor.

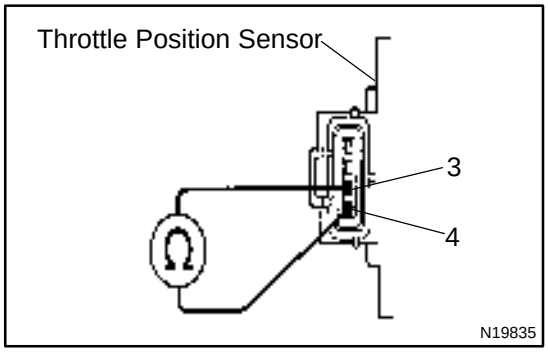

PREPARATION:

Disconnect throttle position sensor connector.

CHECK:

Measure resistance between terminals 3 and 4 of throttle position sensor connector when the throttle valve is fully closed and fully opened.

OK:

Throttle valve position	Resistance
Fully opened	1 MΩ or higher
Fully closed	Below 2.3 kΩ

NG	Replace throttle position sensor.

OK

3	**Check for open and short in harness and connector between ECU and throttle position sensor, throttle position sensor and body ground (See page IN–28).**

NG → **Repair or replace harness or connector.**

OK

Check and replace cruise control actuator and ECU (See page IN–28).

DI0O9–06

CRUISE MAIN Indicator Light Circuit

CIRCUIT DESCRIPTION

When the cruise control main switch is turned ON, CRUISE MAIN indicator light lights up.

WIRING DIAGRAM

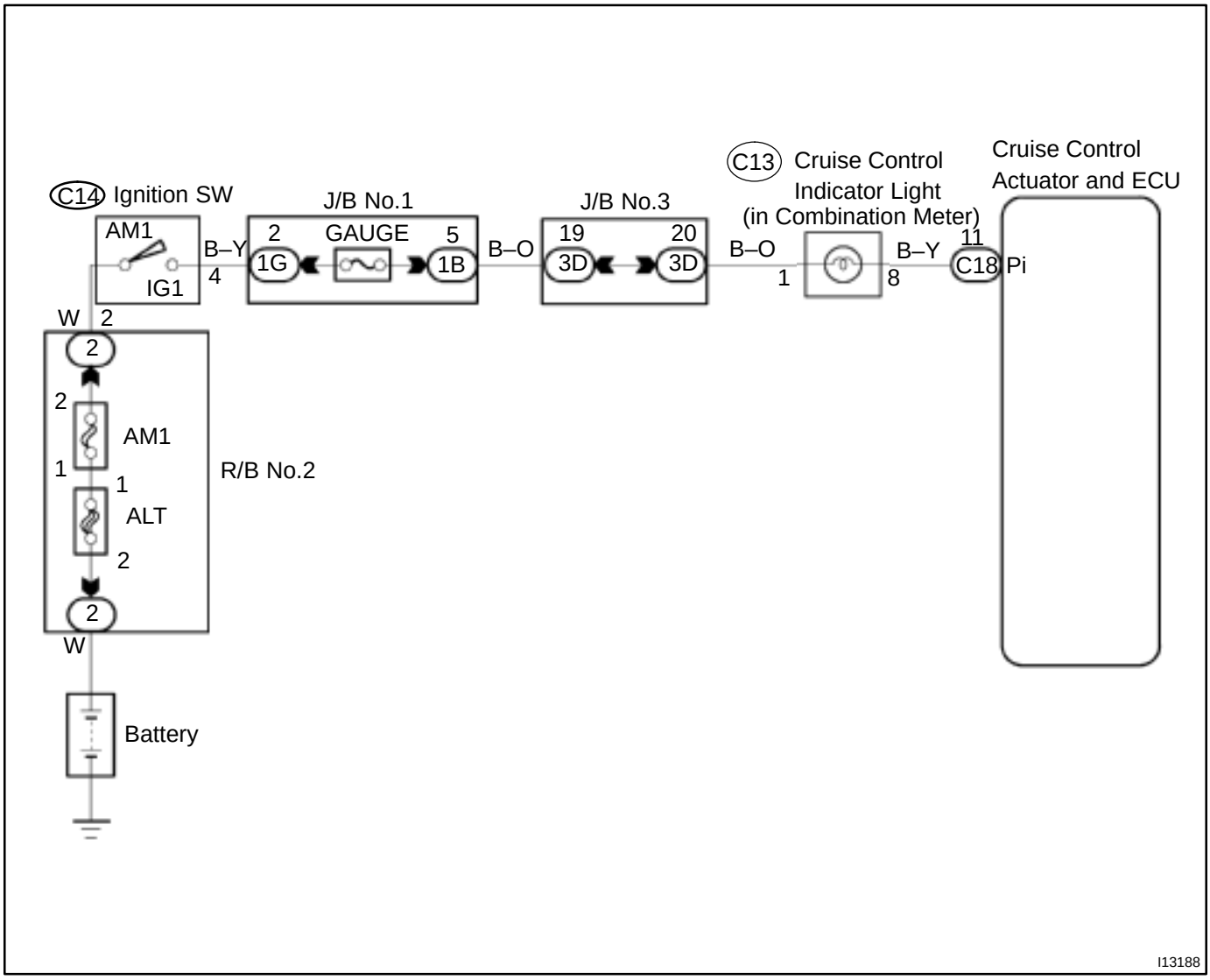

INSPECTION PROCEDURE

1	**Check voltage between terminals PI and GND of cruise control actuator and ECU connector.**

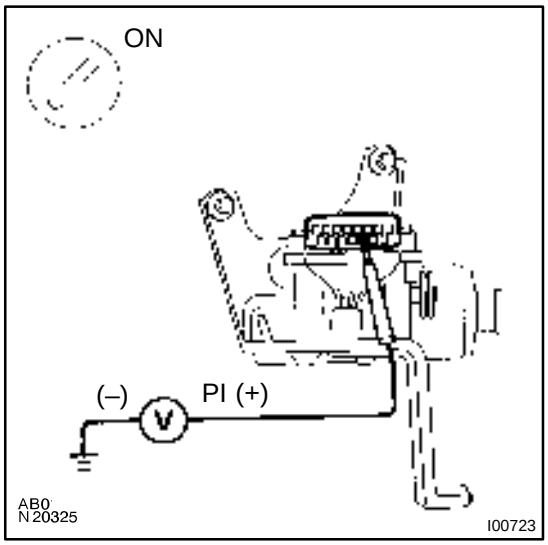

PREPARATION:
Ignition switch ON.
CHECK:
Measure voltage between terminals PI and GND of cruise control ECU connector when the main switch on and off.
OK:

Switch position	Voltage
OFF	10 – 16 V
ON	Below 1.2 V

OK → **Proceed to next circuit inspection shown on problem symptoms table. (See page DI–621)**

NG

2	**Check combination meter (See page BE–2).**

NG → **Replace combination meter.**

OK

Check and replace cruise control actuator and ECU (See page IN–28).

DI0O7–04

Main Switch Circuit (Cruise Control Switch)

CIRCUIT DESCRIPTION

When the cruise control main switch is turned off, the cruise control does not operate.

WIRING DIAGRAM

See page DI–629.

INSPECTION PROCEDURE

1	**Check voltage between terminal CMS of cruise control actuator and ECU connector and body ground.**

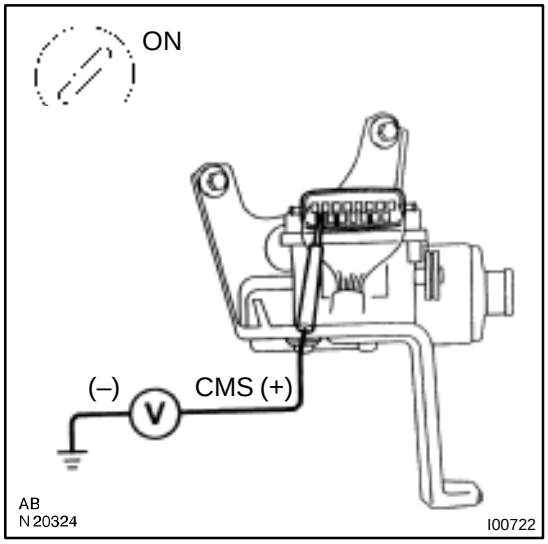

PREPARATION:

Remove the cruise control ECU with connector still connected.

CHECK:

(a) Turn ignition switch ON.

(b) Measure voltage between terminal CMS of cruise control ECU connector when main switch is held on and off.

OK:

Main switch	Voltage
OFF	10 – 14 V
ON	Below 1 V

OK → **Proceed to next circuit inspection shown on problem symptoms table (See page DI–621).**

NG

2	Check main switch continuity.

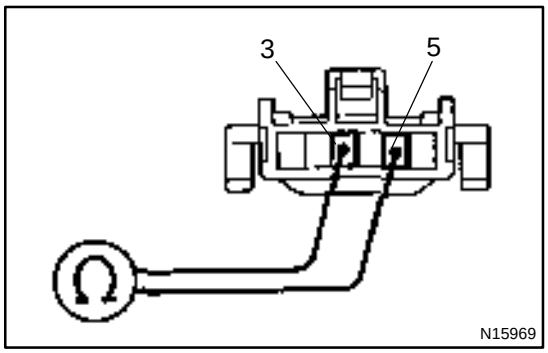

PREPARATION:

(a) Remove the steering wheel center pad. (See page SR–13)

(b) Disconnect the cruise control switch connector.

CHECK:

Check continuity between terminals 3 and 5 of cruise control switch connector when main switch is held on and off.

OK:

Switch position	Tester connection	Specified condition
OFF	3 – 5	No continuity
Hold ON	3 – 5	Continuity

NG → **Replace control switch.**

OK ↓

3	Check harness and connector between cruise control actuator and ECU and main switch (See page IN–28).

NG → **Repair or replace harness or connector.**

OK ↓

Check and replace cruise control actuator and ECU (See page IN–28).

Park/Neutral Position Switch Circuit

CIRCUIT DESCRIPTION

When the shift position is put in positions except D, a signal is sent from the park/neutral position switch to the ECU. When this signal is input during cruise control driving, the ECU cancels the cruise control.

WIRING DIAGRAM

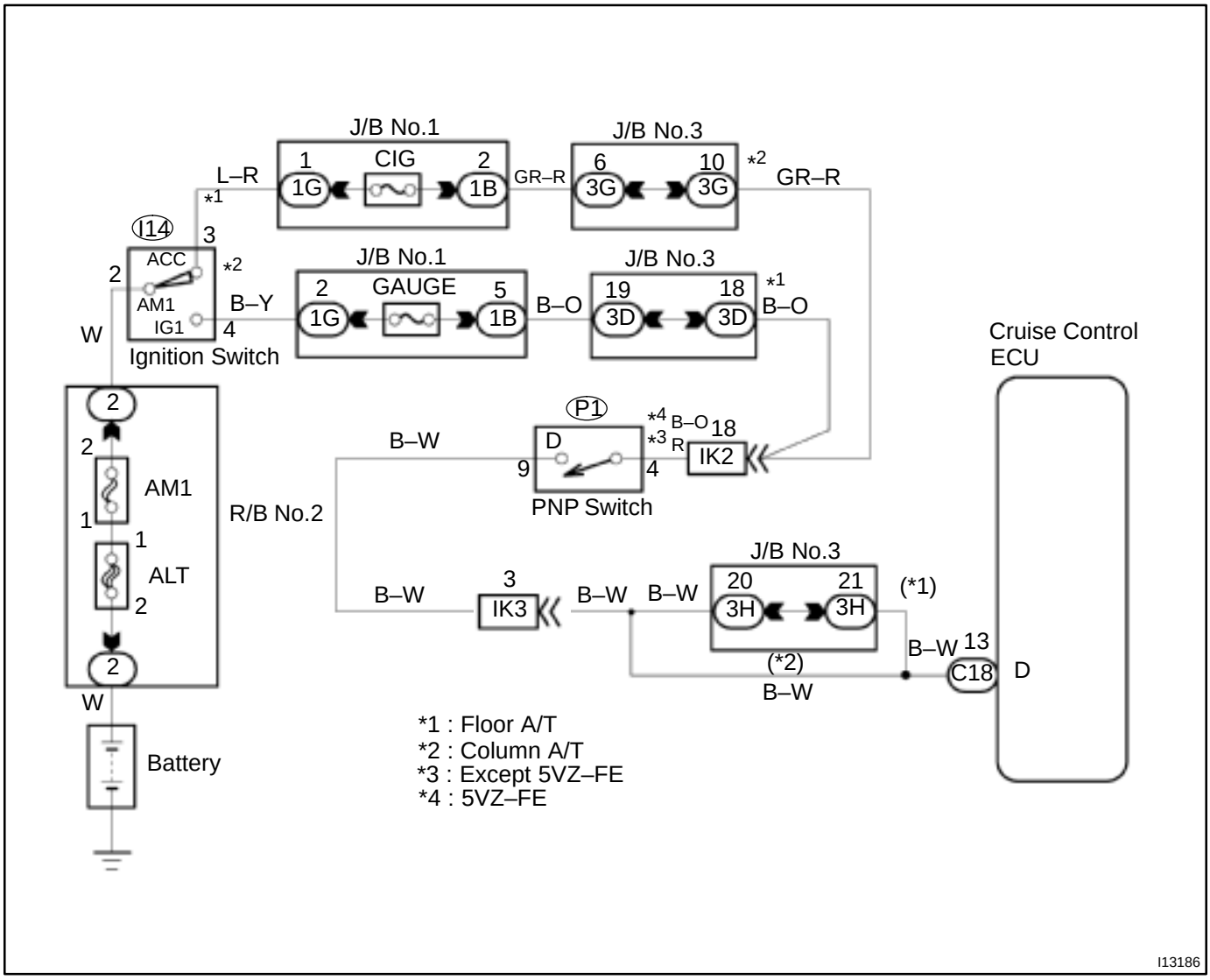

INSPECTION PROCEDURE

1	**Check starter operation.**

CHECK:

Check that the starter operates normally and that the engine starts.

NG → **Proceed to engine troubleshooting (See page DI–180).**

OK

2	**Input signal check.**

Input Signal	Indicator Light Blinking Pattern
Turn PNP switch OFF (Shift to positions except D)	Light: ON — SW ON; OFF — SW OFF

PREPARATION:

See input signal check on page DI–612.

CHECK:

Check the indicator light when shifting into positions except D.

OK:

The indicator light goes off when shifting into positions except D.

OK → **Proceed to next circuit inspection shown on problem symptoms table (See page DI–621).**

NG

3	Check voltage between terminal D of cruise control actuator and ECU and body ground.

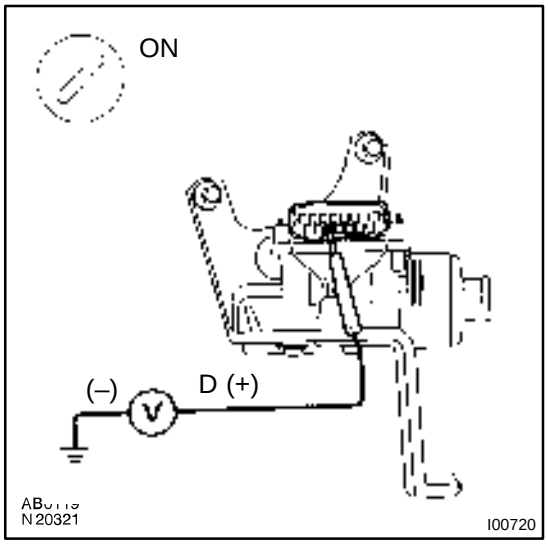

PREPARATION:
Turn ignition switch ON.
CHECK:
Measure voltage between terminal D of cruise control ECU connector and body ground when shifting into D position and other positions.
OK:

Shift Position	Voltage
D position	10 – 14 V
Other positions	Below 1 V

OK → **Proceed to next circuit inspection shown on problem symptoms table (See page DI–621).**

NG

4	Check harness and connector between PNP switch and cruise control actuator and ECU (See page IN–28).

NG → **Repair or replace harness or connector.**

OK

Check and replace cruise control actuator and ECU (See page IN–28).

Stop Light Switch Circuit

CIRCUIT DESCRIPTION

When the brake is on, battery positive voltage normally applies through the STOP fuse and stop light switch to terminal STP– of the ECU, and the ECU turns the cruise control off.
A fail–safe function is provided so that cancel functions normally, even if there is a malfunction in the stop light signal circuit.
If the harness connected to terminal STP– has an open circuit, terminal STP– will have battery positive voltage and the cruise control will be turned off.
Also, when the brake is on, the magnetic clutch is cut mechanically by the stop light switch, turning the cruise control off.

WIRING DIAGRAM

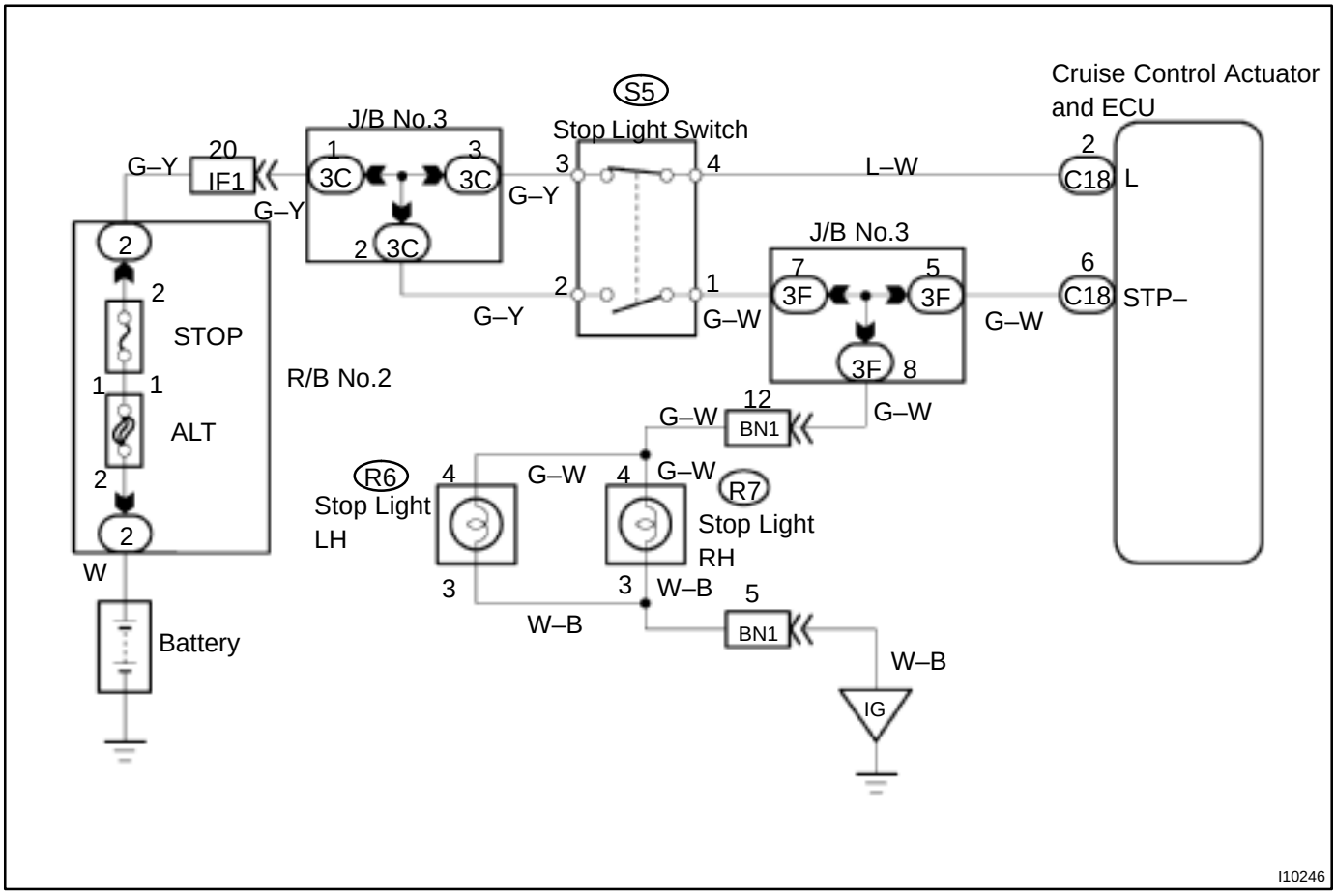

INSPECTION PROCEDURE

1	**Check operation of stop light.**

CHECK:

Check that stop light comes on when brake pedal is depressed, and turns off when brake pedal is released.

NG → **Check stop light system.**

OK

2	**Input signal check.**

Input Signal	Indicator Light Blinking Pattern
Stop light switch ON	Light: ON (SW OFF) / OFF (SW ON)

CHECK:

(a) See input signal check on DI–612.

(b) Check the indicator light when the brake pedal is depressed.

OK:

The indicator light goes off when the brake pedal is depressed.

OK → **Proceed to next circuit inspection shown on problem symptoms table (See page DI–621).**

NG

3	**Check voltage between terminal STP– of cruise control actuator and ECU connector and body ground.**

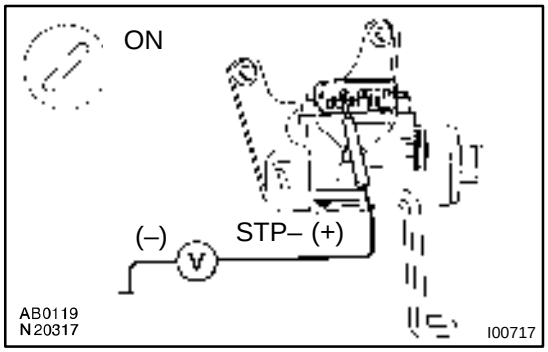

PREPARATION:

Remove cruise control ECU with connectors still connected.

CHECK:

(a) Turn ignition switch ON.

(b) Measure voltage between terminal STP– of cruise control ECU connector and body ground, when the brake pedal is depressed and released.

OK:

Brake pedal position	Voltage
Depressed	10 – 14 V
Released	Below 1 V

OK → **Proceed to next circuit inspection shown on problem symptoms table (See page DI–621).**

NG

4	**Check for open in harness and connectors between terminal STP– of cruise control actuator and ECU and stop light switch (See page IN–28).**

NG → **Repair or replace harness or connector.**

OK

Check and replace cruise control actuator and ECU (See page IN–28).

Diagnosis Circuit

CIRCUIT DESCRIPTION

This circuit sends a signal to the ECU that DTC output is required.

WIRING DIAGRAM

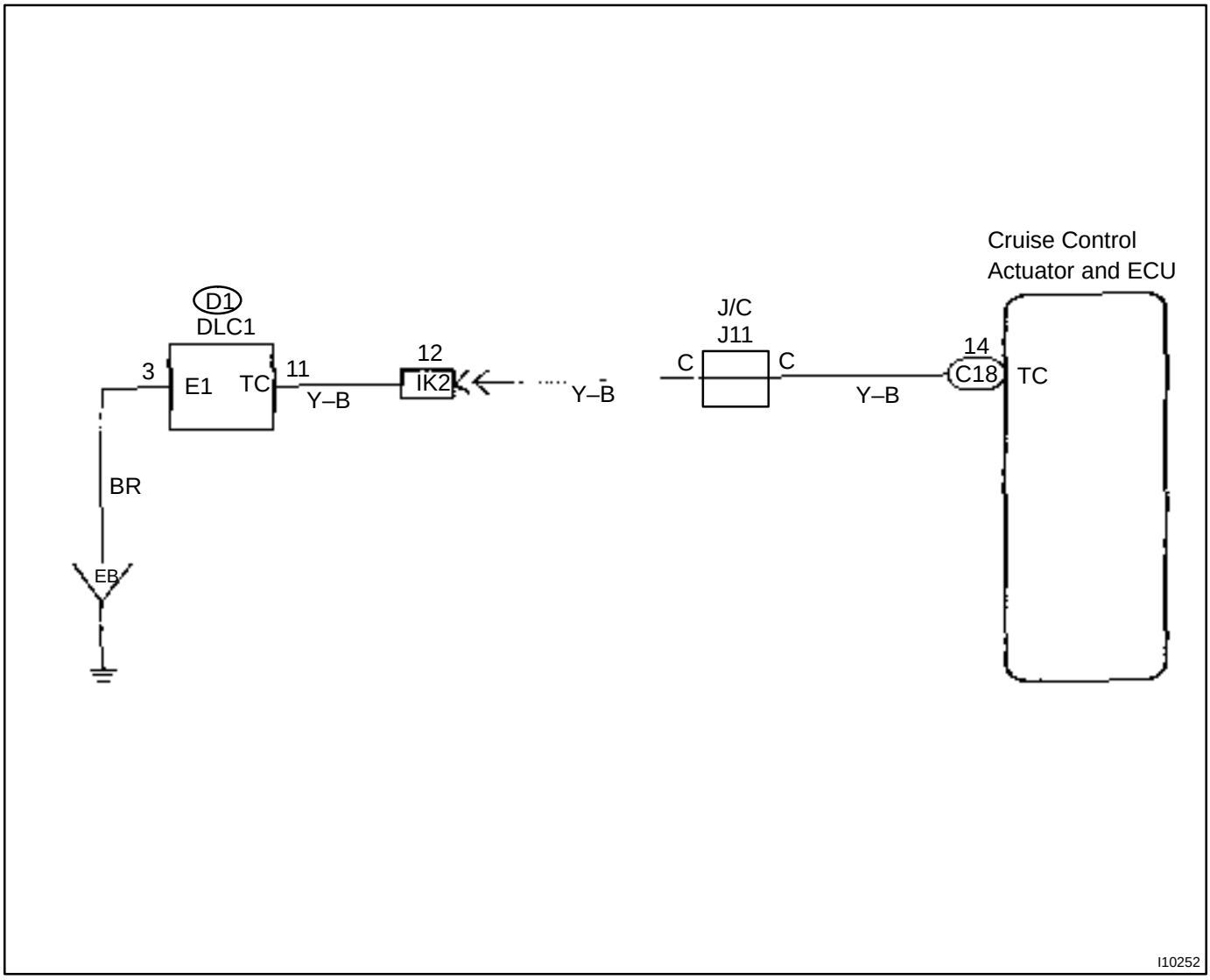

INSPECTION PROCEDURE

1	**Check voltage between terminals Tc and E_1 of DLC1.**

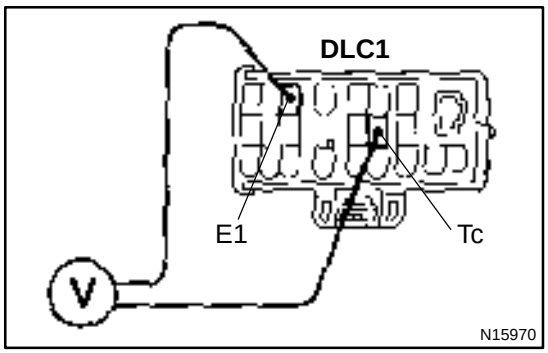

CHECK:

(a) Turn the ignition switch ON.

(b) Measure voltage between terminals Tc and E_1 of DLC1.

OK:

Voltage: 10 – 14 V

OK → **Proceed to next circuit inspection shown on problem symptoms table (See page DI–621).**

NG

2	**Check harness and connector between cruise control actuator and ECU and DLC1, DLC1 and body ground (See page IN–28).**

NG → **Repair or replace harness or connector.**

OK

Check and replace cruise control actuator and ECU (See page IN–28).

DI18C–01

CUSTOMER PROBLEM ANALYSIS CHECK

CRUISE CONTROL SYSTEM Check Sheet

Inspector's name: _____

Customer's Name		**Registration No.**	
		Registration Year	
		Frame No.	
Date of Vehicle Brought in	/ /	**Odometer Reading**	**km** **Mile**

Condition of Problem Occurrence	**Date of Problem Occurrence**	/ /
	How Often does Problem Occur?	☑ Continuous ☑ Intermittent (Times a day)
	Vehicle Speed when Problem Occurred	**km** **Mile**

Symptoms	☑ Auto cancel occurs	● Driving condition ☐ City driving ☐ Freeway ☐ Up hill ☐ Down hill ● After cancel occurred, did the driver activate cruise control again? ☐ Yes ☐ No
	☐ Cancel does not occur	☐ With brake ON ☐ Except D position shift ☐ At 40 km/h (25 mph) or less ☐ When control SW turns to CANCEL position
	☐ Cruise control malfunction	☐ Slip to acceleration side ☐ Slip to deceleration side ☐ Hunting occurs ☐ O/D cut off does not occur ☐ O/D does not return
	☐ Switch malfunction	☐ SET ☐ ACCEL ☐ COAST ☐ RESUME ☐ CANCEL
	☐	☐ Remains ON ☐ Does not light up ☐ Blinking

DTC Check	**1st Time**	☐ Normal Code ☐ Malfunction Code (Code)
	2nd Time	☐ Normal Code ☐ Malfunction Code (Code)

DI18E–01

DIAGNOSTIC TROUBLE CODE CHART

If a malfunction code is displayed during the diagnostic trouble code check, check the circuit listed for that code in the table below and proceed to the appropriate page.

DTC No. (See Page)	Detection Item	Trouble Area
12 (DI–622)	Actuator Circuit	• Connector of cruise control actuator and ECU • STOP fuse and stop light switch • Cruise control actuator and ECU
14 (DI–625)	Actuator Mechanical Malfunction	• Connector of cruise control actuator and ECU • Cruise control actuator and ECU
21 (DI–626)	Open in Vehicle Speed Sensor Circuit	• Harness or connector between vehicle speed sensor and combination meter, combination meter and cruise control actuator and ECU • Speed sensor (in combination meter) • Combination meter • Cruise control actuator and ECU
23 (DI–628)	Vehicle Speed Signal abnormal	• Speed sensor (in combination meter) • Combination meter cable • Cruise control actuator and ECU
32 (DI–629)	Control Switch Circuit	• Harness or connector between control switch and cruise control actuator and ECU • Cruise control switch • Cruise control actuator and ECU

CRUISE CONTROL SYSTEM (FORD Made)

DI18B–01

HOW TO PROCEED WITH TROUBLESHOOTING

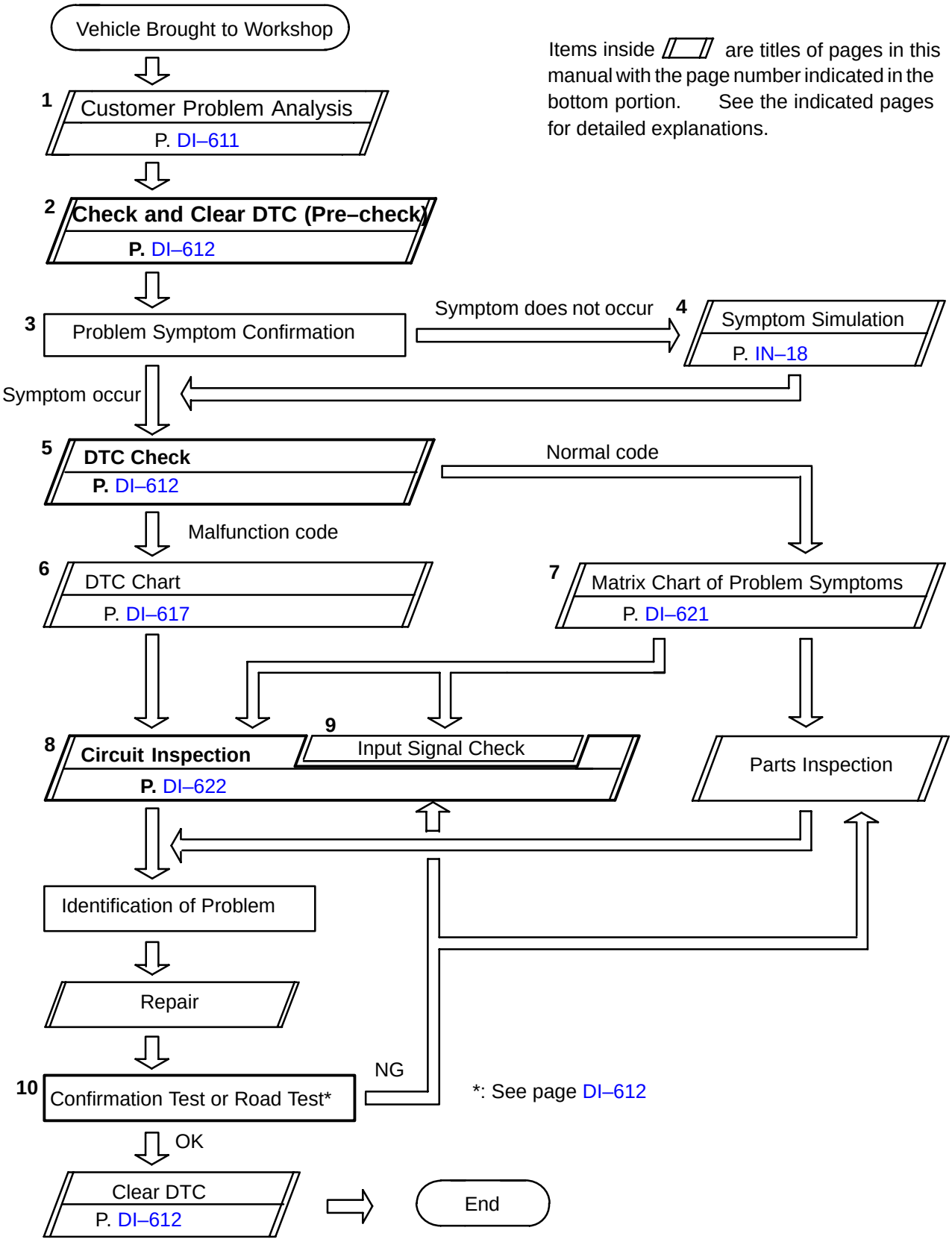

Items inside ▱ are titles of pages in this manual with the page number indicated in the bottom portion. See the indicated pages for detailed explanations.

*: See page DI–612

DI18F–02

PARTS LOCATION

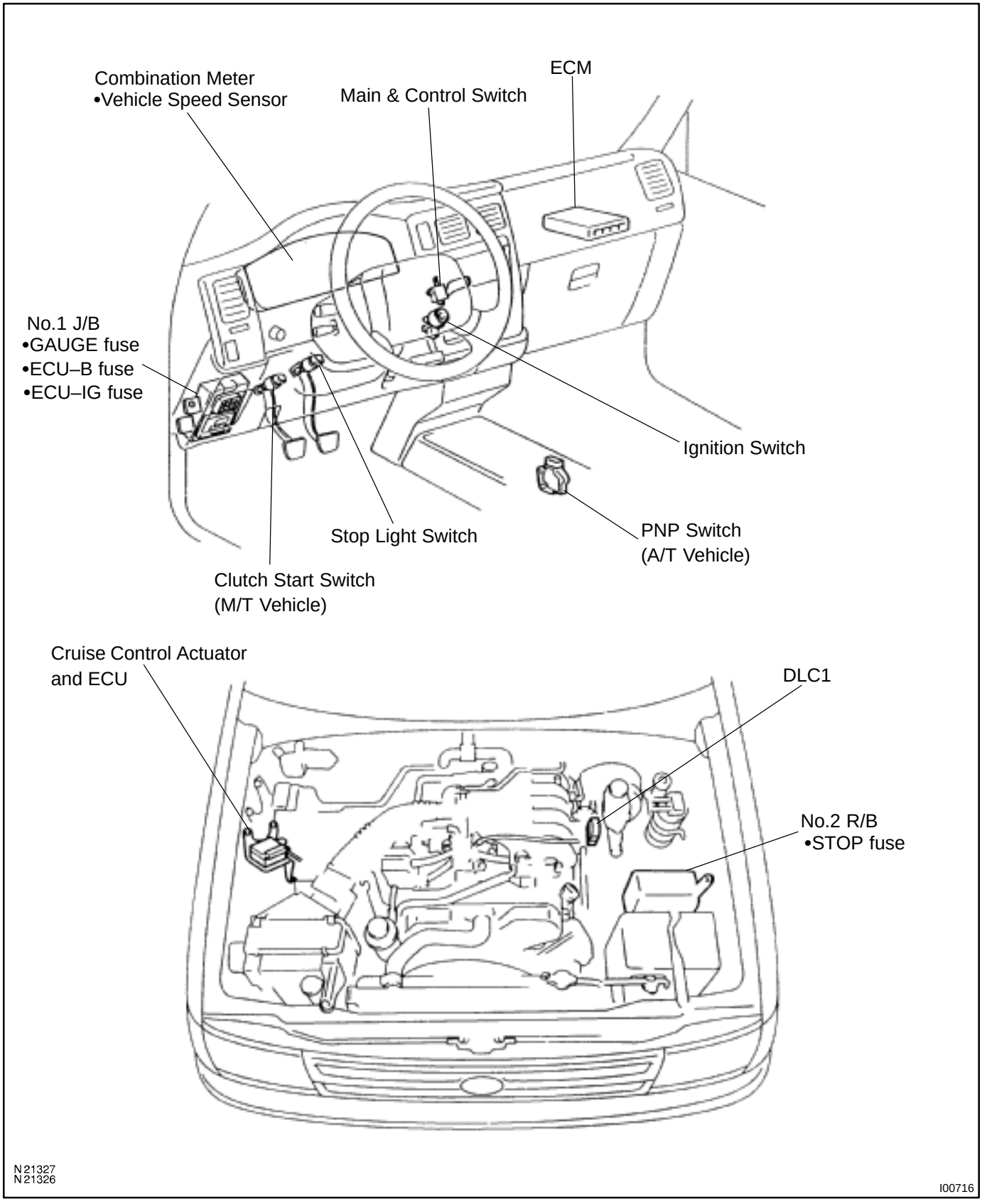

DI18D–02

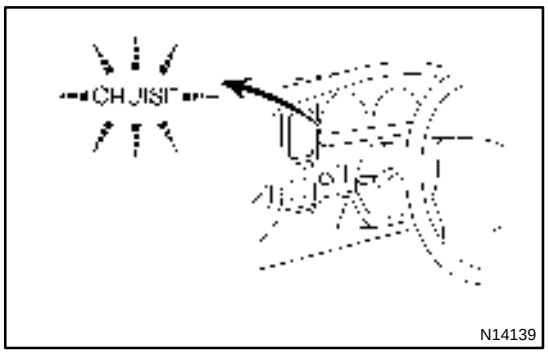

PRE–CHECK

1. DIAGNOSIS SYSTEM

(a) Check the indicator.

(1) Turn the ignition switch ON.

(2) Check that the CRUISE MAIN indicator light lights on when the cruise control main switch is turned on, and that the indicator light goes off when the main switch is turned OFF.

HINT:

If the indicator check result is not normal, proceed to troubleshooting (See page BE–2) for the combination meter section.

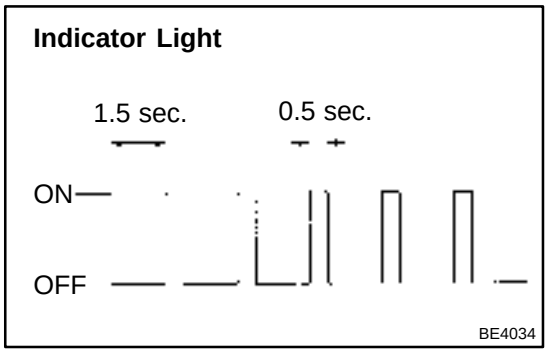

(b) Check the DTC.

HINT:

If a malfunction occurs in the No. 1 vehicle speed sensor or actuator, etc. during cruise control driving, the ECU actuates AUTO CANCEL of the cruise control and turns on and off the CRUISE MAIN indicator light to inform the driver of a malfunction. At the same time, the malfunction is stored in memory as a DTC.

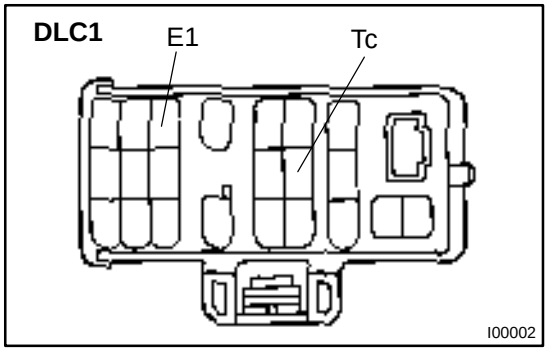

(c) Using diagnosis check wire, check the output of DTC.

(1) Turn the ignition switch ON.

(2) Using SST, connect terminals Tc and E_1 of DLC1.

SST 09843–18020

(3) Read the DTC on the CRUISE MAIN indicator light.

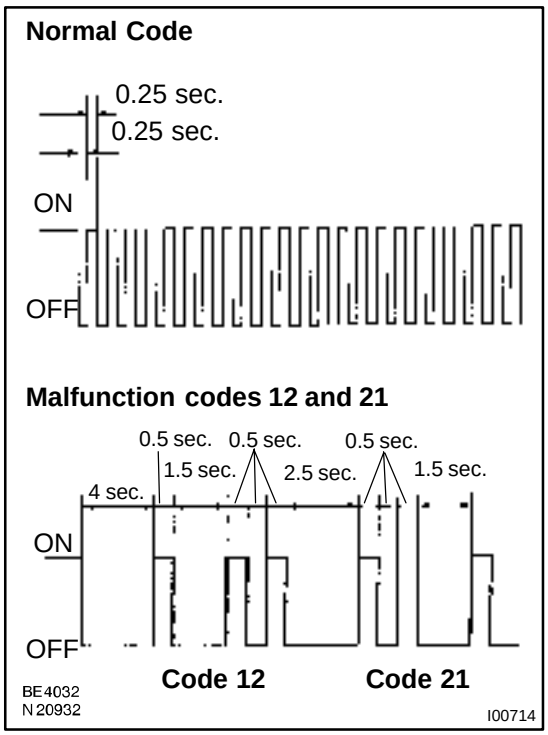

HINT:

If the DTC is not output, inspect the diagnosis circuit (See page DI–655).

As an example, the blinking patterns for codes; normal, 12 and 21 are shown in the illustration.

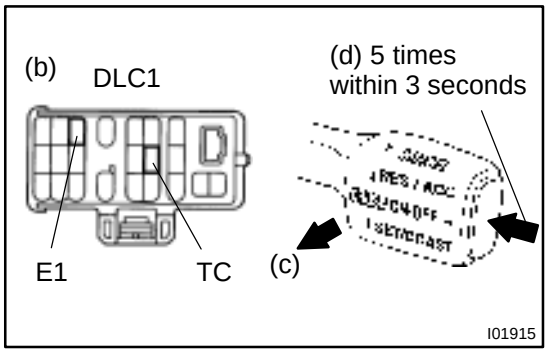

2. DTC CLEARANCE (ERASE MODE)

HINT:

During in the erase mode, diag detection does not work.

(a) Drive at about 15 km/h or below.

(b) Using SST, connect terminals Tc and E_1 of DLC1.
SST 09843–18020

(c) Pull the cruise control switch to CANCEL.

(d) On the above metioned condition, turn on the cruise control main switch 5 times within 3 seconds.

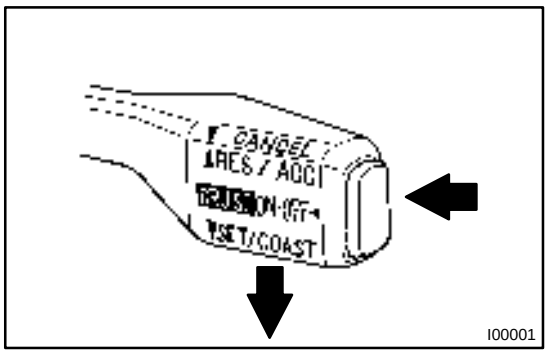

3. PROBLEM SYMPTOM CONFIRMATION (ROAD TEST)

(a) Inspect the SET switch.
  (1) Push the main switch ON.
  (2) Drive at a desired speed (40 km/h (25 mph) or higher).
  (3) Press the control switch to the SET/COAST.
  (4) After releasing the switch, check that the vehicle cruises at the desired speed.

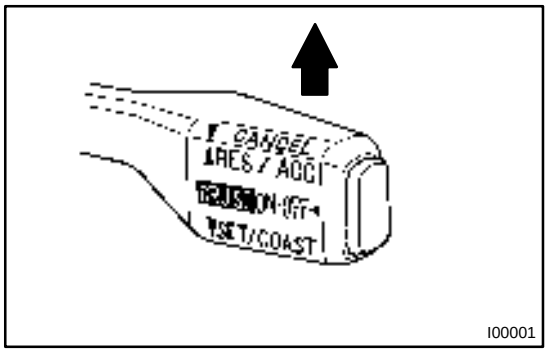

(b) Inspect the ACCEL switch.
  (1) Push the main switch ON.
  (2) Drive at a desired speed (40 km/h (25 mph) or higher).
  (3) Check that the vehicle speed increases while the control switch is turned to RES/ACC, and that the vehicle cruises at the set speed when the switch is released.
  (4) Momentarily press the control switch upward in the RES/ACC and then immediately release it. Check that the vehicle speed increases by about 1.5 km/h (Tap–up function).

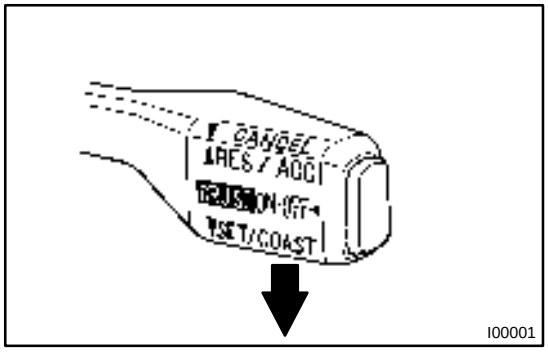

(c) Inspect the COAST.
  (1) Push the main switch ON.
  (2) Drive at a desired speed (40 km/h (25 mph) or higher).
  (3) Check that the vehicle speed is decreases while the control switch is turned to SET/COAST, and the vehicle cruise at the set speed when the switch is released.
  (4) Momentarily press the control switch is turned to SET/COAST, and then immediately release it. Check that the vehicle speed decreases by about 1.5 km/h (Tap–down function).

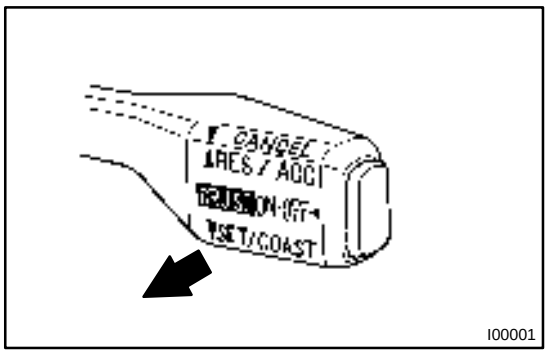

(d) Inspect the CANCEL switch.
(1) Push the main switch ON.
(2) Drive at a desired speed (40 km/h (25 mph) or higher).
(3) When operating one of the following operations, check that the cruise control system is cancelled and that the normal driving mode is reset.
- Depress the brake pedal
- Depress the clutch pedal (M/T)
- Shift to except D position (A/T)
- Turn the main switch OFF
- Pull the cruise control switch to CANCEL

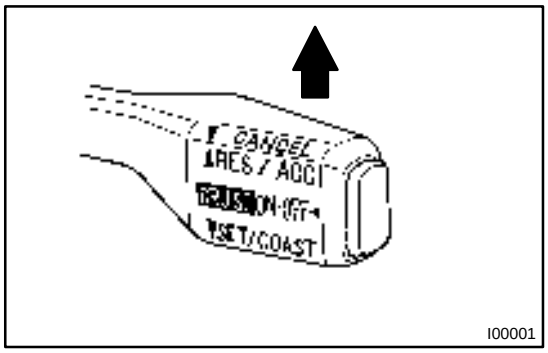

(e) Inspect the RESUME switch.
(1) Push the main switch ON.
(2) Drive at a desired speed (40 km/h (25 mph) or higher).
(3) When operating one of the following operations, check that the cruise control system is cancelled and that the normal driving mode is reset.
- Depress the brake pedal
- Depress the clutch pedal (M/T)
- Shift to except D position (A/T)
- Turn the main switch OFF
- Pull the cruise control switch to CANCEL

(4) After the control switch is turned to RES/ACC at the driving speed of more than 40 km/h (25 mph), check that the vehicle restores the speed prior to the cancellation.

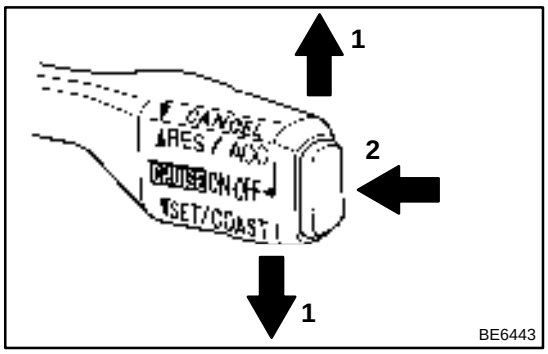

4. INPUT SIGNAL CHECK

HINT:

(1) For check No.1 ~ No.2:

Turn the ignition switch ON.

(2) For check No.3:

- Turn ignition switch ON.
- Shift to D position.

(3) For check No.4:

- Jack up the vehicle.
- Start the engine.
- Shift to D position.

(a) Press the control switch to SET/COAST or RES/ACC position and hold it down or hold it up ”1”.

(b) Press the main switch ON ”2”.

(c) Check that the CRUISE MAIN indicator light blinks twice or 3 times repeatedly after 3 seconds.

(d) Turn the SET/COAST or RES/ACC switch OFF.

(e) Operate each switch as listed in the table below.

(f) Read the blinking pattern of the CRUISE MAIN indicator light.

(g) After performing the check, turn the main switch OFF.

HINT:

When 2 or more signals are input to the ECU, the lowest numbered code will be displayed first.

No.	Operation Method	CRUISE MAIN Indicator LIght Blinking Pattern	Diagnosis
1	Turn SET/COAST switch ON	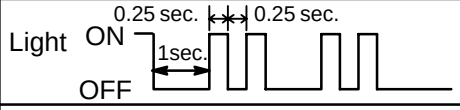	SET/COAST switch circuit is normal
2	Turn RES/ACC switch ON		RES/ACC switch circuit is normal
3	Turn CANCEL switch ON	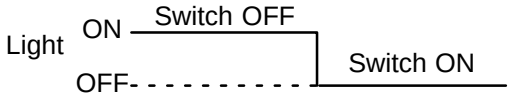	CANCEL switch circuit is normal
	Turn stop light switch ON Depress brake pedal		Stop light switch circuit is normal
	Turn Park/Neutral Position switch OFF (Shift to positions except D)	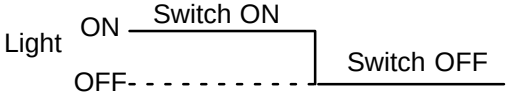	Park/Neutral Position switch circuit is normal
	Turn clutch switch OFF (Depress clutch pedal)		Clutch switch circuit is normal
4	Drive at about 40 km/h (25 mph)or higher	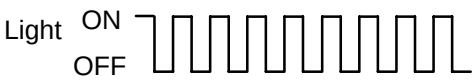	Vehicle Speed Sensor is normal
	Drive at about 40 km/h (25 mph) or below	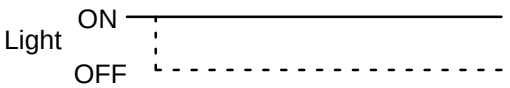	

DI18H–01

PROBLEM SYMPTOMS TABLE

Symptom	Suspect Area	See page
• SET not occurring or CANCEL occurring. (DTC is Normal)	1. Main Switch Circuit (Cruise control switch) 2. Vehicle Speed Sensor 3. Control Switch Circuit (Cruise control switch) 4. Stop Light Switch Circuit 5. PNP Switch or Clutch Switch Circuit 6. Cruise Control Actuator and ECU	DI–651 DI–626 DI–629 DI–632 DI–642 DI–645 IN–28
SET not occurring or CANCEL occurring. (DTC does not output)	1. ECU Power Source Circuit 2. Cruise Control Actuator and ECU	DI–648 IN–28
Actual vehicle speed deviates above or below the set speed.	1. Vehicle Speed Signal Abnormal 2. Electronically Controlled TransmissionCommunication Circuit 3. Idle Signal Circuit (Main throttle position sensor) 4. Cruise Control Actuator and ECU	DI–628 DI–638 DI–635 IN–28
Gear shifting frequent between 3rd O/D when driving on uphill road. (Hunting)	1. Electronically Controlled TransmissionCommunication Circuit 2. Cruise Control Actuator and ECU	DI–638 IN–28
Cruise control not cancelled, even when brake pedal is depressed.	1. Stop Light Switch Circuit 2. Cruise Control Actuator and ECU	DI–632 IN–28
Cruise control not cancelled, even when transmission is shifted to ”N” position.	1. PNP Switch Circuit 2. Cruise Control Actuator and ECU	DI–642 IN–28
Cruise control does not cancel when clutch pedal is depressed.	1. Clutch Switch Circuit 2. Cruise Control Actuator and ECU	DI–645 IN–28
Control switch dose not operate. (SET/COAST, ACC/RES, CANCEL not possible)	1. Control Switch Circuit (Cruise Control Switch) 2. Cruise Control Actuator and ECU	DI–629 IN–28
SET possible at 40km/h (25 mph) or less, or CANCEL does not operate at 40km/h (25 mph) or less.	1. Vehicle Speed Signal Abnormal 2. Cruise Control Actuator and ECU	DI–628 IN–28
Poor response in ACCEL and RESUME modes.	1. Electronically Controlled TransmissionCommunication Circuit 2. Cruise Control Actuator and ECU	DI–638 IN–28
O/D does not RESUME, even though the road is not uphill.	1. Electronically Controlled TransmissionCommunication Circuit 2. Cruise Control Actuator and ECU	DI–638 IN–28
DTC memory is erased.	1. ECU Power Souce Circuit 2. Cruise Control Actuator and ECU	DI–648 IN–28
DTC is not output, or is output when is should not be.	1. Diagnosis Circuit 2. Cruise Control Actuator and ECU	DI–655 IN–28
Cruise MAIN indicator light remains ON or fall to light up.	1. Cruise MAIN Indicator Light Switch Circuit	DI–653

DI18G–03

TERMINALS OF ECU

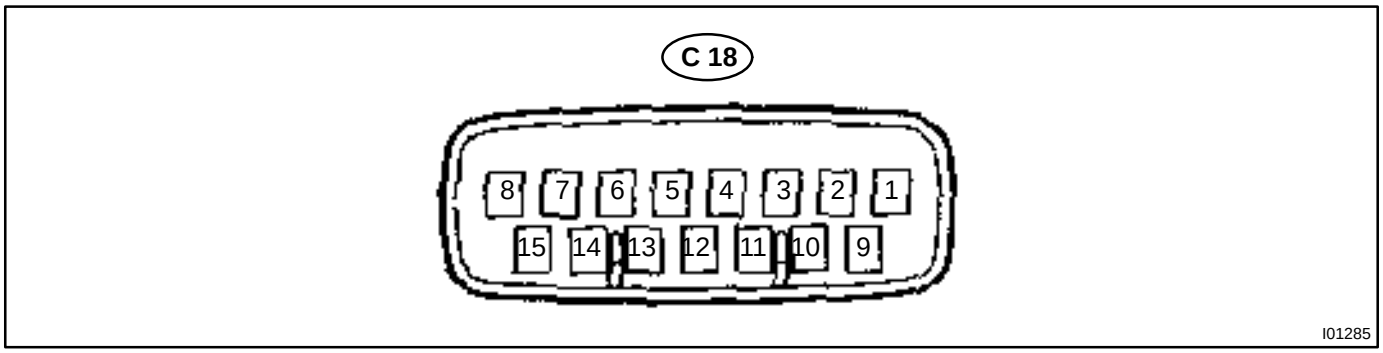

Symbols (Terminals No.)	Wiring Color	Condition	STD Voltage (V)
CMS ↔ GND (C18–15 ↔ C18–10, 9)	G–B ↔ W–B	Ignition switch ON Cruise control main switch OFF, Main indicator light OFF	min. (+B – 2 V)
		Ignition switch ON Cruise control main switch hold ON, Main indicator light ON	max. 2 V
TC ↔ GND (C18–14 ↔ C18–10, 9)	Y–B ↔ W–B	Ignition switch ON DLC1 Tc open	min. (+B – 2 V)
		Ignition switch ON DLC1 Tc ↔ E1 short	max. 2 V
D ↔ GND (C18–13 ↔ C18–10, 9)	B–W ↔ W–B	Ignition switch ON, Shift lever D position (A/T) or clutch pedal pushed in (M/T)	min. (+B – 2 V)
		Ignition switch ON, Shift lever except D position (A/T) or clutch pedal depressed (M/T)	max. 2 V
ECT ↔ GND (C18–12 ↔ C18–10, 9)	LG ↔ W–B	During cruise control driving O/D off switch OFF (3rd driving)	min. (+B – 2 V)
		During cruise control driving O/D off switch ON	max. 0.5 V
Pi ↔ GND (C18–11 ↔ C18–10, 9)	B–Y ↔ W–B	Ignition switch ON Cruise control main switch OFF, Main indicator light OFF	min. +B
		Ignition switch ON Cruise control main switch ON, Main indicator light ON	max. 1.2 V
GND ↔ Body Ground (C18–10, 9 ↔ Body Ground)	W–B ↔ Body Ground	Always	max. 1 V
IDL ↔ GND (C18–8 ↔ C18–10, 9)	LG–R ↔ W–B	Ignition switch ON Throttle valve fully opened	min. (+B – 2 V)
		Ignition switch ON Throttle valve fully closed	max. 3 V
SPD ↔ GND (C18–7 ↔ C18–10, 9)	G–O ↔ W–B	During cruise control driving (Pulse generated)	min. 3 V or min. (+B – 2 V)
		Engine start Car stoppage	min. 1.5 V
STP– ↔ GND (C18–6 ↔ C18–10, 9)	G–W ↔ W–B	Depress brake pedal	min. (+B – 2 V)
		Release brake pedal	max. 2 V
B ↔ GND (C18–4 ↔ C18–10, 9)	Y–R ↔ W–B	Ignition switch ON	min. (+B – 1.5 V)

CCS ↔ GND (C18–3 ↔ C18–10, 9)	G–Y ↔ W–B	Ignition switch ON Cruise control switch neutral position	10 – 16 V
		Ignition switch ON Cruise control switch CANCEL position hold ON	5.1 – 8.3 V
		Ignition switch ON Cruise control switch SET/COAST position hold ON	2.4 – 4.0 V
		Ignition switch ON Cruise control switch RES/ACC position hold ON	0.8 – 1.4 V
L ↔ GND (C18–2 ↔ C18–10, 9)	L–W ↔ W–B	During cruise control driving	max. +B
		Except during cruise control driving	Below 1 V
OD ↔ GND (C18–1 ↔ C18–10, 9)	R–Y ↔ W–B	During cruise control driving OD switch ON. (During on float road)	max. +B
		During cruise control driving OD switch OFF (3rd driving)	max. 1 V

DI0RM–10

DIAGNOSTIC TROUBLE CODE CHART

HINT:

Parameters listed in the chart may not be exactly the same as your reading due to the type of instrument or other factors.

If a malfunction code is displayed during the DTC check in check mode, check the circuit for the codes listed in the table below. For details of each code, turn to the page referred to under the ''See page'' for the respective ''DTC No.'' in the DTC chart.

SAE CONTROLLED

DTC No. (See page)	Detection Item	Trouble Area	MIL*1	Memory
P0100 (DI–203)	Mass Air Flow Circuit Malfunction	• Open or short in mass air flow meter circuit • Mass air flow meter • ECM	○	○
P0101 (DI–208)	Mass Air Flow Circuit Range/Performance Problem	• Mass air flow meter	○	○
P0110 (DI–209)	Intake Air Temp. Circuit Malfunction	• Open or short in intake air temp. sensor circuit • Intake air temp. sensor (built into mass air flow meter) • ECM	○	○
P0115 (DI–213)	Engine Coolant Temp. Circuit Malfunction	• Open or short in engine coolant temp. sensor circuit • Engine coolant temp. sensor • ECM	○	○
P0116 (DI–217)	Engine Coolant Temp. Circuit Range/Performance Problem	• Cooling system • Engine coolant temp. sensor	○	○
P0120 (DI–219)	Throttle/Pedal Position Sensor/Switch ''A'' Circuit Malfunction	• Open or short in throttle position sensor circuit • Throttle position sensor • ECM	○	○
P0121 (DI–223)	Throttle/Pedal Position Sensor/Switch ''A'' Circuit Range/Performance Problem	• Throttle position sensor	○	○
P0125 (DI–224)	Insufficient Coolant Temp. for Closed Loop Fuel Control (California Spec.)	• Open or short in A/F sensor (bank 1 sensor 1) circuit • A/F sensor (bank 1 sensor 1) • Air induction system • Fuel pressure • Injector • Gas leakage of exhaust system • ECM	○	○
P0125 (DI–229)	Insufficient Coolant Temp. for Closed Loop Fuel Control (Except California Spec.)	• Open or short in heated oxygen sensor (bank 1 sensor 1) circuit • Heated oxygen sensor (bank 1 sensor 1) • Air induction system • Fuel pressure • Injector • Gas leakage of exhaust system • ECM	○	○
P0130 (DI–234)	Oxygen Sensor Circuit Malfunction (Bank 1 Sensor 1) (Except California Spec.)	• Open or short in heated oxygen sensor circuit • Heated oxygen sensor • Air induction system • Fuel pressure • Injector • ECM	○	○

P0133 (DI–238)	Oxygen Sensor Circuit Slow Response (Bank 1 Sensor 1) (Except California Spec.)	• Open or short in heated oxygen sensor circuit • Heated oxygen sensor • Air induction system • Fuel pressure • Injector • ECM	○	○
P0135 (DI–241)	Oxygen Sensor Heater Circuit Malfunction (Bank 1 Sensor 1) (Except California Spec.)	• Open or short in heater circuit of heated oxygen sensor • Heated oxygen sensor • ECM	○	○
P0136 (DI–243)	Oxygen Sensor Circuit Malfunction (Bank 1 Sensor 2)	• Open or short in heated oxygen sensor circuit • Heated oxygen sensor	○	○
P0141 (DI–241)	Oxygen Sensor Heater Circuit Malfunction (Bank 1 Sensor 2)	• Same as DTC No. P0135	○	○
P0171 (DI–245)	System too Lean (Fuel Trim) (California Spec.)	• Air induction system • Injector blockage • Mass air flow meter • Engine coolant temp. sensor • Fuel pressure • Gas leakage on exhaust system • Open or short in A/F sensor (Bank 1 sensor 1) circuit • A/F sensor (bank 1 sensor 1) • ECM	○	○
P0172 (DI–245)	System too Rich (Fuel Trim) (California Spec.)	• Injector leak, blockage • Mass air flow meter • Engine coolant temp. sensor • Ignition system • Fuel pressure • Gas leakage on exhaust system • Open or short in A/F sensor (bank 1 sensor 1) circuit • A/F sensor (bank 1 sensor 1) • ECM	○	○
P0171 (DI–250)	System too Lean (Fuel Trim) (Except California Spec.)	• Air induction system • Injector blockage • Mass air flow meter • Engine coolant temp. sensor • Fuel pressure • Gas leakage on exhaust system • Open or short in heated oxygen sensor (Bank 1 sensor 1) circuit • Heated oxygen sensor (bank 1 sensor 1) • ECM	○	○
P0172 (DI–250)	System too Rich (Fuel Trim) (Except California Spec.)	• Injector leak, blockage • Mass air flow meter • Engine coolant temp. sensor • Ignition system • Fuel pressure • Gas leakage on exhaust system • Open or short in heated oxygen sensor (bank 1 sensor 1) circuit • Heated oxygen sensor (bank 1 sensor 1) • ECM	○	○

P0300 (DI–254)	Random/Multiple Cylinder Misfire Detected	• Open or short engine wire • Connector connection • Vacuum hose connection • Ignition system • Injector • Fuel pressure • Mass air flow meter • Engine coolant temp. sensor • Compression pressure • Valve clearance • Valve timing • ECM	○*2	○
P0301 (DI–254)	Cylinder 1 Misfire Detected			
P0302 (DI–254)	Cylinder 2 Misfire Detected			
P0303 (DI–254)	Cylinder 3 Misfire Detected			
P0304 (DI–254)	Cylinder 4 Misfire Detected			
P0305 (DI–254)	Cylinder 5 Misfire Detected			
P0306 (DI–254)	Cylinder 6 Misfire Detected			
P0325 (DI–260)	Knock Sensor 1 Circuit Malfunction (Bank 1)	• Open or short in knock sensor 1 circuit • Knock sensor 1 (looseness) • ECM	○	○
P0330 (DI–260)	Knock Sensor 2 Circuit Malfunction (Bank 2)	• Open or short in knock sensor 2 circuit • Knock sensor 2 (looseness) • ECM	○	○
P0335 (DI–263)	Crankshaft Position Sensor ”A” Circuit Malfunction	• Open or short in crankshaft position sensor circuit • Crankshaft position sensor • Crankshaft timing pulley • ECM	○	○
P0340 (DI–265)	Camshaft Position Sensor Circuit Malfunction	• Open or short in camshaft position sensor circuit • Camshaft position sensor • RH camshaft timing pulley • ECM	○	○
P0420 (DI–267)	Catalyst System Efficiency Below Threshold (Bank 1) (California Spec.)	• Gas leakage on exhaust system • A/F sensor (bank 1 sensor 1) • Heated oxygen sensor (bank 1 sensor 2) • Three–way catalytic converter	○	○
P0420 (DI–270)	Catalyst System Efficiency Below Threshold (Bank 1) (Except California Spec.)	• Gas leakage on exhaust system • Heated oxygen sensor • Three–way catalytic converter	○	○
P0440 (DI–273)	Evaporative Emission Control System Malfunction	• Hose or tube cracked, holed, damaged or loose seal • Fuel tank cap incorrectly installed • Fuel tank cap cracked or damaged • Vacuum hose cracked, holed, blocked, damaged or disconnected • Fuel tank cracked, holed or damaged • Charcoal canister cracked, holed or damaged • Open or short in vapor pressure sensor circuit • Vapor pressure sensor • ECM	○	○

P0441 (DI–280)	Evaporative Emission Control System Incorrect Purge Flow	• Vacuum hose cracked, holed, blocked, damaged or disconnected • Open or short in vapor pressure sensor circuit • Vapor pressure sensor • Open or short in VSV circuit for EVAP • VSV for EVAP • Open or short in VSV circuit for vapor pressure sensor • VSV for vapor pressure sensor • Charcoal canister cracked, holed or damaged • ECM	○	○
P0446 (DI–280)	Evaporative Emission Control System Vent Control Malfunction		○	○
P0450 (DI–292)	Evaporative Emission Control System Pressure Sensor Malfunction	• Open or short in vapor pressure sensor circuit • Vapor pressure sensor • ECM	○	○
P0451 (DI–292)	Evaporative Emission Control System Pressure Sensor Range/ Performance			
P0500 (DI–294)	Vehicle Speed Sensor Malfunction	• Open or short in speed signal circuit • Combinationmeter • ECM • Open or short in speed sensor circuit for ABS • ABS ECU	○	○
P0505 (DI–297)	Idle Control System Malfunction	• Open or short in IAC valve circuit • IAC valve is stuck or closed • Open or short in A/C signal circuit • Air induction system • ECM	○	○

*1: MIL lights up.

*2: MIL lights up or blinking.

MANUFACTURER CONTROLLED

DTC No. (See page)	Detection Item	Trouble Area	MIL*	Memory
P1130 (DI–301)	A/F Sensor Circuit Range/Performance Malfunction (Bank 1 Sensor 1) (California Spec.)	• Open or short in A/F sensor circuit • A/F sensor • Air induction system • Fuel pressure • Injector • ECM	○	○
P1133 (DI–306)	A/F Sensor Circuit Response Malfunction (Bank 1 Sensor 1) (California Spec.)	• Open or short in A/F sensor circuit • A/F sensor • Air induction system • Fuel pressure • Injector • ECM	○	○
P1135 (DI–310)	A/F Sensor Heater Circuit Malfunction (Bank1 Sensor 1) (California Spec.)	• Open or short in heater circuit of A/F sensor • A/F sensor heater • ECM	○	○
P1300 (DI–312)	Igniter Circuit Malfunction	• Ignition system • Open or short in IGF or IGT circuit from igniter to ECM • Igniter • Ignition coil • ECM	○	○
P1335 (DI–318)	Crankshaft Position Sensor Circuit Malfunction (During engine running)	• Open or short in crankshaft position sensor circuit • Crankshaft position sensor • Crankshaft timing pulley • ECM	–	○

P1520 (DI–319)	Stop Light Switch Signal Malfunction (Only for A/T)	• Short in stop light switch signal circuit • Stop light switch • ECM	○	○
P1600 (DI–322)	ECM BATT Malfunction	• Open in back up power source circuit • ECM	○	○
P1700 (DI–385)	Vehicle Speed Sensor No.2 Malfunction (No.2 Vehicle Speed Sensor)	• Open or short in No.2 vehicle speed sensor circuit • No.2 vehicle speed sensor • ECM	○	○
P1780 (DI–325)	Park/Neutral Position Switch Malfunction (Only for A/T)	• Short in park/neutral position switch circuit • Park/neutral position switch • ECM	○	○

*: – • • • MIL does not light up. ○ • • • MIL lights up.

ENGINE (5VZ–FE)

DI0RJ–08

HOW TO PROCEED WITH TROUBLESHOOTING

Troubleshoot in accordance with the procedure on the following page.

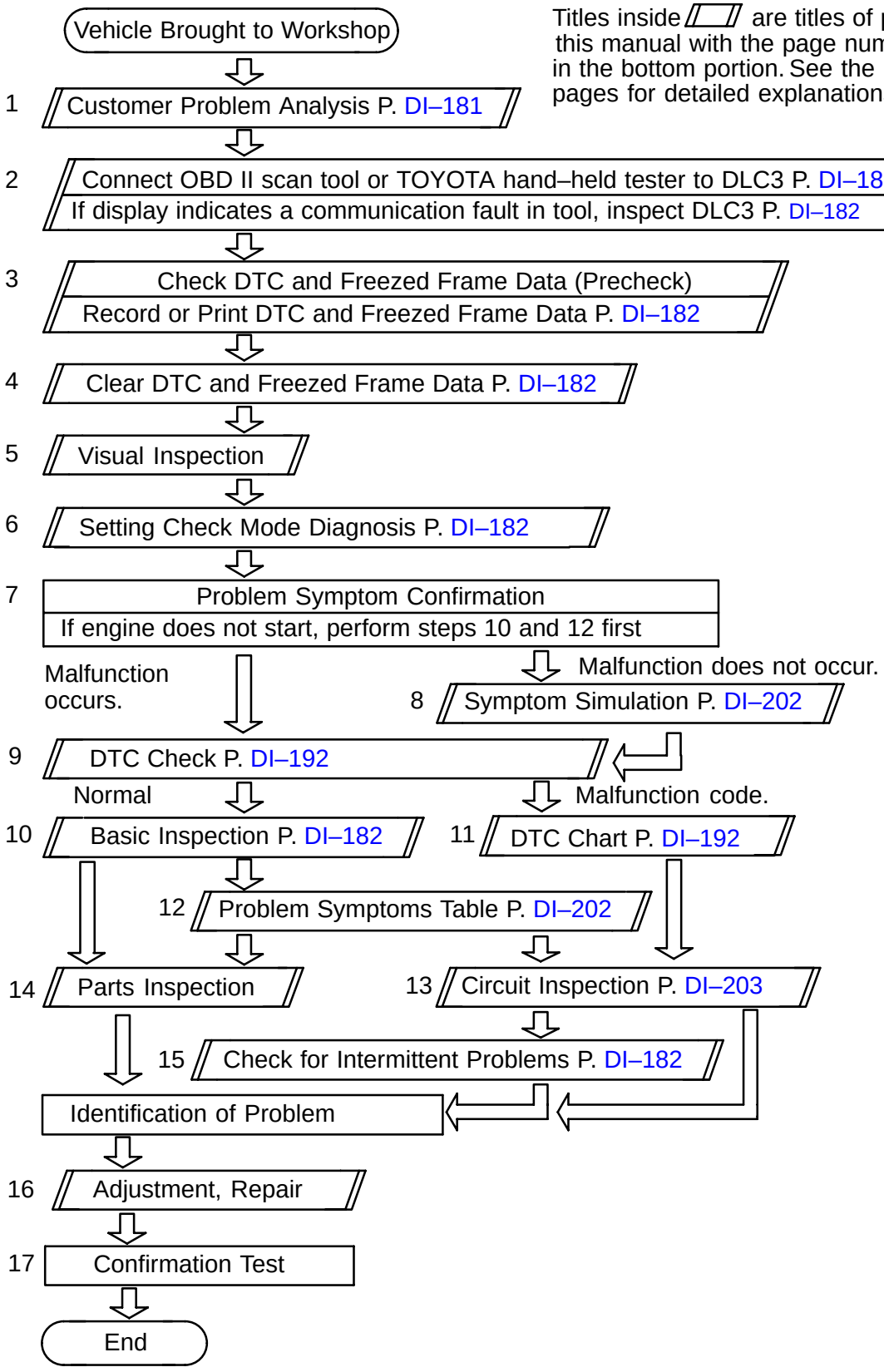

DI0RN–09

PARTS LOCATION

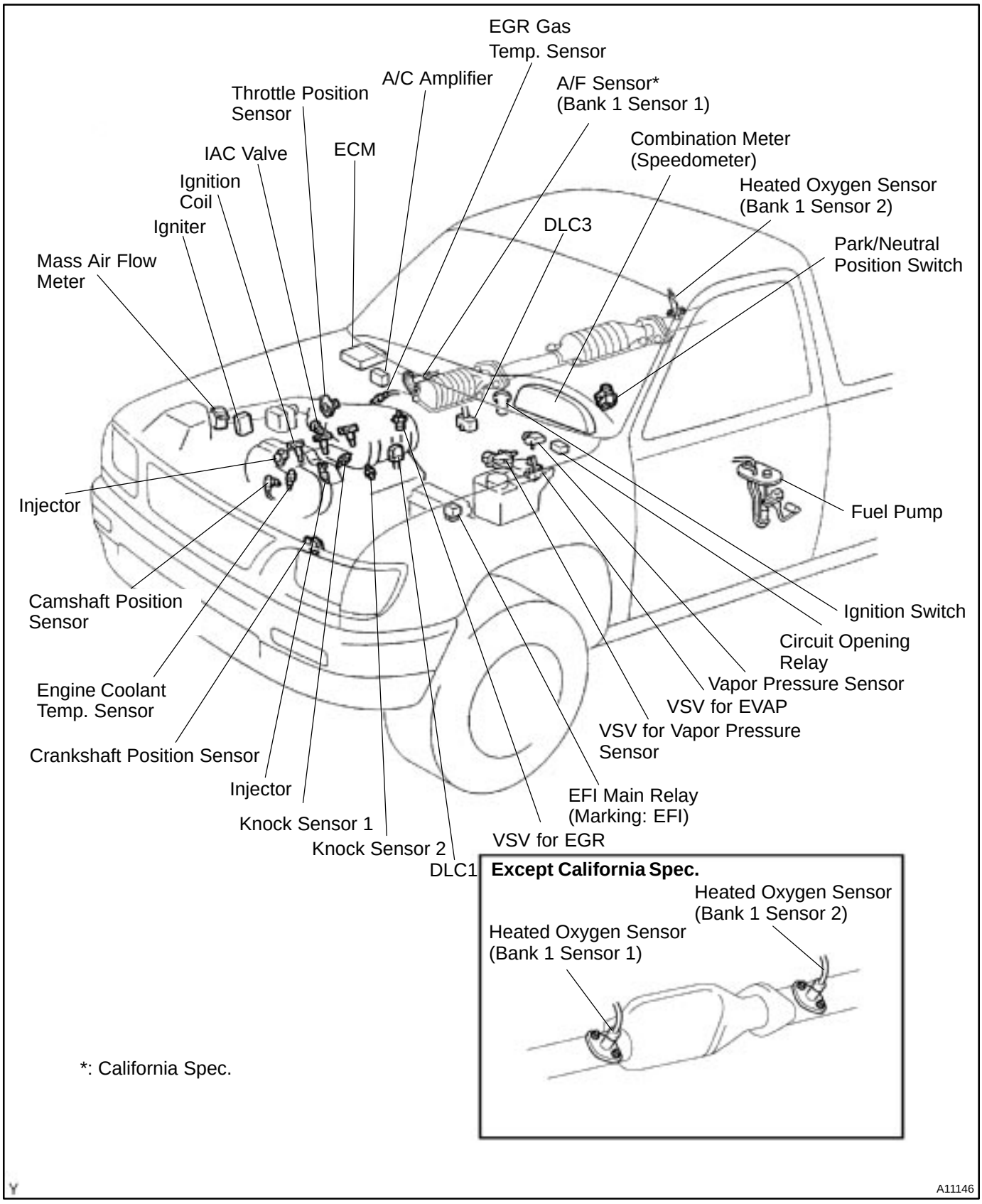

A11146

DI0RL–10

PRE–CHECK

1. DIAGNOSIS SYSTEM

(a) Description

- When troubleshooting OBD II vehicles, the only difference from the usual troubleshooting procedure is that you connect the vehicle to the OBD II scan tool complying with SAE J1978 or TOYOTA hand–held tester, and read off various data output from the vehicle's ECM.

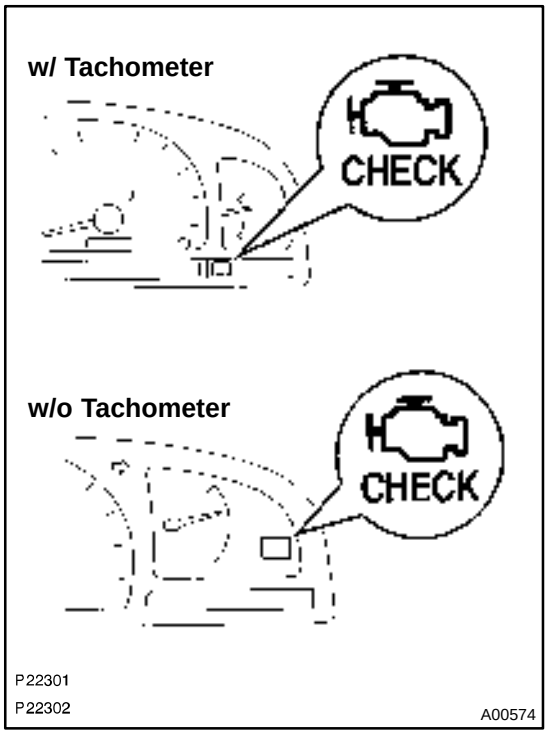

- OBD II regulations require that the vehicle's on–board computer lights up the Malfunction Indicator Lamp (MIL) on the instrument panel when the computer detects a malfunction in the emission control system/components or in the powertrain control components which affect vehicle emissions, or a malfunction in the computer. In addition to the MIL lighting up when a malfunction is detected, the applicable Diagnostic Trouble Codes (DTCs) prescribed by SAE J2012 are recorded in the ECM memory (See page DI–192).

If the malfunction does not reoccur in 3 consecutive trips, the MIL goes off automatically but the DTCs remain recorded in the ECM memory.

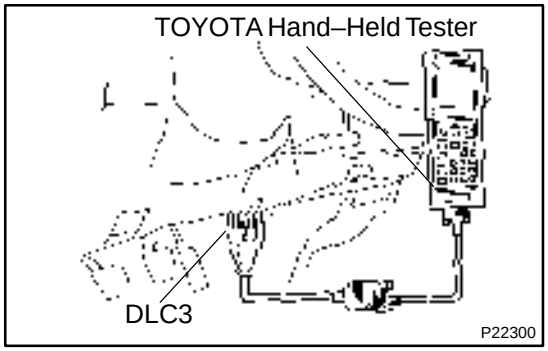

- To check the DTCs, connect the OBD II scan tool or TOYOTA hand–held tester to the Data Link Connector 3 (DLC3) on the vehicle. The OBD II scan tool or TOYOTA hand–held tester also enables you to erase the DTCs and check freezed frame data and various forms of engine data. (For operating instructions, see the OBD II scan tool's instruction book.)

  DTCs include SAE controlled codes and manufacturer controlled codes. SAE controlled codes must be set as prescribed by the SAE, while manufacturer controlled codes can be set freely by the manufacturer within the prescribed limits (See DTC chart on page DI–192).

- The diagnosis system operates in normal mode during normal vehicle use. It also has a check mode for technicians to simulate malfunction symptoms and troubleshoot. Most DTCs use 2 trip detection logic* to prevent erroneous detection, and ensure thorough malfunction detection. By switching the ECM to check mode when troubleshooting, the technician can cause the MIL to light up for a malfunction that is only detected once or momentarily. (TOYOTA hand–held tester only) (See step 2)
- *2 trip detection logic:
  When a malfunction is first detected, the malfunction is temporarily stored in the ECM memory. (1st trip)

If the same malfunction is detected again during the second drive test, this second detection causes the MIL to light up. (2nd trip) (However, the ignition switch must be turned OFF between the 1st trip and 2nd trip.)

- Freeze frame data:
  Freeze frame data records the engine condition when a misfire (DTCs P0300) or fuel trim malfunction (DTCs P0171 and P0172) or other malfunction (first malfunction only), is detected.
  Because freeze frame data records the engine conditions (fuel system, calculated load, engine coolant temperature, fuel trim, engine speed, vehicle speed, etc.) when the malfunction is detected. When troubleshooting, it is useful for determining whether the vehicle was running or stopped, the engine was warmed up or not, the air–fuel ratio was lean or rich, etc. at the time of the malfunction.

Priorities for troubleshooting:

If troubleshooting priorities for multiple DTCs are given in the applicable DTC chart, these should be followed.

If no instructions are given, troubleshoot DTCs according to the following priorities.

(1) DTCs other than fuel trim malfunction (DTCs P0171 and P0172) and misfire (DTCs P0300).
(2) Fuel trim malfunction (DTCs P0171 and P0172).
(3) Misfire (DTCs P0300).

(b) Check the DLC3.

The vehicle's ECM uses the ISO 9141–2 communication protocol. The terminal arrangement of DLC3 complies with SAE J1962 and matches the ISO 9141–2 format.

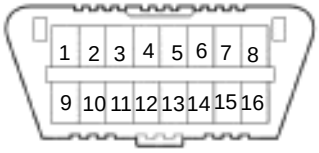

DLC3

A04550

Terminal No.	Connection/Voltage or Resistance	Condition
7	Bus (+) Line/Pulse generation	During transmission
4	Chassis Ground ↔ Body Ground/1 Ω or less	Always
5	Signal Ground ↔ Body Ground/1 Ω or less	Always
16	Battery Positive ↔ Body Ground/9 – 14 V	Always

HINT:
If your display shows UNABLE TO CONNECT TO VEHICLE when you have connected the cable of the OBD II scan tool or TOYOTA hand–held tester to the DLC3, turned the ignition switch ON and operated the scan tool, there is a problem on the vehicle side or tool side.

- If communication is normal when the tool is connected to another vehicle, inspect the DLC3 on the original vehicle.
- If communication is still not possible when the tool is connected to another vehicle, the problem is probably in the tool itself, so consult the Service Department listed in the tool's instruction manual.

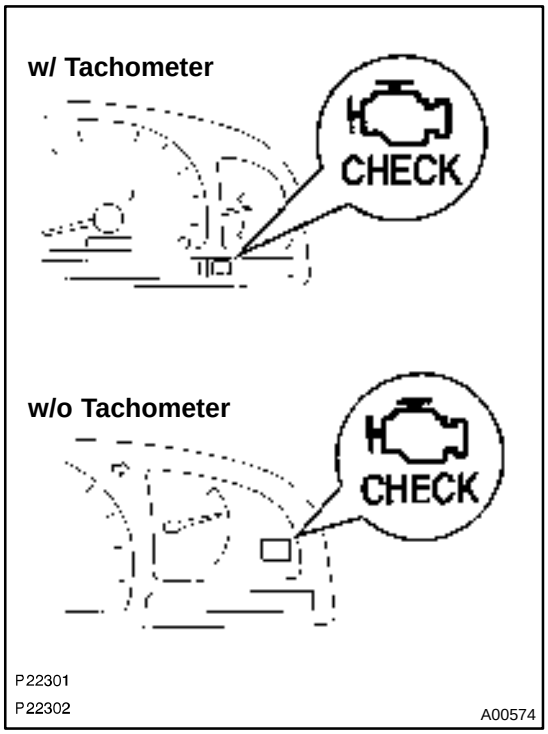

2. INSPECT DIAGNOSIS (Normal Mode)

(a) Check the MIL.

(1) The MIL comes on when the ignition switch is turned ON and the engine is not running.

HINT:
If the MIL does not light up, troubleshoot the combination meter (See page BE–38).

(2) When the engine started, the MIL should go off. If the lamp remains on, the diagnosis system has detected a malfunction or abnormality in the system.

(b) Check the DTC.

NOTICE:

- **If there is no DTC in normal mode, check the 1st trip DTC using Continuous Test Results function (Mode 7 for SAE J1979) or the OBD II scan tool or TOYOTA hand–held tester.**
- **TOYOTA hand–held tester only:**
  When the diagnosis system is switched from normal mode to check mode, it erases all DTCs and freezed frame data recorded in normal mode. So before switching modes, always check the DTCs and freezed frame data, and note them down.

(1) Prepare the OBD II scan tool (complying with SAE J1978) or TOYOTA hand–held tester.

(2) Connect the OBD II scan tool or TOYOTA hand–held tester to the DLC3 at the lower left of the instrument panel.

(3) Turn the ignition switch ON and push the OBD II scan tool or TOYOTA hand–held tester switch ON.

(4) Use the OBD II scan tool or TOYOTA hand–held tester to check the DTCs and freezed frame data and note them down. (For operating instructions, see the OBD II scan tool's instruction book.)

If there is no DTC in normal mode, check the 1st trip DTC using Continuous Test Results function (Mode 7 for SAE J1979) on the OBD II scan tool or TOYOTA hand–held tester.

(5) See page DI–192 to confirm the details of the DTCs.

NOTICE:

- **When simulating symptoms with an OBD II scan tool (excluding TOYOTA hand–held tester) to check the DTCs, use normal mode. For code on the DTC chart subject to "2 trip detection logic", perform the following either action.**
- **Turn the ignition switch OFF after the symptom is simulated the first time. Then repeat the simulation process again. When the problem has been simulated twice, the MIL lights up and the DTCs are recorded in the ECM.**
- **Check the 1st trip DTC using Mode 7 (Continuous Test Results) for SAE J1979.**

(c) Clear the DTC.

The DTCs and freezed frame data will be erased by either action.

- Operating the OBD II scan tool (complying with SAE J1978) or TOYOTA hand–held tester to erase the codes. (See the OBD II scan tool's instruction book for operating instructions.)
- Disconnecting the battery terminals or EFI fuse.

NOTICE:

If the TOYOTA hand–held tester switches the ECM from normal mode to check mode or vice–versa, or if the ignition switch is turned from ON to ACC or OFF during check mode, the DTCs and freezed frame data will be erased.

3. INSPECT DIAGNOSIS (Check Mode)

TOYOTA hand–held tester only:

Compared to the normal mode, the check mode has an increased sensitivity to detect malfunctions.

Furthermore, the same diagnostic items which are detected in the normal mode can also be detected in the check mode.

(a) Check the DTC.

(1) Initial conditions

- Battery positive voltage 11 V or more
- Throttle valve fully closed
- Transmission in P or N position
- Air conditioning switched OFF

(2) Turn ignition switch OFF.

(3) Prepare the TOYOTA hand–held tester.

(4) Connect the TOYOTA hand–held tester to the DLC3 at the lower left of the instrument panel.
(5) Turn the ignition switch ON and push the TOYOTA hand–held tester switch ON.

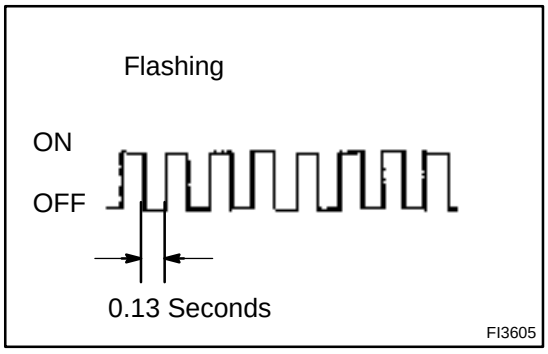

(6) Switch the TOYOTA hand–held tester from the normal mode to the check mode. (Check that the MIL flashes.)

NOTICE:

If the TOYOTA hand–held tester switches the ECM from normal mode to check mode or vice–versa, or if the ignition switch is turned from ON to ACC or OFF during check mode, the DTCs and freezed frame data will be erased.

(7) Start the engine. (The MIL goes out after the engine start.)
(8) Simulate the conditions of the malfunction described by the customer.

NOTICE:

Leave the ignition switch ON until you have checked the DTCs, etc.

(9) After simulating the malfunction conditions, use the TOYOTA hand–held tester diagnosis selector to check the DTCs and freezed frame data, etc.

HINT:

Take care not to turn the ignition switch OFF. Turning the ignition switch OFF switches the diagnosis system from check mode to normal mode. so all DTCs, etc. are erased.

(10) After checking the DTC, inspect the applicable circuit.

4. FAIL–SAFE CHART

If any of the following codes is recorded, the ECM enters fail–safe mode.

DTC No.	Fail–Safe Operation	Fail–Safe Deactivation Conditions
P0100	Ignition timing fixed at 10° BTDC	Returned to normal condition
P0110	Intake air temperature is fixed at 20°C (68°F)	Returned to normal condition
P0115	Engine coolant temperature is fixed at 80°C (176°F)	Returned to normal condition
P0120	VTA is fixed at 0°	The following condition must be repeated at least 2 times consecutively VTA ≧ 0.1 V and ≦ 0.95 V
P0135 P0141	The heater circuit in which an abnormality is detected is turned off	Ignition switch OFF
P0325 P0330	Max. timing retardation	Ignition switch OFF
P0340	Fuel cut	Returned to normal condition
P1300	Fuel cut	Returned to normal condition

5. CHECK FOR INTERMITTENT PROBLEMS

TOYOTA hand–held tester only:

By putting the vehicle's ECM in check mode, 1 trip detection logic is possible instead of 2 trip detection logic and sensitivity to detect open circuits is increased. This makes it easier to detect intermittent problems.

(1) Clear the DTCs (See step 2).
(2) Set the check mode (See step 3).
(3) Perform a simulation test (See page IN–18).
(4) Check the connector and terminal (See page IN–28).
(5) Handle the connector (See page IN–28).

6. BASIC INSPECTION

When the malfunction code is not confirmed in the DTC check, troubleshooting should be performed in order for all possible circuits to be considered as the cause of the problems. In many cases, by carrying out the basic engine check shown in the following flow chart, the location causing the problem can be found quickly and efficiently. Therefore, use of this check is essential in engine troubleshooting.

1	**Is battery positive voltage 11 V or more when engine is stopped?**

NO → **Charge or replace battery.**

YES

2	**Is engine cranked?**

NO → **Proceed to pages ST–16, ST–18, and continue to troubleshoot.**

YES

3	**Does engine start?**

NO → **Go to step 7.**

YES

4	Check air filter.

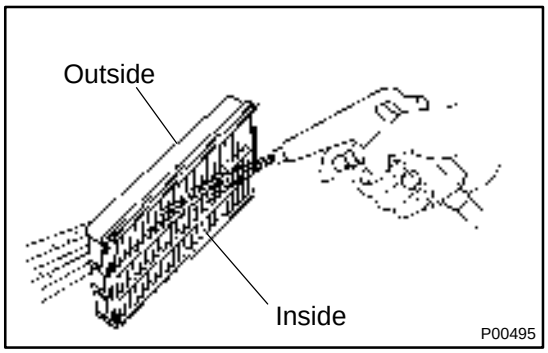

PREPARATION:
Remove the air filter.
CHECK:
Visually check that the air filter is not dirty or excessive oily.
HINT:
If necessary, clean the air filter with compressed air. First blow from inside thoroughly, then blow from outside of the air filter.

NG → **Repair or replace.**

OK ↓

5	Check idle speed.

PREPARATION:
(a) Warm up the engine to normal operating temperature.
(b) Switch off all the accessories.
(c) Switch off the A/C.
(d) Shift transmission into the N position.
(e) Connect the OBD II scan tool or TOYOTA hand–held tester to the DLC3 on the vehicle.

CHECK:
Use the CURRENT DATA to check the idle speed.

OK:
Idle speed: 650 – 750 rpm

NG → **Proceed to problem symptoms table on page DI–202.**

OK ↓

6	Check ignition timing.

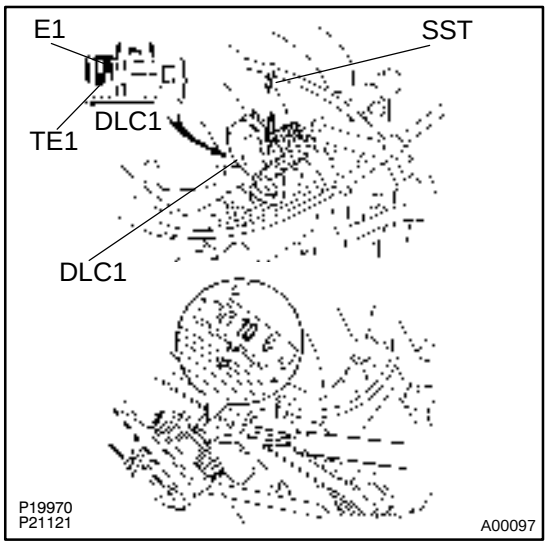

PREPARATION:

(a) Warm up the engine to normal operating temperature.
(b) Shift the transmission into the N position.
(c) Keep the engine speed at idle.
(d) Using SST, connect terminals TE1 and E1 of the DLC1.
SST 09843–18020
(e) Using a timing light, connect the tester to the No.1 high–tension cord.

CHECK:

Check ignition timing.

OK:

Ignition timing: 8 – 12˚ BTDC at idle

NG → **Proceed to page IG–1, and continue to trouble-shoot.**

OK

Proceed to problem symptoms table on page DI–202.

7	Check fuel pressure.

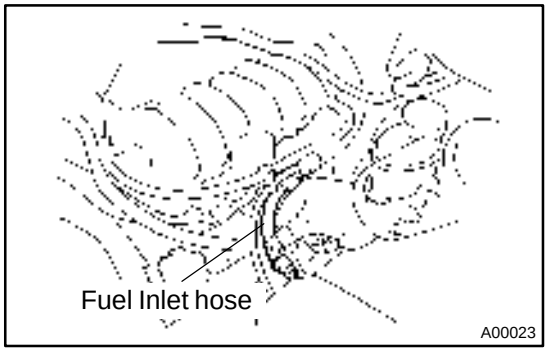

PREPARATION:

(a) Be sure that enough fuel is in the tank.
(b) Connect the TOYOTA hand–held tester to the DLC3.
(c) Turn the ignition switch ON and push the TOYOTA hand–held tester main switch ON.
(d) Use the ACTIVE TEST mode to operate the fuel pump.
(e) Please refer to the TOYOTA hand–held tester operator's manual for further details.
(f) If you have no TOYOTA hand–held tester, connect the positive (+) and negative (–) leads from the battery to the fuel pump connector (See page SF–5).

CHECK:

Check for fuel pressure in the fuel inlet hose when it is pinched off.

HINT:

At this time, you will hear a fuel flowing noise.

NG → **Proceed to page SF–5, and continue to trouble-shoot.**

OK

8	Check for spark.

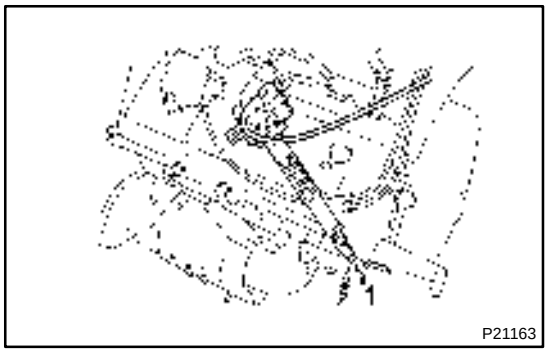

PREPARATION:

(a) Remove the ignition coil or disconnect the high–tension cord from spark plug.
(b) Remove the spark plug.
(c) Install the spark plug to the ignition coil or high–tension cord.
(d) Disconnect the injector connector.
(e) Ground the spark plug.

CHECK:

Check if spark occurs while the engine is being cranked.

NOTICE:

To prevent excess fuel from being injected from the injectors during this test, don't crank the engine for more than 5 – 10 seconds at a time.

NG → **Proceed to page IG–1, and continue to troubleshoot.**

OK

Proceed to problem symptoms table on page DI–202.

7. ENGINE OPERATING CONDITION

NOTICE:

The values given below for "Normal Condition" are representative values, so a vehicle may still be normal even if its value varies from those listed here. So do not decide whether a part is faulty or not solely according to the "Normal Condition" here.

(a) CARB mandated signals.

TOYOTA hand–held tester display	Measurement Item	Normal Condition*
FUEL SYS #1	Fuel System Bank 1 OPEN: Air–fuel ratio feedback stopped CLOSED: Air–fuel ratio feedback operating	Idling after warming up: CLOSED
CALC LOAD	Calculator Load: Current intake air volume as a proportion of max. intake air volume	Idling: 14.9 – 21.3 % Racing without load (2,500rpm): 16.6 – 23.5 %
COOLANT TEMP	Engine Coolant Temp. Sensor Value	After warming up: 80 – 95°C (176 – 203°F)
SHORT FT #1	Short–term Fuel Trim Bank 1	0 ± 20 %
LONG FT #1	Long–term Fuel Trim Bank 1	0 ± 20 %
ENGINE SPD	Engine Speed	Idling: 650 – 750 rpm
VEHICLE SPD	Vehicle Speed	Vehicle stopped: 0 km/h (0 mph)

IGN ADVANCE	Ignition Advance: Ignition Timing of Cylinder No.1	Idling: BTDC 12.5 – 22.0°
INTAKE AIR	Intake Air Temp. Sensor Value	Equivalent to ambient temp.
MAF	Air Flow Rate Through Mass Air Flow Meter	Idling: 3.3 – 4.7 gm/sec. Racing without load (2,500 rpm): 12.9 – 18.3 gm/sec.
THROTTLE POS	Voltage Output of Throttle Position Sensor Calculated as a percentage: 0 V → 0 %, 5 V → 100 %	Throttle valve fully closed: 7 – 11 % Throttle valve fully open: 65 – 75 %
O2S B1 S1	Voltage Output of Oxygen Sensor Bank 1 Sensor 1	Idling: 0.1 – 0.9 V
O2FT B1 S1	Oxygen Sensor Fuel Trim Bank 1 Sensor 1 (Same as SHORT FT #1)	0 ± 20 %
O2S B1 S2	Voltage Output of Oxygen Sensor Bank 1 Sensor 2	Driving 50 km/h (31 mph): 0.1 – 0.9 V

*: If no conditions are specifically stated for ”Idling”, it means the shift lever is at N or P position, the A/C switch is OFF and all accessory switches are OFF.

(b) TOYOTA Enhanced Signals.

TOYOTA hand–held tester display	Measurement Item	Normal Condition*
MISFIRE RPM	Engine RPM for first misfire range	Misfire 0: 0 rpm
MISFIRE LOAD	Engine load for first misfire range	Misfire 0: 0 g/r
INJECTOR	Fuel injection time for cylinder No.1	Idling: 1.82 – 3.15 ms
IAC DUTY RATIO	Intake Air Control Valve Duty Ratio Opening ratio rotary solenoid type IAC valve	Idling: 22 – 46 %
STARTER SIG	Starter Signal	Cranking: ON
A/C SIG	A/C Switch Signal	A/C ON: ON
PNP SW	Park/Neutral Position Switch Signal	P or N position: ON
STOP LIGHT SW	Stop Light Switch Signal	Stop light switch ON: ON
FC IDL	Fuel Cut Idle: Fuel cut when throttle valve fully closed, during deceleration	Fuel cut operating: ON
FC TAU	Fuel Cut TAU: Fuel cut during very light load	Fuel cut operating: ON
CYL#1 – CYL#6	Abnormal revolution variation for each cylinder	0 %
IGNITION	Total number of ignition for every 1,000 revolutions	0 – 3,000
A/C CUT SIG	A/C Cut Signal	A/C S/W OFF: ON
FUEL PUMP	Fuel Pump Signal	Idling: ON
EVAP (PURGE) VSV	EVAP VSV Signal	VSV operating: ON
VAPOR PRESS VSV	Vapor Pressure VSV Signal	VSV operating: ON
TOTAL FT B1	Total Fuel Trim Bank 1: Average value for fuel trim system of bank 1	Idling: 0.8 – 1.2 V
O2 LR B1 S1	Oxygen Sensor Lean Rich Bank 1 Sensor 1: Response time for oxygen sensor output to switch from lean to rich	Idling after warming up: 0 – 1,000 msec.
O2 RL B1 S1	Oxygen Sensor Rich Lean Bank 1 Sensor 1: Response time for oxygen sensor output to switch from rich to lean	Idling after warming up: 0 – 1,000 msec.

*: If no conditions are specifically stated for ”Idling”, it means the shift lever is at N or P position, the A/C switch is OFF and all accessory switches are OFF.

DI0RP–08

PROBLEM SYMPTOMS TABLE

Symptom	Suspect Area	See page
Engine does not crank (Does not start)	3. Starter 4. Starter relay	ST–16 ST–18
No initial combustion (Does not start)	1. ECM power source circuit 2. Fuel pump control circuit 3. ECM	DI–329 DI–333 IN–28
No complete combustion (Does not start)	1. Fuel pump control circuit	DI–333
Engine cranks normally (Difficult to start)	1. Starter signal circuit 2. Fuel pump control circuit 3. Compression	DI–326 DI–333 EM–3
Cold engine (Difficult to start)	1. Starter signal circuit 2. Fuel pump control circuit	DI–326 DI–333
Hot engine (Difficult to start)	1. Starter signal circuit 2. Fuel pump control circuit	DI–326 DI–333
High engine idle speed (Poor idling)	1. A/C signal circuit (Compressor circuit) 2. ECM power source circuit	AC–80 DI–329
Low engine idle speed (Poor idling)	1. A/C signal circuit (Compressor circuit) 2. Fuel pump control circuit	AC–80 DI–333
Rough idling (Poor idling)	1. Compression 2. Fuel pump control circuit	EM–3 DI–333
Hunting (Poor idling)	1. ECM power source circuit 2. Fuel pump control circuit	DI–329 DI–333
Hesitation/Poor acceleration (Poor driveability)	1. Fuel pump control circuit 2. A/T faulty	DI–333 DI–363
Surging (Poor driveability)	1. Fuel pump control circuit	DI–333
Soon after starting (Engine stall)	1. Fuel pump control circuit	DI–333
During A/C operation (Engine stall)	1. A/C signal circuit (Compressor circuit) 2. ECM	AC–80 IN–28

DI6WG–01

TERMINALS OF ECM

California Spec.:

ECM Terminals

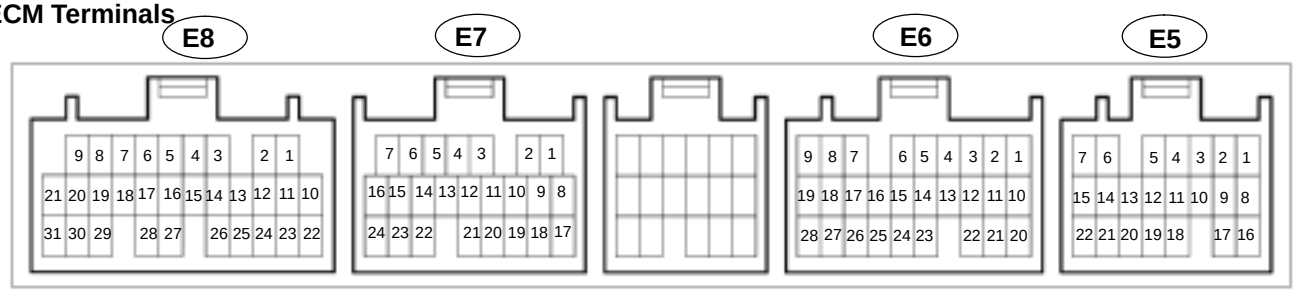

Symbols (Terminal No.)	Wiring Color	Condition	STD Voltage (V)
BATT (E5–1) – E1 (E7–17)	B–Y ↔ BR	Always	9 – 14
+B (E5–16) – E1 (E7–17)	W–R ↔ BR	IG switch ON	9 – 14
VC (E7–2) – E2 (E7–18)	G–B ↔ BR–B	IG switch ON	4.5 – 5.5
VTA (E7–23) – E2 (E7–18)	Y ↔ B	IG switch ON, Throttle valve fully closed	0.3 – 1.0
		IG switch ON, Throttle valve fully open	3.2 – 4.9
VG (E7–10) – E2G (E7–19)	GR–R ↔ B–L	Idling, A/C switch OFF	1.1 – 1.5
THA (E7–22) – E2 (E7–18)	Y–G ↔ BR–B	Idling, Intake air temp. 20˚C (68˚F)	0.5 – 3.4
THW (E7–14) – E2 (E7–18)	G–R ↔ BR–B	Idling, Engine coolant temp. 80˚C (176˚F)	0.2 – 1.0
STA (E5–7) – E1 (E7–17)	B–W ↔ BR	Cranking	6.0 or more
#10 (E7–5) – E01 (E8–21) #20 (E7–6) – E01 (E8–21) #30 (E8–1) – E01 (E8–21) #40 (E8–2) – E01 (E8–21) #50 (E8–3) – E01 (E8–21) #60 (E8–4) – E01 (E8–21)	W–R ↔ BR W ↔ BR W–G ↔ BR L–R ↔ BR W–L ↔ BR L ↔ BR	IG switch ON	9 – 14
		Idling	Pulse generation (See page DI–254)
IGT1 (E8–11) – E1 (E7–17)	B–L ↔ BR	Idling	Pulse generation (See page DI–312)
IGT2 (E8–12) – E1 (E7–17)	BR–Y ↔ BR		
IGT3 (E8–13) – E1 (E7–17)	B–W ↔ BR		
IGF (E8–25) – E1 (E7–17)	B–Y ↔ BR	IG switch ON	4.5 – 5.5
		Idling	Pulse generation (See page DI–312)
G2 (E8–10) – NE– (E7–24)	Y ↔ G	Idling	Pulse generation (See page DI–263)
NE+ (E7–16) – NE– (E7–24)	R ↔ G	Idling	Pulse generation (See page DI–263)
FC (E5–3) – E01 (E8–21)	G–Y ↔ BR	IG switch ON	9 – 14
		Idling	0 – 3.0
EVP1 (E7–7) – E01 (E8–21)	W–G ↔ BR	IG switch ON	9 – 14
RSC (E8–15) – E01 (E8–21)	B–R ↔ BR	IG switch ON, Disconnect E8 connector from ECM	9 – 14
RSO (E8–16) – E01 (E8–21)	BR–R ↔ BR		
OXS (E6–8) – E1 (E7–17)	B ↔ BR	Maintain engine speed at 2,500 rpm for 3 min. after warming up	Pulse generation (See page DI–267)
HTS (E6–9) – E03 (E8–30)	R–L ↔ BR	IG switch ON	Below 3.0
KNK1 (E8–27) – E1 (E7–17)	B ↔ BR	Idling	Pulse generation (See page DI–260)
KNK2 (E8–28) – E1 (E7–17)	GR ↔ BR		

NSW (E6–20) – E1 (E7–17)*1	B–R ↔ BR	IG switch ON, Other shift position in P, N	9 – 14
		IG switch ON, Shift position in P, N	0 – 3.0
SP1 (E6–22) – E1 (E7–17)	G–O ↔ BR	IG switch ON, Rotate driving wheel slowly	Pulse generation
TE1 (E8–6) – E1 (E7–17)	R ↔ BR	IG switch ON	9 – 14
W (E5–6) – E01 (E8–21)	V–R ↔ BR	IG switch ON	Below 3.0
PSW (E7–9) – E1 (E7–17)	Y ↔ BR	IG switch ON	9 – 14
ACT (E6–13) – E1 (E7–17)	L–B ↔ BR	A/C switch OFF	Below 2.0
		A/C switch ON at idling	9 – 14
AC1 (E6–25) – E1 (E7–17)	L–Y ↔ BR	A/C switch ON at idling	Below 2.0
		A/C switch OFF	9 – 14
TPC (E5–9) – E01 (E8–21)	GR–G ↔ BR	IG switch ON, Disconnect hose from vapor pressure sensor	9 – 14
PTNK (E5–17) – E1 (E7–17)	R–G ↔ BR	IG switch ON	3.0 – 3.6
		IG switch ON, Apply vacuum 2.0 kPa (15 mmHg, 0.6 in.Hg)	1.3 – 2.1
SIL (E5–11) – E1 (E7–17)	W ↔ BR	During transmission	Pulse generation
STP (E5–15) – E1 (E7–17)	G–W ↔ BR	IG switch ON, Brake pedal depressed	7.5 – 14
		IG switch ON, Brake pedal released	Below 1.5
AF1+ (E7–12) – E1 (E7–17)	W ↔ BR	IG switch ON	3.3*2
AF1– (E7–21) – E1 (E7–17)	R ↔ BR	IG switch ON	3.0*2
HTAF1 (E7–4) – E05 (E7–8)	W ↔ BR	Idling	Below 3.0
		IG switch ON	4 – 5
IGSW (E5–2) – E1 (E7–17)	B–R ↔ BR	IG switch ON	9 – 14
MREL (E5–8) – E1 (E7–17)	B–O ↔ BR	IG switch ON	9 – 14

*1: Only for A/T

*2: The ECM terminal voltage is fixed regardless of the output voltage from the sensor.

Except California Spec.:

ECM Terminals

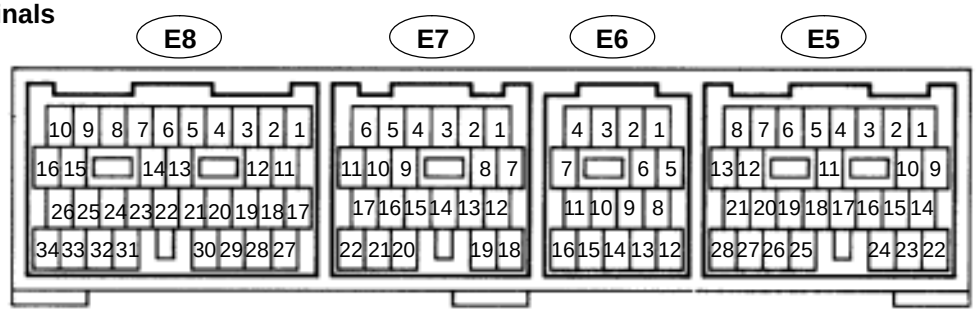

FI6810

Symbols (Terminal No.)	Wiring Color	Condition	STD Voltage (V)
BATT (E5–14) – E1 (E6–16)	B–Y ↔ BR	Always	9 – 14
+B (E5–23) – E1 (E6–16)	W–R ↔ BR	IG switch ON	9 – 14
VCC (E7–1) – E2 (E7–22)	G–B ↔ BR–B	IG switch ON	4.5 – 5.5
VTA (E7–7) – E2 (E7–22)	Y ↔ BR–B	IG switch ON, Throttle valve fully closed	0.3 – 1.0
		IG switch ON, Throttle valve fully open	2.7 – 5.2
VG (E7–8) – E3 (E6–7)	GR–R ↔ BR–W	Idling, A/C switch OFF, Shift position in P or N	1.1 – 1.5
THA (E7–21) – E2 (E7–22)	Y–G ↔ BR–B	Idling, Intake air temperature 20°C (68°F)	0.5 – 3.4
THW (E7–20) – E2 (E7–22)	G–R ↔ BR–B	Idling, Engine coolant temperature 80°C (176°F)	0.2 – 1.0
STA (E8–13) – E1 (E6–16)	B–W ↔ BR	Cranking	6.0 or more
#10 (E8–10) – E01 (E8–34) #20 (E8–9) – E01 (E8–34) #30 (E8–8) – E01 (E8–34) #40 (E8–7) – E01 (E8–34) #50 (E8–6) – E01 (E8–34) #60 (E8–5) – E01 (E8–34)	W–R ↔ BR W ↔ BR W–G ↔ BR L–R ↔ BR W–L ↔ BR L ↔ BR	IG switch ON	9 – 14
		Idling	Pulse generation (See page DI–254)
IGT1 (E8–24) – E1 (E6–16)	B–L ↔ BR	Idling	Pulse generation (See page DI–312)
IGT2 (E8–16) – E1 (E6–16)	BR–Y ↔ BR		
IGT3 (E8–15) – E1 (E6–16)	B–W ↔ BR		
IGF (E8–12) – E1 (E6–16)	B–Y ↔ BR	IG switch ON	4.5 – 5.5
		Idling	Pulse generation (See page DI–312)
G+ (E7–17) – NE– (E7–6)	Y ↔ G	Idling	Pulse generation (See page DI–263)
NE+ (E7–5) – NE– (E7–6)	R ↔ G		
FC (E7–18) – E1 (E6–16)	G–Y ↔ BR	IG switch ON	9 – 14
		Idling	0 – 3.0
EVP (E6–2) – E1 (E6–16)	W–G ↔ BR	IG switch ON	9 – 14
RSC (E8–22) – E1 (E6–16)	B–R ↔ BR	IG switch ON, Disconnect E8 from ECM connector	9 – 14
RSO (E8–23) – E1 (E6–16)	BR–R ↔ BR		
OX1 (E7–13) – E1 (E6–16)	W ↔ BR	Maintain engine speed at 2,500 rpm for 3 min. after warming up	Pulse generation (See page DI–270)
OX2 (E7–19) – E1 (E6–16)	B ↔ BR		
HT1 (E6–11) – E03 (E8–28)	P–G ↔ BR	Idling	Below 3.0
		IG switch ON	9 – 14
HT2 (E6–10) – E03 (E8–28)	R–W ↔ BR*1 R–G ↔ BR*2	Idling	Below 3.0
		IG switch ON	9 – 14
KNK1 (E7–15) – E1 (E6–16)	B ↔ BR	Idling	Pulse generation (See page DI–260)
KNK2 (E7–14) – E1 (E6–16)	GR ↔ BR		

NSW (E8–14) – E1 (E6–16)*1	B–R ↔ BR	IG switch ON, Other shift position in P or N	9 – 14
		IG switch ON, Shift position in P or N	0 – 3.0
SP1 (E5–12) – E1 (E6–16)	G–O ↔ BR	IG switch ON, Rotate driving wheel slowly	Pulse generation (See page DI–294)
TE1 (E6–5) – E1 (E6–16)	R ↔ BR	IG switch ON	9 – 14
W (E6–3) – E1 (E6–16)	V–R ↔ BR	Idling	9 14
		IG switch ON	Below 3.0
PSW (E8–31) – E1 (E6–16)	Y ↔ BR	IG switch ON	9 – 14
ACT (E5–5) – E1 (E6–16)	L–B ↔ BR	A/C switch OFF	Below 2.0
		A/C switch ON at idling	5.0 or more
AC1 (E5–16) – E1 (E6–16)	L–Y ↔ BR	A/C switch ON at idling	Below 2.0
		A/C switch OFF	9 – 14
TPC (E6–8) – E1 (E6–16)	GR–G ↔ BR	IG switch ON, Disconnect the vacuum hose from vapor pressure sensor	9 – 14
PTNK (E6–13) – E2 (E7–22)	R–Y ↔ BR–B	IG switch ON	3.0 – 3.6
		IG switch ON, Apply vacuum 4.0 kPa (30 mmHg, 1.18 in.Hg) to vapor pressure sensor	Below 0.5
BK (E5–24) – E1 (E6–16)	G–W ↔ BR	IG switch ON, Brake pedal is depressed	7.5 – 14
		IG switch ON, Brake pedal is released	Below 1.5

*1: A/T
*2: M/T

DI190–03

SRS Warning Light Circuit Malfunction (Always lights up, when ignition switch is in LOCK position.)

CIRCUIT DESCRIPTION

The SRS warning light is located on the combination meter.
When the SRS is normal, the SRS warning light lights up for approx. 6 seconds after the ignition switch is turned from the LOCK position to ACC or ON position, and then turns off automatically.
If there is a malfunction in the SRS, the SRS warning light lights up to inform the driver of the abnormality.
When terminals Tc and E1 of the DLC1 are connected, the DTC is displayed by blinking the SRS warning light.

WIRING DIAGRAM

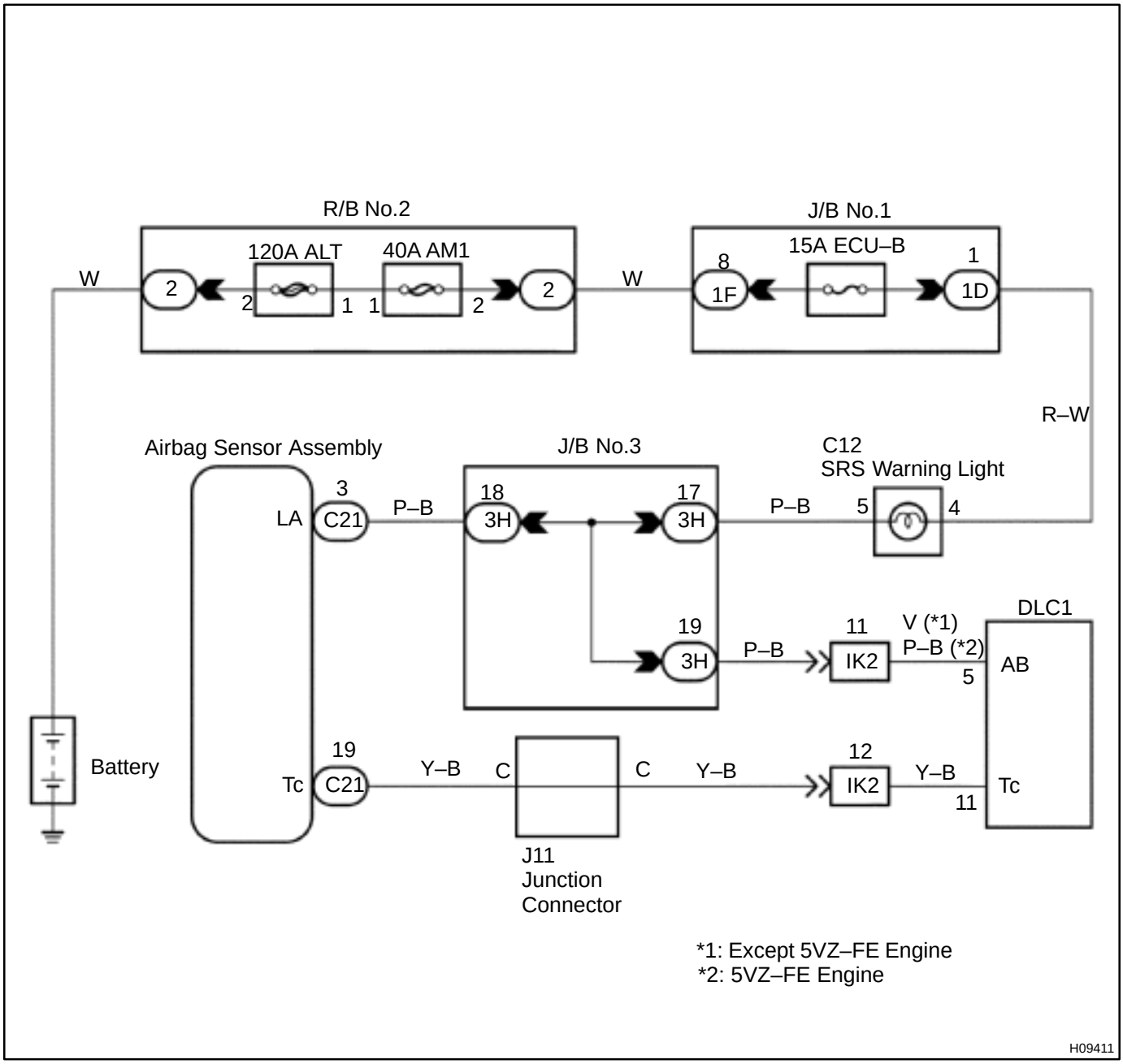

INSPECTION PROCEDURE

1	**Prepare for inspection. (See step 1 on page DI–543)**

2	**Does SRS warning light turn OFF?**

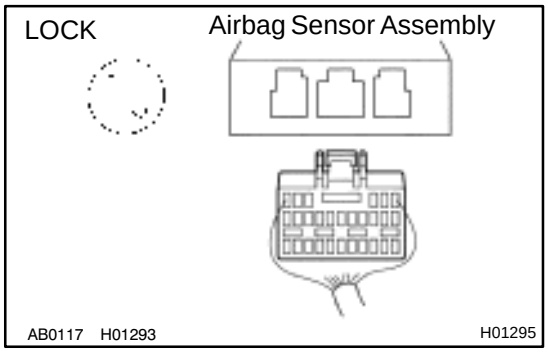

PREPARATION:

(a) Turn ignition switch to LOCK.
(b) Disconnect negative (–) terminal cable from the battery, and wait at least for 90 seconds.
(c) Disconnect the airbag sensor assembly connector.
(d) Connect negative (–) terminal cable to the battery.

CHECK:

Check operation of SRS warning light.

NO → **Check SRS warning light circuit or terminal AB circuit of DLC1.**

YES

Replace airbag sensor assembly.

DI55L–02

DTC	B1156/B1157/15	Front Airbag Sensor (RH) Malfunction

CIRCUIT DESCRIPTION

The front airbag sensor (RH) circuit consists of the airbag sensor assembly and front airbag sensor (RH). For details of the function of each component, see OPERATION on page RS–2.

DTC B1156/B1157/15 is recorded when malfunction is detected in the front airbag sensor (RH) circuit.

DTC No.	DTC Detecting Condition	Trouble Area
B1156/B1157/15	• Front airbag sensor (RH) malfunction	• Front airbag sensor (RH) • Airbag sensor assembly • Wire harness

WIRING DIAGRAM

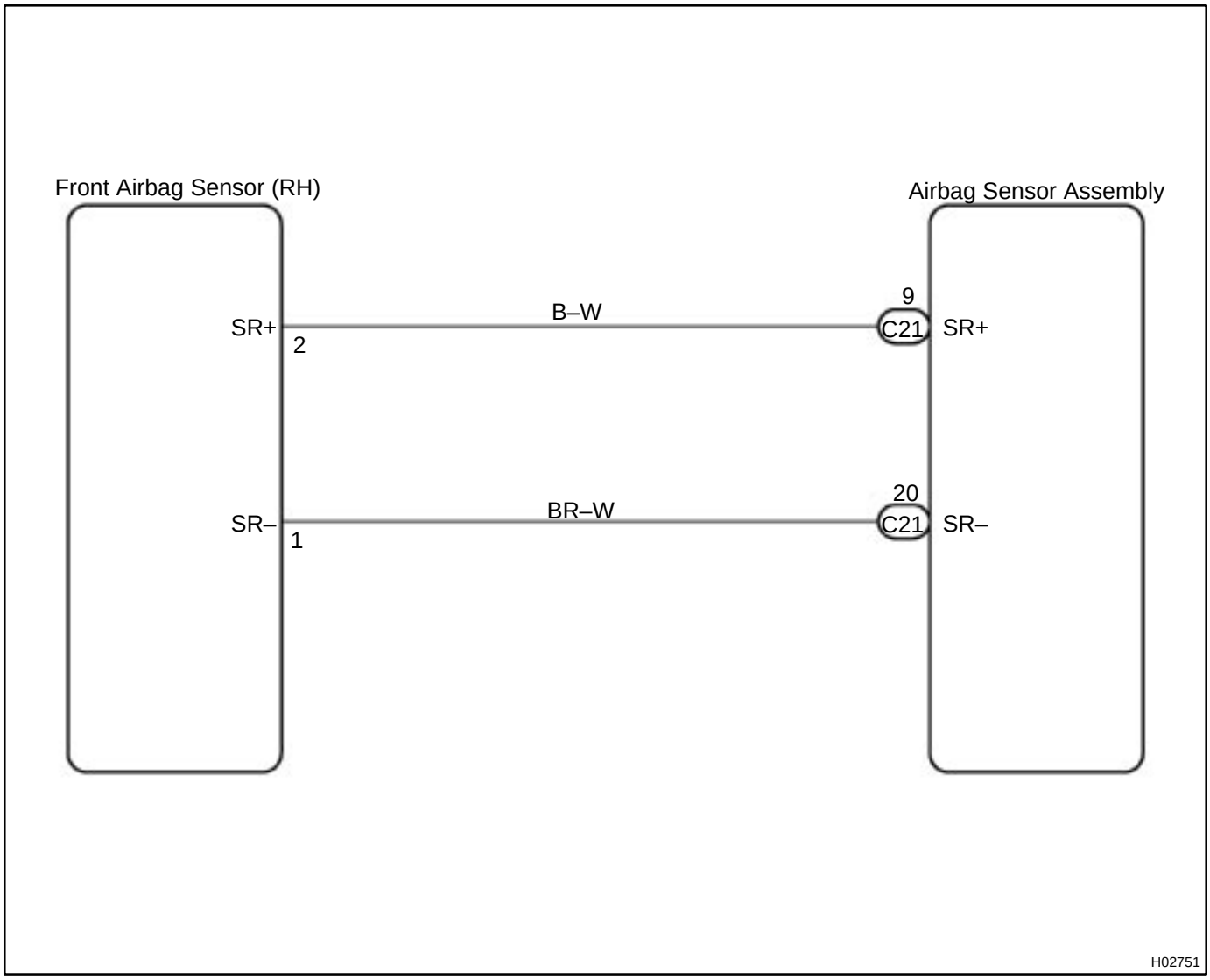

INSPECTION PROCEDURE

1	**Prepare for inspection. (See step 1 on page DI–543)**

2	**Check front airbag sensor (RH) circuit.**

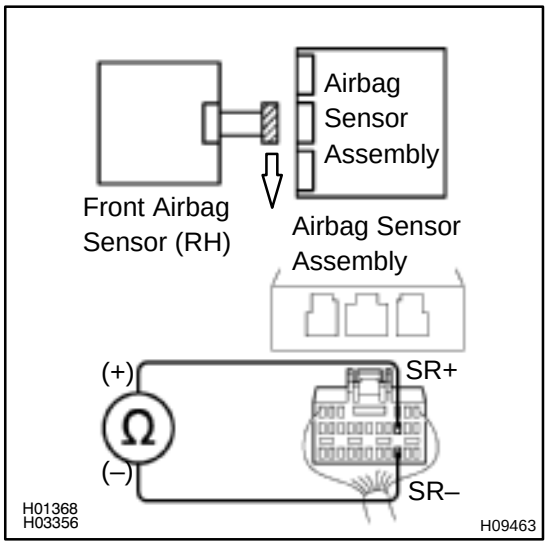

CHECK:

For the connector (on the airbag sensor assembly side) between the front airbag sensor (RH) and the airbag sensor assembly, measure the resistance between SR+ and SR–.

OK:

Resistance: 754 – 886 Ω

NG → **Go to step 6.**

OK

3	Check front airbag sensor (RH) circuit (to ground).

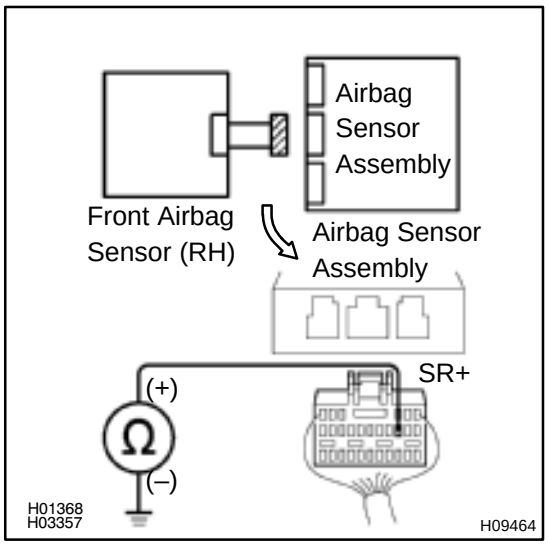

CHECK:

For the connector (on the airbag sensor assembly side) between the front airbag sensor (RH) and the airbag sensor assembly, measure the resistance between SR+ and body ground.

OK:

Resistance: 1 MΩ or Higher

NG → **Go to step 7.**

OK

4	Check front airbag sensor (RH) circuit (to B+).

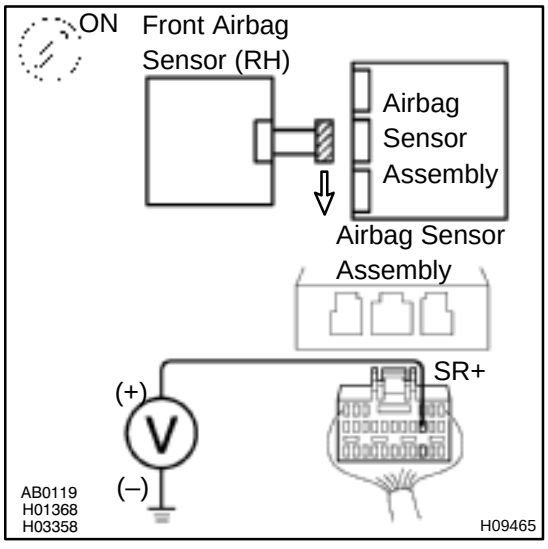

PREPARATION:

Connect negative (–) terminal cable to the battery, and wait at least for 2 seconds.

CHECK:

(a) Turn ignition switch to ON.

(b) For the connector (on the airbag sensor assembly side) between the front airbag sensor (RH) and the airbag sensor assembly, measure the voltage between SR+ and body ground.

OK:

Voltage: Below 1 V

NG → **Go to step 8.**

OK

5	Check airbag sensor assembly.

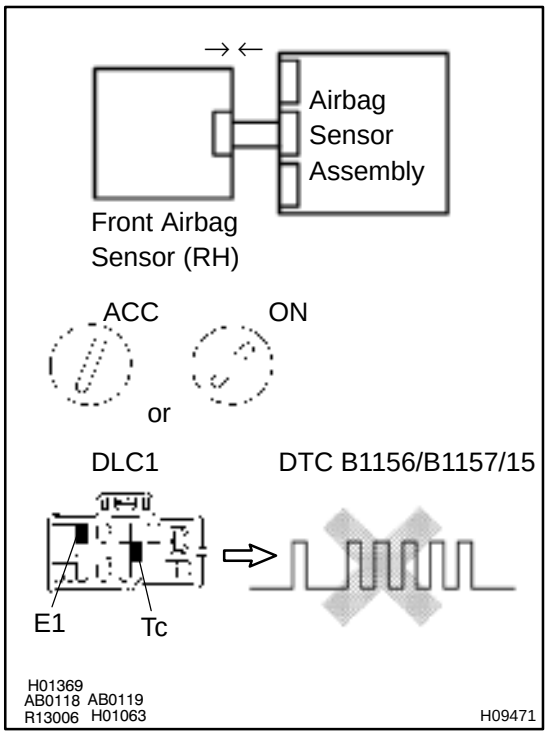

PREPARATION:

(a) Turn ignition switch to LOCK.
(b) Disconnect negative (–) terminal cable from the battery, and wait at least for 90 seconds.
(c) Connect the front airbag sensor (RH) connector and airbag sensor assembly connector.
(d) Connect negative (–) terminal cable to the battery, and wait at least for 2 seconds.

CHECK:

(a) Turn ignition switch to ACC or ON, and wait at least for 20 seconds.
(b) Clear DTC stored in memory.
(See page DI–456)
(c) Turn ignition switch to LOCK, and wait at least for 20 seconds.
(d) Turn ignition switch to ACC or ON, and wait at least for 20 seconds.
(e) Check DTC.
(See page DI–456)

OK:

DTC B1156/B1157/15 is not output.

HINT:
Codes other than code B1156/B1157/15 may be output at this time, but they are not relevant to this check.

NG → **Replace airbag sensor assembly.**

OK

From the results of the above inspection, the malfunctioning part can now be considered normal. To make sure of this, use the simulation method to check.

6	Check front airbag sensor (RH).

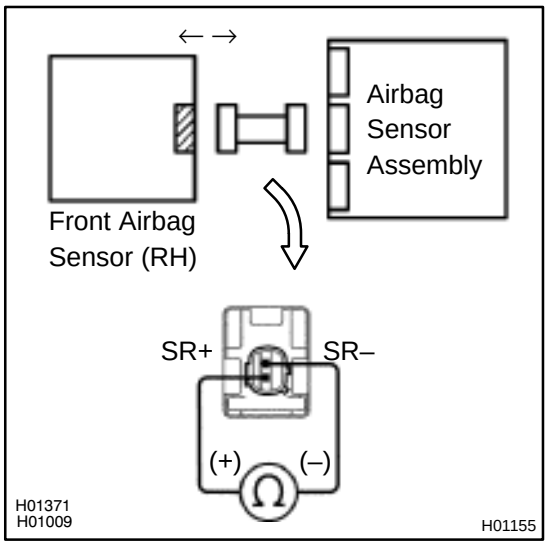

PREPARATION:

Disconnect the front airbag sensor connector (RH).

CHECK:

For the connector (on the front airbag sensor side), measure the resistance between SR+ and SR–.

OK:

Resistance: 754 – 886 Ω

NG → **Replace front airbag sensor (RH).**

OK

Repair or replace harness or connector between the front airbag sensor (RH) and airbag sensor assembly.

7	Check wire harness (to ground).

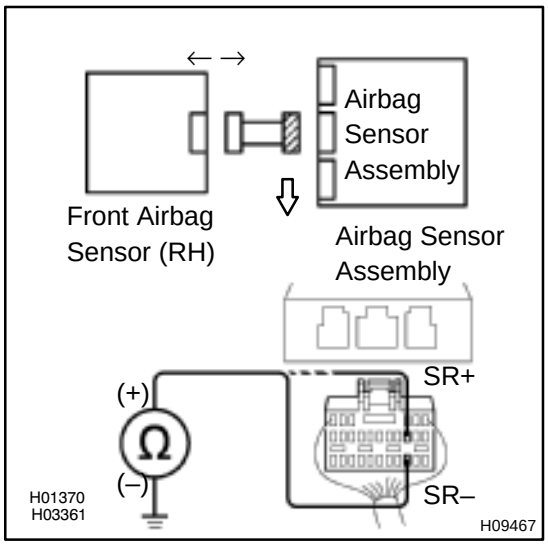

PREPARATION:
Disconnect the front airbag sensor connector (RH).
CHECK:
For the connector (on the airbag sensor assembly side) between the front airbag sensor (RH) and the airbag sensor assembly, measure the resistance between body ground and each of SR+ and SR–.
OK:
Resistance: 1 MΩ or Higher

NG → **Repair or replace harness or connector between the front airbag sensor (RH) and airbag assembly.**

OK

Replace front airbag sensor (RH).

8	Check wire harness (to B+).

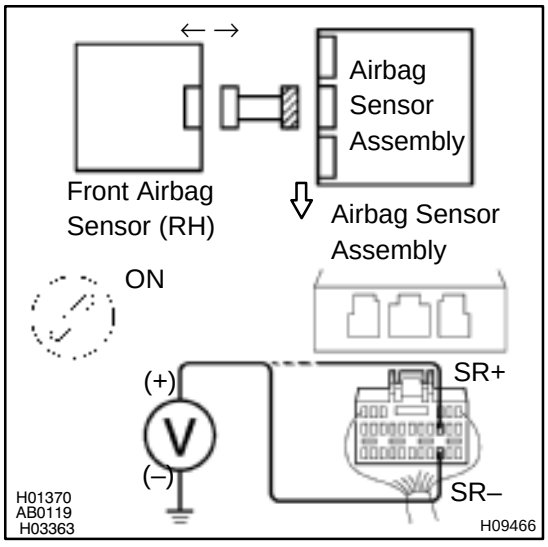

PREPARATION:
Disconnect the front airbag sensor connector (RH).
CHECK:
(a) Turn ignition switch to ON.
(b) For the connector (on the airbag sensor assembly side) between the front airbag sensor (RH) and the airbag sensor assembly, measure the voltage between body ground and each of SR+ and SR–.
OK:
Voltage: Below 1 V

NG → **Repair or replace harness or connector between the front airbag sensor (RH) and airbag assembly.**

OK

Replace front airbag sensor (RH).

DI55M–02

DTC	B1158/B1159/16	Front Airbag Sensor (LH) Malfunction

CIRCUIT DESCRIPTION

The front airbag sensor (LH) circuit consists of the airbag sensor assembly and front airbag sensor (LH). For details of the function of each component, see OPERATION on page RS–2.

DTC B1158/B1159/15 is recorded when malfunction is detected in0 the front airbag sensor (LH) circuit.

DTC No.	DTC Detecting Condition	Trouble Area
B1158/B1159/16	• Front airbag sensor (LH) malfunction	• Front airbag sensor (LH) • Airbag sensor assembly • Wire harness • Cowl wire harness

WIRING DIAGRAM

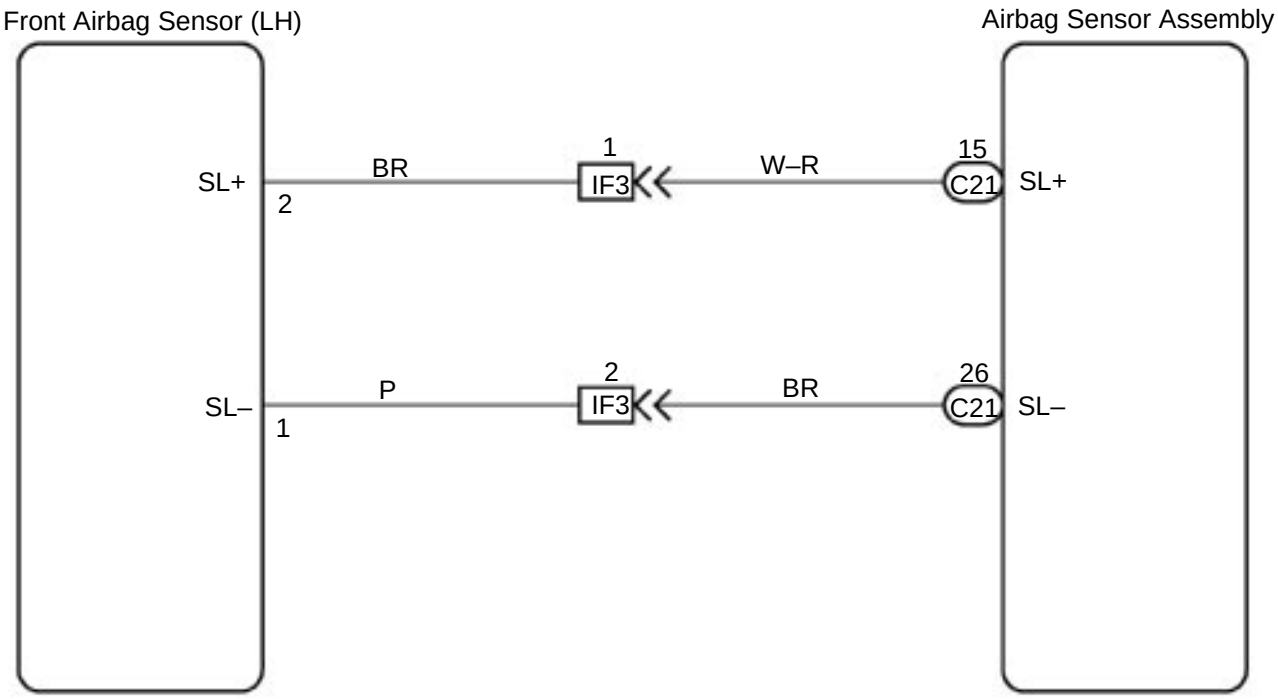

H02750

INSPECTION PROCEDURE

1	**Prepare for inspection. (See step 1 on page DI–543)**

2	**Check front airbag sensor (LH) circuit.**

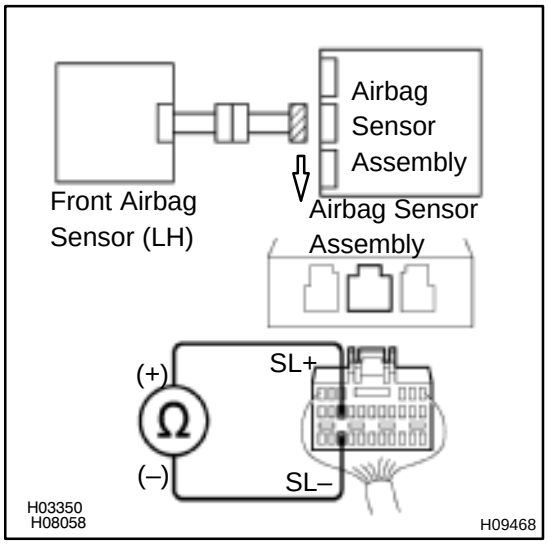

CHECK:

For the connector (on the airbag sensor assembly side) between the front airbag sensor (LH) and the airbag sensor assembly, measure the resistance between SL+ and SL–.

OK:

Resistance: 754 – 886 Ω

NG → **Go to step 6.**

OK

3	Check front airbag sensor (LH) circuit (to ground).

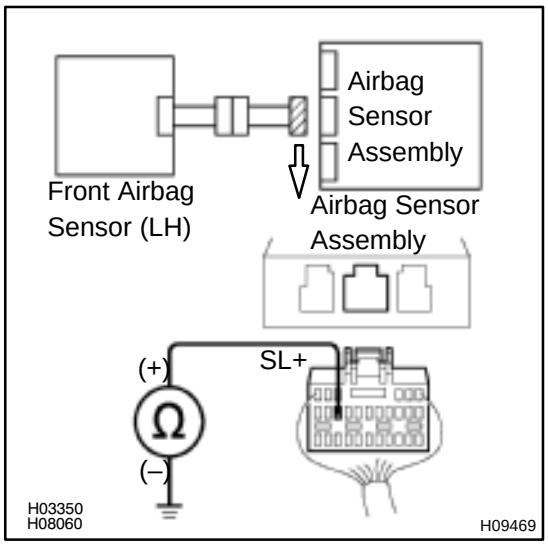

CHECK:

For the connector (on the airbag sensor assembly side) between the front airbag sensor (LH) and the airbag sensor assembly, measure the resistance between SL+ and body ground.

OK:

Resistance: 1 MΩ or Higher

NG → **Go to step 9.**

OK

4	Check front airbag sensor (LH) circuit (to B+).

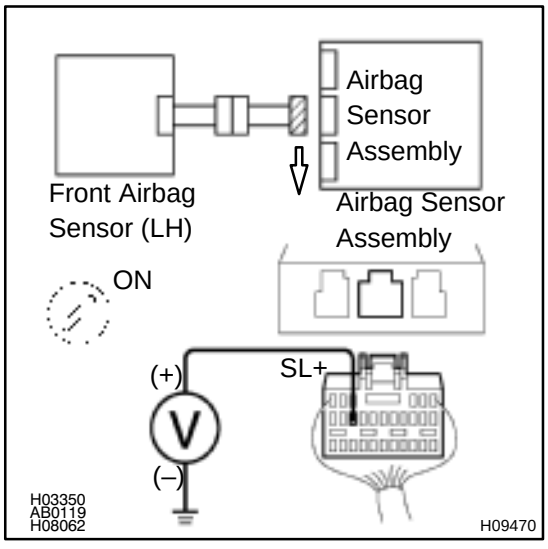

PREPARATION:

Connect negative (–) terminal cable to the battery, and wait at least for 2 seconds.

CHECK:

(a) Turn ignition switch to ON.

(b) For the connector (on the airbag sensor assembly side) between the front airbag sensor (LH) and the airbag sensor assembly, measure the voltage between SL+ and body ground.

OK:

Voltage: Below 1 V

NG → **Go to step 7.**

OK

5	Check airbag sensor assembly.

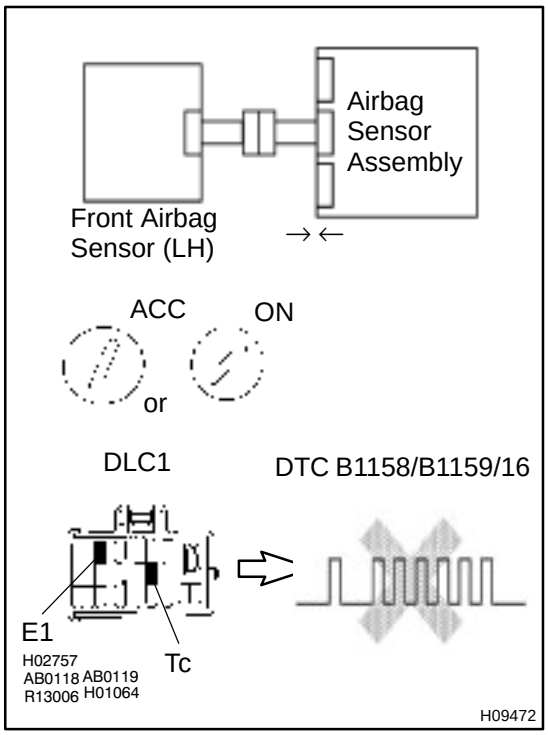

PREPARATION:

(a) Turn ignition switch to LOCK.
(b) Disconnect negative (–) terminal cable from the battery, and wait at least for 90 seconds.
(c) Connect the front airbag sensor (LH) connector and airbag sensor assembly connector.
(d) Connect negative (–) terminal cable to the battery, and wait at least for 2 seconds.

CHECK:

(a) Turn ignition switch to ACC or ON, and wait at least for 20 seconds.
(b) Clear DTC stored in memory.
(See page DI–456)
(c) Turn ignition switch to LOCK, and wait at least for 20 seconds.
(d) Turn ignition switch to ACC or ON, and wait at least for 20 seconds.
(e) Check DTC.
(See page DI–456)

OK:

DTC B1158/B1159/16 is not output.

HINT:
Codes other than code B1158/B1159/16 may be output at this time, but they are not relevant to this check.

NG → **Replace airbag sensor assembly.**

OK

From the results of the above inspection, the malfunctioning part can now be considered normal. To make sure of this, use the simulation method to check.

6	Check front airbag sensor (LH).

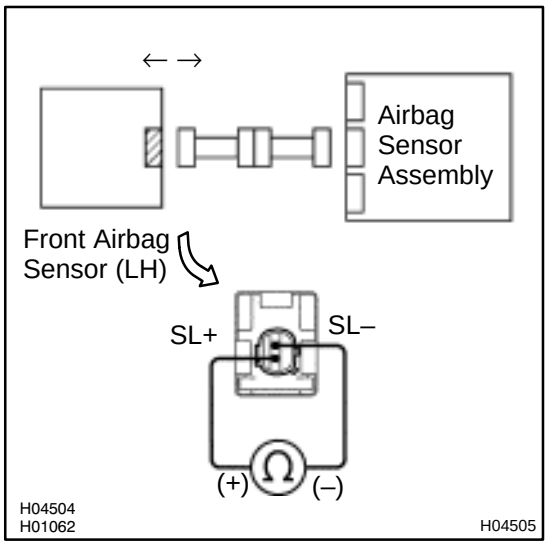

PREPARATION:
Disconnect the front airbag sensor connector (LH).
CHECK:
For the connector (on the front airbag sensor side), measure the resistance between SL+ and SL–.
OK:
Resistance: 754 – 886 Ω

NG → **Replace front airbag sensor (LH).**

OK

7	Check cowl wire harness.

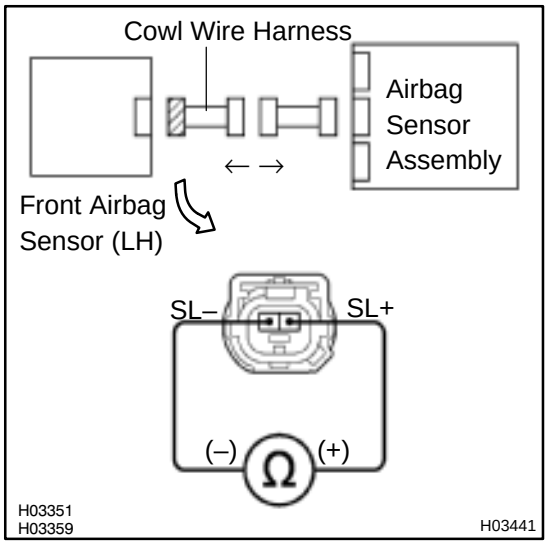

PREPARATION:
Disconnect the cowl wire harness connector on the airbag sensor assembly side.
CHECK:
For the connector (on the cowl wire harness side) between the front airbag sensor (LH) and the cowl wire harness, measure the resistance between SL+ and SL–.
OK:
Resistance: 1 MΩ or Higher

NG → **Repair or replace cowl wire harness.**

OK

8	Check cowl wire harness.

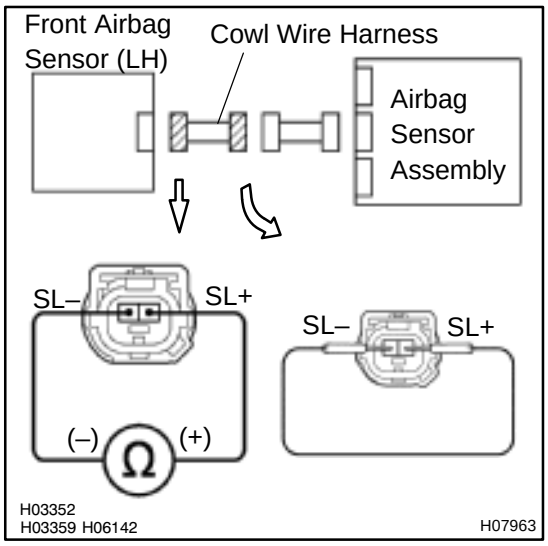

PREPARATION:

Using service wire, connect SL+ and SL– of the connector (on the cowl wire harness side), between the airbag sensor assembly and the cowl wire harness.

CHECK:

For the connector (on the cowl wire harness side) between the front airbag sensor (LH) and the cowl wire harness, measure the resistance between SL+ and SL–.

OK:

Resistance: Below 1 Ω

NG → **Repair or replace cowl wire harness.**

OK

Repair or replace harness or connector between airbag sensor assembly and cowl wire harness.

9	Check wire harness (to ground).

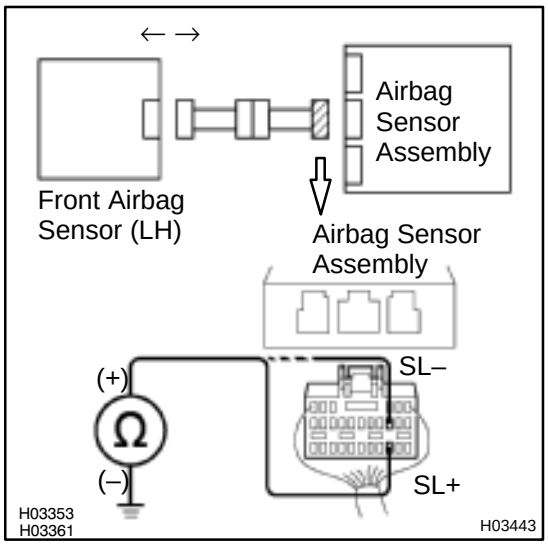

PREPARATION:
Disconnect the front airbag sensor connector (LH).
CHECK:
For the connector (on the airbag sensor assembly side) between the front airbag sensor (LH) and the airbag sensor assembly, measure the resistance between body ground and each of SL+ and SL–.
OK:
Resistance:1 MΩ or Higher

OK	Replace front airbag sensor (LH).

NG

10	Check cowl wire harness (to ground).

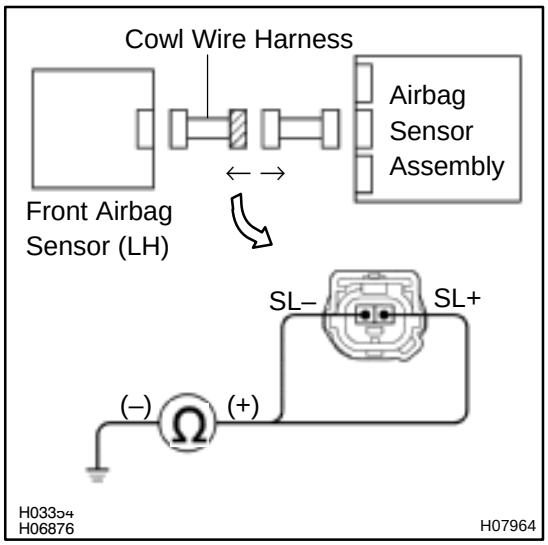

PREPARATION:
Disconnect the cowl wire harness connector on the airbag sensor assembly side.
CHECK:
For the connector (on the cowl wire harness side) between the front airbag sensor (LH) and the cowl wire harness, measure the resistance between body ground and each of SL+ and SL–.
OK:
Resistance:1 MΩ or Higher

NG	Repair or replace cowl wire harness.

OK

Repair or replace harness or connector between airbag sensor assembly and cowl wire harness.

11	Check wire harness (to B+).

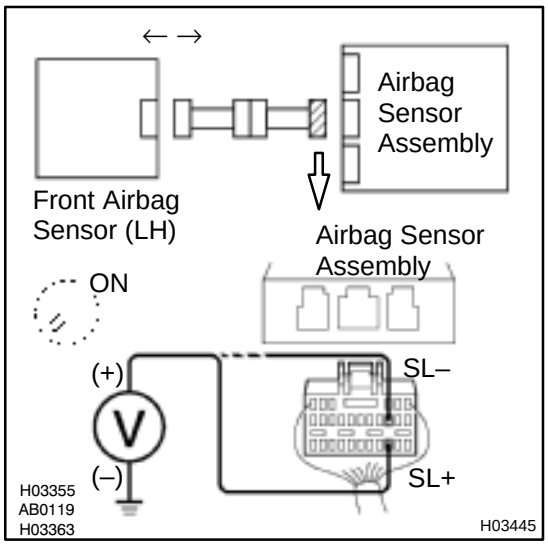

PREPARATION:

(a) Disconnect the front airbag sensor connector (LH).

(b) Turn ignition switch to ON.

CHECK:

For the connector (on the airbag sensor assembly side) between the front airbag sensor (LH) and the airbag sensor assembly, measure the voltage between body ground and each of SL+ and SL–.

OK:

Voltage: Below 1 V

OK	Replace front airbag sensor (LH).

NG

12	Check cowl wire harness (to B+).

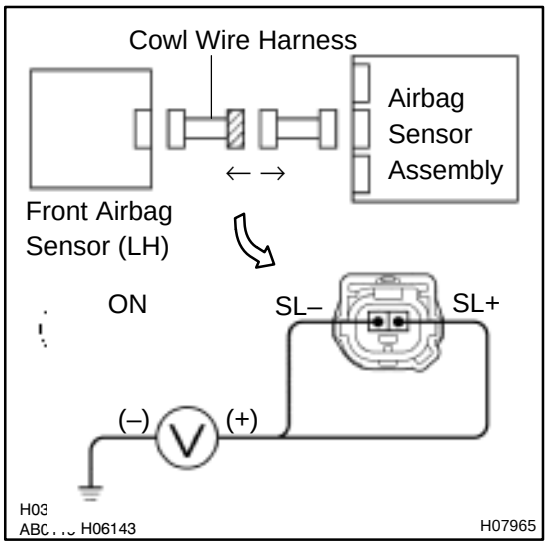

PREPARATION:

Disconnect the cowl wire harness connector on the airbag sensor assembly side.

CHECK:

For the connector (on the cowl wire harness side) between the front airbag sensor (LH) and the cowl wire harness, measure the voltage between body ground and each of SL+ and SL–.

OK:

Voltage: Below 1 V

NG	Repair or replace cowl wire harness.

OK

Repair or replace harness or connector between airbag sensor assembly and cowl wire harness.

DI18Y–02

DTC	B1100/31	Airbag Sensor Assembly Malfunction

CIRCUIT DESCRIPTION

The airbag sensor assembly consists of a airbag sensor, safing sensor, drive circuit, diagnosis circuit and ignition control, etc..
It receives signals from the airbag sensor, judges whether or not the SRS must be activated, and detects diagnosis system malfunction.
DTC B1100/31 is recorded when occurrence of a malfunction in the airbag sensor assembly is detected.

DTC No.	DTC Detecting Condition	Trouble Area
B1100/31	• Airbag sensor assembly malfunction	• Airbag sensor assembly

INSPECTION PROCEDURE

HINT:
When a malfunction code other than code B1100/31 is displayed at the same time, first repair the malfunction indicated by the malfunction code other than code B1100/31.

1	**Prepare for inspection. (See step 1 on page DI–543)**

2	**Check voltage at IG2 and ACC of airbag sensor assembly.**

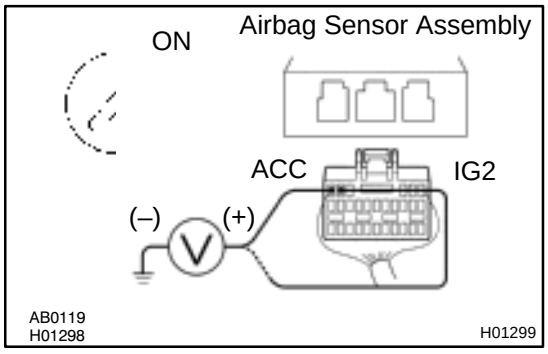

PREPARATION:
Turn ignition switch to ON.
CHECK:
Measure the voltage between each off terminals IG2 and ACC of the airbag sensor assembly and the body ground.
OK:
Voltage: Below 16 V

NG → **Check that an abnormality occurs on the battery and charging system.**

OK

3	Is DTC B1100/31 output again?

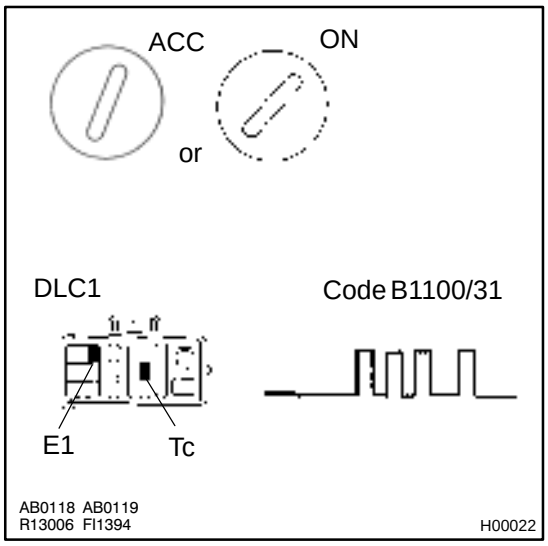

PREPARATION:

Clear malfunction code.

(See step 5 on page DI–456)

CHECK:

(a) Turn ignition switch to LOCK, and wait at least for 20 seconds.

(b) Turn ignition switch to ACC or ON, and wait at least for 20 seconds.

(c) Repeat operation in step (a) and (b) at least 5 times.

(d) Check DTC.
(See page DI–456)

NO → **Using simulation method, reproduce malfunction symptoms. (See page IN–18)**

YES

Replace airbag sensor assembly.

DI18Q–19

CIRCUIT INSPECTION

DTC	B0100/13	Short in D Squib Circuit

CIRCUIT DESCRIPTION

The D squib circuit consists of the airbag sensor assembly, spiral cable and steering wheel pad.
It causes the airbag to deploy when the airbag deployment conditions are satisfied.
For details of the function of each component, see OPERATION on page RS–2.
DTC B0100/13 is recorded when a short is detected in the D squib circuit.

DTC No.	DTC Detecting Condition	Trouble Area
B0100/13	• Short circuit between D+ wire harness and D– wire harness of squib • D squib malfunction • Spiral cable malfunction • Airbag sensor assembly malfunction	• Steering wheel pad (D squib) • Spiral cable • Airbag sensor assembly • Wire harness

WIRING DIAGRAM

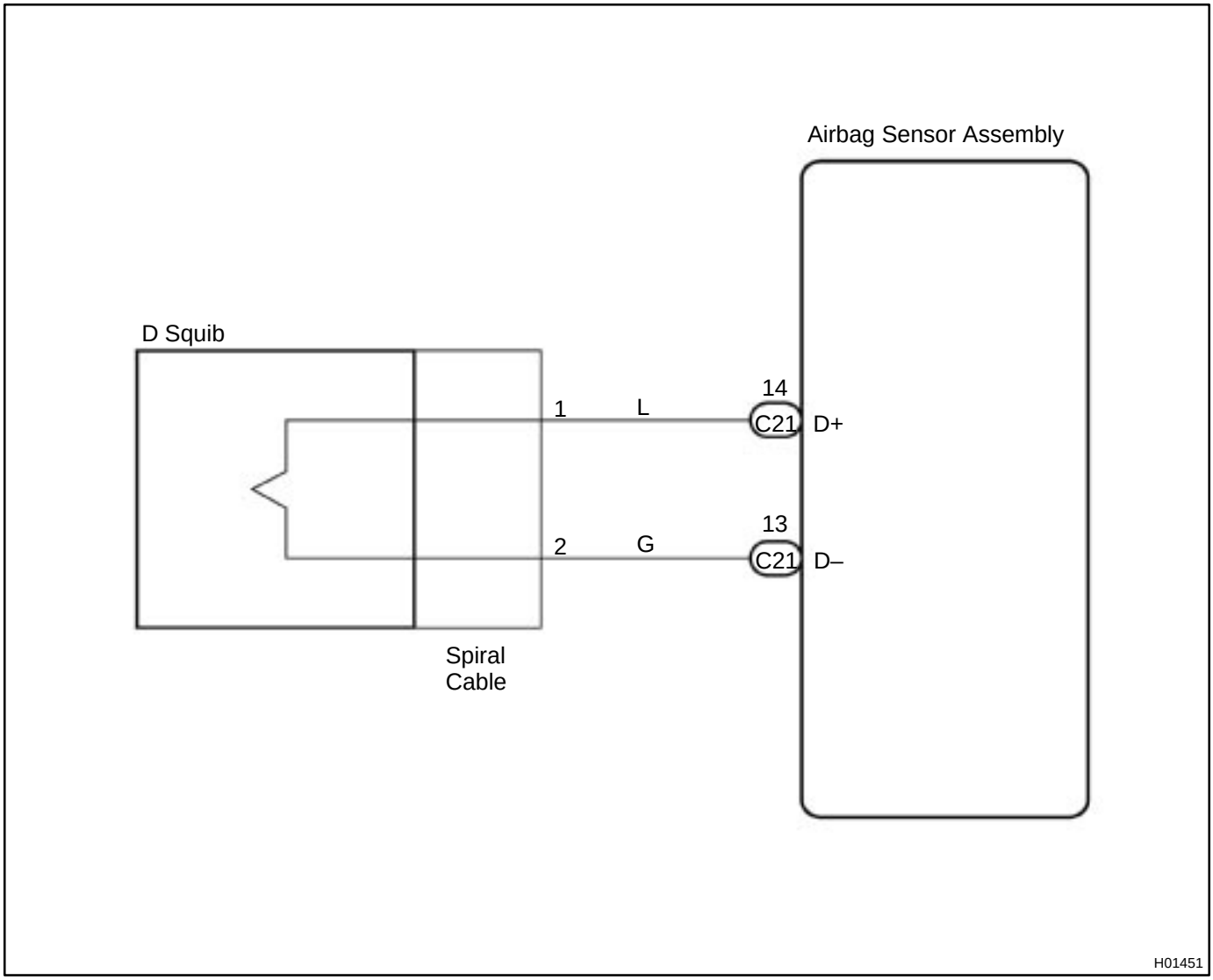

INSPECTION PROCEDURE

1	**Prepare for inspection (See step 1 on page DI–543).**

2	**Check D squib circuit.**

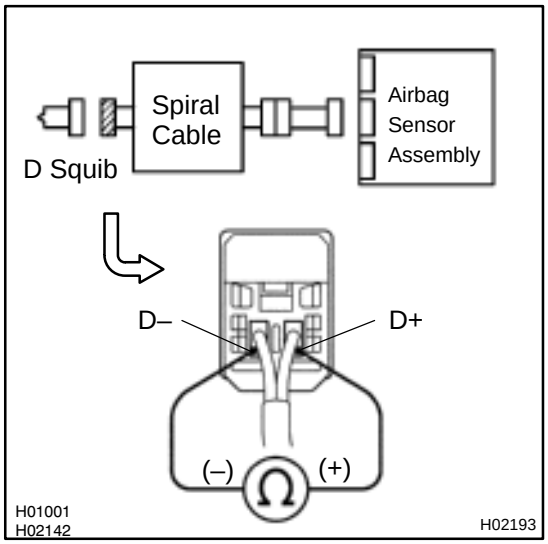

PREPARATION:

Release the airbag activation prevention mechanism of the connector (on the airbag sensor assembly side) between the airbag sensor assembly and the spiral cable (See page DI–456).

CHECK:

For the connector (on the spiral cable side) between the spiral cable and the steering wheel pad, measure the resistance between D+ and D–.

OK:

Resistance: 1 MΩ or Higher

NG → **Go to step 5.**

OK

3	**Check airbag sensor assembly.**

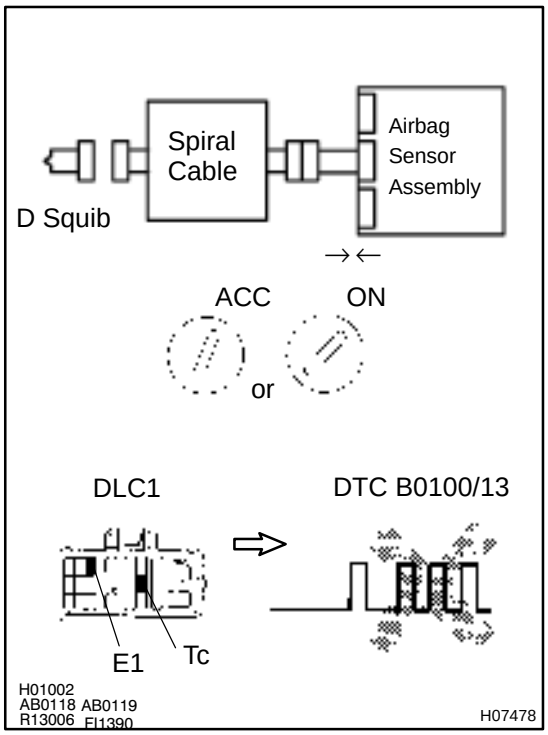

PREPARATION:

(a) Connect the connector to the airbag sensor assembly.
(b) Connect negative (–) terminal cable to the battery, and wait at least for 2 seconds.

CHECK:

(a) Turn the ignition switch to ACC or ON and wait at least for 20 seconds.
(b) Clear the DTC stored in memory (See page DI–456).
(c) Turn the ignition switch to LOCK, and wait at least for 20 seconds.
(d) Turn the ignition switch to ACC or ON, and wait at least for 20 seconds.
(e) Check the DTC (See page DI–456).

OK:

DTC B0100/13 is not output.

HINT:
Codes other than code B0100/13 may be output at this time, but they are not relevant to this check.

NG → **Replace airbag sensor assembly.**

OK

4	Check D squib.

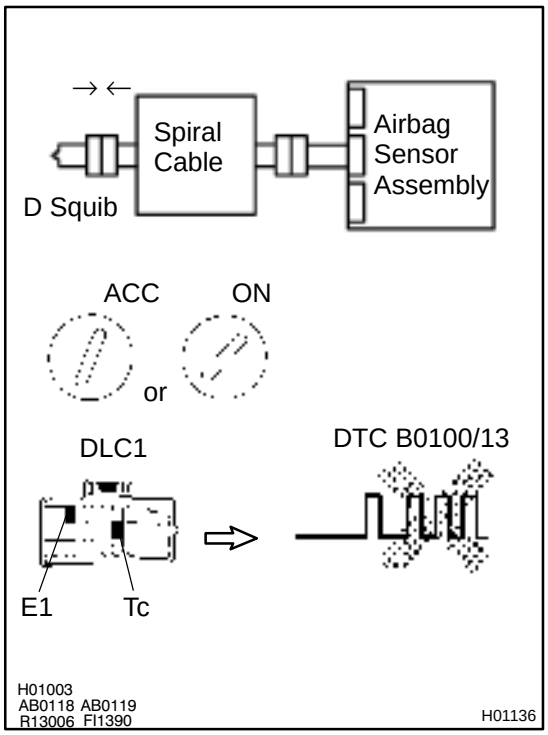

PREPARATION:

(a) Turn the ignition switch to LOCK.
(b) Disconnect negative (–) terminal cable from the battery, and wait at least for 90 seconds.
(c) Connect the steering wheel pad connector.
(d) Connect negative (–) terminal cable to the battery, and wait at least for 2 seconds.

CHECK:

(a) Turn the ignition switch to LOCK, and wait at least for 20 seconds.
(b) Turn the ignition switch to ACC or ON, and wait at least for 20 seconds.
(c) Clear the DTC stored in memory (See page DI–456).
(d) Turn the ignition switch to LOCK, and wait at least for 20 seconds.
(e) Turn the ignition switch to ACC or ON, and wait at least for 20 seconds.
(f) Check the DTC (See page DI–456).

OK:

DTC B0100/13 is not output.

HINT:

Codes other than code B0100/13 may be output at this time, but they are not relevant to this check.

NG → **Replace steering wheel pad.**

OK

From the results of the above inspection, the malfunctioning part can now be considered normal. To make sure of this, use the simulation method to check.

5	Check spiral cable.

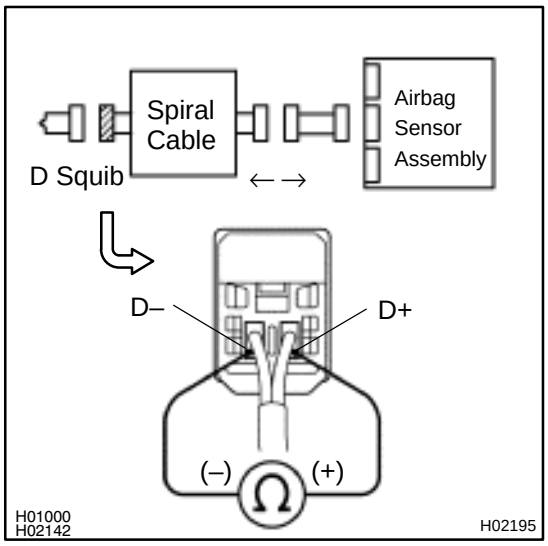

PREPARATION:

(a) Disconnect the connector between the airbag sensor assembly and the spiral cable.

(b) Release the airbag activation prevention mechanism of the spiral cable connector on the airbag sensor assembly side (See page DI–456).

CHECK:

For the connector (on the spiral cable side) between the spiral cable and the steering wheel pad, measure the resistance between D+ and D–.

OK:

Resistance: 1 MΩ or Higher

NG → **Repair or replace spiral cable.**

OK

6	Check harness between airbag sensor assembly and spiral cable.

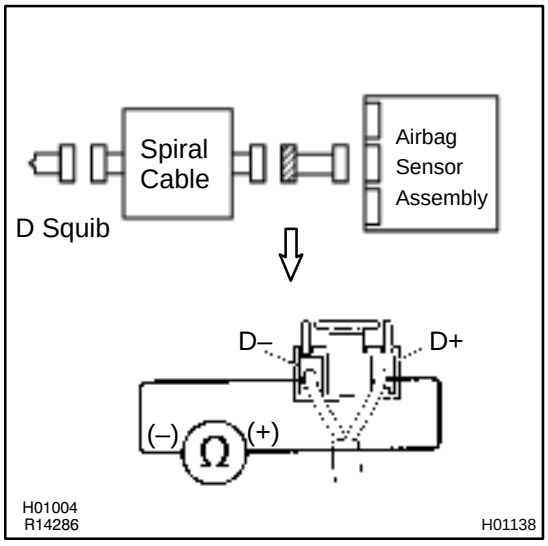

PREPARATION:

Release the airbag activation prevention mechanism of the connector (on the airbag sensor assembly side) between the airbag sensor assembly and the spiral cable (See page DI–456).

CHECK:

For the connector (on the spiral cable side) between the airbag sensor assembly and the spiral cable, measure the resistance between D+ and D–.

OK:

Resistance: 1 MΩ or Higher

NG → **Repair or replace harness or connector between airbag sensor assembly and spiral cable.**

OK

From the results of the above inspection, the malfunctioning part can now be considered normal. To make sure of this, use the simulation method to check.

DTC	B0101/14	Open in D Squib Circuit

CIRCUIT DESCRIPTION

The D squib circuit consists of the airbag sensor assembly, spiral cable and steering wheel pad.
It causes the airbag to deploy when the airbag deployment conditions are satisfied.
For details of the function of each component, see OPERATION on page RS–2.
DTC B0101/14 is recorded when an open is detected in the D squib circuit.

DTC No.	DTC Detecting Condition	Trouble Area
B0101/14	• Open circuit in D+ wire harness or D– wire harness of squib • D squib malfunction • Spiral cable malfunction • Airbag sensor assembly malfunction	• Steering wheel pad (D squib) • Spiral cable • Airbag sensor assembly • Wire harness

WIRING DIAGRAM

See page DI–467.

INSPECTION PROCEDURE

1	**Prepare for inspection (See step 1 on page DI–543).**

2	**Check D squib circuit.**

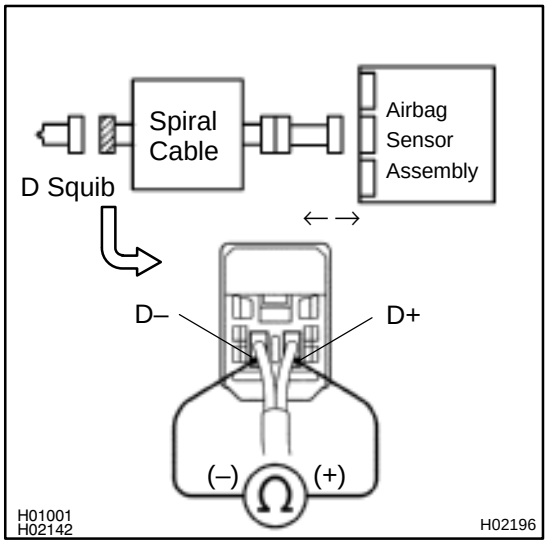

CHECK:

For the connector (on the spiral cable side) between the spiral cable and the steering wheel pad, measure the resistance between D+ and D–.

OK:

Resistance: Below 1 Ω

NG → **Go to step 5.**

OK

3	Check airbag sensor assembly.

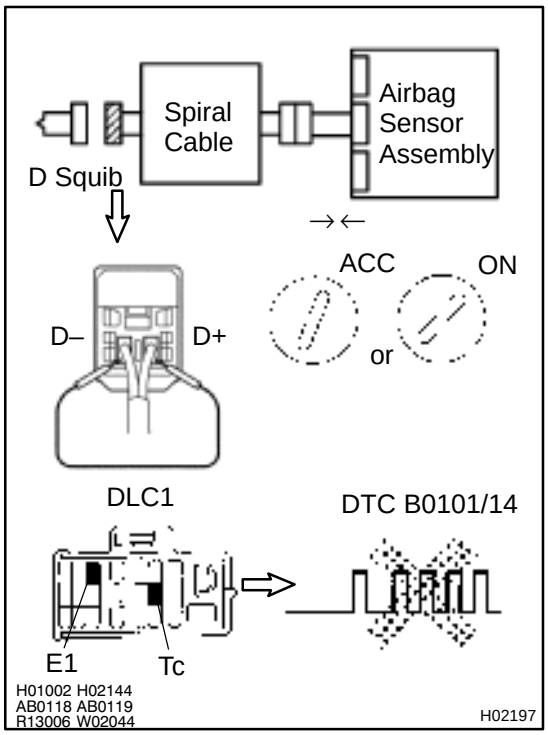

PREPARATION:

(a) Connect the connector to the airbag sensor assembly.
(b) Using a service wire, connect D+ and D– of the connector (on the spiral cable side) between the spiral cable and the steering wheel pad.
(c) Connect negative (–) terminal cable to the battery, and wait at least for 2 seconds.

CHECK:

(a) Turn the ignition switch to ACC or ON, and wait at least for 20 seconds.
(b) Clear the DTC stored in memory (See page DI–456).
(c) Turn the ignition switch to LOCK, and wait at least for 20 seconds.
(d) Turn the ignition switch to ACC or ON, and wait at least for 20 seconds.
(e) Check the DTC (See page DI–456).

OK:

DTC B0101/14 is not output.

HINT:

Codes other than code B0101/14 may be output at this time, but they are not relevant to this check.

NG	Replace airbag sensor assembly.

OK

4	Check D squib.

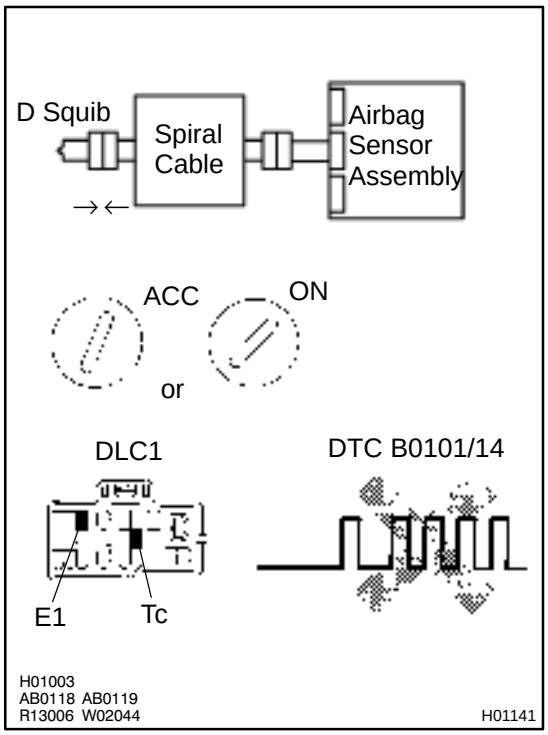

PREPARATION:

(a) Turn the ignition switch to LOCK.
(b) Disconnect negative (–) terminal cable from the battery, and wait at least for 90 seconds.
(c) Connect the steering wheel pad connector.
(d) Connect negative (–) terminal cable to the battery, and wait at least for 2 seconds.

CHECK:

(a) Turn the ignition switch to ACC or ON, and wait at least for 20 seconds.
(b) Clear the DTC stored in memory (See page DI–456).
(c) Turn the ignition switch to LOCK, and wait at least for 20 seconds.
(d) Turn the ignition switch to ACC or ON, and wait at least for 20 seconds.
(e) Check the DTC (See page DI–456).

OK:

DTC B0101/14 is not output.

HINT:

Codes other than code B0101/14 may be output at this time, but they are not relevant to this check.

NG → **Replace steering wheel pad.**

OK

From the results of the above inspection, the malfunctioning part can now be considered normal. To make sure of this, use the simulation method to check.

5	Check spiral cable.

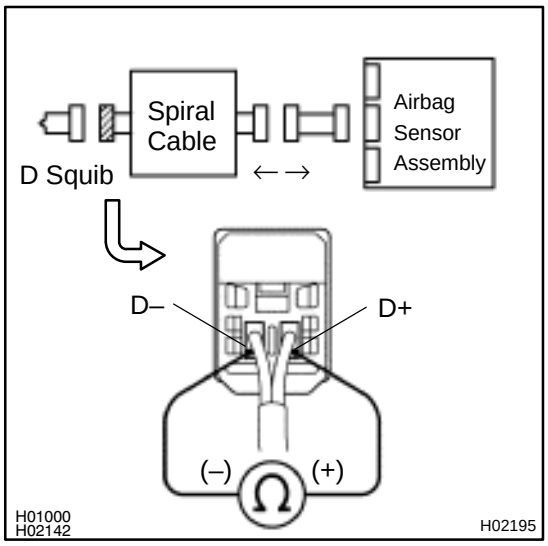

PREPARATION:
Disconnect the connector between the airbag sensor assembly and the spiral cable.
CHECK:
For the connector (on the spiral cable side) between the spiral cable and the steering wheel pad, measure the resistance between D+ and D–.
OK:
Resistance: Below 1 Ω

NG → **Repair or replace spiral cable.**

OK

6	Check harness between airbag sensor assembly and spiral cable.

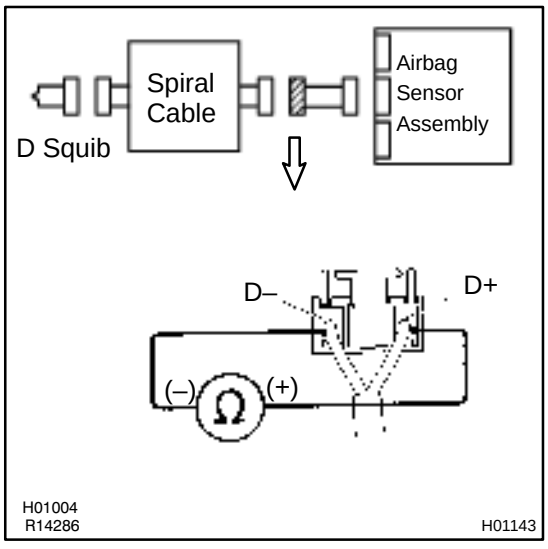

CHECK:
For the connector (on the spiral cable side) between the airbag sensor assembly and the spiral cable, measure the resistance between D+ and D–.
OK:
Resistance: Below 1 Ω

NG → **Repair or replace harness or connector between airbag sensor assembly and spiral cable.**

OK

From the results of the above inspection, the malfunctioning part can now be considered normal. To make sure of this, use the simulation method to check.

DI55B–02

DTC	B0102/11	Short in D Squib Circuit (to Ground)

CIRCUIT DESCRIPTION

The D squib circuit consists of the airbag sensor assembly, spiral cable and steering wheel pad.
It causes the SRS to deploy when the SRS deployment conditions are satisfied.
For details of the function of each component, see OPERATION on page RS–2.
DTC B0102/11 is recorded when a ground short is detected in the D squib circuit.

DTC No.	DTC Detecting Condition	Trouble Area
B0102/11	• Short circuit in D squib wire harness (to ground) • D squib malfunction • Spiral cable malfunction • Airbag sensor assembly malfunction	• Steering wheel pad (D squib) • Spiral cable • Airbag sensor assembly • Wire harness

WIRING DIAGRAM

See page DI–467.

INSPECTION PROCEDURE

1	**Prepare for inspection (See step 1 on page DI–543).**

2	**Check D squib circuit.**

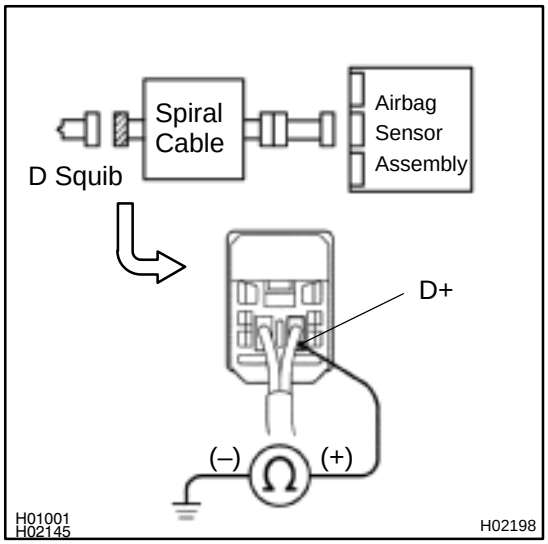

CHECK:

For the connector (on the spiral cable side) between the spiral cable and the steering wheel pad, measure the resistance between D+ and body ground.

OK:

Resistance: 1 MΩ or Higher

NG → **Go to step 5.**

OK

3	Check airbag sensor assembly.

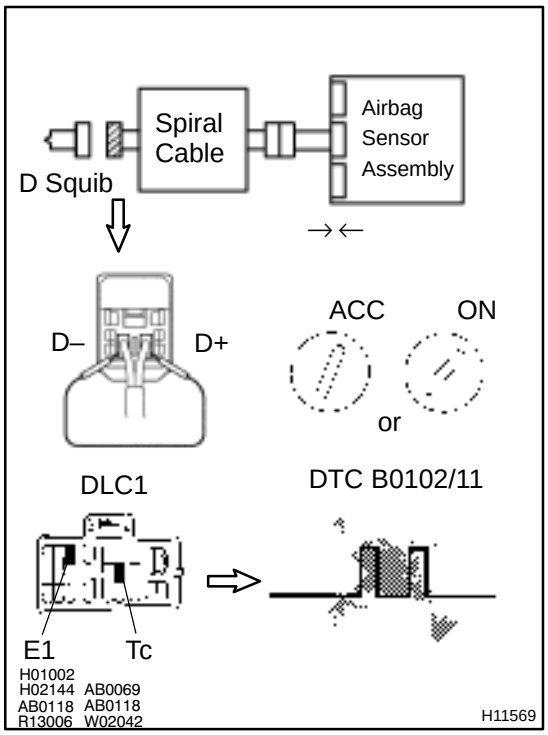

PREPARATION:

(a) Connect the connector to the airbag sensor assembly.
(b) Using a service wire, connect D+ and D– of the connector (on the spiral cable side) between the spiral cable and the steering wheel pad.
(c) Connect negative (–) terminal cable to the battery, and wait at least for 2 seconds.

CHECK:

(a) Turn the ignition switch to ACC or ON, and wait at least for 20 seconds.
(b) Clear the DTC stored in memory
(See step 5 on page DI–456).
(c) Turn the ignition switch to LOCK, and wait at least for 20 seconds.
(d) Turn the ignition switch to ACC or ON, and wait at least for 20 seconds.
(e) Check the DTC (See page DI–456).

OK:

DTC B0102/11 is not output.

HINT:
Codes other than code B0102/11 may be output at this time, but they are not relevant to this check.

NG	Replace airbag sensor assembly.

OK

4	Check D squib.

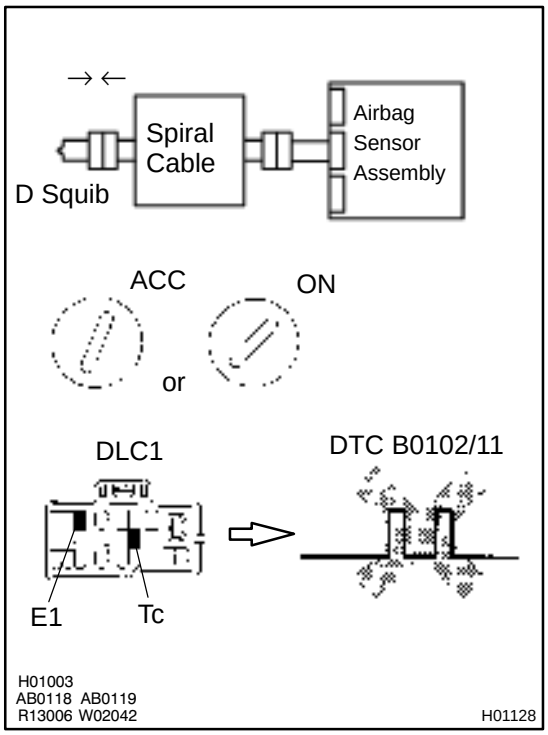

PREPARATION:

(a) Turn the ignition switch to LOCK.
(b) Disconnect negative (–) terminal cable from the battery, and wait at least for 90 seconds.
(c) Connect the steering wheel pad connector.
(d) Connect negative (–) terminal cable to the battery, and wait at least for 2 seconds.

CHECK:

(a) Turn the ignition switch to ACC or ON, and wait at least for 20 seconds.
(b) Clear the DTC stored in memory
(See step 5 on page DI–456).
(c) Turn the ignition switch to LOCK, and wait at least for 20 seconds.
(d) Turn the ignition switch to ACC or ON, and wait at least for 20 seconds.
(e) Check the DTC (See page DI–456).

OK:

DTC B0102/11 is not output.

HINT:
Codes other than code B0102/11 may be output at this time, but they are not relevant to this check.

NG → **Replace steering wheel pad.**

OK

From the results of the above inspection, the malfunctioning part can now be considered normal. To make sure of this, use the simulation method to check. If the malfunctioning part can not be detected by the simulation method, replace all SRS components including the wire harness.

5	Check spiral cable.

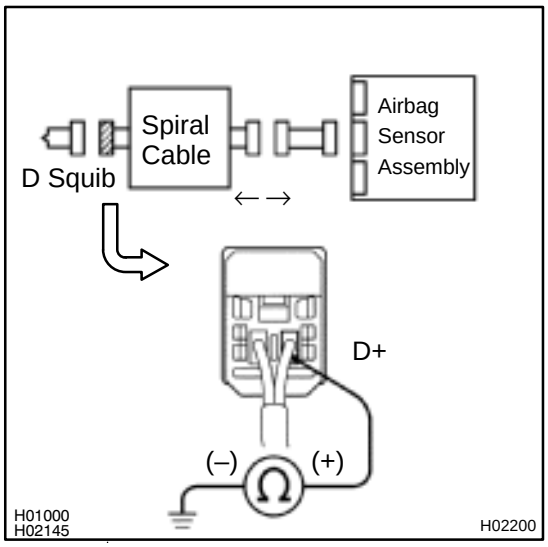

PREPARATION:
Disconnect the connector between the airbag sensor assembly and the spiral cable.

CHECK:
For the connector (on the spiral cable side) between the steering wheel pad and the spiral cable, measure the resistance between D+ and body ground.

OK:

Resistance: 1 MΩ or Higher

NG → **Repair or replace spiral cable.**

OK

6	Check harness between airbag sensor assembly and spiral cable.

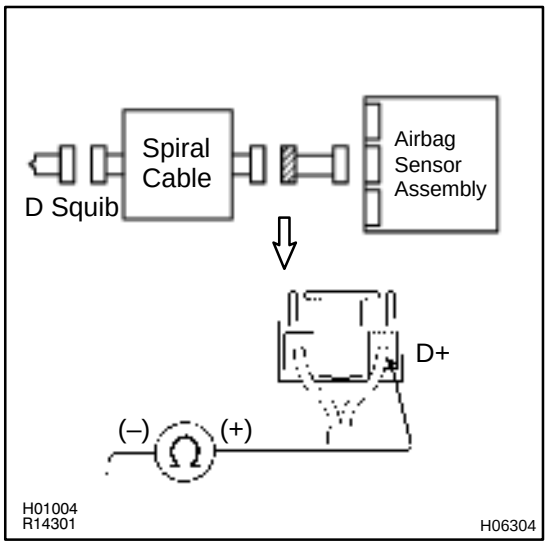

CHECK:
For the connector (on the spiral cable side) between the spiral cable and the airbag sensor assembly, measure the resistance between D+ and body ground.

OK:

Resistance: 1 MΩ or Higher

NG → **Repair or replace harness between airbag sensor assembly and spiral cable.**

OK

From the results of the above inspection, the malfunctioning part can now be considered normal. To make sure of this, use the simulation method to check. If the malfunctioning part can not be detected by the simulation method, replace all SRS components including the wire harness.

DI55C–02

DTC	B0103/12	Short in D Squib Circuit (to B+)

CIRCUIT DESCRIPTION

The D squib circuit consists of the airbag sensor assembly, spiral cable and steering wheel pad.
It causes the SRS to deploy when the SRS deployment conditions are satisfied.
For details of the function of each component, see OPERATION on page RS–2.
DTC B0103/12 is recorded when a B+ short is detected in the D squib circuit.

DTC No.	DTC Detecting Condition	Trouble Area
B0103/12	• Short circuit in D squib wire harness (to B+) • D squib malfunction • Spiral cable malfunction • Airbag sensor assembly malfunction	• Steering wheel pad (D squib) • Spiral cable • Airbag sensor assembly • Wire harness

WIRING DIAGRAM

See page DI–467.

INSPECTION PROCEDURE

1	**Prepare for inspection (See step 1 on page DI–543).**

2	**Check D squib circuit.**

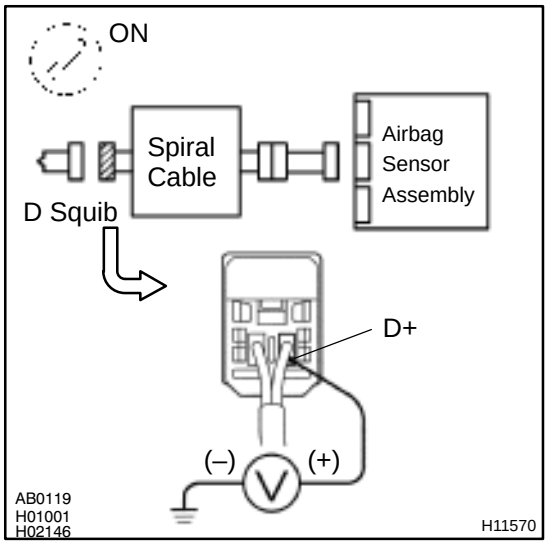

CHECK:

(a) Turn ignition switch to ON.

(b) For the connector (on the spiral cable side) between the spiral cable and the steering wheel pad, measure the voltage between D+ and body ground.

OK:

Voltage: 0 V

NG → **Go to step 5.**

OK

3	Check airbag sensor assembly.

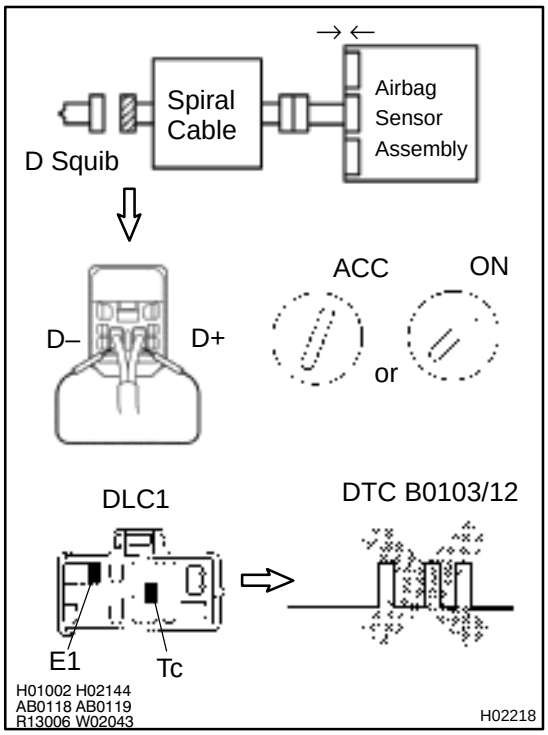

PREPARATION:

(a) Connect the connector to the airbag sensor assembly.
(b) Using a service wire, connect D+ and D– of the connector (on the spiral cable side) between the spiral cable and the steering wheel pad.
(c) Connect negative (–) terminal cable to the battery, and wait at least for 2 seconds.

CHECK:

(a) Turn the ignition switch to ACC or ON, and wait at least for 20 seconds.
(b) Clear the DTC stored in memory
(See step 5 on page DI–456).
(c) Turn the ignition switch to LOCK, and wait at least for 20 seconds.
(d) Turn the ignition switch to ACC or ON, and wait at least for 20 seconds.
(e) Check the DTC (See page DI–456).

OK:

DTC B0103/12 is not output.

HINT:
Codes other than code B0103/12 may be output at this time, but they are not relevant to this check.

NG → **Replace airbag sensor assembly.**

OK

4	Check D squib.

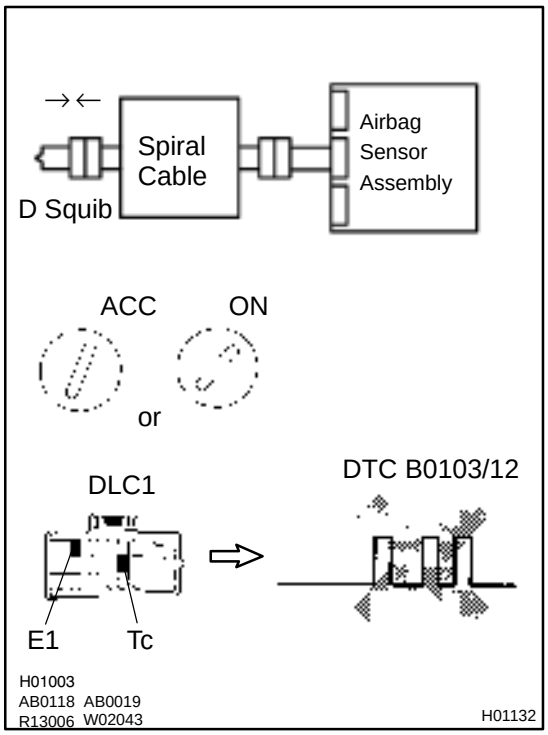

PREPARATION:

(a) Turn the ignition switch to LOCK.
(b) Disconnect negative (–) terminal cable from the battery, and wait at least for 90 seconds.
(c) Connect the steering wheel pad connector.
(d) Connect negative (–) terminal cable to the battery, and wait at least for 2 seconds.

CHECK:

(a) Turn the ignition switch to ACC or ON, and wait at least for 20 seconds.
(b) Clear the DTC stored in memory
(See step 5 on page DI–456).
(c) Turn the ignition switch to LOCK, and wait at least for 20 seconds.
(d) Turn the ignition switch to ACC or ON, and wait at least for 20 seconds.
(e) Check the DTC (See page DI–456).

OK:

DTC B0103/12 is not output.

HINT:
Codes other than code B0103/12 may be output at this time, but they are not relevant to this check.

NG → **Replace steering wheel pad.**

OK

From the results of the above inspection, the malfunctioning part can now be considered normal. To make sure of this, use the simulation method to check. If the malfunctioning part can not be detected by the simulation method, replace all SRS components including the wire harness.

5	Check spiral cable.

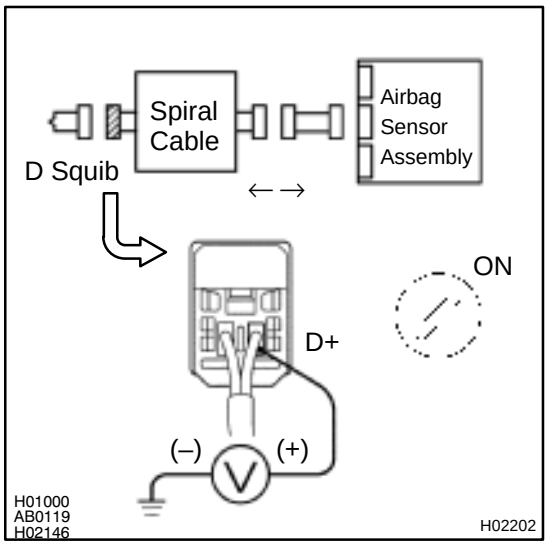

PREPARATION:

(a) Turn the ignition switch to LOCK.

(b) Disconnect the connector between the airbag sensor assembly and the spiral cable.

CHECK:

(a) Turn the ignition switch to ON.

(b) For the connector (on the spiral cable side) between the spiral cable and the steering wheel pad, measure the voltage between D+ and body ground.

OK:

Voltage: 0 V

NG → **Repair or replace spiral cable.**

OK

6	Check harness between airbag sensor assembly and spiral cable.

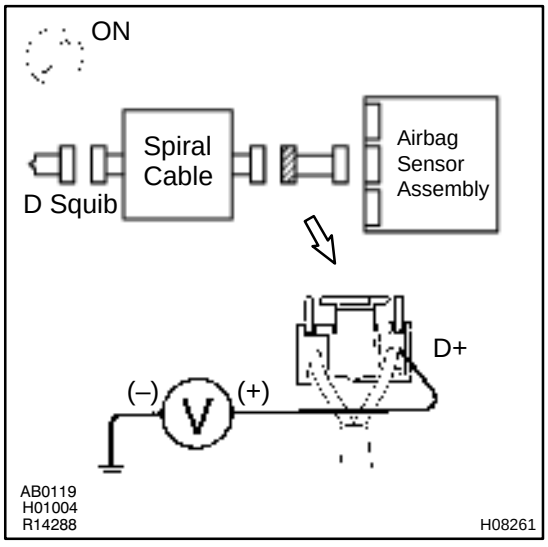

CHECK:

(a) Turn the ignition switch to ON.

(b) For the connector (on the spiral cable side) between the spiral cable and airbag sensor assembly, measure the voltage between D+ and body ground.

OK:

Voltage: 0 V

NG → **Repair or replace harness between airbag sensor assembly and spiral cable.**

OK

From the results of the above inspection, the malfunctioning part can now be considered normal. To make sure of this, use the simulation method to check. If the malfunctioning part can not be detected by the simulation method, replace all SRS components including the wire harness.

DI69Q–01

DTC	B0105/53	Short in P Squib Circuit

CIRCUIT DESCRIPTION

The P squib circuit consists of the airbag sensor assembly and front passenger airbag assembly.
It causes the SRS to deploy when the SRS deployment conditions are satisfied.
For details of the function of each component, see OPERATION on page RS–2.
DTC B0105/53 is recorded when a short is detected in the P squib circuit.

DTC No.	DTC Detecting Condition	Trouble Area
B0105/53	• Short circuit in P squib wire harness • P squib malfunction • Airbag sensor assembly malfunction	• Front passenger airbag assembly (P squib) • Passenger airbag manual on–off switch • Airbag sensor assembly • Wire harness

WIRING DIAGRAM

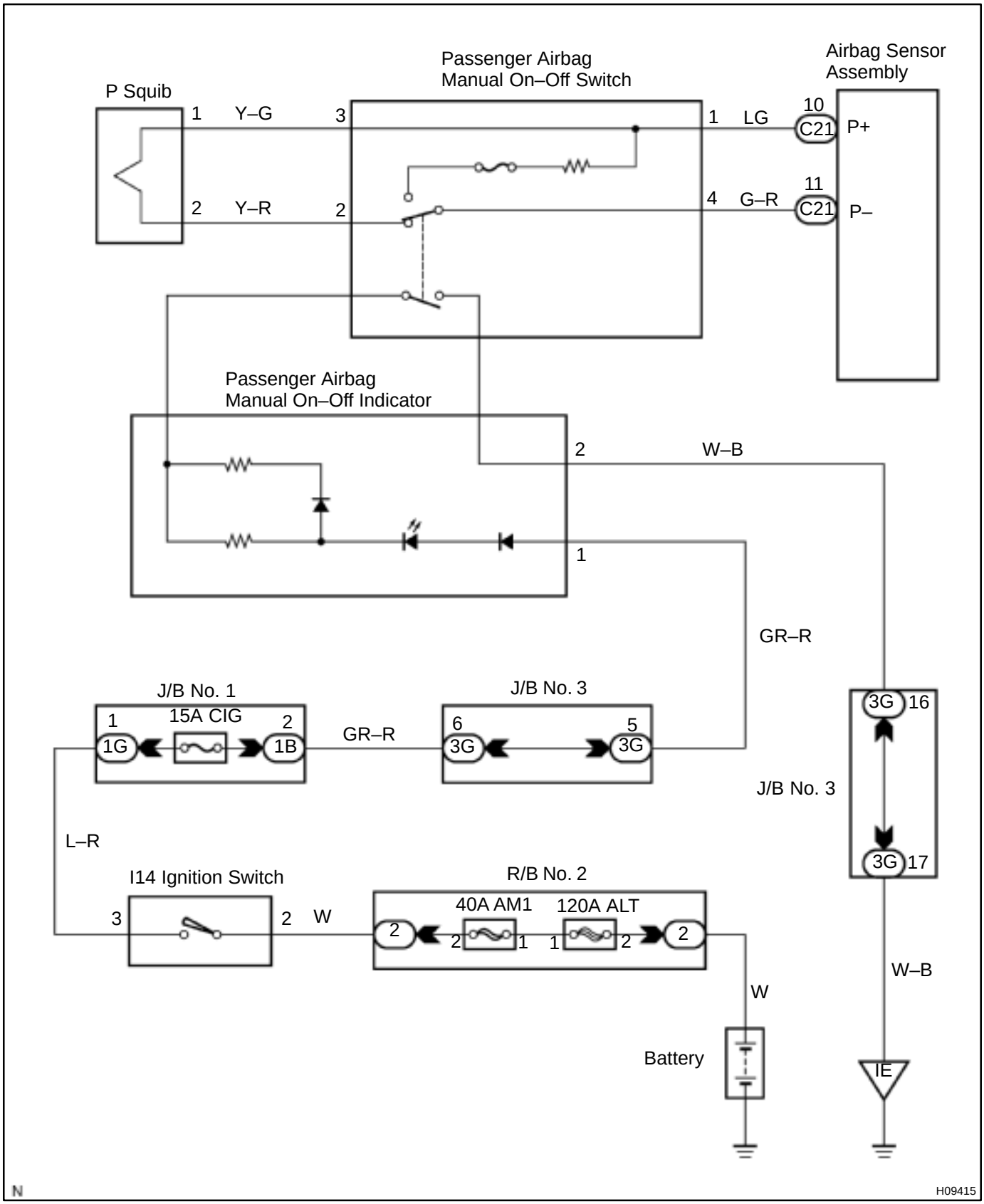

INSPECTION PROCEDURE

1	**Prepare for inspection (See step 1 on page DI–543).**

2	**Check passenger airbag manual on–off switch (See page RS–48).**

NG → **Replace passenger airbag manual on–off switch.**

OK

3	**Check P squib circuit.**

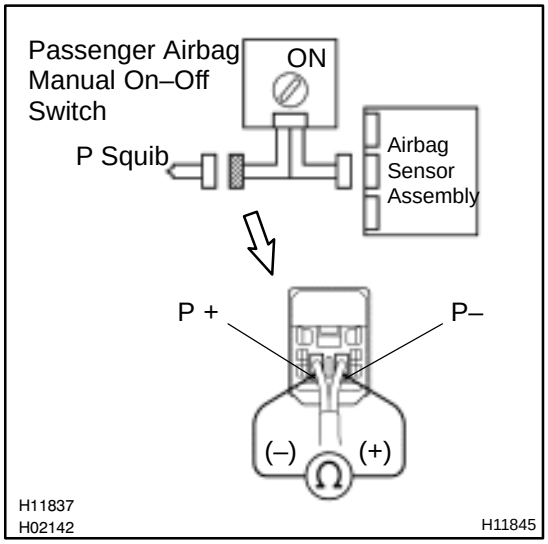

PREPARATION:

(a) Turn the passenger airbag manual on–off switch to ON.

(b) Release the airbag activation prevention mechanism of the connector (on the airbag sensor assembly side) between the front passenger airbag assembly and the airbag sensor assembly (See page DI–456).

CHECK:

For the connector (on the front passenger airbag assembly side) between the front passenger airbag assembly and the airbag sensor assembly, measure the resistance between P+ and P–.

OK:

Resistance: 1 MΩ or Higher

NG → **Repair or replace harness or connector between front passenger airbag assembly and airbag sensor assembly.**

OK

4	**Check airbag sensor assembly.**

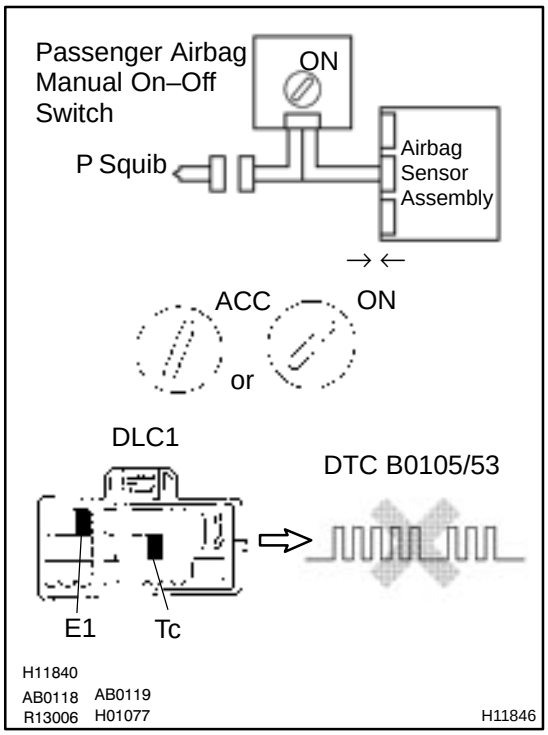

PREPARATION:

(a) Turn the passenger airbag manual on–off switch to ON.
(b) Connect the connector to the airbag sensor assembly.
(c) Connect negative (–) terminal cable to the battery, and wait at least for 2 seconds.

CHECK:

(a) Turn the ignition switch to ACC or ON and wait at least for 20 seconds.
(b) Clear the DTC stored in memory (See page DI–456).
(c) Turn the ignition switch to LOCK, and wait at least for 20 seconds.
(d) Turn the ignition switch to ACC or ON, and wait at least for 20 seconds.
(e) Check the DTC (See page DI–456).

OK:

DTC B0105/53 is not output.

HINT:

Codes other than code B0105/53 may be output at this time, but they are not relevant to this check.

NG → **Replace airbag sensor assembly.**

OK

5	Check P squib.

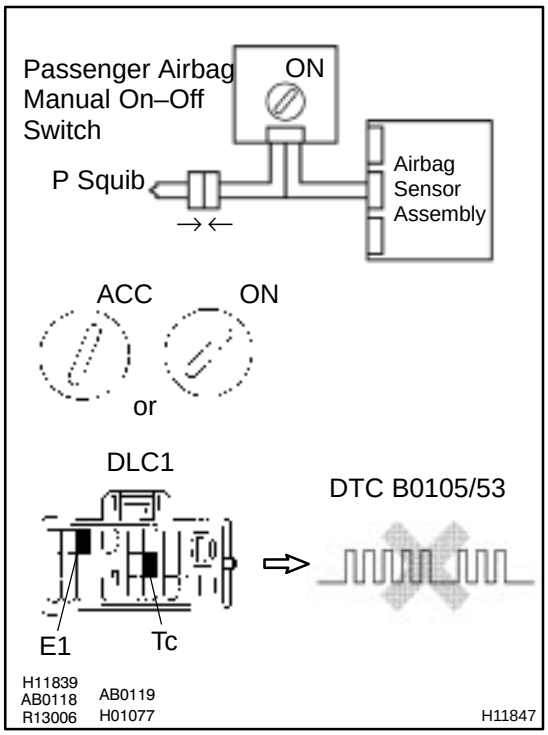

PREPARATION:

(a) Turn the passenger airbag manual on–off switch to ON.
(b) Turn the ignition switch to LOCK.
(c) Disconnect negative (–) terminal cable from the battery, and wait at least for 90 seconds.
(d) Connect the front passenger airbag assembly connector.
(e) Connect negative (–) terminal cable to the battery, and wait at least for 2 seconds.

CHECK:

(a) Turn the ignition switch to LOOK, and wait at least for 20 seconds.
(b) Turn the ignition switch to ACC or ON, and wait at least for 20 seconds.
(c) Clear the DTC stored in memory (See page DI–456).
(d) Turn the ignition switch to LOCK, and wait at least for 20 seconds.
(e) Turn the ignition switch to ACC or ON, and wait at least for 20 seconds.
(f) Check the DTC (See page DI–456).

OK:

DTC B0105/53 is not output.

HINT:
Codes other than code B0105/53 may be output at this time, but they are not relevant to this check.

NG → **Replace front passenger airbag assembly.**

OK

From the results of the above inspection, the malfunctioning part can now be considered normal. To make sure of this, use the simulation method to check.

DI69R–01

DTC	B0106/54	Open in P Squib Circuit

CIRCUIT DESCRIPTION

The P squib circuit consists of the airbag sensor assembly and front passenger airbag assembly.
It causes the SRS to deploy when the SRS deployment conditions are satisfied.
For details of the function of each component, see OPERATION on page RS–2.
DTC B0106/54 is recorded when an open is detected in the P squib circuit.

DTC No.	DTC Detecting Condition	Trouble Area
B0106/54	• Open circuit in P+ wire harness or P– wire harness of squib • P squib malfunction • Airbag sensor assembly malfunction	• Front passenger airbag assembly (P squib) • Passenger airbag manual on–off switch • Airbag sensor assembly • Wire harness

WIRING DIAGRAM

See page DI–484.

INSPECTION PROCEDURE

1	**Prepare for inspection (See step 1 on page DI–543).**

2	**Check passenger airbag manual on–off switch (See page RS–48).**

NG → **Replace passenger airbag manual on–off switch.**

OK

3	Check P squib circuit.

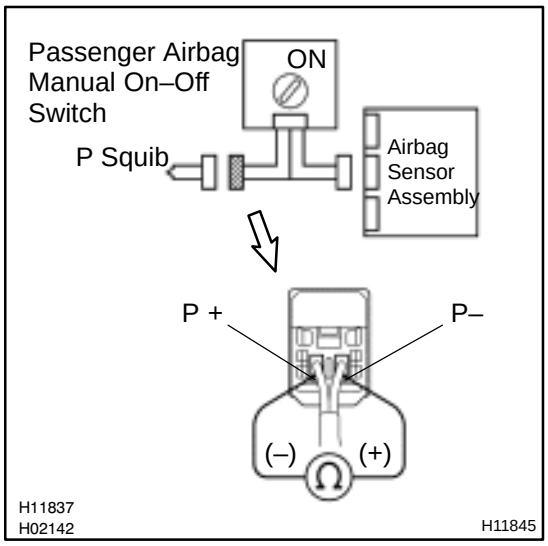

PREPARATION:

Turn the passenger airbag manual on–off switch to ON.

CHECK:

For the connector (on the front passenger airbag assembly side) between the front passenger airbag assembly and the airbag sensor assembly, measure the resistance between P+ and P–.

OK:

Resistance: Below 1 Ω

NG → **Repair or replace harness or connector between front passenger airbag assembly and airbag sensor assembly.**

OK

4	Check airbag sensor assembly.

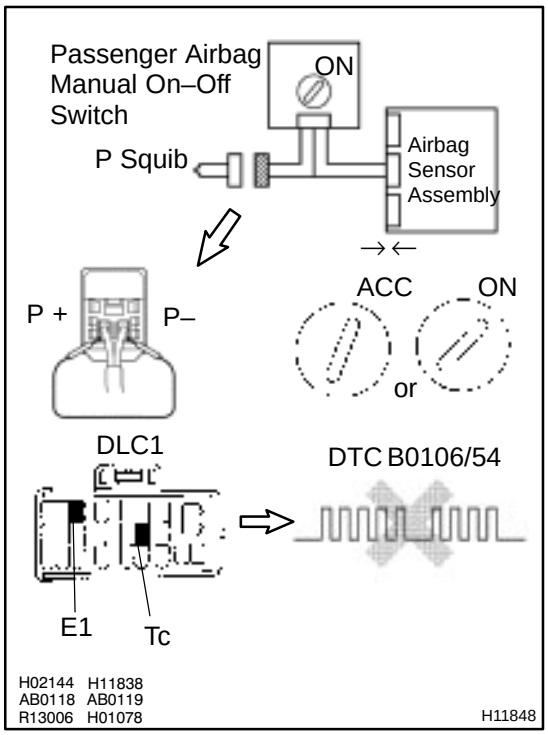

PREPARATION:

(a) Turn the passenger airbag manual on–off switch to ON.
(b) Connect the connector to the airbag sensor assembly.
(c) Using a service wire, connect P+ and P– of the connector (on the front passenger airbag assembly side) between the front passenger airbag assembly and the airbag sensor assembly.
(d) Connect negative (–) terminal cable to the battery, and wait at least for 2 seconds.

CHECK:

(a) Turn the ignition switch to ACC or ON and wait at least for 20 seconds.
(b) Clear the DTC stored in memory (See page DI–456).
(c) Turn the ignition switch to LOCK, and wait at least for 20 seconds.
(d) Turn the ignition switch to ACC or ON, and wait at least for 20 seconds.
(e) Check the DTC (See page DI–456).

OK:

DTC B0106/54 is not output.

HINT:

Codes other than code B0106/54 may be output at this time, but they are not relevant to this check.

NG → **Replace airbag sensor assembly.**

OK

5	Check P squib.

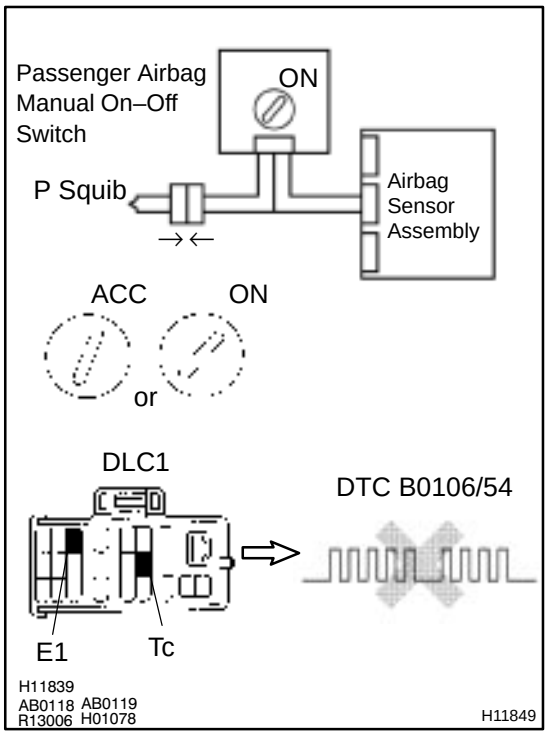

PREPARATION:

(a) Turn the passenger airbag manual on–off switch to ON.
(b) Turn the ignition switch to LOCK.
(c) Disconnect negative (–) terminal cable from the battery, and wait at least for 90 seconds.
(d) Connect the front passenger airbag assembly connector.
(e) Connect negative (–) terminal cable to the battery, and wait at least for 2 seconds.

CHECK:

(a) Turn the ignition switch to ACC or ON, and wait at least for 20 seconds.
(b) Clear the DTC stored in memory (See page DI–456).
(c) Turn the ignition switch to LOCK, and wait at least for 20 seconds.
(d) Turn the ignition switch to ACC or ON, and wait at least for 20 seconds.
(e) Check the DTC (See page DI–456).

OK:

DTC B0106/54 is not output.

HINT:
Codes other than code B0106/54 may be output at this time, but they are not relevant to this check.

NG → **Replace front passenger airbag assembly.**

OK →

From the results of the above inspection, the malfunctioning part can now be considered normal. To make sure of this, use the simulation method to check.

DI18W–03

DTC	B0107/51	Short in P Squib Circuit (to Ground)

CIRCUIT DESCRIPTION

The P squib circuit consists of the airbag sensor assembly and front passenger airbag assembly.
It causes the SRS to deploy when the SRS deployment conditions are satisfied.
For details of the function of each component, see OPERATION on page RS–2.
DTC B0107/51 is recorded when ground short is detected in the P squib circuit.

DTC No.	DTC Detecting Condition	Trouble Area
B0107/51	• Short circuit in P squib wire harness (to ground) • P squib malfunction • Airbag sensor assembly malfunction	• Front passenger airbag assembly (P squib) • Passenger airbag manual on–off switch • Airbag sensor assembly • Wire harness

WIRING DIAGRAM

See page DI–484.

INSPECTION PROCEDURE

1	**Prepare for inspection (See step 1 on page DI–543).**

2	**Check passenger airbag manual on–off switch (See page RS–48).**

NG → **Replace passenger airbag manual on–off switch.**

OK

3	Check P squib circuit.

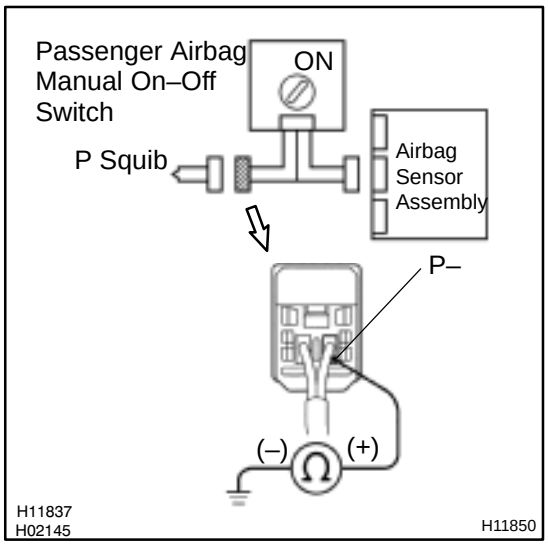

PREPARATION:

Turn the passenger airbag manual on–off switch to ON.

CHECK:

For the connector (on the front passenger airbag assembly side) between the front passenger airbag assembly and the airbag sensor assembly, measure the resistance between P+ and body ground.

OK:

Resistance: 1 MΩ or Higher

NG → **Repair or replace harness or connector between front passenger airbag assembly and airbag sensor assembly.**

OK

4	**Check airbag sensor assembly.**

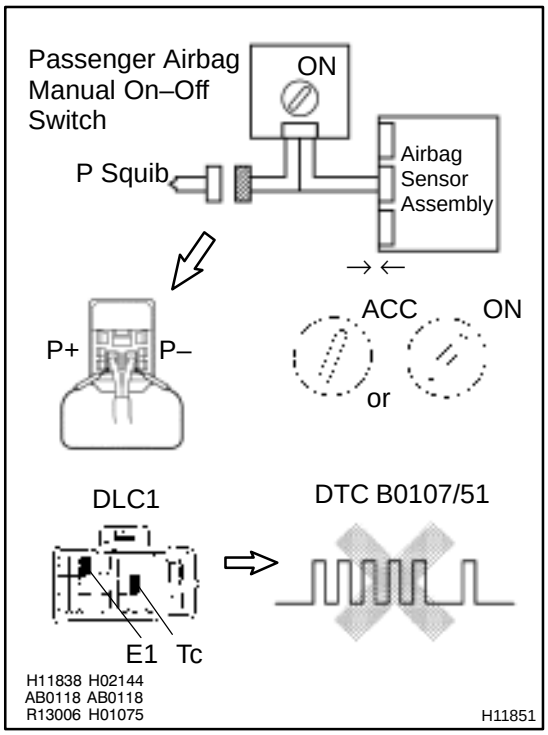

PREPARATION:

(a) Turn the passenger airbag manual on–off switch to ON.
(b) Connect the connector to the airbag sensor assembly.
(c) Using a service wire, connect P+ and P– of the connector (on the front passenger airbag assembly side) between the front passenger airbag assembly and the airbag sensor assembly.
(d) Connect negative (–) terminal cable to the battery, and wait at least for 2 seconds.

CHECK:

(a) Turn the ignition switch to ACC or ON and wait at least for 20 seconds.
(b) Clear the DTC stored in memory (See step 5 on page DI–456).
(c) Turn the ignition switch to LOCK, and wait at least for 20 seconds.
(d) Turn the ignition switch to ACC or ON, and wait at least for 20 seconds.
(e) Check the DTC (See page DI–456).

OK:

DTC B0107/51 is not output.

HINT:
Codes other than code B0107/51 may be output at this time, but they are not relevant to this check.

NG → **Replace airbag sensor assembly.**

OK

5	Check P squib.

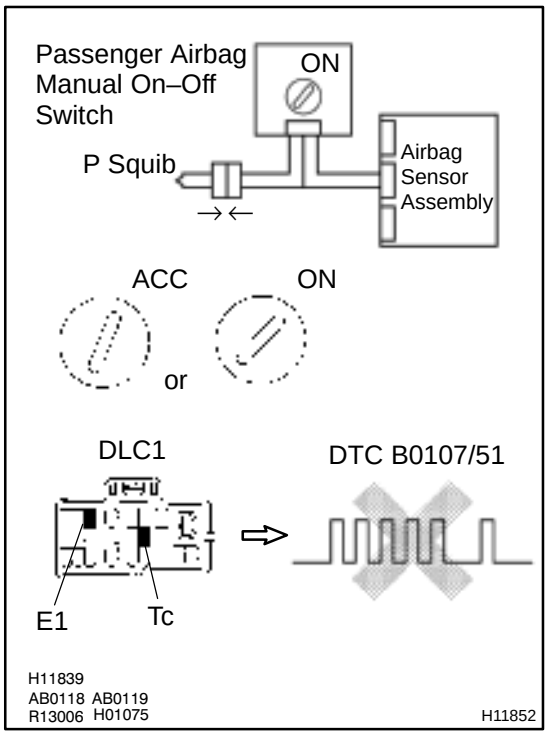

PREPARATION:

(a) Turn the passenger airbag manual on–off switch to ON.
(b) Turn the ignition switch to LOCK.
(c) Disconnect negative (–) terminal cable from the battery, and wait at least for 90 seconds.
(d) Connect the front passenger airbag assembly connector.
(e) Connect negative (–) terminal cable to the battery, and wait at least for 2 seconds.

CHECK:

(a) Turn the ignition switch to ACC or ON, and wait at least for 20 seconds.
(b) Clear the DTC stored in memory
(See step 5 on page DI–456).
(c) Turn the ignition switch to LOCK, and wait at least for 20 seconds.
(d) Turn the ignition switch to ACC or ON, and wait at least for 20 seconds.
(e) Check the DTC (See page DI–456).

OK:

DTC B0107/51 is not output.

HINT:
Codes other than code B0107/51 may be output at this time, but they are not relevant to this check.

NG → **Replace front passenger airbag assembly.**

OK

From the results of the above inspection, the malfunctioning part can now be considered normal. To make sure of this, use the simulation method to check. If the malfunctioning part can not be detected by the simulation method, replace all SRS components including the wire harness.

DI18X–03

DTC	B0108/52	Short in P Squib Circuit (to B+)

CIRCUIT DESCRIPTION

The P squib circuit consists of the airbag sensor assembly and front passenger airbag assembly.
It causes the SRS to deploy when the SRS deployment conditions are satisfied.
For details of the function of each component, see OPERATION on page RS–2.
DTC B0108/52 is recorded when a B+ short is detected in the P squib circuit.

DTC No.	DTC Detecting Condition	Trouble Area
B0108/52	• Short circuit in P squib wire harness (to B+) • P squib malfunction • Airbag sensor assembly malfunction	• Front passenger airbag assembly (P squib) • Passenger airbag manual on–off switch • Airbag sensor assembly • Wire harness

WIRING DIAGRAM

See page DI–484.

INSPECTION PROCEDURE

1	**Prepare for inspection (See step 1 on page DI–543).**

2	**Check passenger airbag manual on–off switch (See page RS–48).**

NG → **Replace passenger airbag manual on–off switch.**

OK

3	Check P squib circuit.

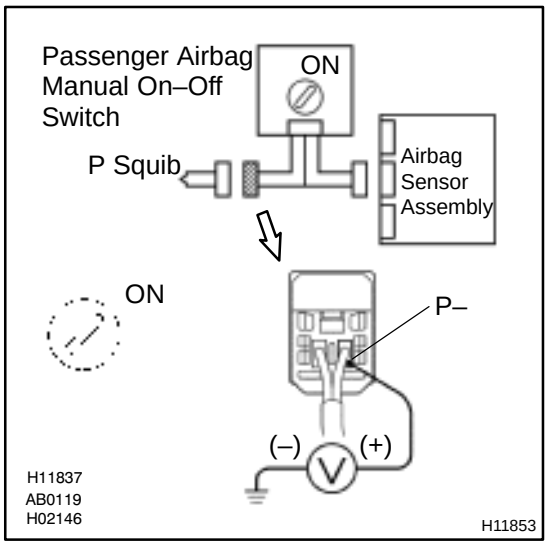

PREPARATION:

Turn the passenger airbag manual on–off switch to ON.

CHECK:

(a) Turn the ignition switch to ON.

(b) For the connector (on the front passenger airbag assembly side) between the front passenger airbag assembly and the airbag sensor assembly, measure the voltage between the P+ and body ground.

OK:

Voltage: 0 V

NG → **Repair or replace harness or connector between front passenger airbag assembly and airbag sensor assembly.**

OK

4	Check airbag sensor assembly.

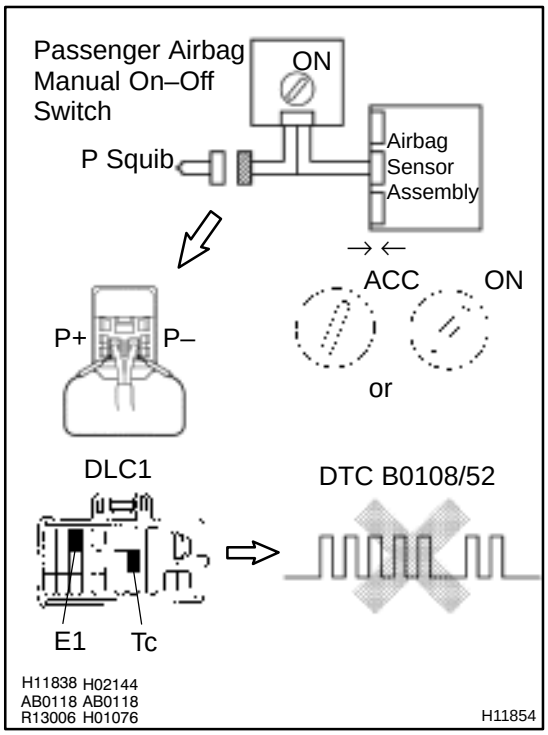

PREPARATION:

(a) Turn the passenger airbag manual on–off switch to ON.
(b) Connect the connector to the airbag sensor assembly.
(c) Using a service wire, connect P+ and P– of the connector (on the front passenger airbag assembly side) between the front passenger airbag assembly and the airbag sensor assembly.
(d) Connect negative (–) terminal cable to the battery, and wait at least for 2 seconds.

CHECK:

(a) Turn the ignition switch to ACC or ON and wait at least for 20 seconds.
(b) Clear the DTC stored in memory (See step 5 on page DI–456).
(c) Turn the ignition switch to LOCK, and wait at least for 20 seconds.
(d) Turn the ignition switch to ACC or ON, and wait at least for 20 seconds.
(e) Check the DTC (See page DI–456).

OK:

DTC B0108/52 is not output.

HINT:
Codes other than code B0108/52 may be output at this time, but they are not relevant to this check.

NG → **Replace airbag sensor assembly.**

OK

5	Check P squib.

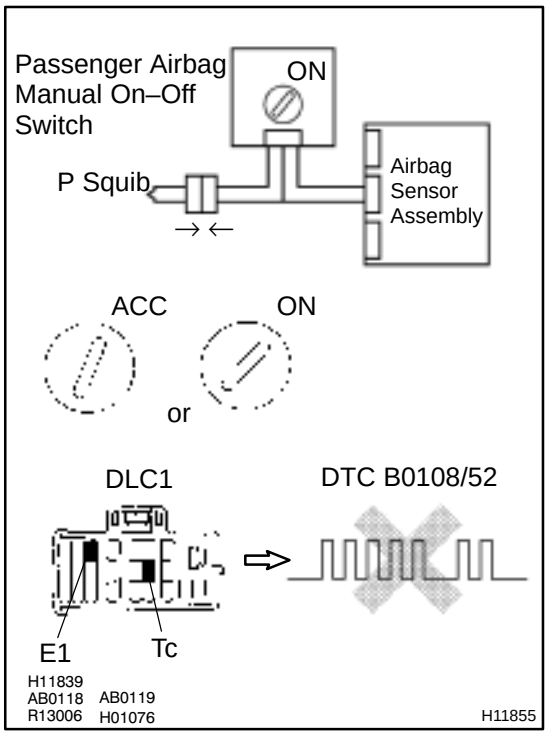

PREPARATION:

(a) Turn the passenger airbag manual on–off switch to ON.
(b) Turn the ignition switch to LOCK.
(c) Disconnect negative (–) terminal cable from the battery, and wait at least for 90 seconds.
(d) Connect the front passenger airbag assembly connector.
(e) Connect negative (–) terminal cable to the battery, and wait at least for 2 seconds.

CHECK:

(a) Turn the ignition switch to ACC or ON, and wait at least for 20 seconds.
(b) Clear the DTC stored in memory
(See step 5 on page DI–456).
(c) Turn the ignition switch to LOCK, and wait at least for 20 seconds.
(d) Turn the ignition switch to ACC or ON, and wait at least for 20 seconds.
(e) Check the DTC (See page DI–456).

OK:

DTC B0108/52 is not output.

HINT:
Codes other than code B0108/52 may be output at this time, but they are not relevant to this check.

NG → **Replace front passenger airbag assembly.**

OK

From the results of the above inspection, the malfunctioning part can now be considered normal. To make sure of this, use the simulation method to check. If the malfunctioning part can not be detected by the simulation method, replace all SRS components including the wire harness.

DI55D–02

DTC	B0130/63	Short in P/T Squib (RH) Circuit

CIRCUIT DESCRIPTION

The P/T squib (RH) circuit consists of the airbag sensor assembly and seat belt pretensioner (RH).
It causes the SRS to deploy when the SRS deployment conditions are satisfied.
For details of the function of each component, see OPERATION on page RS–2.
DTC B0130/63 is recorded when a short is detected in the P/T squib (RH) circuit.

DTC No.	DTC Detecting Condition	Trouble Area
B0130/63	• Short circuit between PR+ wire harness and PR– wire harness of squib • P/T squib (RH) malfunction • Airbag sensor assembly malfunction	• Seat belt pretensioner (RH) • Airbag sensor assembly • Wire harness

WIRING DIAGRAM

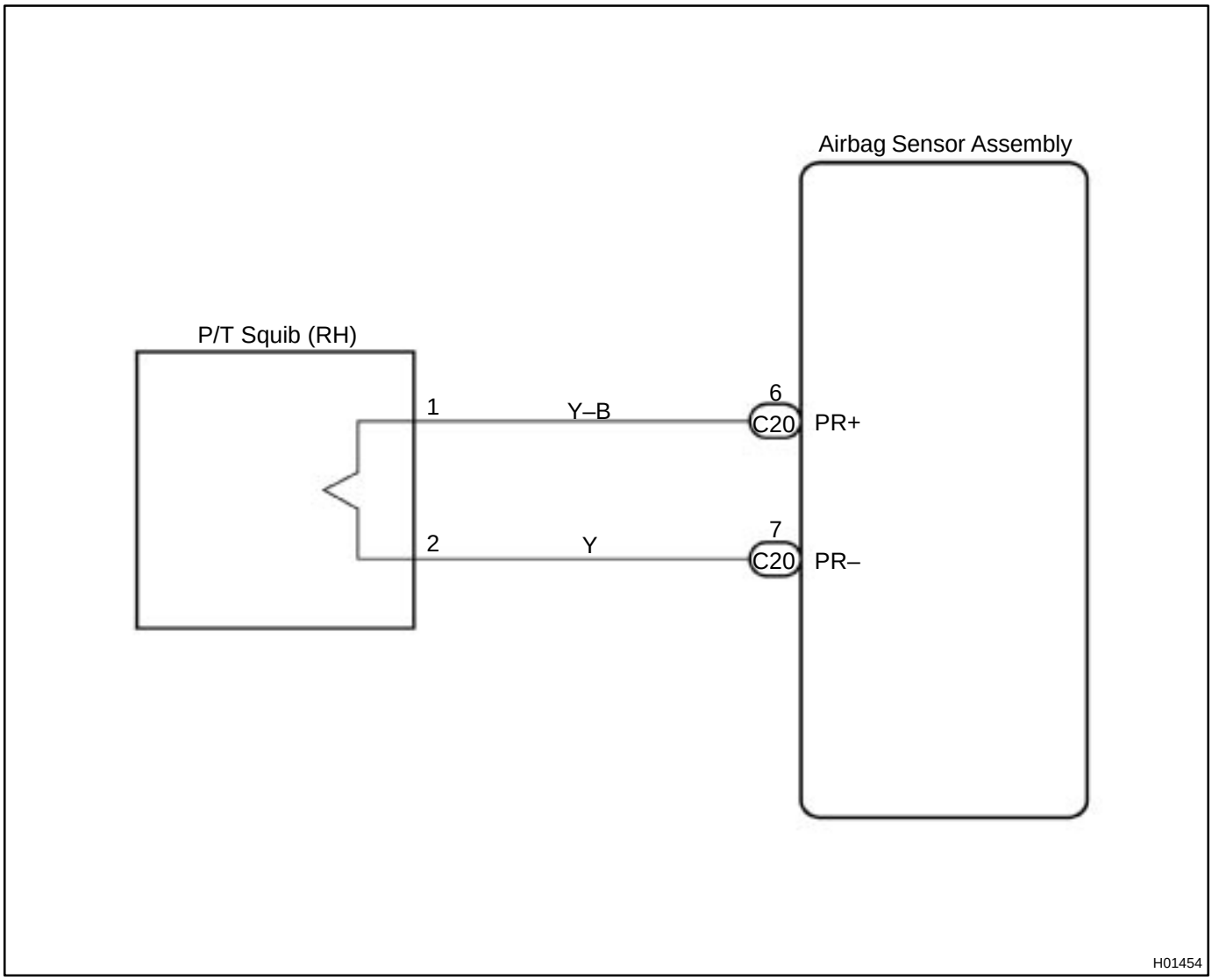

INSPECTION PROCEDURE

1	**Prepare for inspection. (See step 1 on page DI–543)**

2	**Check P/T squib (RH) circuit.**

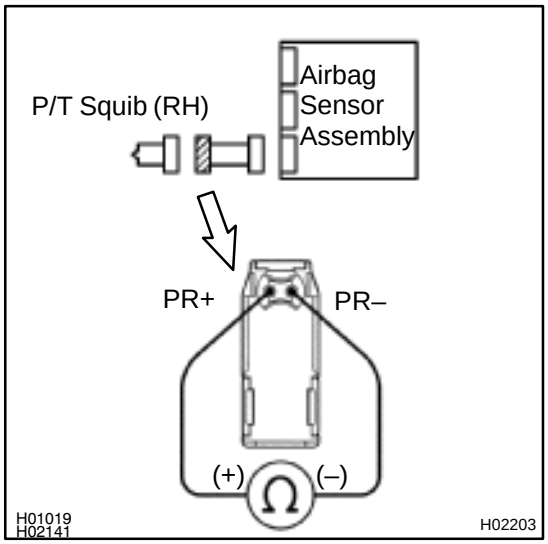

PREPARATION:

Release the airbag activation prevention mechanism of the connector (on the airbag sensor assembly side) between the airbag sensor assembly and the seat belt pretensioner (RH). (See page DI–456).

CHECK:

For the connector (on the seat belt pretensioner side) between the seat belt pretensioner (RH) and the airbag sensor assembly, measure the resistance between PR+ and PR–.

OK:

Resistance: 1 MΩ or Higher

NG → **Repair or replace harness or connector between seat belt pretensioner (RH) and airbag sensor assembly.**

OK

3	Check airbag sensor assembly.

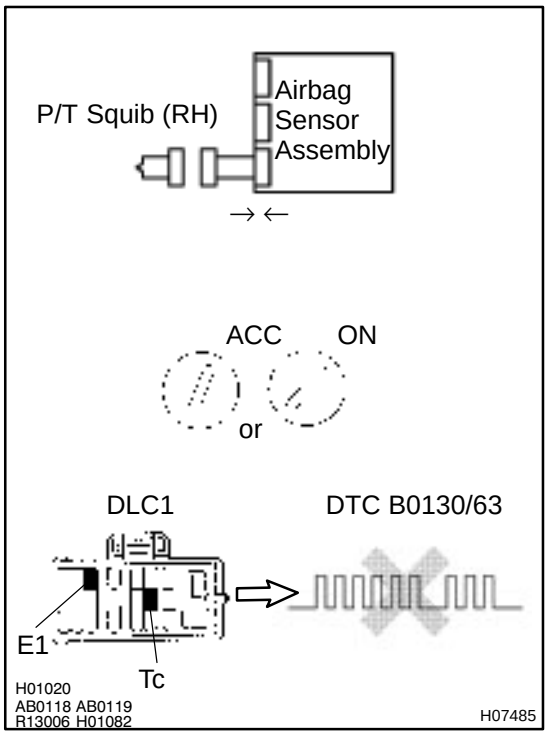

PREPARATION:

(a) Connect the connector to the airbag sensor assembly.
(b) Connect negative (–) terminal cable to the battery, and wait at least for 2 seconds.

CHECK:

(a) Turn ignition switch to ACC or ON and wait at least for 20 seconds.
(b) Clear DTC stored in memory.
(See page DI–456)
(c) Turn ignition switch to LOCK, and wait at least for 20 seconds.
(d) Turn ignition switch to ACC or ON, and wait at least for 20 seconds.
(e) Check DTC.
(See page DI–456)

OK:

DTC B0130/63 is not output.

HINT:
Codes other than code B0130/63 may be output at this time, but they are not relevant to this check.

NG → **Replace airbag sensor assembly.**

OK

4	Check P/T squib (RH).

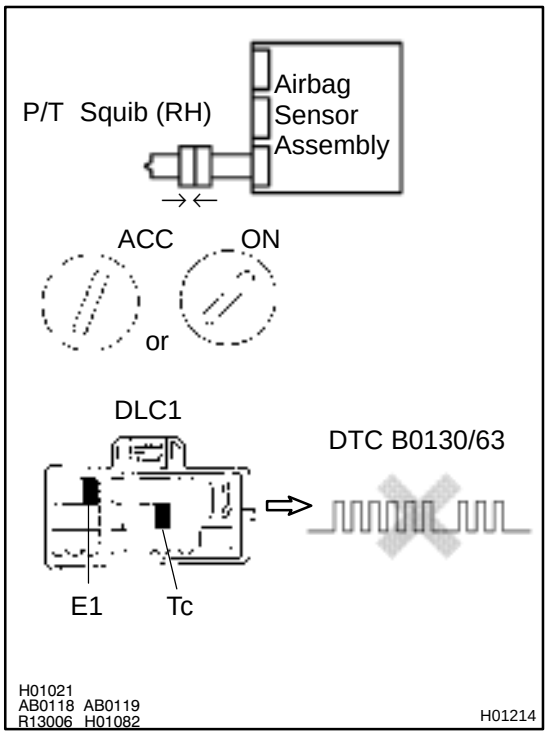

PREPARATION:

(a) Turn ignition switch to LOCK.
(b) Disconnect negative (–) terminal cable from the battery, and wait at least for 90 seconds.
(c) Connect the side airbag assembly (RH) connector.
(d) Connect negative (–) terminal cable to the battery, and wait at least for 2 seconds.

CHECK:

(a) Turn ignition switch to LOOK, and wait at least for 20 second.
(b) Turn ignition switch to ACC or ON, and wait at least for 20 seconds.
(c) Clear DTC stored in memory.
(See page DI–456)
(d) Turn ignition switch to LOCK, and wait at least for 20 seconds.
(e) Turn ignition switch to ACC or ON, and wait at least for 20 seconds.
(f) Check DTC.
(See page DI–456)

OK:

DTC B0130/63 is not output.

HINT:
Codes other than code B0130/63 may be output at this time, but they are not relevant to this check.

NG → **Replace seat belt pretensioner (RH).**

OK

From the results of the above inspection, the malfunctioning part can now be considered normal. To make sure of this, use the simulation method to check.

DI55E–01

DTC	B0131/64	Open in P/T Squib (RH) Circuit

CIRCUIT DESCRIPTION

The P/T squib circuit (RH) consists of the airbag sensor assembly and seat belt pretensioner (RH).
It causes the SRS to deploy when the SRS deployment conditions are satisfied.
For details of the function of each component, see OPERATION on page RS–2.
DTC B0131/64 is recorded when an open is detected in the P/T squib (RH) circuit.

DTC No.	DTC Detecting Condition	Trouble Area
B0131/64	• Open circuit in PR+ wire harness or PR– wire harness of squib • P/T squib (RH) malfunction • Airbag sensor assembly malfunction	• Seat belt pretensioner (RH) • Airbag sensor assembly • Wire harness

WIRING DIAGRAM

See page DI–501.

INSPECTION PROCEDURE

1	**Prepare for inspection. (See step 1 on page DI–543)**

2	**Check P/T squib (RH) circuit.**

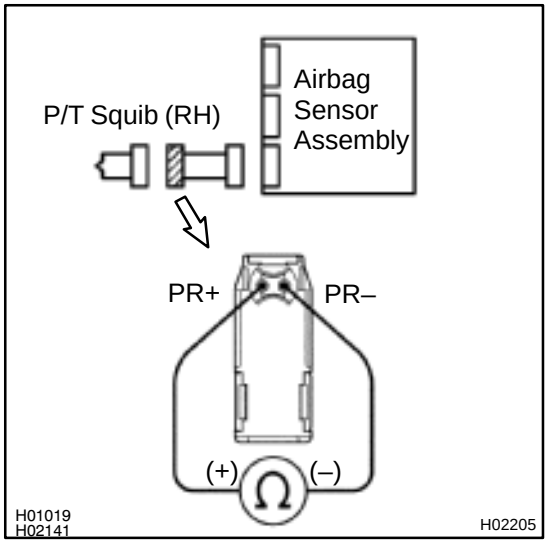

CHECK:

For the connector (on the seat belt pretensioner side) between the seat belt pretensioner (RH) and the airbag sensor assembly, measure the resistance between PR+ and PR–.

OK:

Resistance: Below 1 Ω

NG → **Repair or replace harness or connector between seat belt pretensioner (RH) and airbag sensor assembly.**

OK

3	Check airbag sensor assembly.

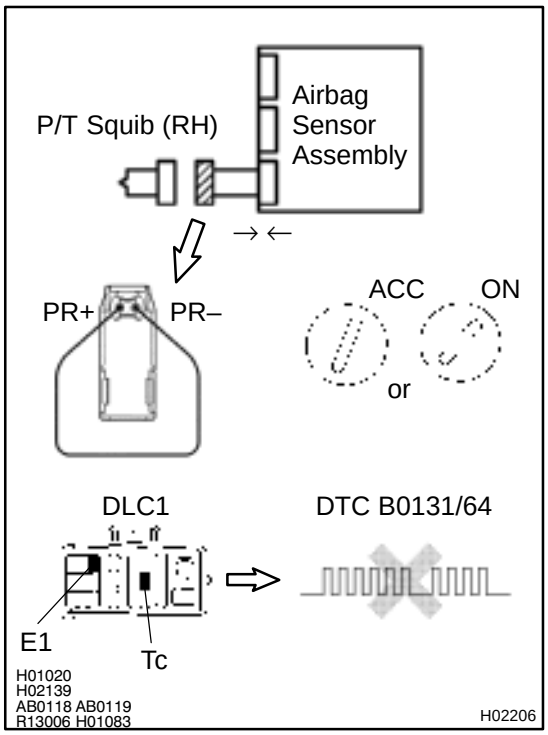

PREPARATION:

(a) Connect the connector to the airbag sensor assembly.

(b) Using a service wire, connect PR+ and PR– of the connector (on the seat belt pretensioner side) between the seat belt pretensioner (RH) and the airbag sensor assembly.

(c) Connect negative (–) terminal cable to the battery, and wait at least for 2 seconds.

CHECK:

(a) Turn ignition switch to ACC or ON and wait at least for 20 seconds.

(b) Clear DTC stored in memory.
(See page DI–456)

(c) Turn ignition switch to LOCK, and wait at least for 20 seconds.

(d) Turn ignition switch to ACC or ON, and wait at least for 20 seconds.

(e) Check DTC.
(See page DI–456)

OK:

DTC B0131/64 is not output.

HINT:
Codes other than code B0131/64 may be output at this time, but they are not relevant to this check.

NG → **Replace airbag sensor assembly.**

OK

4	Check P/T squib (RH).

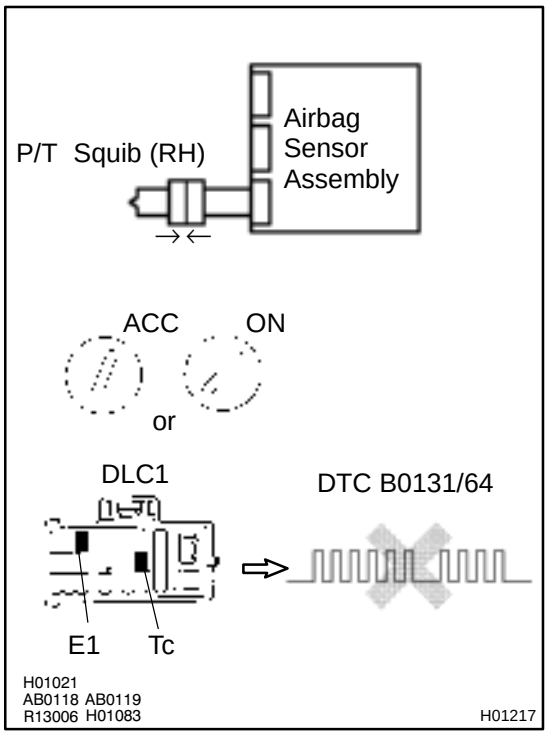

PREPARATION:

(a) Turn ignition switch to LOCK.
(b) Disconnect negative (–) terminal cable from the battery, and wait at least for 90 seconds.
(c) Connect the seat belt pretensioner (RH) connector.
(d) Connect negative (–) terminal cable to the battery, and wait at least for 2 seconds.

CHECK:

(a) Turn ignition switch to ACC or ON, and wait at least for 20 seconds.
(b) Clear DTC stored in memory.
(See page DI–456)
(c) Turn ignition switch to LOCK, and wait at least for 20 seconds.
(d) Turn ignition switch to ACC or ON, and wait at least for 20 seconds.
(e) Check DTC.
(See page DI–456)

OK:

DTC B0131/64 is not output.

HINT:
Codes other than code B0131/64 may be output at this time, but they are not relevant to this check.

NG → **Replace seat belt pretensioner (RH).**

OK

From the results of the above inspection, the malfunctioning part can now be considered normal. To make sure of this, use the simulation method to check.

DI55F–01

DTC	B0132/61	Short in P/T Squib (RH) Circuit (to Ground)

CIRCUIT DESCRIPTION

The P/T squib (RH) circuit consists of the airbag sensor assembly and seat belt pretensioner (RH).
It causes the SRS to deploy when the SRS deployment conditions are satisfied.
For details of the function of each component, see OPERATION on page RS–2.
DTC B0132/61 is recorded when a ground short is detected in the P/T squib (RH) circuit.

DTC No.	DTC Detecting Condition	Trouble Area
B0132/61	• Short circuit in P/T squib (RH) wire harness (to ground) • P/T squib (RH) malfunction • Airbag sensor assembly malfunction	• Seat belt pretensioner (RH) • Airbag sensor assembly • Wire harness

WIRING DIAGRAM

See page DI–501.

INSPECTION PROCEDURE

1	**Prepare for inspection. (See step 1 on page DI–543)**

2	**Check P/T squib (RH) circuit.**

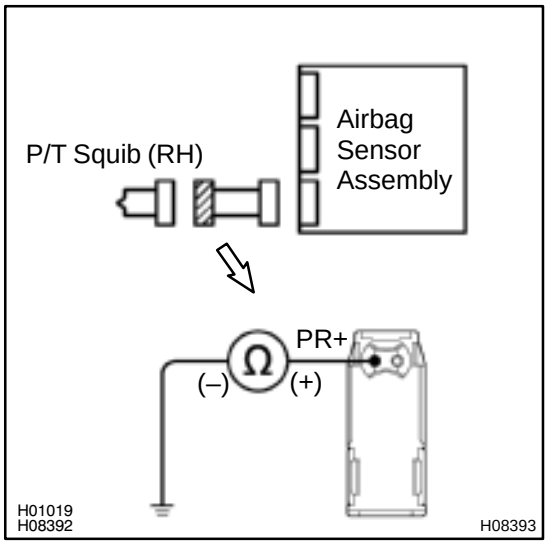

CHECK:

For the connector (on the seat belt pretensioner side) between the seat belt pretensioner (RH) and the airbag sensor assembly, measure the resistance between PR+ and body ground.

OK:

Resistance: 1 MΩ or Higher

NG → **Repair or replace harness or connector between seat belt pretensioner (RH) and airbag sensor assembly.**

OK

3	Check airbag sensor assembly.

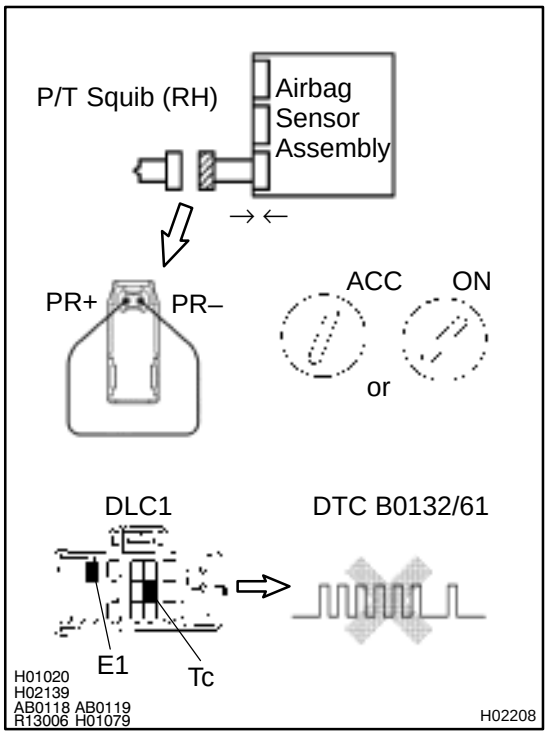

PREPARATION:

(a) Connect the connector to the airbag sensor assembly.

(b) Using a service wire, connect PR+ and PR– of the connector (on the seat belt pretensioner side) between the seat belt pretensioner (RH) and the airbag sensor assembly.

(c) Connect negative (–) terminal cable to the battery, and wait at least for 2 seconds.

CHECK:

(a) Turn ignition switch to ACC or ON and wait at least for 20 seconds.

(b) Clear DTC stored in memory.
(See step 5 on page DI–456)

(c) Turn ignition switch to LOCK, and wait at least for 20 seconds.

(d) Turn ignition switch to ACC or ON, and wait at least for 20 seconds.

(e) Check DTC.
(See page DI–456)

OK:

DTC B0132/61 is not output.

HINT:

Codes other than code B0132/61 may be output at this time, but they are not relevant to this check.

NG → **Replace airbag sensor assembly.**

OK

4	Check P/T squib (RH).

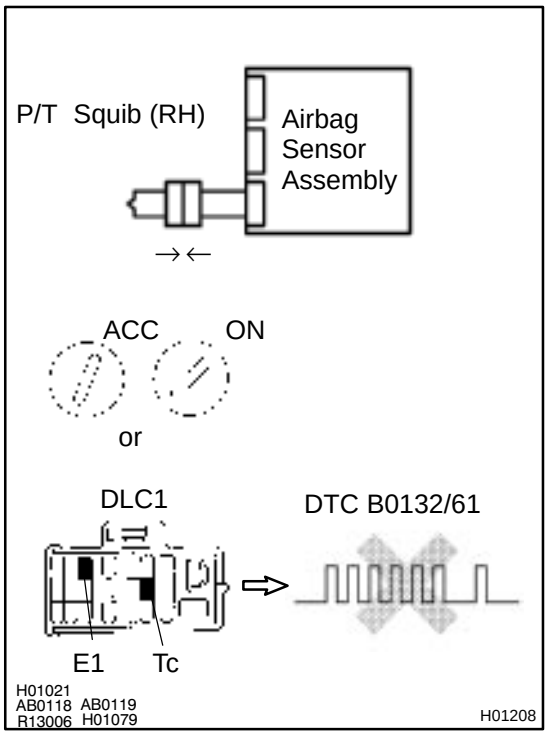

PREPARATION:

(a) Turn ignition switch to LOCK.
(b) Disconnect negative (–) terminal cable from the battery, and wait at least for 90 seconds.
(c) Connect the seat belt pretensioner (RH) connector.
(d) Connect negative (–) terminal cable to the battery, and wait at least for 2 seconds.

CHECK:

(a) Turn ignition switch to ACC or ON, and wait at least for 20 seconds.
(b) Clear DTC stored in memory.
(See step 5 on page DI–456)
(c) Turn ignition switch to LOCK, and wait at least for 20 seconds.
(d) Turn ignition switch to ACC or ON, and wait at least for 20 seconds.
(e) Check DTC.
(See page DI–456)

OK:

DTC B0132/61 is not output.

HINT:
Codes other than code B0132/61 may be output at this time, but they are not relevant to this check.

NG → **Replace seat belt pretensioner (RH).**

OK

From the results of the above inspection, the malfunctioning part can now be considered normal. To make sure of this, use the simulation method to check. If the malfunctioning part can not be detected by the simulation method, replace all SRS components including the wire harness.

DI55G–01

DTC	B0133/62	Short in P/T Squib (RH) Circuit (to B+)

CIRCUIT DESCRIPTION

The P/T squib (RH) circuit consists of the airbag sensor assembly and seat belt pretensioner (RH).
It causes the SRS to deploy when the SRS deployment conditions are satisfied.
For details of the function of each component, see OPERATION on page RS–2.
DTC B0133/62 is recorded when a B+ short is detected in the P/T squib (RH) circuit.

DTC No.	DTC Detecting Condition	Trouble Area
B0133/62	• Short circuit in seat belt pretensioner (RH) wire harness (to B+) • P/T squib (RH) malfunction • Airbag sensor assembly malfunction	• Seat belt pretensioner (RH) • Airbag sensor assembly • Wire harness

WIRING DIAGRAM

See page DI–501.

INSPECTION PROCEDURE

1	**Prepare for inspection. (See step 1 on page DI–543)**

2	**Check P/T squib (RH) circuit.**

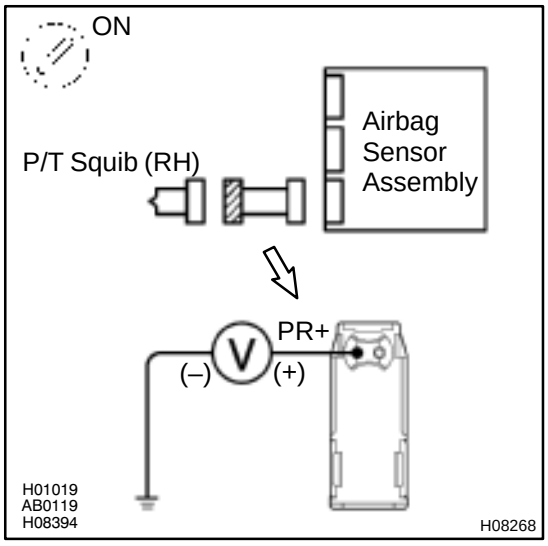

CHECK:

(a) Turn ignition switch to ON.

(b) For the connector (on the seat belt pretensioner side) between the seat belt pretensioner (RH) and the airbag sensor assembly, measure the voltage between PR+ and body ground.

OK:

Voltage: 0 V

NG → **Repair or replace harness or connector between seat belt pretensioner (RH) and airbag sensor assembly.**

OK

3	Check airbag sensor assembly.

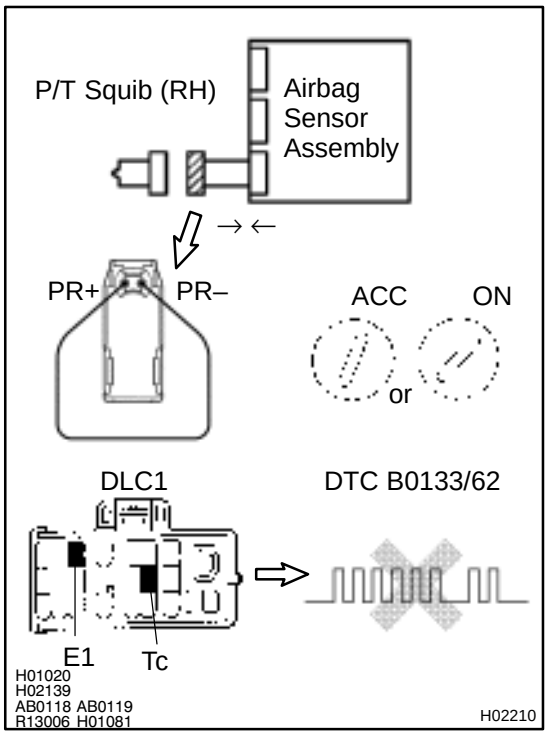

PREPARATION:

(a) Connect the connector to the airbag sensor assembly.

(b) Using a service wire, connect PR+ and PR– of the connector (on the seat belt pretensioner side) between the seat belt pretensioner (RH) and the airbag sensor assembly.

(c) Connect negative (–) terminal cable to the battery, and wait at least for 2 seconds.

CHECK:

(a) Turn ignition switch to ACC or ON and wait at least for 20 seconds.

(b) Clear DTC stored in memory.
(See step 5 on page DI–456)

(c) Turn ignition switch to LOCK, and wait at least for 20 seconds.

(d) Turn ignition switch to ACC or ON, and wait at least for 20 seconds.

(e) Check DTC.
(See page DI–456)

OK:

DTC B0133/62 is not output.

HINT:

Codes other than code B0133/62 may be output at this time, but they are not relevant to this check.

NG	Replace airbag sensor assembly.

OK

4	Check P/T squib (RH).

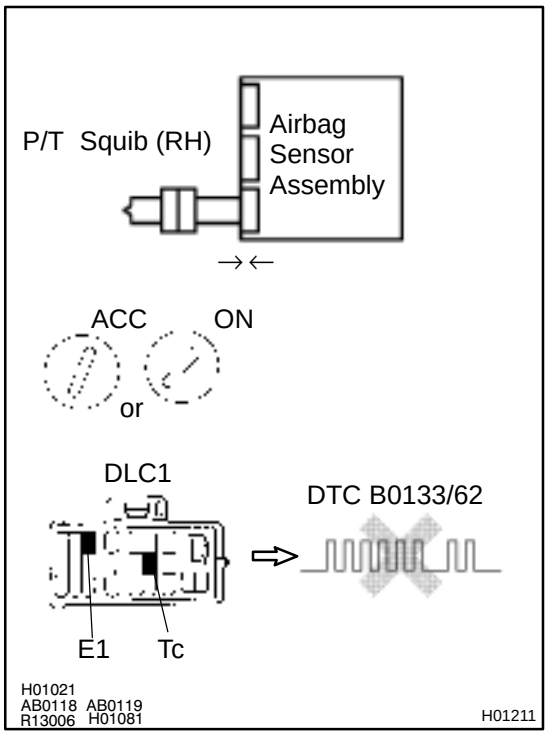

PREPARATION:

(a) Turn ignition switch to LOCK.
(b) Disconnect negative (–) terminal cable from the battery, and wait at least for 90 seconds.
(c) Connect the seat belt pretensioner (RH) connector.
(d) Connect negative (–) terminal cable to the battery, and wait at least for 2 seconds.

CHECK:

(a) Turn ignition switch to ACC or ON, and wait at least for 20 seconds.
(b) Clear DTC stored in memory.
(See step 5 on page DI–456)
(c) Turn ignition switch to LOCK, and wait at least for 20 seconds.
(d) Turn ignition switch to ACC or ON, and wait at least for 20 seconds.
(e) Check DTC.
(See page DI–456)

OK:

DTC B0133/62 is not output.

HINT:
Codes other than code B0133/62 may be output at this time, but they are not relevant to this check.

NG → **Replace seat belt pretensioner (RH).**

OK →

From the results of the above inspection, the malfunctioning part can now be considered normal. To make sure of this, use the simulation method to check. If the malfunctioning part can not be detected by the simulation method, replace all SRS components including the wire harness.

DI55H–01

DTC	B0135/73	Short in P/T Squib (LH) Circuit

CIRCUIT DESCRIPTION

The P/T squib (LH) circuit consists of the airbag sensor assembly and seat belt pretensioner (LH).
It causes the SRS to deploy when the SRS deployment conditions are satisfied.
For details of the function of each component, see OPERATION on page RS–2.
DTC B0135/73 is recorded when a short is detected in the P/T squib (LH) circuit.

DTC No.	DTC Detecting Condition	Trouble Area
B0135/73	• Short circuit between PL+ wire harness and PL– wire harness of squib • P/T squib (LH) malfunction • Airbag sensor assembly malfunction	• Seat belt pretensioner (LH) • Airbag sensor assembly • Wire harness

WIRING DIAGRAM

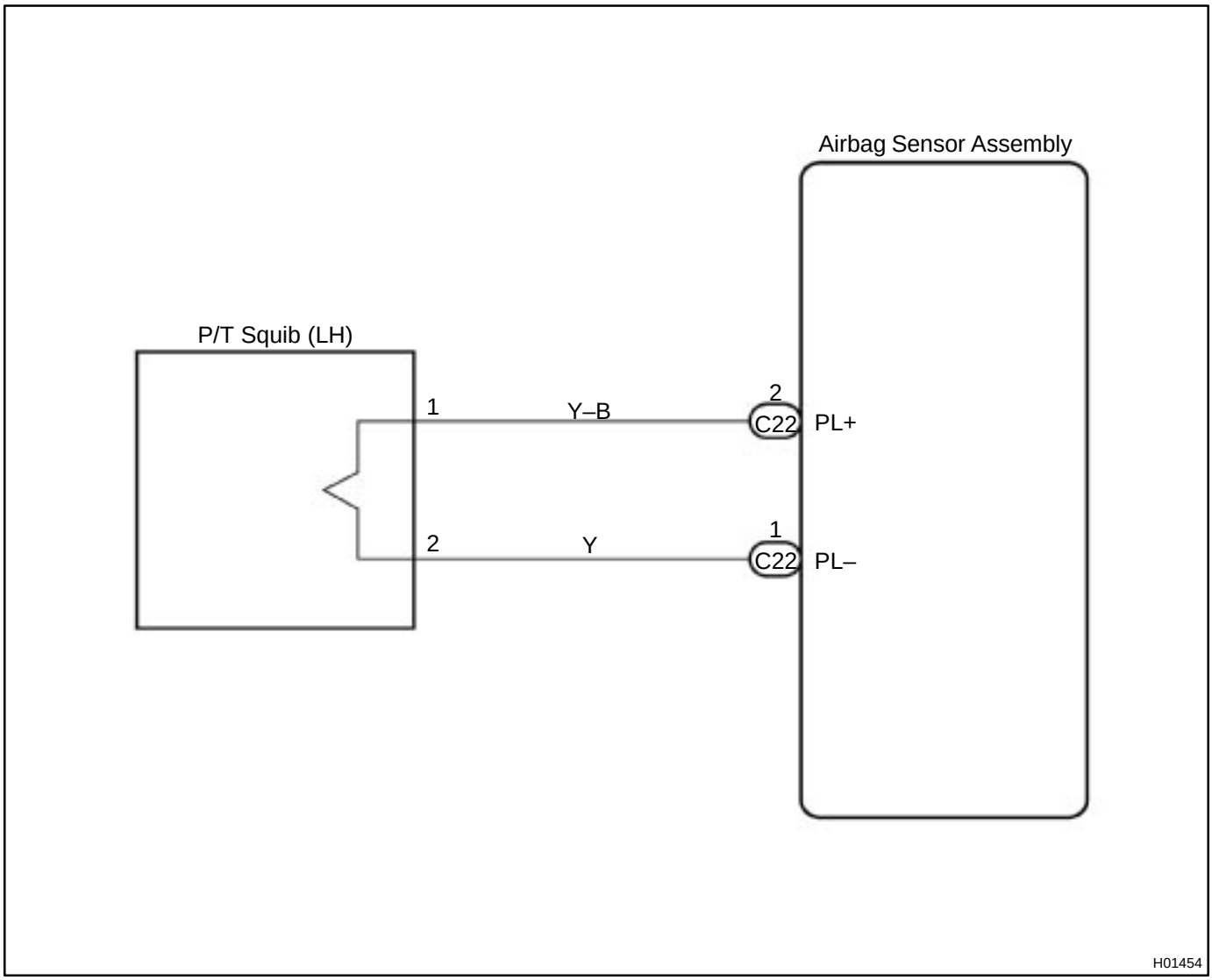

INSPECTION PROCEDURE

1	**Prepare for inspection. (See step 1 on page DI–543)**

2	**Check P/T squib (LH) circuit.**

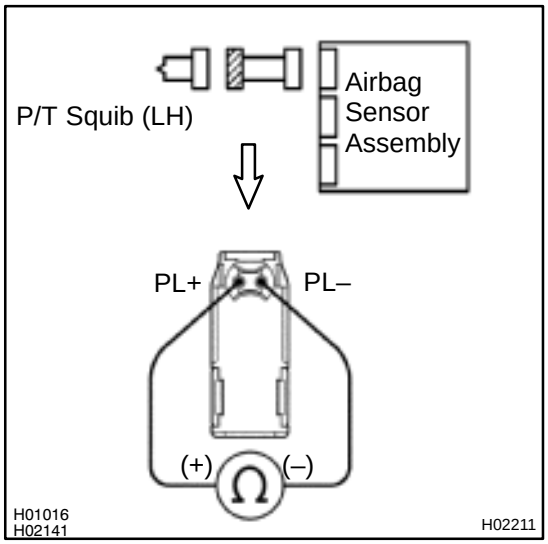

PREPARATION:

Release the airbag activation prevention mechanism of the connector (on the airbag sensor assembly side) between the airbag sensor assembly and the seat belt pretensioner (LH). (See page DI–456)

CHECK:

For the connector (on the seat belt pretensioner side) between the seat belt pretensioner (LH) and the airbag sensor assembly, measure the resistance between PL+ and PL–.

OK:

Resistance: 1 MΩ or Higher

NG → **Repair or replace harness or connector between seat belt pretensioner (LH) and airbag sensor assembly.**

OK

3	Check airbag sensor assembly.

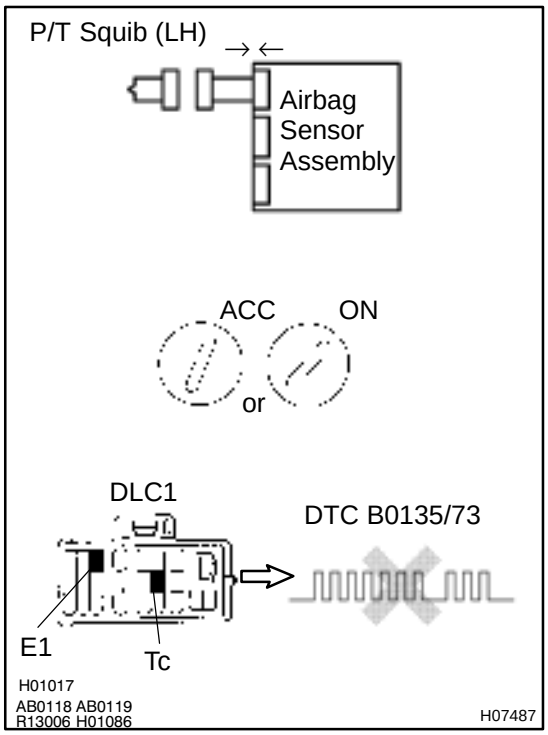

PREPARATION:

(a) Connect the connector to the airbag sensor assembly.
(b) Connect negative (–) terminal cable to the battery, and wait at least for 2 seconds.

CHECK:

(a) Turn ignition switch to ACC or ON and wait at least for 20 seconds.
(b) Clear DTC stored in memory.
(See page DI–456)
(c) Turn ignition switch to LOCK, and wait at least for 20 seconds.
(d) Turn ignition switch to ACC or ON, and wait at least for 20 seconds.
(e) Check DTC.
(See page DI–456)

OK:

DTC B0135/73 is not output.

HINT:

Codes other than code B0135/73 may be output at this time, but they are not relevant to this check.

NG → **Replace airbag sensor assembly.**

OK

4	Check P/T squib (LH).

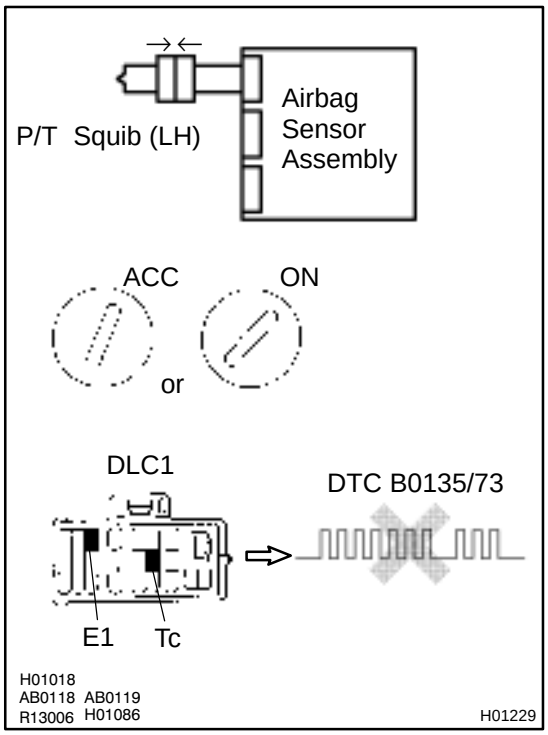

PREPARATION:

(a) Turn ignition switch to LOCK.
(b) Disconnect negative (–) terminal cable from the battery, and wait at least for 90 seconds.
(c) Connect the side airbag assembly (LH) connector.
(d) Connect negative (–) terminal cable to the battery, and wait at least for 2 seconds.

CHECK:

(a) Turn ignition switch to LOOK, and wait at least for 20 second.
(b) Turn ignition switch to ACC or ON, and wait at least for 20 seconds.
(c) Clear DTC stored in memory.
(See page DI–456)
(d) Turn ignition switch to LOCK, and wait at least for 20 seconds.
(e) Turn ignition switch to ACC or ON, and wait at least for 20 seconds.
(f) Check DTC.
(See page DI–456)

OK:

DTC B0135/73 is not output.

HINT:
Codes other than code B0135/73 may be output at this time, but they are not relevant to this check.

NG → **Replace seat belt pretensioner (LH).**

OK

From the results of the above inspection, the malfunctioning part can now be considered normal. To make sure of this, use the simulation method to check.

DI55I–01

DTC	B0136/74	Open in P/T Squib (LH) Circuit

CIRCUIT DESCRIPTION

The P/T squib circuit (LH) consists of the airbag sensor assembly and seat belt pretensioner (LH).
It causes the SRS to deploy when the SRS deployment conditions are satisfied.
For details of the function of each component, see OPERATION on page RS–2.
DTC B0136/74 is recorded when an open is detected in the P/T squib (LH) circuit.

DTC No.	DTC Detecting Condition	Trouble Area
B0136/74	• Open circuit in PL+ wire harness or PL– wire harness of squib • P/T squib (LH) malfunction • Airbag sensor assembly malfunction	• Seat belt pretensioner (LH) • Airbag sensor assembly • Wire harness

WIRING DIAGRAM

See page DI–514.

INSPECTION PROCEDURE

1	**Prepare for inspection. (See step 1 on page DI–543)**

2	**Check P/T squib (LH) circuit.**

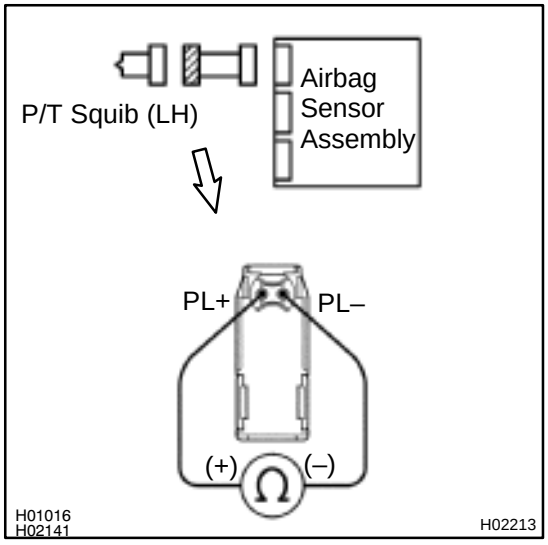

CHECK:

For the connector (on the seat belt pretensioner side) between the seat belt pretensioner (LH) and the airbag sensor assembly, measure the resistance between PL+ and PL–.

OK:

Resistance: Below 1 Ω

NG → **Repair or replace harness or connector between seat belt pretensioner (LH) and airbag sensor assembly.**

OK

3	**Check airbag sensor assembly.**

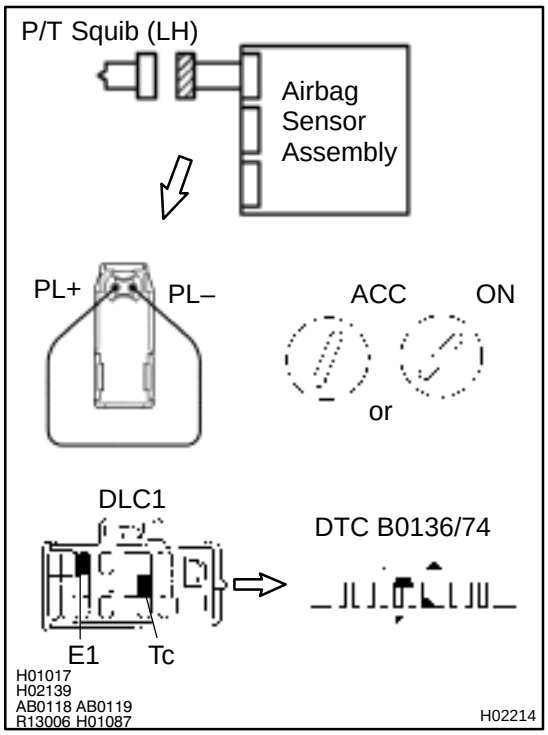

PREPARATION:

(a) Connect the connector to the airbag sensor assembly.
(b) Using a service wire, connect PL+ and PL– of the connector (on the seat belt pretensioner side) between the seat belt pretensioner (LH) and the airbag sensor assembly.
(c) Connect negative (–) terminal cable to the battery, and wait at least for 2 seconds.

CHECK:

(a) Turn ignition switch to ACC or ON and wait at least for 20 seconds.
(b) Clear DTC stored in memory.
(See page DI–456)
(c) Turn ignition switch to LOCK, and wait at least for 20 seconds.
(d) Turn ignition switch to ACC or ON, and wait at least for 20 seconds.
(e) Check DTC.
(See page DI–456)

OK:

DTC B0136/74 is not output.

HINT:
Codes other than code B0136/74 may be output at this time, but they are not relevant to this check.

NG → **Replace airbag sensor assembly.**

OK

4	Check P/T squib (LH).

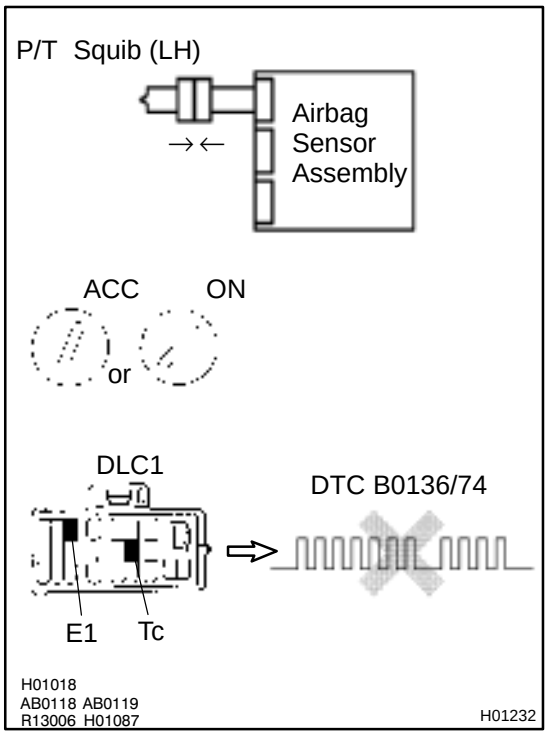

PREPARATION:

(a) Turn ignition switch to LOCK.
(b) Disconnect negative (–) terminal cable from the battery, and wait at least for 90 seconds.
(c) Connect the seat belt pretensioner (LH) connector.
(d) Connect negative (–) terminal cable to the battery, and wait at least for 2 seconds.

CHECK:

(a) Turn ignition switch to ACC or ON, and wait at least for 20 seconds.
(b) Clear DTC stored in memory.
(See page DI–456)
(c) Turn ignition switch to LOCK, and wait at least for 20 seconds.
(d) Turn ignition switch to ACC or ON, and wait at least for 20 seconds.
(e) Check DTC.
(See page DI–456)

OK:

DTC B0136/74 is not output.

HINT:
Codes other than code B0136/74 may be output at this time, but they are not relevant to this check.

NG → **Replace seat belt pretensioner (LH).**

OK

From the results of the above inspection, the malfunctioning part can now be considered normal. To make sure of this, use the simulation method to check.

DI55J–01

DTC	B0137/71	Short in P/T Squib (LH) Circuit (to Ground)

CIRCUIT DESCRIPTION

The P/T squib (LH) circuit consists of the airbag sensor assembly and seat belt pretensioner (LH).
It causes the SRS to deploy when the SRS deployment conditions are satisfied.
For details of the function of each component, see OPERATION on page RS–2.
DTC B0137/71 is recorded when a ground short is detected in the P/T squib (LH) circuit.

DTC No.	DTC Detecting Condition	Trouble Area
B0137/71	• Short circuit in P/T squib (LH) wire harness (to ground) • P/T squib (LH) malfunction • Airbag sensor assembly malfunction	• Seat belt pretensioner (LH) • Airbag sensor assembly • Wire harness

WIRING DIAGRAM

See page DI–514.

INSPECTION PROCEDURE

1	**Prepare for inspection. (See step 1 on page DI–543)**

2	**Check P/T squib (LH) circuit.**

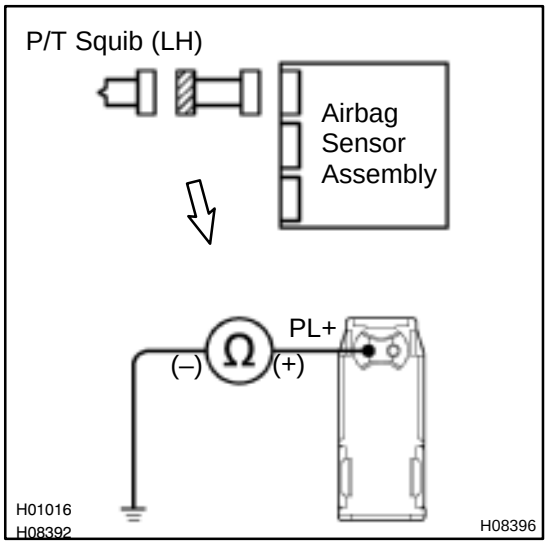

CHECK:

For the connector (on the seat belt pretensioner side) between the seat belt pretensioner (LH) and the airbag sensor assembly, measure the resistance between PL+ and body ground.

OK:

Resistance: 1 MΩ or Higher

NG → **Repair or replace harness or connector between seat belt pretensioner (LH) and airbag sensor assembly.**

OK

3	Check airbag sensor assembly.

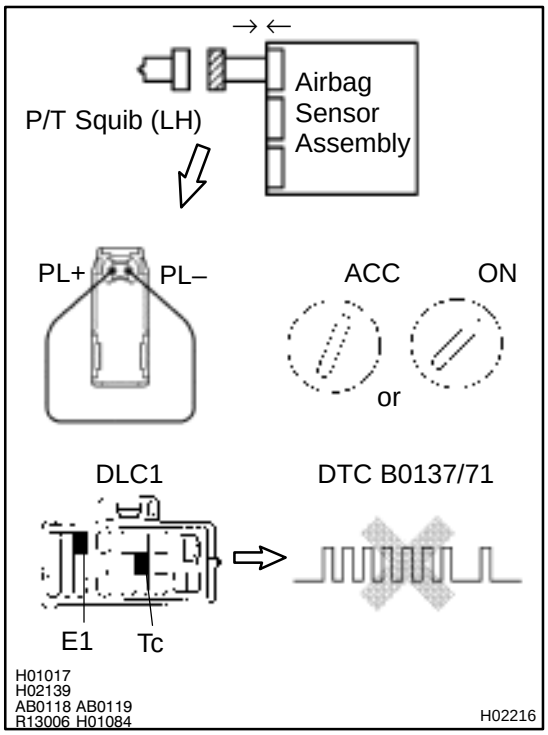

PREPARATION:

(a) Connect the connector to the airbag sensor assembly.

(b) Using a service wire, connect PL+ and PL– of the connector (on the seat belt pretensioner side) between the seat belt pretensioner (LH) and the airbag sensor assembly.

(c) Connect negative (–) terminal cable to the battery, and wait at least for 2 seconds.

CHECK:

(a) Turn ignition switch to ACC or ON and wait at least for 20 seconds.

(b) Clear DTC stored in memory.
(See step 5 on page DI–456)

(c) Turn ignition switch to LOCK, and wait at least for 20 seconds.

(d) Turn ignition switch to ACC or ON, and wait at least for 20 seconds.

(e) Check DTC.
(See page DI–456)

OK:

DTC B0137/71 is not output.

HINT:

Codes other than code B0137/71 may be output at this time, but they are not relevant to this check.

NG	Replace airbag sensor assembly.

OK

4	Check P/T squib (LH).

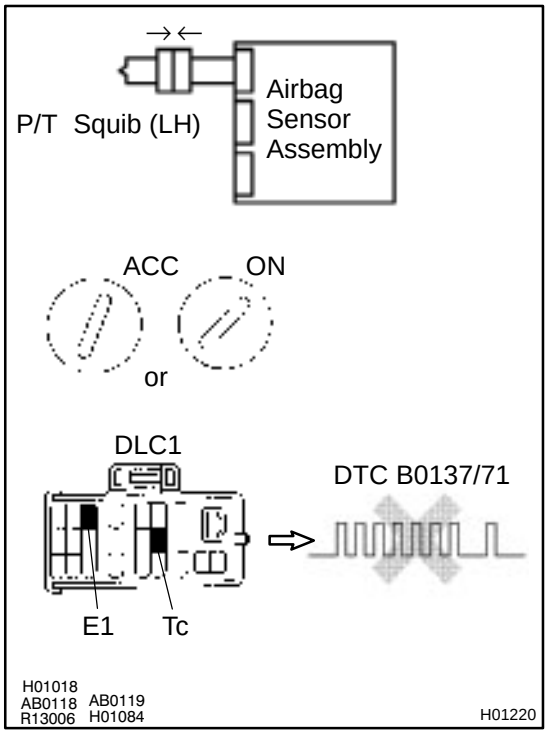

PREPARATION:

(a) Turn ignition switch to LOCK.
(b) Disconnect negative (–) terminal cable from the battery, and wait at least for 90 seconds.
(c) Connect the seat belt pretensioner (LH) connector.
(d) Connect negative (–) terminal cable to the battery, and wait at least for 2 seconds.

CHECK:

(a) Turn ignition switch to ACC or ON, and wait at least for 20 seconds.
(b) Clear DTC stored in memory.
(See step 5 on page DI–456)
(c) Turn ignition switch to LOCK, and wait at least for 20 seconds.
(d) Turn ignition switch to ACC or ON, and wait at least for 20 seconds.
(e) Check DTC.
(See page DI–456)

OK:

DTC B0137/71 is not output.

HINT:
Codes other than code B0137/71 may be output at this time, but they are not relevant to this check.

NG → **Replace seat belt pretensioner (LH).**

OK

From the results of the above inspection, the malfunctioning part can now be considered normal. To make sure of this, use the simulation method to check. If the malfunctioning part can not be detected by the simulation method, replace all SRS components including the wire harness.

DI55K–01

DTC	B0138/72	Short in P/T Squib (LH) Circuit (to B+)

CIRCUIT DESCRIPTION

The P/T squib (LH) circuit consists of the airbag sensor assembly and seat belt pretensioner (LH).
It causes the SRS to deploy when the SRS deployment conditions are satisfied.
For details of the function of each component, see OPERATION on page RS–2.
DTC B0138/72 is recorded when a B+ short is detected in the P/T squib (LH) circuit.

DTC No.	DTC Detecting Condition	Trouble Area
B0138/72	• Short circuit in seat belt pretensioner (LH) wire harness (to B+) • P/T squib (LH) malfunction • Airbag sensor assembly malfunction	• Seat belt pretensioner (LH) • Airbag sensor assembly • Wire harness

WIRING DIAGRAM

See page DI–514.

INSPECTION PROCEDURE

1	**Prepare for inspection. (See step 1 on page DI–543)**

2	**Check P/T squib (LH) circuit.**

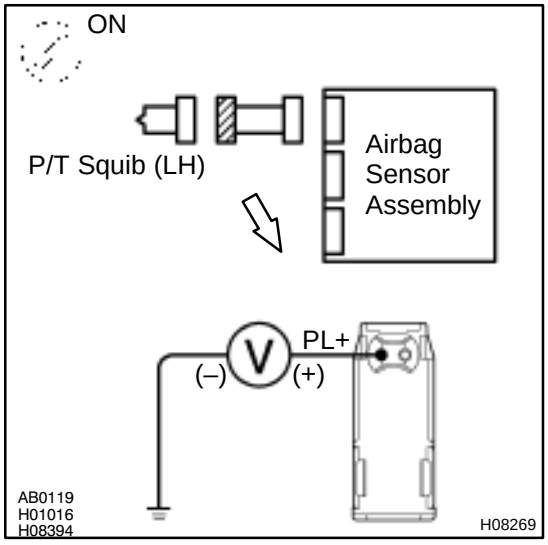

CHECK:

(a) Turn ignition switch to ON.

(b) For the connector (on the seat belt pretensioner side) between the seat belt pretensioner (LH) and the airbag sensor assembly, measure the voltage between PL+ and body ground.

OK:

Voltage: 0 V

NG → **Repair or replace harness or connector between seat belt pretensioner (LH) and airbag sensor assembly.**

OK

3	Check airbag sensor assembly.

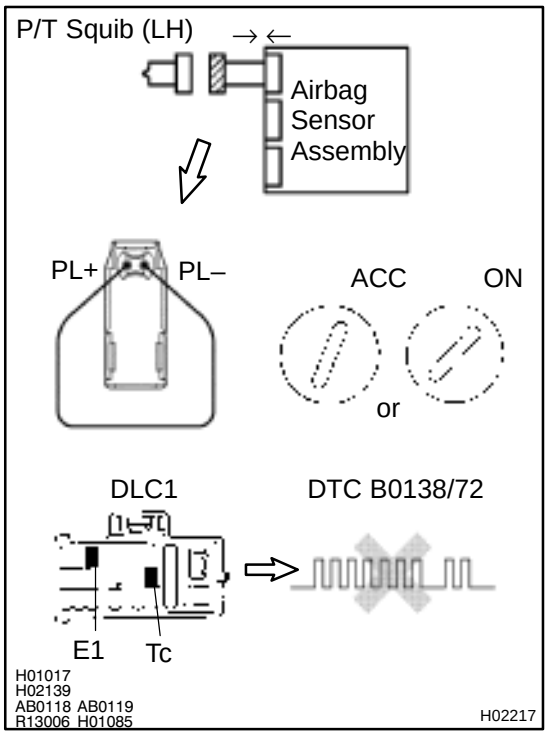

PREPARATION:

(a) Connect the connector to the airbag sensor assembly.

(b) Using a service wire, connect PL+ and PL– of the connector (on the seat belt pretensioner side) between the seat belt pretensioner (LH) and the airbag sensor assembly.

(c) Connect negative (–) terminal cable to the battery, and wait at least for 2 seconds.

CHECK:

(a) Turn ignition switch to ACC or ON and wait at least for 20 seconds.

(b) Clear DTC stored in memory.
(See step 5 on page DI–456)

(c) Turn ignition switch to LOCK, and wait at least for 20 seconds.

(d) Turn ignition switch to ACC or ON, and wait at least for 20 seconds.

(e) Check DTC.
(See page DI–456)

OK:

DTC B0138/72 is not output.

HINT:

Codes other than code B0138/72 may be output at this time, but they are not relevant to this check.

NG → **Replace airbag sensor assembly.**

OK

4	Check P/T squib (LH).

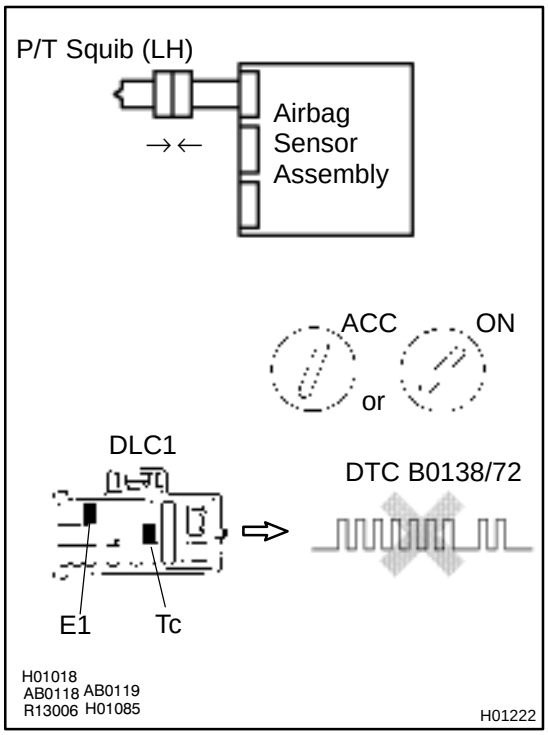

PREPARATION:

(a) Turn ignition switch to LOCK.
(b) Disconnect negative (–) terminal cable from the battery, and wait at least for 90 seconds.
(c) Connect the seat belt pretensioner (LH) connector.
(d) Connect negative (–) terminal cable to the battery, and wait at least for 2 seconds.

CHECK:

(a) Turn ignition switch to ACC or ON, and wait at least for 20 seconds.
(b) Clear DTC stored in memory.
(See step 5 on page DI–456)
(c) Turn ignition switch to LOCK, and wait at least for 20 seconds.
(d) Turn ignition switch to ACC or ON, and wait at least for 20 seconds.
(e) Check DTC.
(See page DI–456)

OK:

DTC B0138/72 is not output.

HINT:
Codes other than code B0138/72 may be output at this time, but they are not relevant to this check.

NG → **Replace seat belt pretensioner (LH).**

OK →

From the results of the above inspection, the malfunctioning part can now be considered normal. To make sure of this, use the simulation method to check. If the malfunctioning part can not be detected by the simulation method, replace all SRS components including the wire harness.

DI191–20

SRS Warning Light Circuit Malfunction (Does not light up, when ignition switch is turned to ACC or ON.)

CIRCUIT DESCRIPTION

The SRS warning light is located on the combination meter.
When the SRS is normal, the SRS warning light lights up for approx. 6 seconds after the ignition switch is turned from LOCK position to ACC or ON position, and then turns OFF automatically.
If there is a malfunction in the SRS, the SRS warning light lights up to inform the driver of the abnormality.
When terminals Tc and E1 of the DLC1 are connected, the DTC is displayed by blinking the SRS warning light.

WIRING DIAGRAM

See page DI–546.

INSPECTION PROCEDURE

1	**Check ECU–B Fuse.**

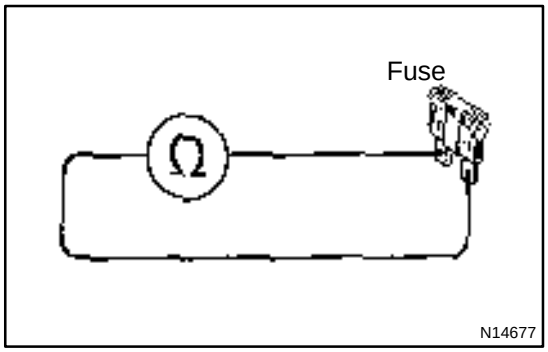

PREPARATION:
Remove ECU–B fuse.
CHECK:
Check continuity of ECU–B fuse.
OK:

Continuity

HINT:

- Fuse may be burnt out even if it appears to be OK during visual inspection.
- If fuse is OK, install it.

NG → **Go to step 5.**

OK

2	**Prepare for inspection. (See step 1 on page DI–543)**

3	Check SRS warning light circuit.

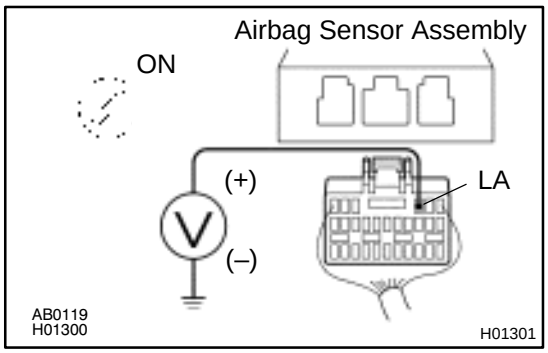

PREPARATION:

(a) Connect negative (–) terminal cable to the battery.

(b) Turn ignition switch to ACC or ON.

CHECK:

Measure the voltage between LA terminal of the harness side connector and body ground.

OK:

Voltage: 10 – 14 V

NG → **Check SRS warning light bulb or repair SRS warning light circuit.**

OK

4	Does SRS warning light come on?

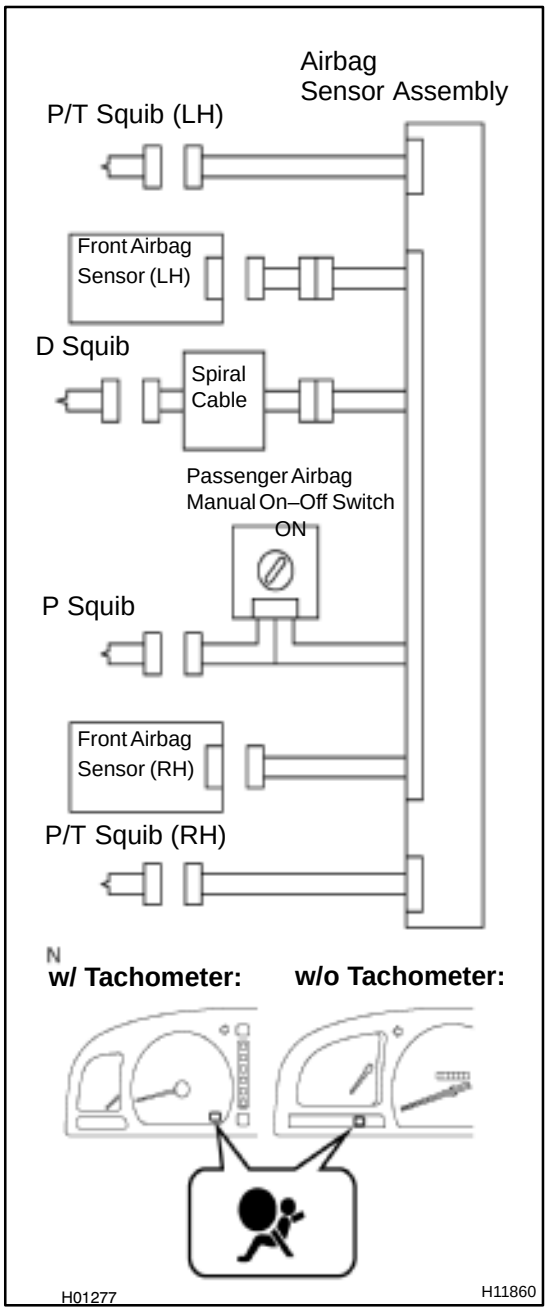

PREPARATION:

(a) Disconnect negative (–) terminal cable from the battery.
(b) Connect the airbag sensor assembly connector.
(c) Connect negative (–) terminal cable to the battery, and wait at least for 2 seconds.
(d) Turn ignition switch to ACC or ON.

CHECK:

Check operation of SRS warning light.

NO → **Check terminal LA of airbag sensor assembly. If normal, replace airbag sensor assembly.**

YES

From the results of the above inspection, the malfunctioning part can now be considered normal. To make sure of this, use simulation method to check.

5	**Is new SRS fuse burnt out again?**

NO → **Using simulation method, reproduce malfunction symptoms. (See page IN–18)**

YES

Check harness between SRS fuse and SRS warning light.

DI18Z–23

DTC	Normal	Source Voltage Drop

CIRCUIT DESCRIPTION

The SRS is equipped with a voltage–increase circuit (DC–DC converter) in the airbag sensor assembly in case the source voltage drops.
When the battery voltage drops, the voltage–increase circuit (DC–DC converter) functions to increase the voltage of the SRS to normal voltage.
The diagnosis system malfunction display for this circuit is different from other circuits that is when the SRS warning light remains lit up and the DTC is a normal code, source voltage drop is indicated.
Malfunction in this circuit is not recorded in the airbag sensor assembly, and the source voltage returns to normal, the SRS warning light automatically goes off.

DTC No.	Diagnosis
(Normal)	Source voltage drop

WIRING DIAGRAM

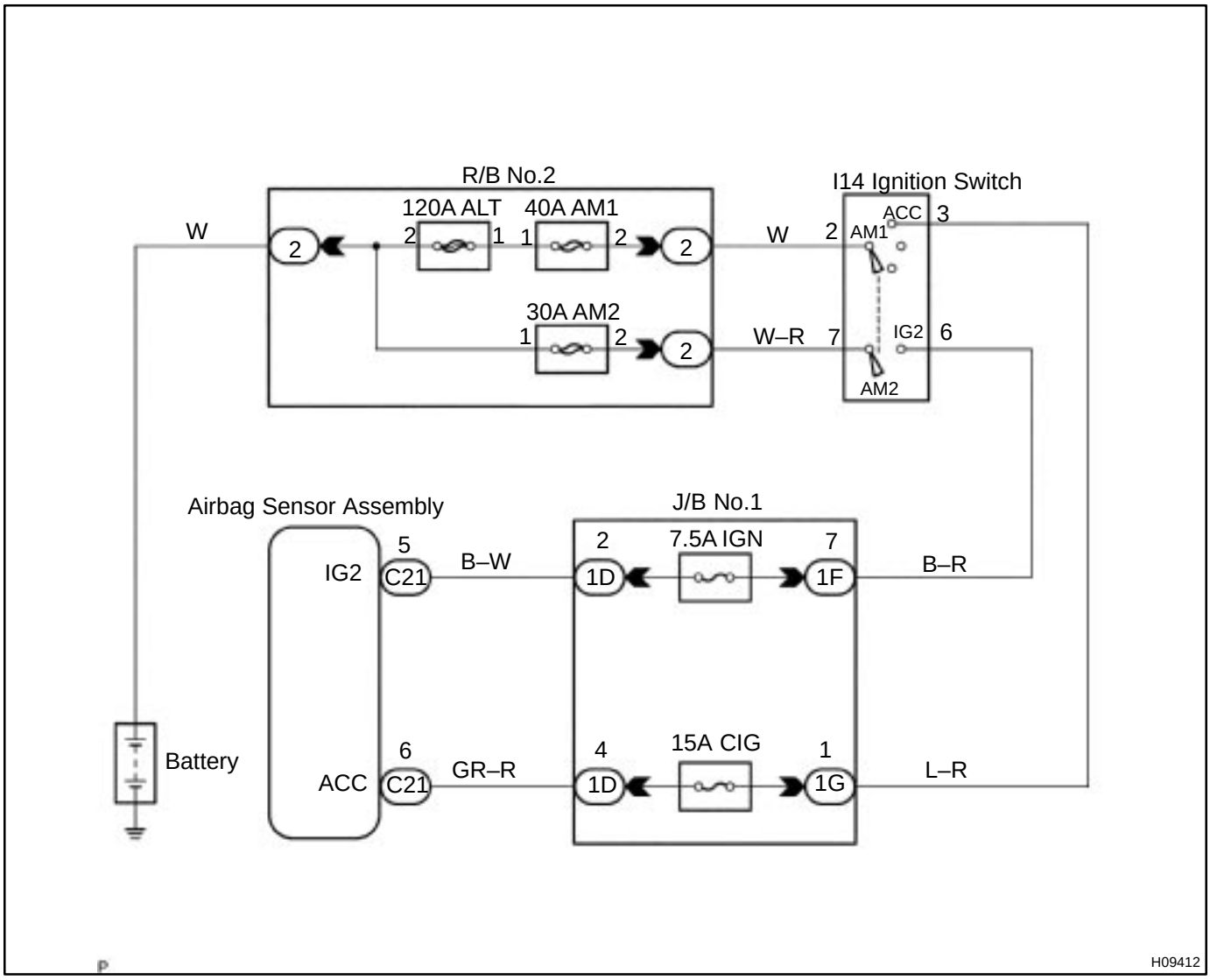

INSPECTION PROCEDURE

1	**Prepair for inspection.**

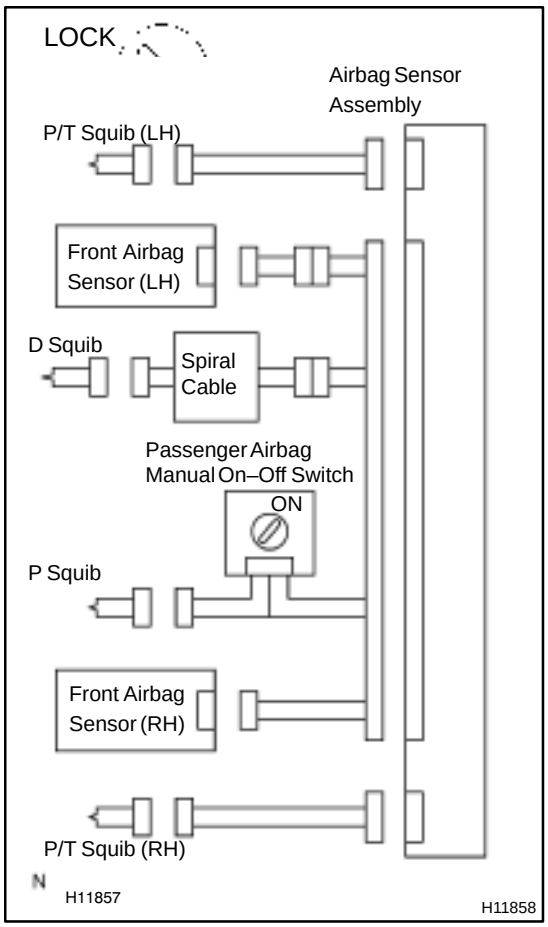

PREPARATION:

(a) Disconnect negative (–) terminal cable from the battery, and wait at least for 90 seconds.

(b) Remove the steering wheel pad. (See page SR–13)

(c) Disconnect the connector of the front passenger airbag assembly. (See page RS–26)

(d) Disconnect the connector of the airbag sensor assembly. (See page RS–39)

(e) Disconnect the connector of the seat belt pretensioner RH and LH. (See page BO–98)

(f) Disconnect the connector of the front airbag sensor RH and LH. (See page RS–44)

CAUTION:

Store the steering wheel pad with the front surface facing upward.

2	Check source voltage.

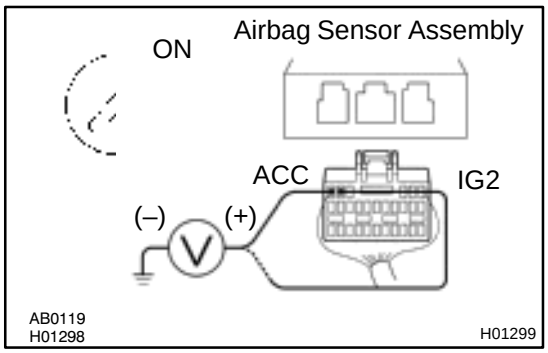

PREPARATION:

(a) Connect negative (–) terminal cable to the battery.
(b) Turn ignition switch ON.

CHECK:

Operating the electric system (defogger, wiper, headlight, heater, blower, etc.), measure the voltage between each of IG2 and ACC of the sensor and body ground.

OK:

Voltage: 10 – 14 V

NG → **Check harness between battery and airbag sensor assembly, and check battery and charging system.**

OK

3	Does SRS warning light turn OFF?

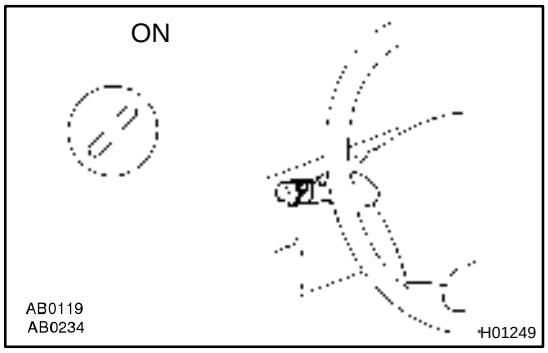

PREPARATION:

(a) Turn ignition switch to LOCK.
(b) Connect the steering wheel pad connector.
(c) Connect the front passenger airbag assembly connector.
(d) Connect the airbag sensor assembly connector.
(e) Connect the seat belt pretensioner connector.
(f) Connect the front airbag sensor connector.
(g) Turn ignition switch ON.

CHECK:

Operate electric system (defogger, wiper, headlight, heater blower, etc.) and check that SRS warning light goes off.

NO → **Check for DTCs. If a DTC is output, perform troubleshooting for the DTC. If a normal code is output, replace airbag sensor assembly.**

YES

From the results of the above inspection, the malfunctioning part can now be considered normal. To make sure of this, use the simulation method to check.

Tc Terminal Circuit

CIRCUIT DESCRIPTION

By connecting terminals Tc and E1 of the DLC1 the airbag sensor assembly is set in the DTC output mode. The DTCs are displayed by blinking the SRS warning light.

WIRING DIAGRAM

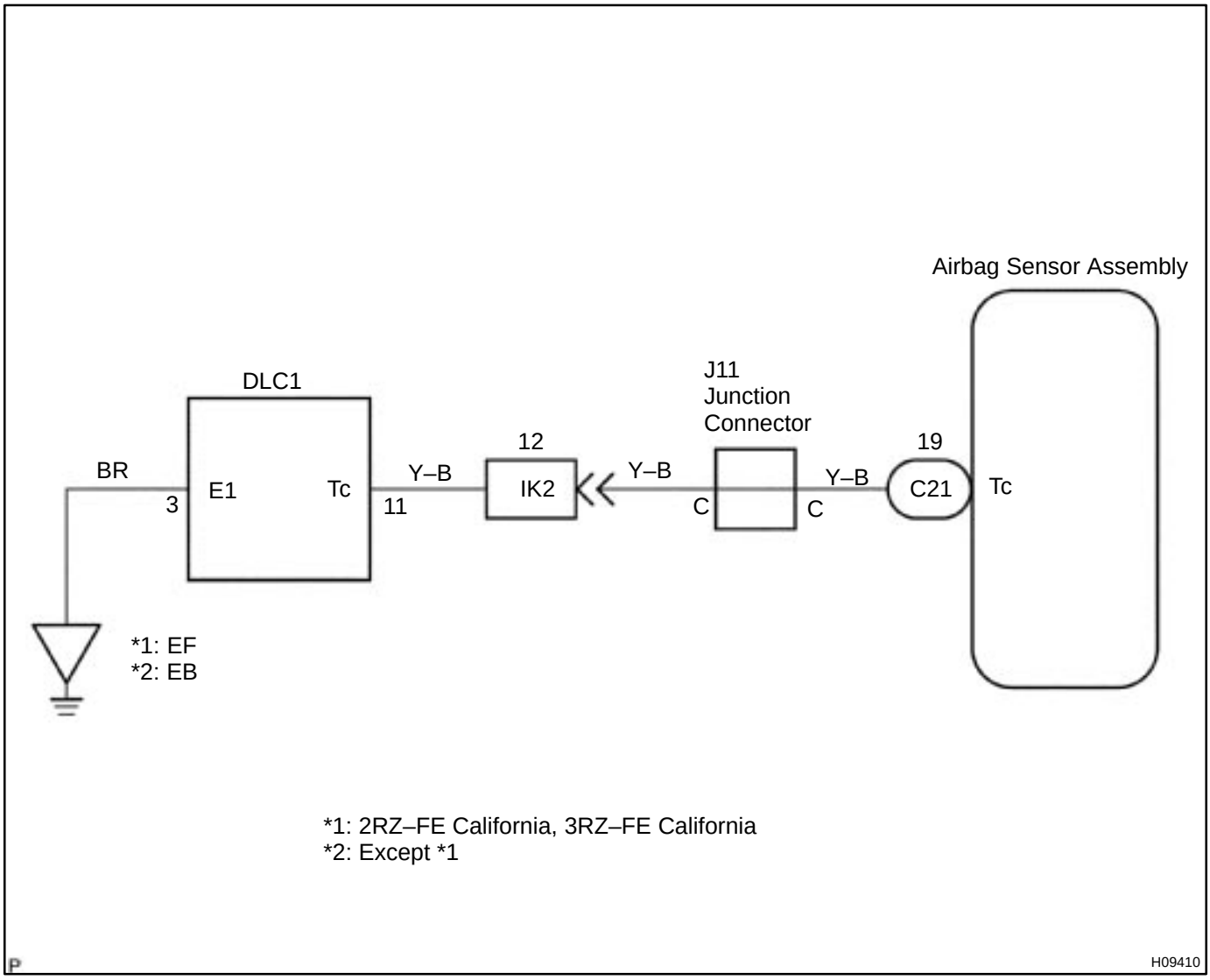

INSPECTION PROCEDURE

If the DTC is not displayed, do the following troubleshooting.

1	**Does SRS warning light light up for approx. 6 seconds?**

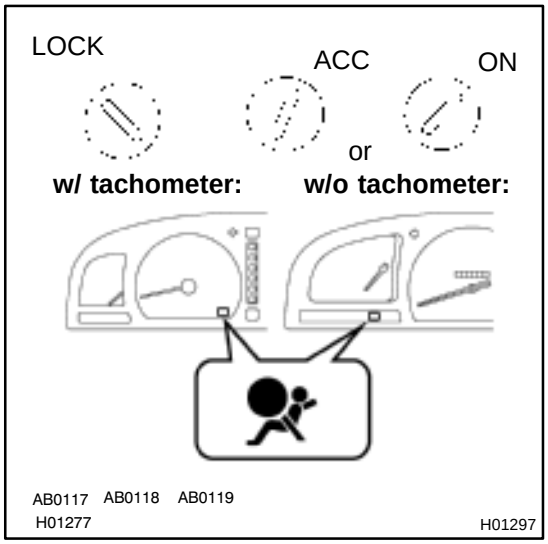

PREPARATION:

Check operation of the SRS warning light after ignition switch is turned from LOCK position to ACC or ON position.

NO → **Check SRS warning light system. (See page DI–456)**

YES

2	**Check voltage between terminals Tc and E1 of DLC1.**

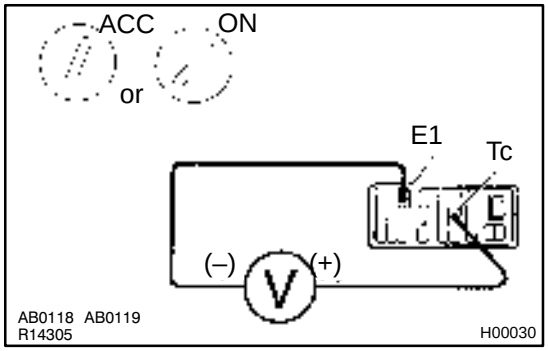

PREPARATION:

Turn ignition switch to ACC or ON.

CHECK:

Measure the voltage between terminals Tc and E1 of DLC1.

OK:

Voltage: 10 – 14 V

OK → **Go to step 4.**

NG

3	Check voltage between terminal Tc of DLC1 and body ground.

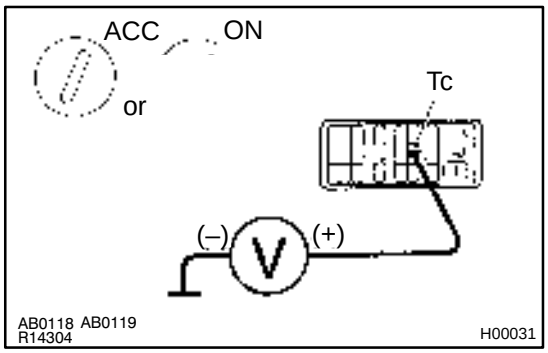

CHECK:

Measure the voltage between terminal Tc of DLC1 and body ground.

OK:

Voltage: 10 – 14 V

OK → **Check harness between terminal E1 of DLC1 and body ground.**

NG

4	Check airbag sensor assembly.

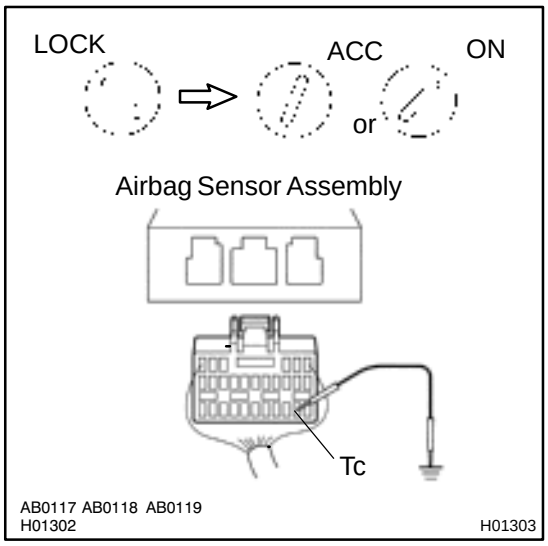

PREPARATION:

(a) Turn ignition switch to LOCK.
(b) Disconnect negative (–) terminal cable from the battery, and wait at least for 90 seconds.
(c) Disconnect the airbag sensor assembly connector.
(d) Insert service wire into terminal Tc from back side as shown in the illustration.
(e) Connect the airbag sensor assembly connector with service wire.
(f) Connect negative (–) terminal cable to the battery.
(g) Turn ignition switch to ACC or ON and wait at least for 20 seconds.
(h) Connect service wire of terminal Tc to body ground.

CHECK:

Check operation of SRS warning light.

OK:

SRS waning light comes on.

NOTICE:

Pay due attention to the terminal connecting position to above a malfunction.

OK → **Check harness between the airbag sensor assembly and DLC1.**

NG

Replace airbag sensor assembly.

If the DTC is displayed without a DTC check procedure, perform the following troubleshooting.

1	**Check resistance between terminal Tc of airbag sensor assembly and body ground.**

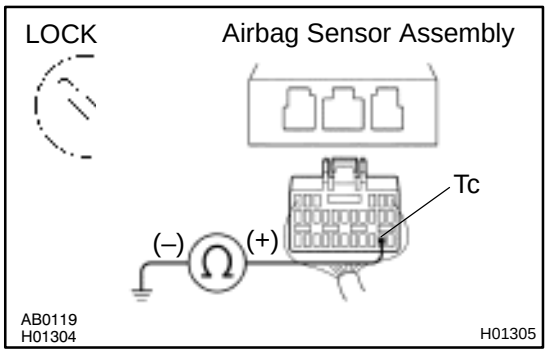

PREPARATION:

(a) Turn ignition switch to LOCK.
(b) Disconnect negative (–) terminal cable from the battery, and wait at least for 90 seconds.
(c) Disconnect the airbag sensor assembly connector.

CHECK:

Check the resistance between terminal Tc of the airbag sensor assembly connector and body ground.

OK:

Resistance: 1 MΩ or Higher

NG → **Repair or replace harness or connector.**

OK

Replace airbag sensor assembly.

DI18K–05

CUSTOMER PROBLEM ANALYSIS CHECK

Supplemental Restraint System Check Sheet

Inspector's Name _____

Customer's Name		**Registration No.**	
		Registration Year	/ /
		Frame No.	
Date Vehicle Brought In	/ /	**Odometer Reading**	**km Miles**

Date Problem Occurred	/ /
Weather	☐ Fine ☐ Cloudy ☐ Rainy ☐ Snowy ☐ Other
Temperature	**Approx.**

Vehicle Operation	☐ Starting ☐ Idling ☐ Driving [☐ Constant speed ☐ Acceleration ☐ Deceleration ☐ Other]
Road Conditions	
Details Of Problem	

Vehicle Inspection, Repair History Prior to Occurrence of Malfunction (Including Supplemental Restraint System)	

Diagnosis System Inspection

SRS Warning Light Inspection	**1st Time**	☐ Remains ON ☐ Sometimes Lights Up ☐ Does Not Light Up
	2nd Time	☐ Remains ON ☐ Sometimes Lights Up ☐ Does Not Light Up
DTC Inspection	**1st Time**	☐ Normal Code ☐ Malfunction Code [Code.]
	2nd Time	☐ Normal Code ☐ Malfunction Code [Code.]

DI18M–03

DIAGNOSTIC TROUBLE CODE CHART

If a malfunction code is displayed during the DTC check, check the circuit listed for that code in the table below (Proceed to the page given for that circuit.).

DTC No. (See Page)	Detection Item	Trouble Area	SRS Warning Light
B0100/13 (DI–467)	• Short in D squib circuit	• Steering wheel pad (squib) • Spiral cable • Airbag sensor assembly • Wire harness	ON
B0101/14 (DI–472)	• Open in D squib circuit	• Steering wheel pad (squib) • Spiral cable • Airbag sensor assembly • Wire harness	ON
B0102/11 (DI–476)	• Short in D squib circuit (to Ground)	• Steering wheel pad (Squib) • Spiral cable • Airbag sensor assembly • Wire harness	ON
B0103/12 (DI–480)	• Short in D squib circuit (to B+)	• Steering wheel pad (Squib) • Spiral cable • Airbag sensor assembly • Wire harness	ON
B0105/53 (DI–484)	• Short in P squib circuit	• Front passenger airbag assembly (squib) • Passenger airbag manual on–off switch • Airbag sensor assembly • Wire harness	ON
B0106/54 (DI–489)	• Open in P squib circuit	• Front passenger airbag assembly (squib) • Passenger airbag manual on–off switch • Airbag sensor assembly • Wire harness	ON
B0107/51 (DI–493)	• Short in P squib circuit (to Ground)	• Front passenger airbag assembly (squib) • Passenger airbag manual on–off switch • Airbag sensor assembly • Wire harness	ON
B0108/52 (DI–497)	• Short in P squib circuit (to B+)	• Front passenger airbag assembly (squib) • Passenger airbag manual on–off switch • Airbag sensor assembly • Wire harness	ON
B0130/63 (DI–501)	• Short in P/T squib (RH) circuit	• Seat belt pretensioner RH (squib) • Airbag sinsor assembly • Wire harness	Blink
B0131/64 (DI–505)	• Open in P/T squib (RH) circuit	• Seat belt pretensioner RH (squib) • Airbag sensor assembly • Wire harness	Blink
B0132/61 (DI–508)	• Short in P/T squib (RH) circuit (to Ground)	• Seat belt pretensioner RH (squib) • Airbag sensor assembly • Wire harness	Blink
B0133/62 (DI–511)	• Short in P/T squib (RH) circuit (to B+)	• Seat belt pretensioner RH (squib) • Airbag sensor assembly • Wire harness	Blink
B0135/73 (DI–514)	• Short in P/T squib (LH) circuit	• Seat belt pretensioner LH (squib) • Airbag sensor assembly • Wire harness	Blink

DTC No. (See Page)	Detection Item	Trouble Area	SRS Warning Light
B0136/74 (DI–518)	• Open in P/T squib (LH) circuit	• Seat belt pretensioner LH (squib) • Airbag sensor assembly • Wire harness	Blink
B0137/71 (DI–521)	• Short in P/T squib (LH) circuit (to Ground)	• Seat belt pretensioner LH (squib) • Airbag sensor assembly • Wire harness	Blink
B0138/72 (DI–524)	• Short in P/T squib (LH) circuit (to B+)	• Seat belt pretensioner LH (squib) • Airbag sensor assembly • Wire harness	Blink
B1100/31 (DI–527)	• Airbag sensor assembly malfunction	• Airbag sensor assembly	ON
B1156/B1157/15 (DI–529)	• Front airbag sensor assembly (RH) malfunction	• Front airbag sensor assembly (RH) • Airbag sensor assembly • Wire harness	ON
B1158/B1159/16 (DI–535)	• Front airbag sensor assembly (LH) malfunction	• Front airbag sensor assembly (LH) • Airbag sensor assembly • Wire harness • Cowl wire harness	ON
Normal (DI–543)	• System normal	–	OFF
	• Voltage source drop	• Battery • Airbag sensor assembly	ON

HINT:

- When the SRS warning light remains lit up and the DTC is the normal code, this means a voltage source drops.
  This malfunction is not stored in memory by the airbag sensor assembly and if the power source voltage returns to normal, the SRS warning light will automatically go out.
- When 2 or more codes are indicated, the codes will be displayed in numeral order starting from the lowest numbered code.
- If a code not listed on the chart is displayed, the airbag sensor assembly is faulty.

SUPPLEMENTAL RESTRAINT SYSTEM

HOW TO PROCEED WITH TROUBLESHOOTING

DI18J–19

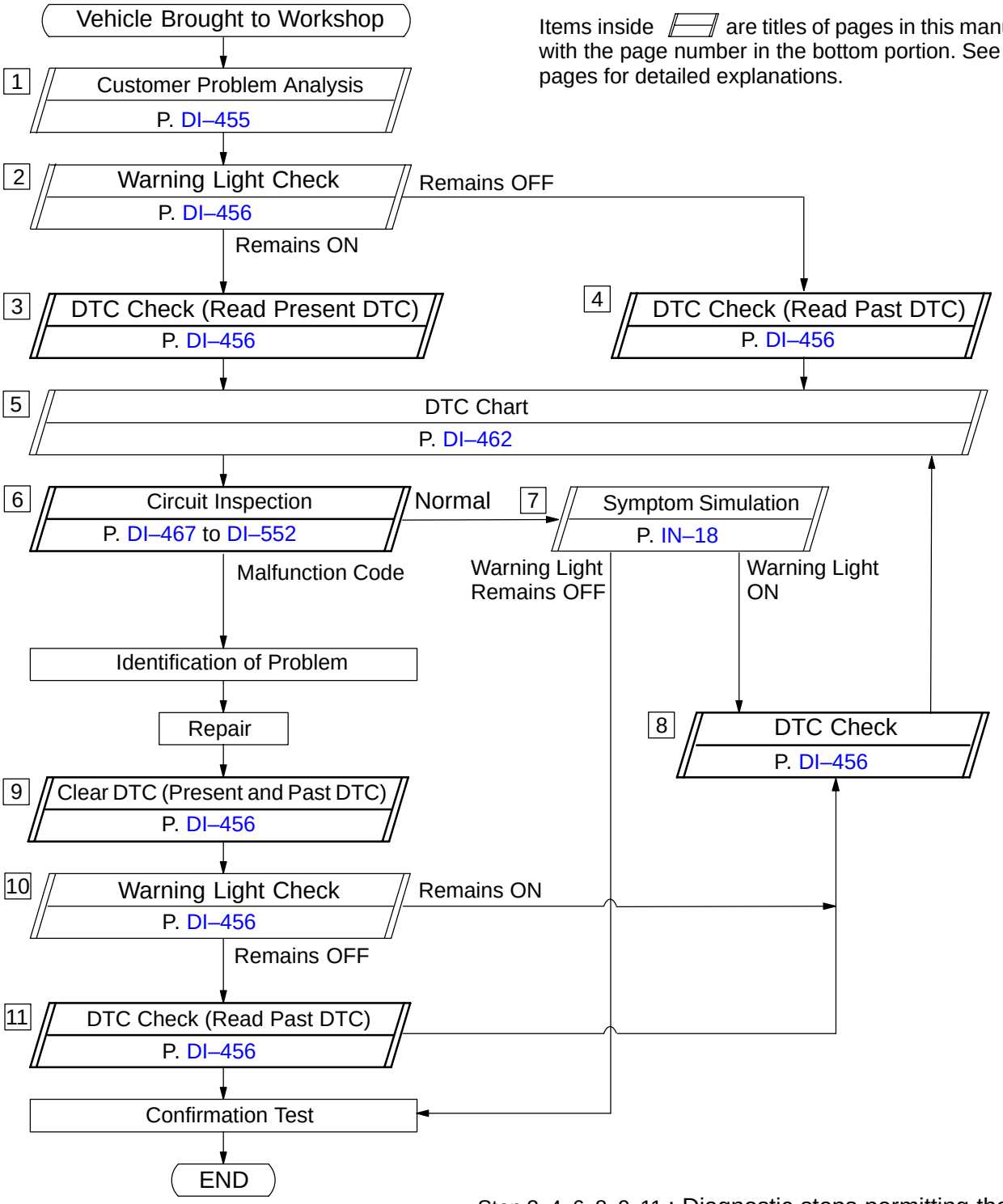

Step 3, 4, 6, 8, 9, 11 : Diagnostic steps permitting the use of the hand–held tester.

DI18N–03

PARTS LOCATION

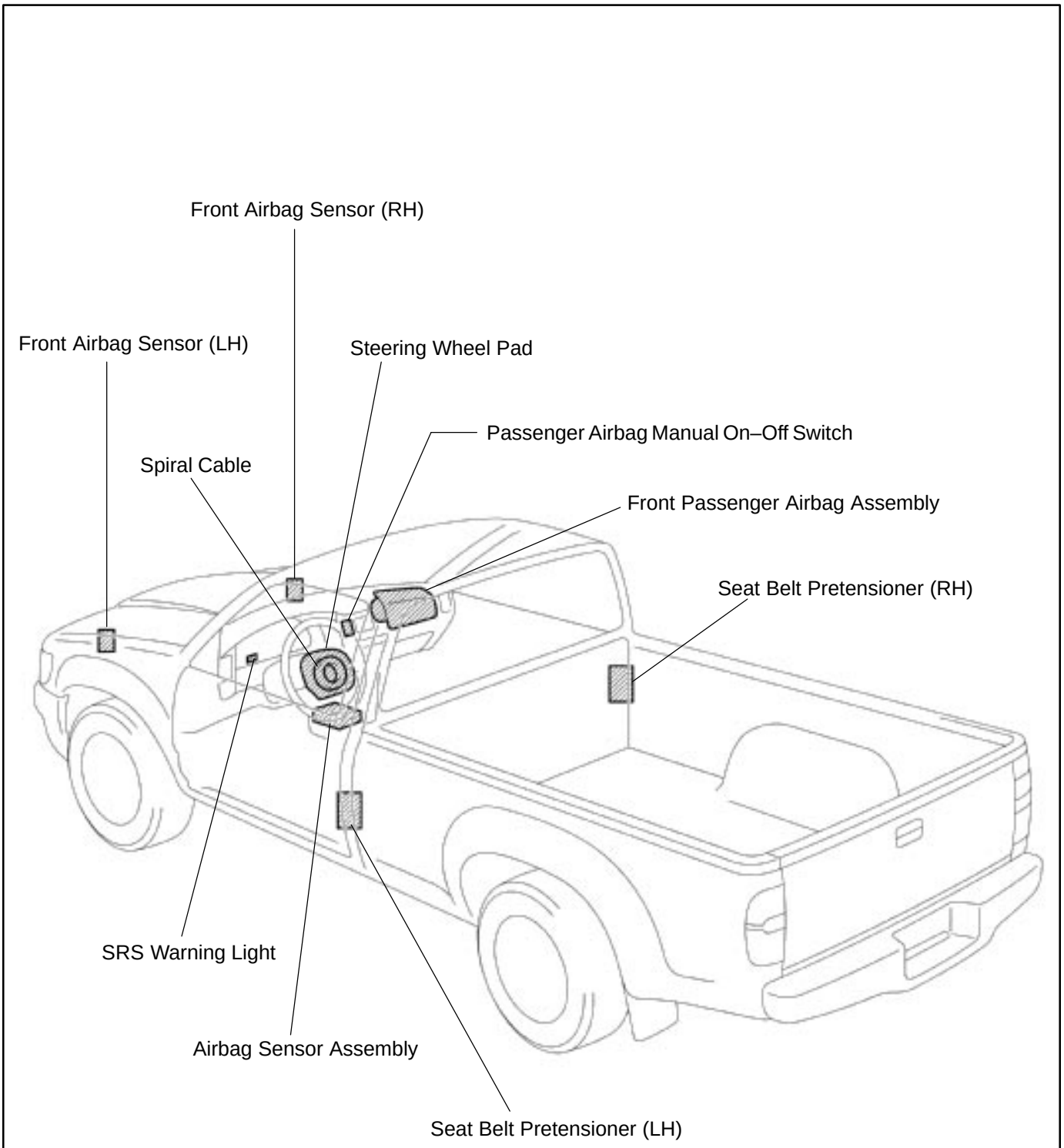

H08880

DI69P–01

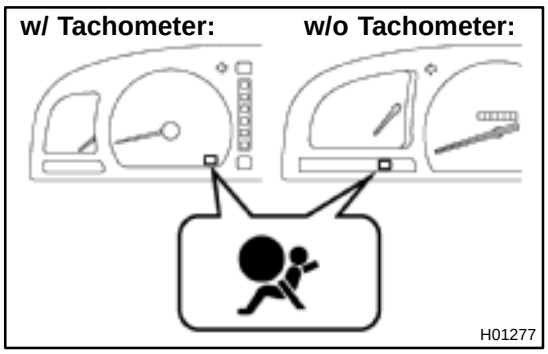

PRE–CHECK

1. SRS WARNING LIGHT CHECK

(a) Turn the ignition switch to the ACC or ON position and check that the SRS warning light lights up.

(b) Check that the SRS warning light goes out after approx. 6 seconds.

HINT:

- When the ignition switch is at ACC or ON and the SRS warning light remains on or flashes, the airbag sensor assembly has detected a malfunction code.
- If, after approx. 6 seconds have elapsed, the SRS warning light sometimes lights up or the SRS warning light lights up even when the ignition switch is OFF, a short in the SRS warning light circuit can be considered likely. Proceed to "SRS warning light circuit malfunction" on page DI–546 and DI–548.

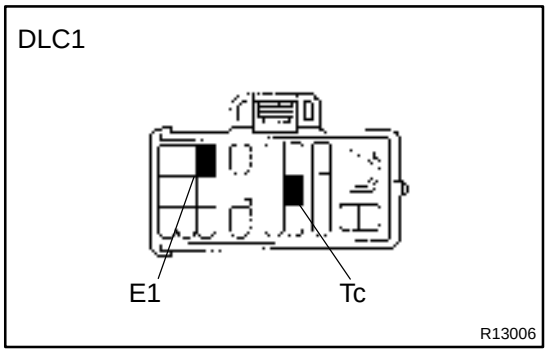

2. DTC CHECK (Using diagnosis check wire)

(a) Present troubles codes:

Output the DTC.

(1) Turn the ignition switch to the ACC or ON position and wait for approx. 20 seconds.

(2) Using SST, connect terminals Tc and E1 of the DLC1.

SST 09843–18020

NOTICE:

Pay due attention to the terminal connecting position to avoid a malfunction.

(b) Past troubles codes:

Output the DTC.

(1) Using service wire, connect terminals Tc and E1 of the DLC1.

SST 09843–18020

(2) Turn the ignition switch to the ACC or ON position and wait for approx. 20 seconds.

NOTICE:

Pay due attention to the terminal connecting position to avoid a malfunction.

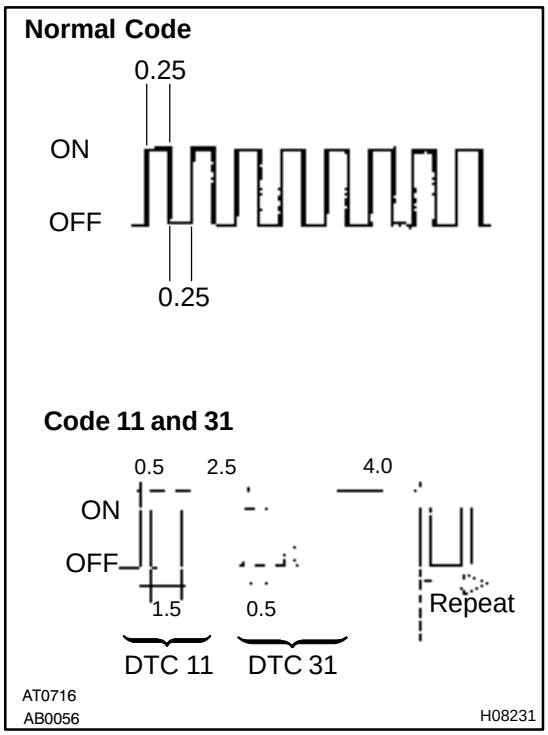

(c) Read the DTC.
Read the 2–digit DTC as indicated by the number of times the SRS warning light blinks. As an example, the blinking patterns, normal, 11 and 31 are shown in the illustration.

- Normal code indication
  The light will blink 2 times per second.
- Malfunction code indication
  The first blinking output indicates the first digit of a 2–digit DTC. After a 1.5–second pause, the second blinking output will indicate the second digit.

If there are 2 or more codes, there will be a 2.5–second pause between each code. After all the codes have been output, there will be a 4.0–second pause and they will all be repeated.
HINT:

- In the event of a number of trouble codes, indication will start from the smallest numbered code.
- If a DTC is not output or a DTC is output without terminal connection, proceed to the Tc terminal circuit inspection on page DI–552.

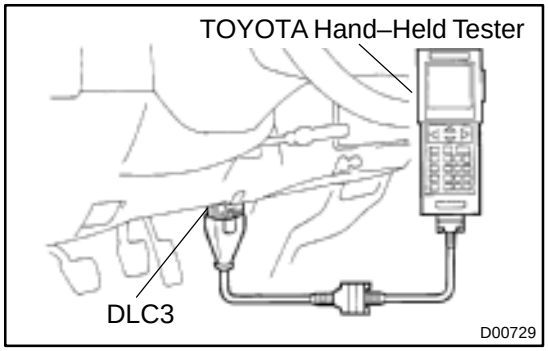

3. DTC CHECK (Using hand–held tester)

(a) Hook up the hand–held tester to the DLC3.
(b) Read the DTCs by following the prompts on the tester screen.

HINT:
Please refer to the hand–held tester operator's manual for further details.

4. DTC CLEARANCE (Not using service wire)

When the ignition switch is turned off, the diagnostic trouble code is cleared.
HINT:
DTC might not be cleared by turning the ignition switch OFF. In this case, proceed to the next step.

5. DTC CLEARANCE (Using service wire)

(a) Connect the 2 service wires to terminals Tc and AB of check connector.
(b) Turn the ignition switch to ACC or ON and wait for approx. 6 seconds.

(c) Starting with the Tc terminal, ground alternately terminal Tc and terminal AB twice each in cycles of 1.0 second. Make sure that the terminals are grounded. Ensure the terminal Tc remain grounded.

HINT:

When alternately grounding terminals Tc and AB, release ground from one terminal and immediately ground the other terminal within an interval of 0.2 seconds.

If DTCs are not cleared, repeat the above procedure until the codes are cleared.

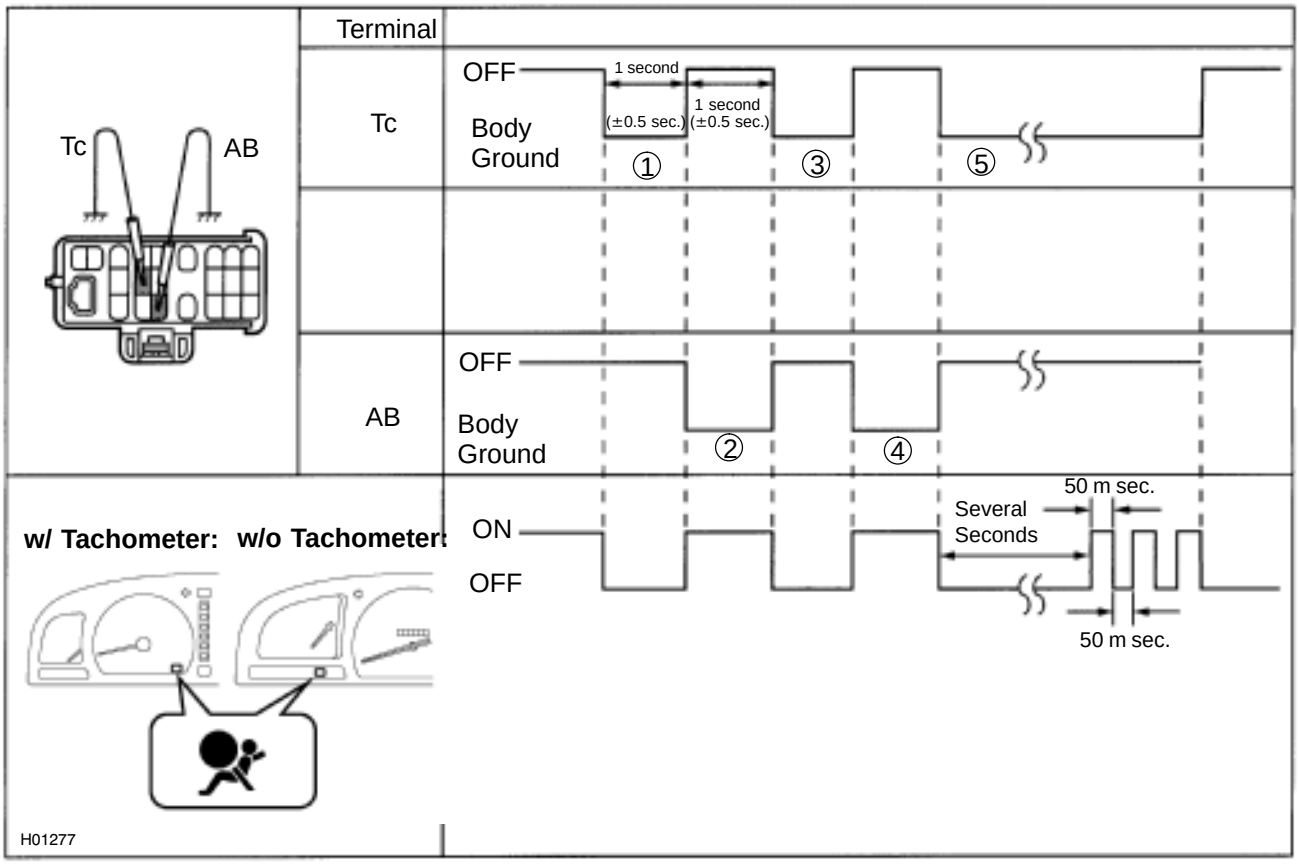

H01461

H01858

(d) Several seconds after doing the clearing procedure, the SRS warning light will blink in a 50 – m sec. cycle to indicate the codes which have been cleared.

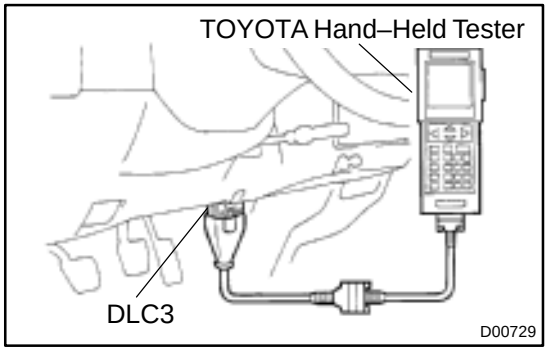

6. DTC CLEARANCE (Using hand–held tester)

(a) Hook up the hand–held tester to the DLC3.

(b) Clear the DTCs by following the prompts on the tester screen.

HINT:

Please refer to the hand–held tester operation's manual for further details.

7. RELEASE METHOD OF AIRBAG ACTIVATION PREVENTION MECHANISM

An airbag activation prevention mechanism is built into the connector for the squib circuit of the SRS.

When release of the airbag activation prevention mechanism is directed in the troubleshooting procedure, as shown in the illustration of the connectors on the next pages, insert paper which has the same thickness as the male terminal between the terminal and the short spring.

CAUTION:

Never release the airbag activation prevention mechanism on the squib connector.

NOTICE:

- **Do not release the airbag activation prevention mechanism unless specifically directed by the troubleshooting procedure.**
- **If the inserted paper is too thick the terminal and short spring may be damaged, so always use paper with the same thickness as the male terminal.**

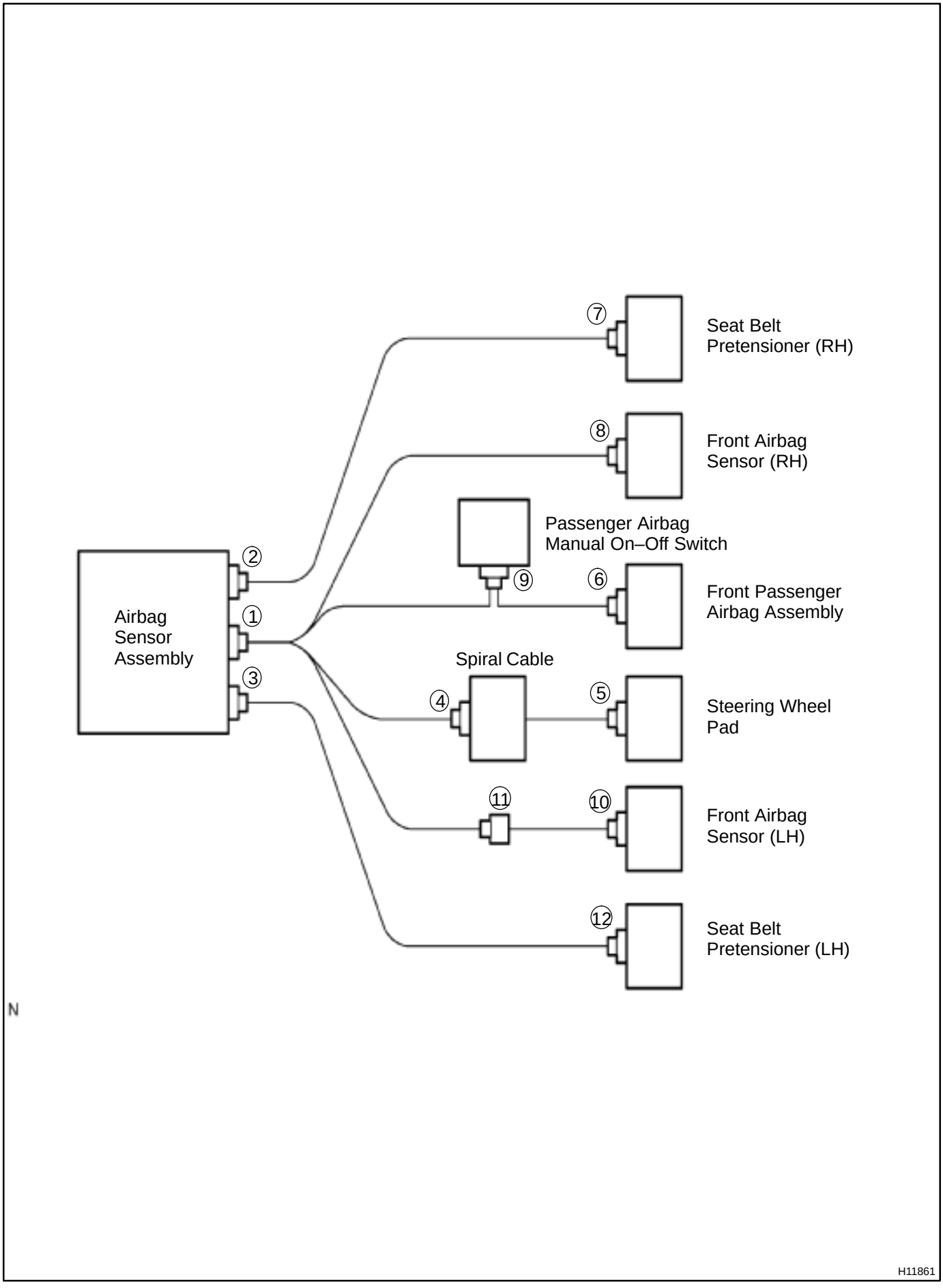
⑦
Seat Belt
Pretensioner (RH)
⑧
Front Airbag
Sensor (RH)
Passenger Airbag
Manual On–Off Switch
⑨
⑥
Front Passenger
Airbag Assembly
②
①
③
Airbag
Sensor
Assembly
Spiral Cable
④
⑤
Steering Wheel
Pad
⑪
⑩
Front Airbag
Sensor (LH)
⑫
Seat Belt
Pretensioner (LH)
N
H11861

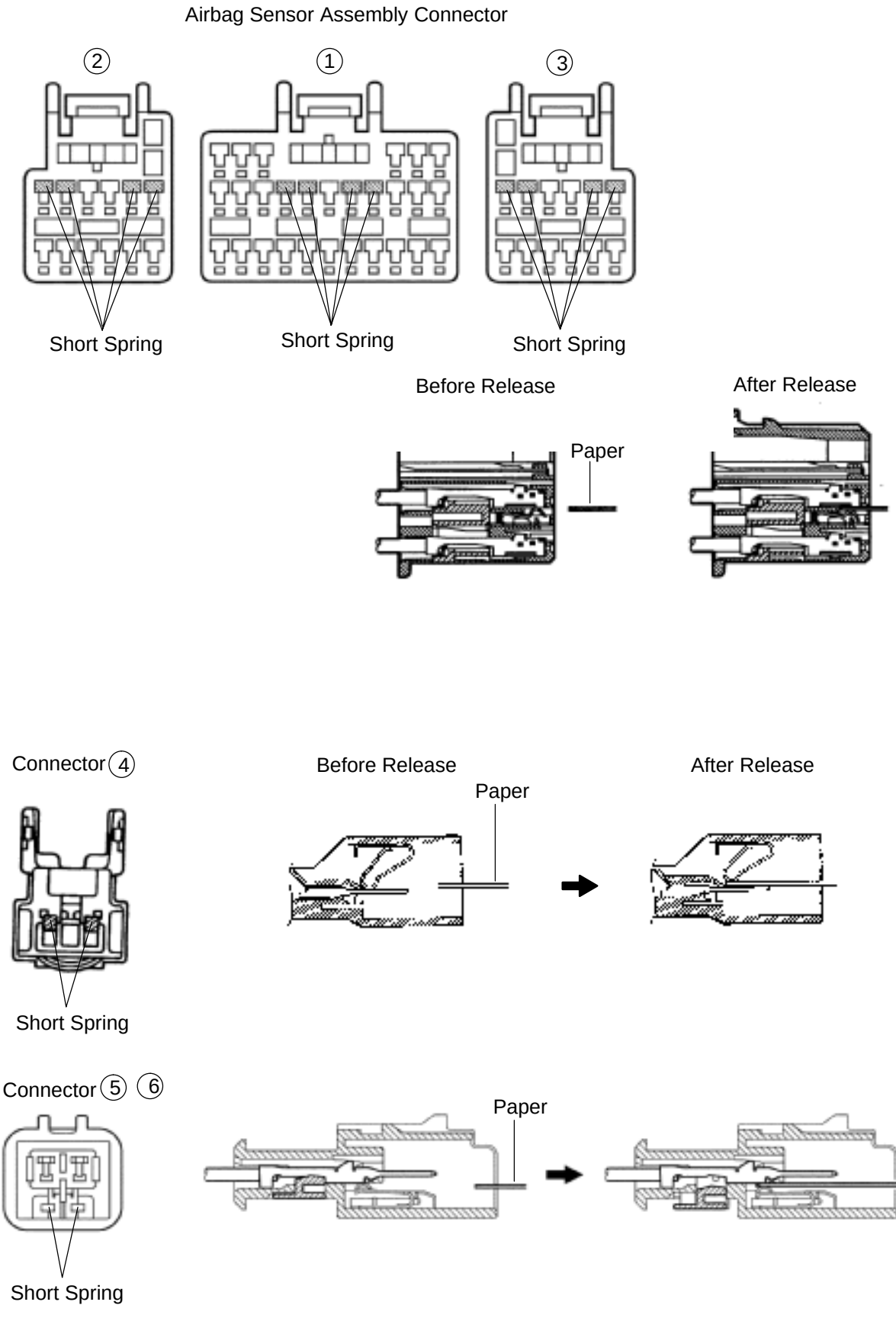

H01356 H01233
AB0130 AB0045 AB0046
H02248 H02249

H11843

DI18P–07

PROBLEM SYMPTOMS TABLE

Proceed with troubleshooting of each circuit in the table below.

Symptom	Suspect Area	See page
• With the ignition switch at ACC or ON, the SRS warning light sometimes lights up after approx. 6 seconds have elapsed. • SRS warning light is always lit up even when ignition switch is in the LOCK position.	• SRS warning light circuit (Always lights up when ignition switch is in LOCK position.)	DI–546
• With the ignition switch at ACC or ON, the SRS warning light does not light up.	• SRS warning light circuit (Does not light up when ignition switch is turned to ACC or ON.)	DI–548
• DTC is not displayed. • SRS warning light is always lit up in a DTC check procedure. • DTC is displayed without Tc and E1 terminal connection.	• Tc terminal circuit	DI–552

DI18O–03

TERMINALS OF ECU

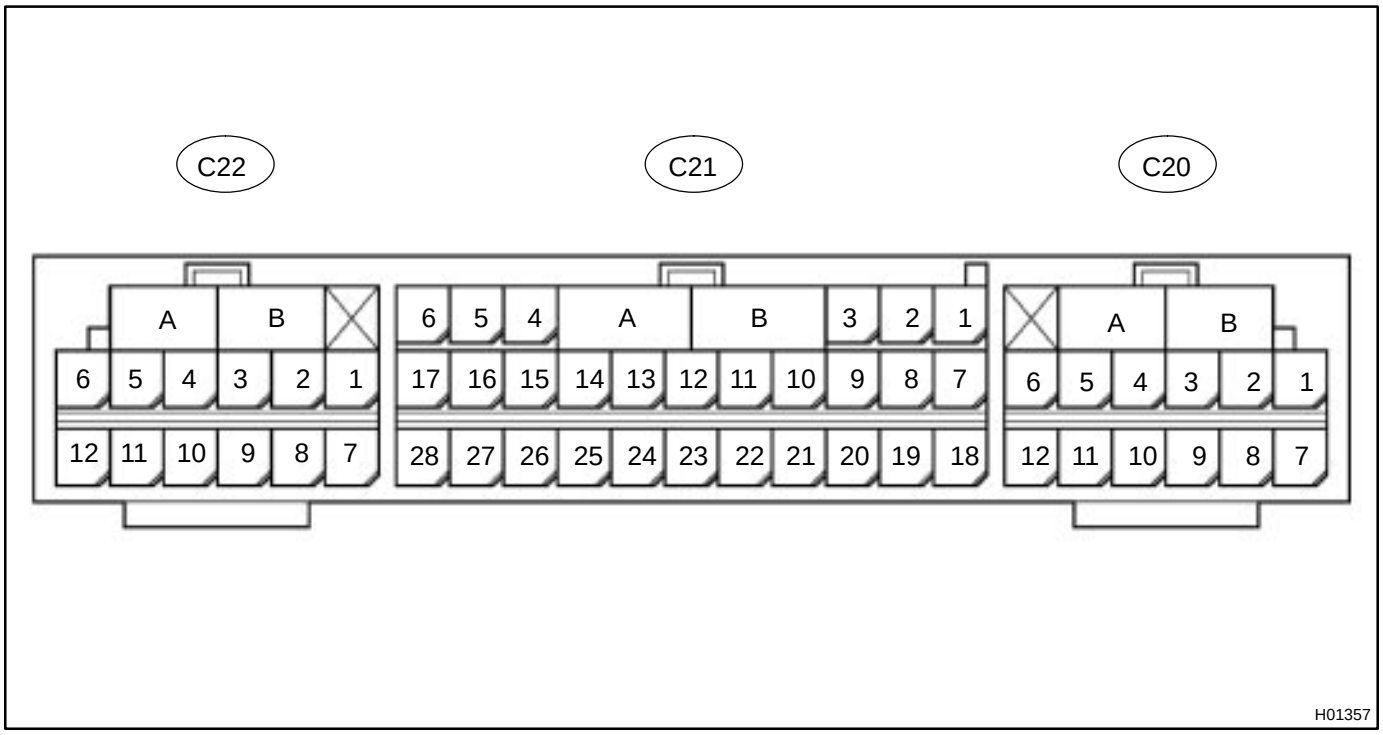

No.	Symbol	Terminal Name
A	–	Electrical Connector Check Mechanism
B	–	Electrical Connector Check Mechanism
C20 – 6	PR+	Squib (Seat belt pretensioner, RH)
C20 – 7	PR–	Squib (Seat belt pretensioner, RH)
C21 – 3	LA	SRS Warning Light
C21 – 5	IG2	Power Source (IGN Fuse)
C21 – 6	ACC	Power Source (CIG Fuse)
C21 – 9	SR+	Front Airbag Sensor (RH)
C21 – 10	P+	Squib (Passenger)
C21 – 11	P–	Squib (Passenger)
C21 – 12	SIL	Diagnosis
C21 – 13	D–	Squib (Passenger)
C21 – 14	D+	Squib (Driver)
C21 – 15	SL+	Front Airbag Sensor (LH)
C21 – 19	Tc	Squib (Driver)
C21 – 20	SR–	Front Airbag Ssensor (RH)
C21 – 26	SL–	Front Airbag Sensor (LH)
C21 – 27	E1	Ground
C21 – 28	E2	Ground
C22 – 1	PL–	Squib (Seat belt pretensioner, LH)
C22 – 2	PL+	Squib (Seat belt pretensioner, LH)

EC0DZ–01

COMPONENTS

4WD (Except California Spec.)

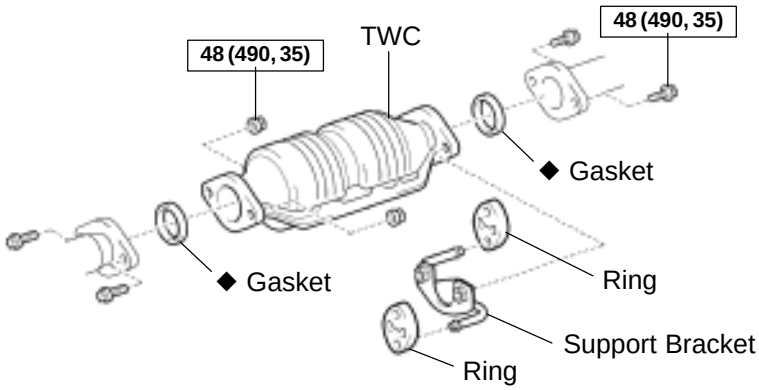

2WD, 4WD (California Spec.)

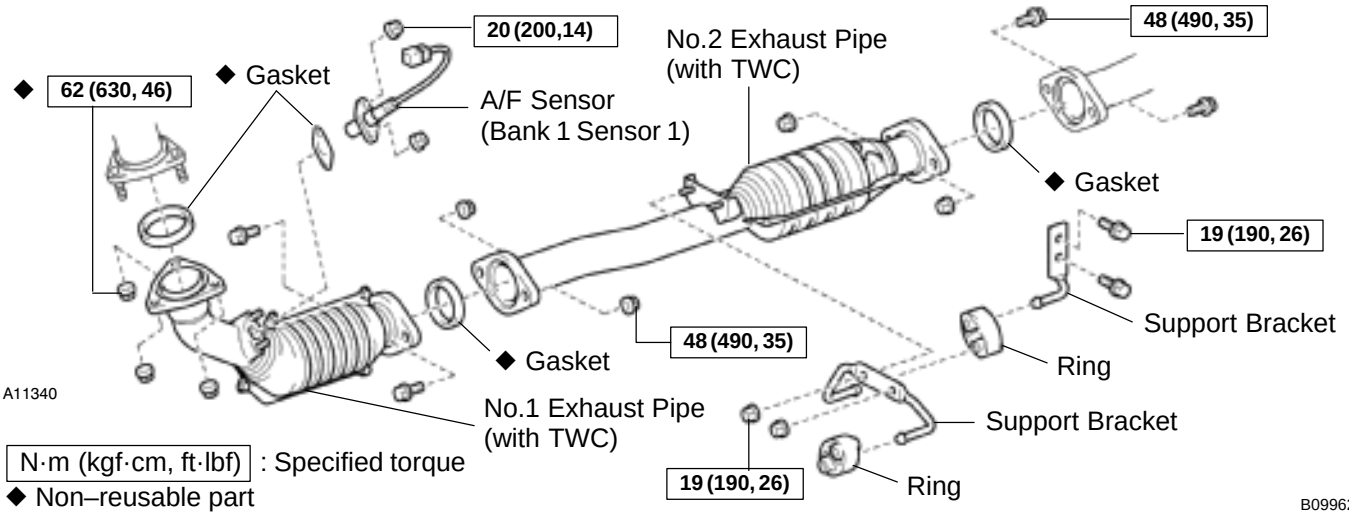

N·m (kgf·cm, ft·lbf) : Specified torque

◆ Non–reusable part

B09962

EC018–04

DRAWING

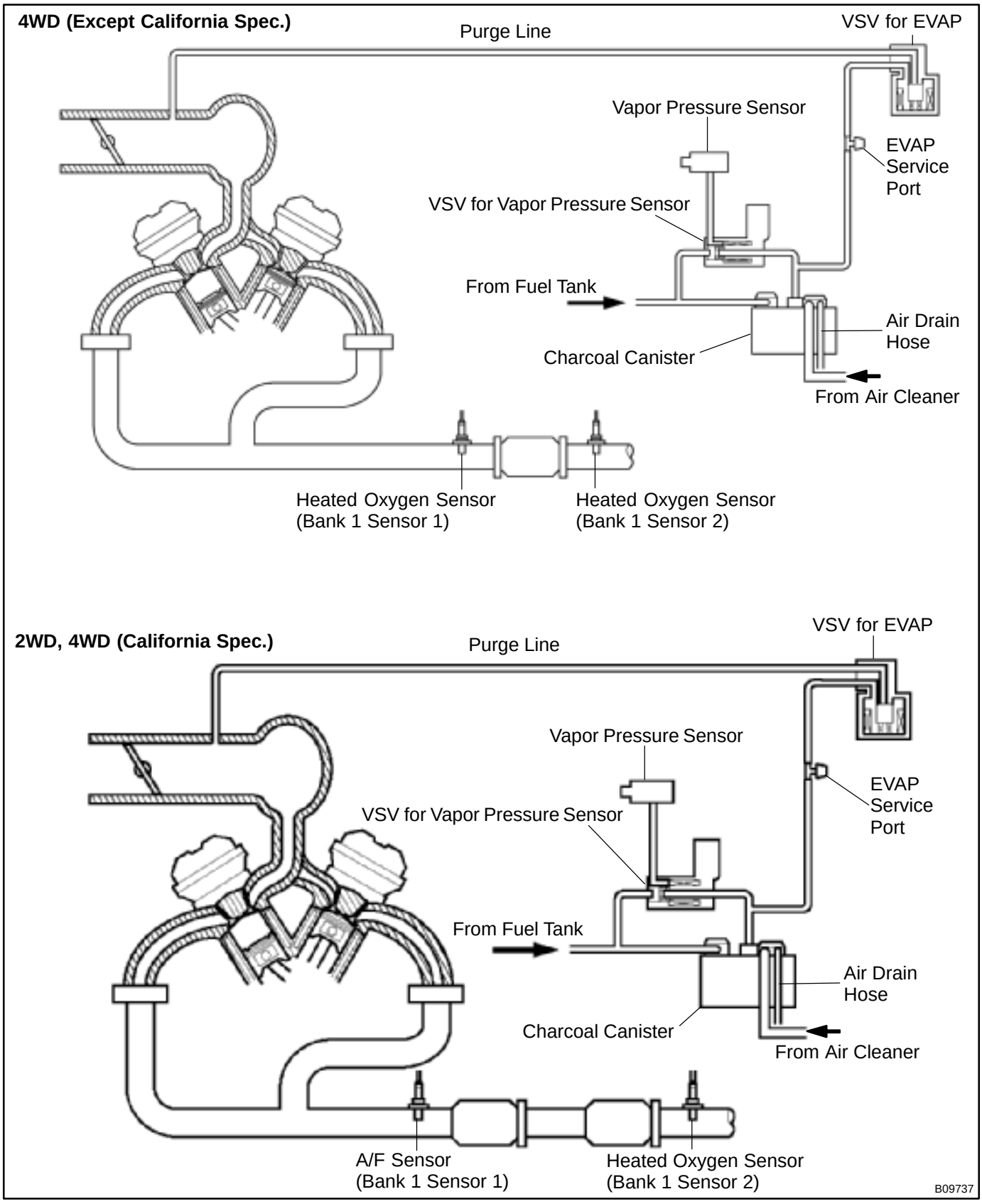

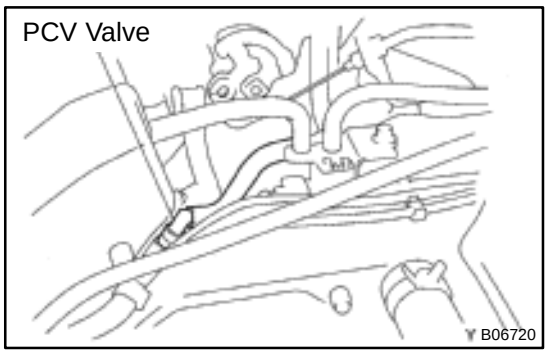

POSITIVE CRANKCASE VENTILATION (PCV) SYSTEM

EC0DY–01

INSPECTION

1. INSPECT PCV VALVE

(a) Remove the PCV valve.
  (1) Disconnect the PCV hose from the PCV valve.
  (2) Remove the PCV valve.

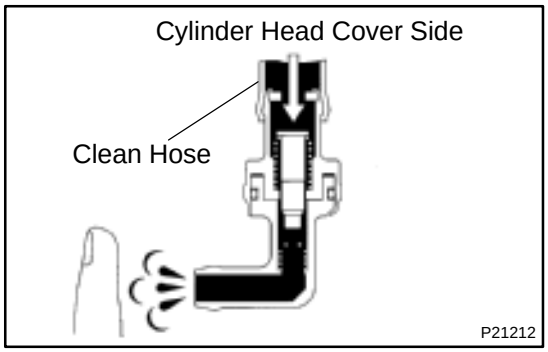

(b) Install a clean hose to the PCV valve.
(c) Inspect the PCV valve operation.
  (1) Blow air into the cylinder head cover side, and check that air passes through easily.

CAUTION:
Do not suck air through the valve. Petroleum substances inside the valve are harmful.

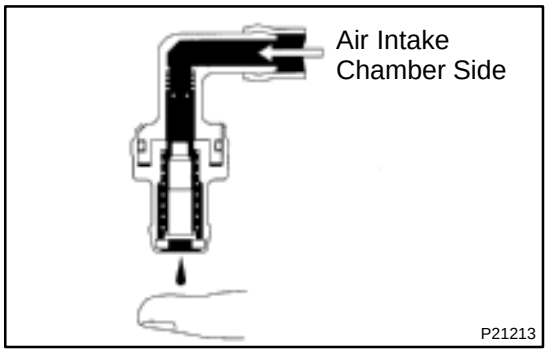

  (2) Blow air into the air intake chamber side, and check that air passes through with difficulty.
(d) Remove the clean hose from the PCV valve.
(e) Reinstall the PCV valve.

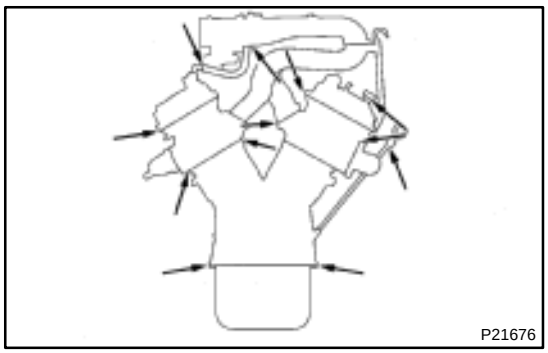

2. INSPECT HOSES, CONNECTIONS AND GASKETS

Visually check for cracks, leaks or damage.

EVAPORATIVE EMISSION (EVAP) CONTROL SYSTEM

EC0BM–02

INSPECTION

1. INSPECT LINES AND CONNECTIONS

Visually check for loose connections, sharp bends or damage.

2. INSPECT FUEL TANK

Visually check for deformation, cracks or fuel leakage.

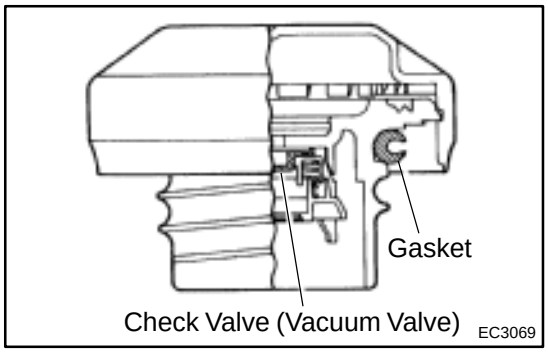

3. INSPECT FUEL TANK CAP

Visually check if the cap and/or gasket are deformed or damaged.

If necessary, repair or replace the cap.

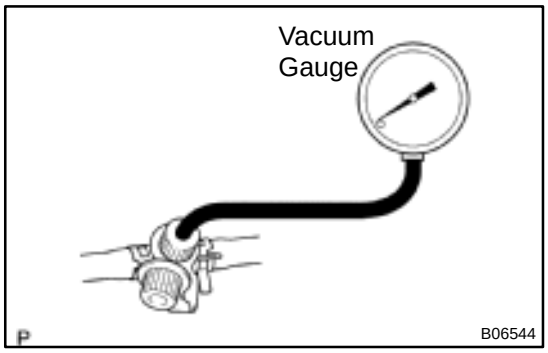

4. INSPECT EVAP SYSTEM LINE

(a) Warm up the engine and stop the engine.
Allow the engine to warm up to normal operating temperature.

(b) Install a vacuum gauge (EVAP control system test equipment vacuum gauge) to the EVAP service port on the purge line.

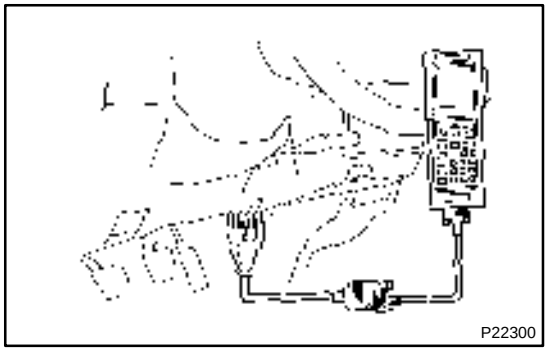

(c) TOYOTA Hand–Held Tester:
Forced driving of the VSV for the EVAP.
(1) Connect a TOYOTA hand–held tester to the DLC3.
(2) Start the engine.
(3) Push the TOYOTA hand–held tester main switch ON.
(4) Use the ACTIVE TEST mode on the TOYOTA hand–held tester to operate the VSV for the EVAP.

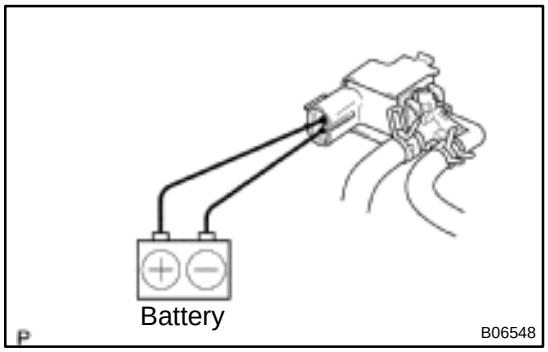

(d) If you have no TOYOTA Hand–Held Tester:
Forced driving of the VSV for the EVAP.
(1) Disconnect the VSV connector for the EVAP.
(2) Connect the positive (+) and negative (–) leads from the battery to the VSV terminals for the EVAP.
(3) Start the engine.

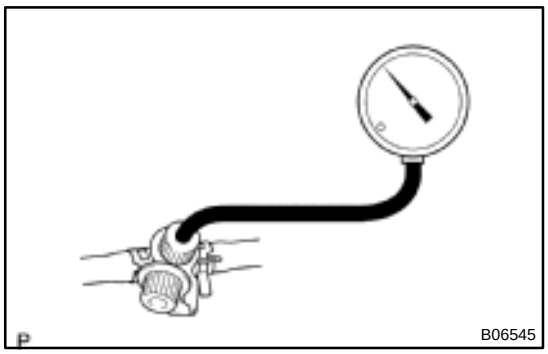

(e) Check the vacuum at idle.
Vacuum:
Maintain at 0.368 – 19.713 in.Hg (5 – 268 in.Aq) for over 5 seconds

HINT:
If the vacuum does not change, you can conclude that the hose connecting the VSV to the service port has come loose or is blocked, or the VSV is malfunctioning.

(f) TOYOTA Hand–Held Tester:
Conclude forced driving of the VSV for the EVAP.
(1) Stop the engine.
(2) Disconnect the TOYOTA hand–held tester from the DLC3.

(g) If you have no TOYOTA Hand–Held Tester:
Conclude forced driving of the VSV for the EVAP.
(1) Stop the engine.
(2) Disconnect the positive (+) and negative (–) leads from the battery from the VSV terminals for the EVAP.
(3) Connect the VSV connector for the EVAP.

(h) Disconnect the vacuum gauge from the EVAP service port on the purge line.

(i) Connect a pressure gauge to the EVAP service port on the purge line.

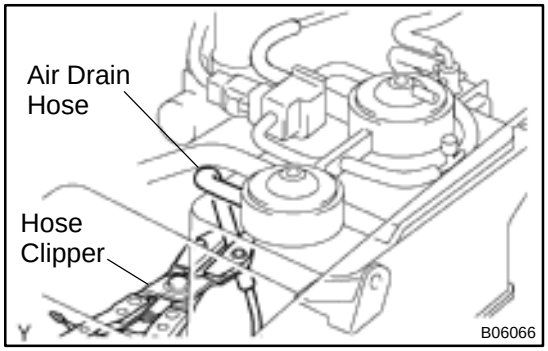

(j) Check the pressure.
(1) Close off the air drain hose at the marked position of the canister with a hose clipper or similar instrument.

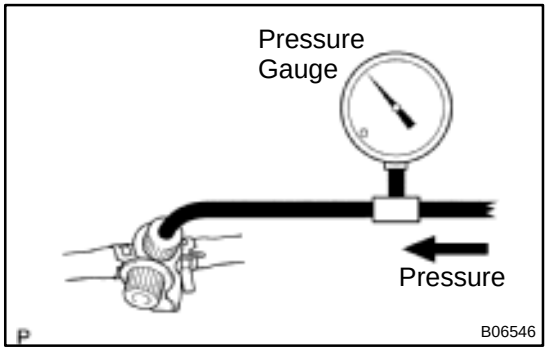

(2) Add the pressure (13.5 – 15.5 in.Aq) from the EVAP service port.
Pressure:
2 minutes after the pressure is added, the gauge should be over 7.7 – 8.8 in.Aq.

HINT:
If you can't add pressure, you can conclude that the hose connecting the VSV ~ canister ~ fuel tank has slipped off or the VSV is open.

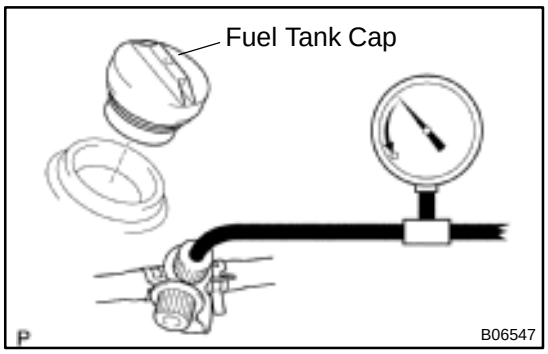

(3) Check if the pressure decreases when the fuel tank cap is removed while adding pressure.

HINT:

If the pressure does not decrease when the filler cap is removed, then you can conclude that the hose connecting the service port to the fuel tank is blocked, etc.

(k) Disconnect the pressure gauge from the EVAP service port on the purge line.

5. INSPECT CHARCOAL CANISTER

(a) Remove the charcoal canister.

(b) Remove the VSV for EVAP.

(c) Remove the VSV for vapor pressure sensor.

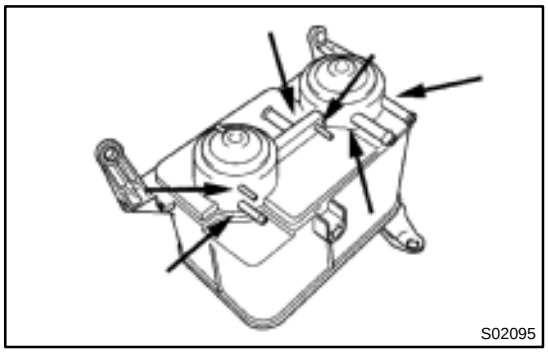

(d) Visually check the charcoal canister for cracks or damage.

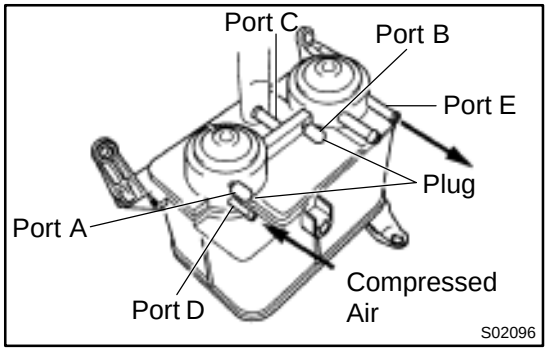

(e) Inspect the charcoal canister operation.

(1) Install the plugs to ports A and B.

(2) While holding port C closed, blow air (1.47 kPa, 15 gf/cm^2, 0.21 psi) into port D and check that air flows from port E.

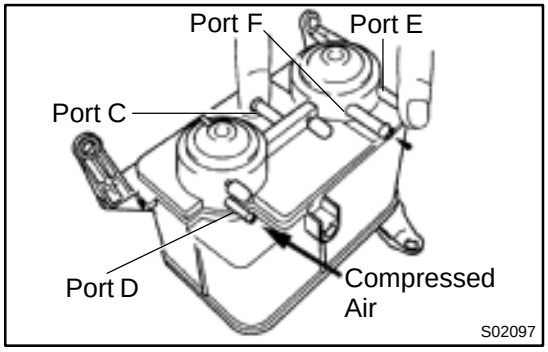

(3) While holding ports C and E closed, blow air (1.47 kPa, 15 gf/cm^2, 0.21 psi) into port D and check that air does not flow from port F.

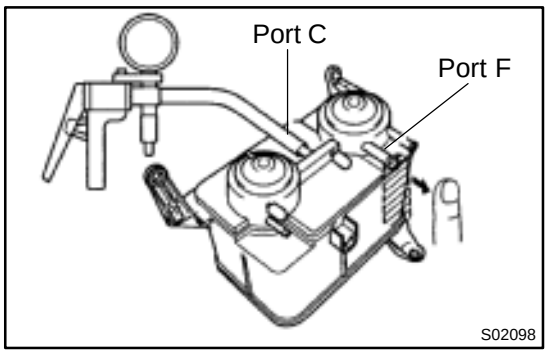

(4) Apply vacuum (2.94 kPa, 22 mmHg, 0.87 in.Hg) to port C, check that the vacuum does not decrease when port F is closed, and check that the vacuum decreases when port F is released.

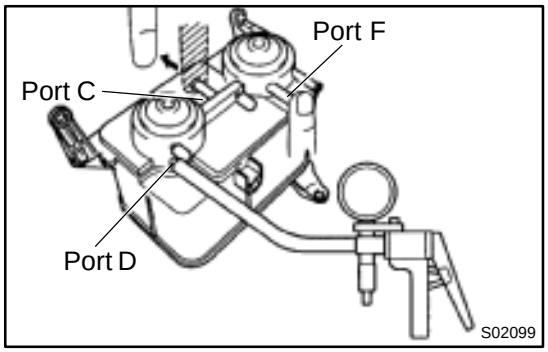

(5) While holding port F closed, apply vacuum (2.94 kPa, 22 mmHg, 0.87 in.Hg) to port D,check that the vacuum does not decrease when port C is closed, and check that the vacuum decreases when port C is released.

If operation is not specified, replace the charcoal canister.

(6) Remove the plugs.

(f) Reinstall the VSV for EVAP.

(g) Reinstall the VSV for vapor pressure sensor.

(h) Reinstall the charcoal canister.

6. INSPECT VSV FOR EVAP (See page SF–44)

7. INSPECT VSV FOR VAPOR PRESSURE SENSOR (See page SF–48)

8. INSPECT VAPOR PRESSURE SENSOR (See page SF–48)

PARTS LAYOUT AND SCHEMATIC DRAWING

LOCATION

EC017–04

4WD (Except California Spec.)

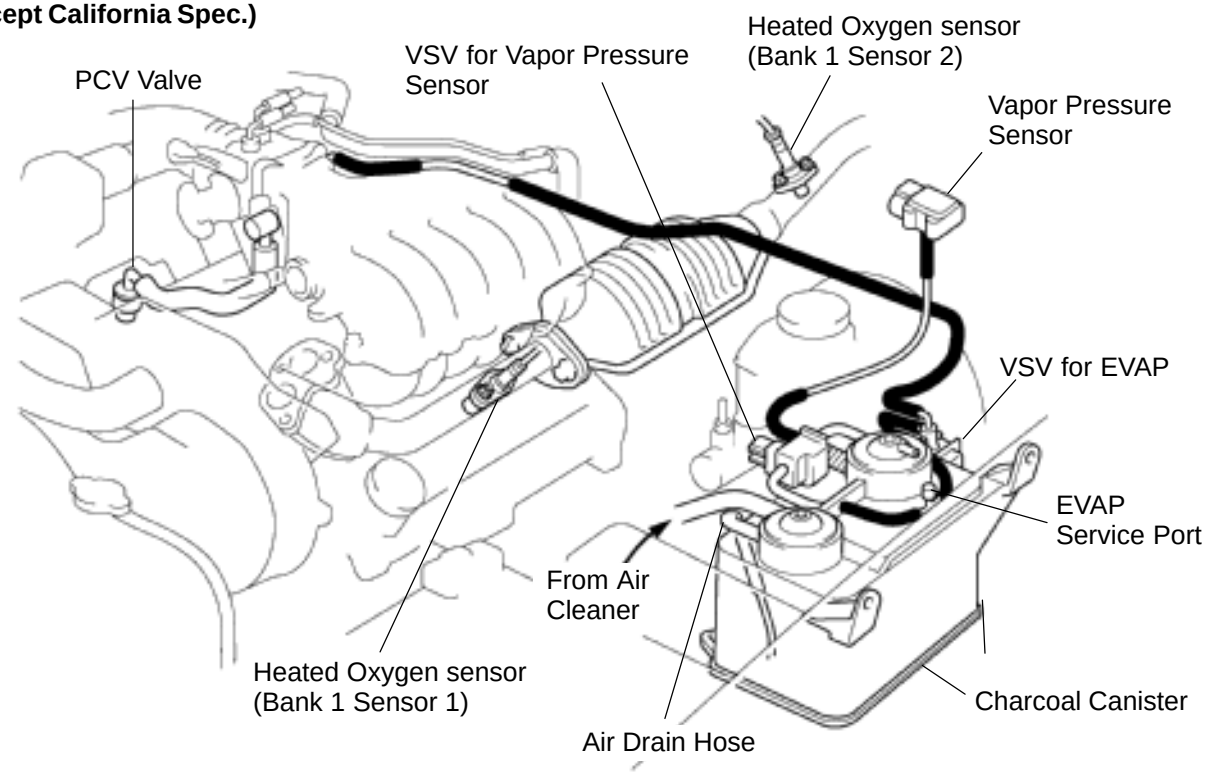

2WD, 4WD (California Spec.)

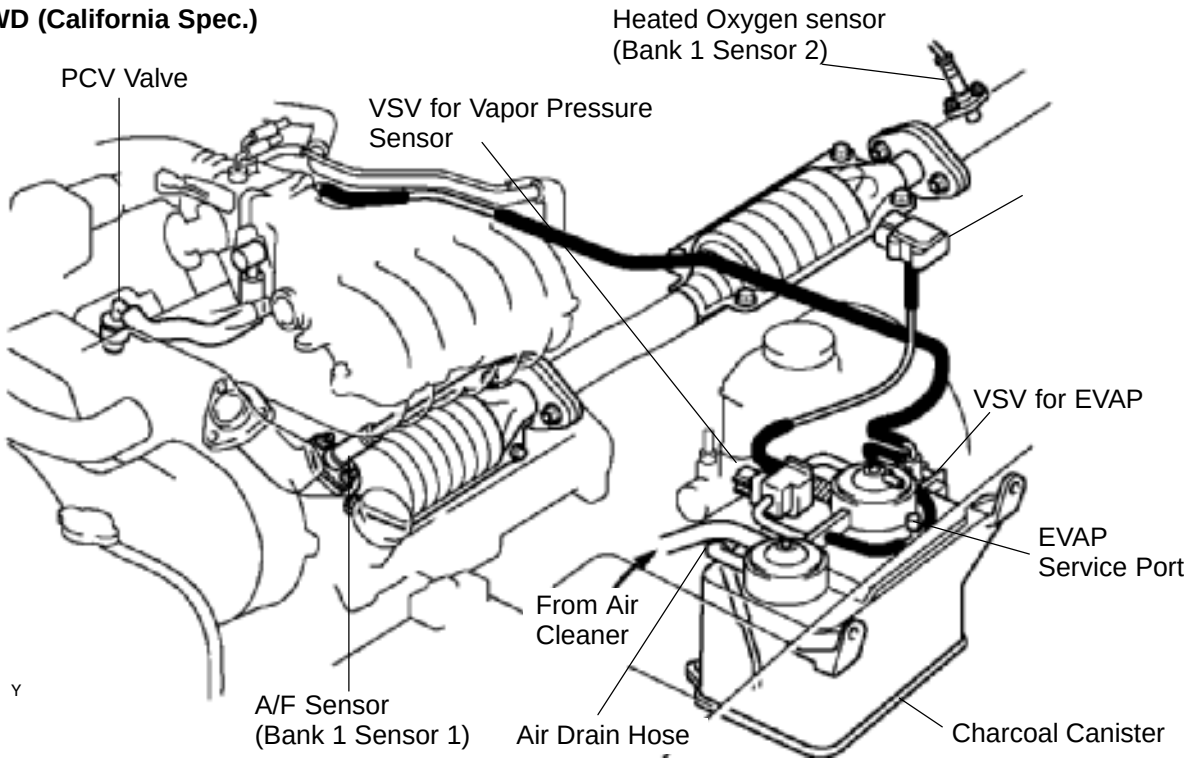

B06062
A11320

B09736

THREE–WAY CATALYTIC CONVERTER (TWC) SYSTEM

EC0BN–01

ON–VEHICLE INSPECTION

1. INSPECT EXHAUST PIPE ASSEMBLY

(a) Check the connections for looseness or damage.

(b) Check the clamps for weakness, cracks or damage.

2. INSPECT TWC

Check for dents or damage.

If any part of the protector is damaged or dented to the extent that it contacts the TWC, repair or replace it.

3. INSPECT TWC HEAT INSULATOR

(a) Check the heat insulator for damage.

(b) Check for adequate clearance between the TWC and heat insulator.

EMISSION CONTROL SYSTEM

EC016–04

PURPOSE

The emission control systems are installed to reduce the amount of CO, HC and NOx exhausted from the engine (3 and 4), to prevent the atmospheric release of blow–by gas–containing HC (1) and evaporated fuel containing HC being released from the fuel tank (2).
The function of each system is shown in these table.

System	Abbreviation	Function
1. Positive Crankcase Ventilation	PCV	Reduces crankcase blow–by gas (HC)
2. Evaporative Emission Control	EVAP	Reduces evaporated HC
3. Three–Way Catalytic Converter	TWC	Reduces CO, HC and NOx
4. Sequential Multiport Fuel Injection *	SFI	Injects a precisely timed, optimum amount of fuel for reduced exhaust emissions

Remark: * For inspection and repair of the SFI system, refer to the SF section of this manual.

TIMING BELT

EM01H–09

COMPONENTS

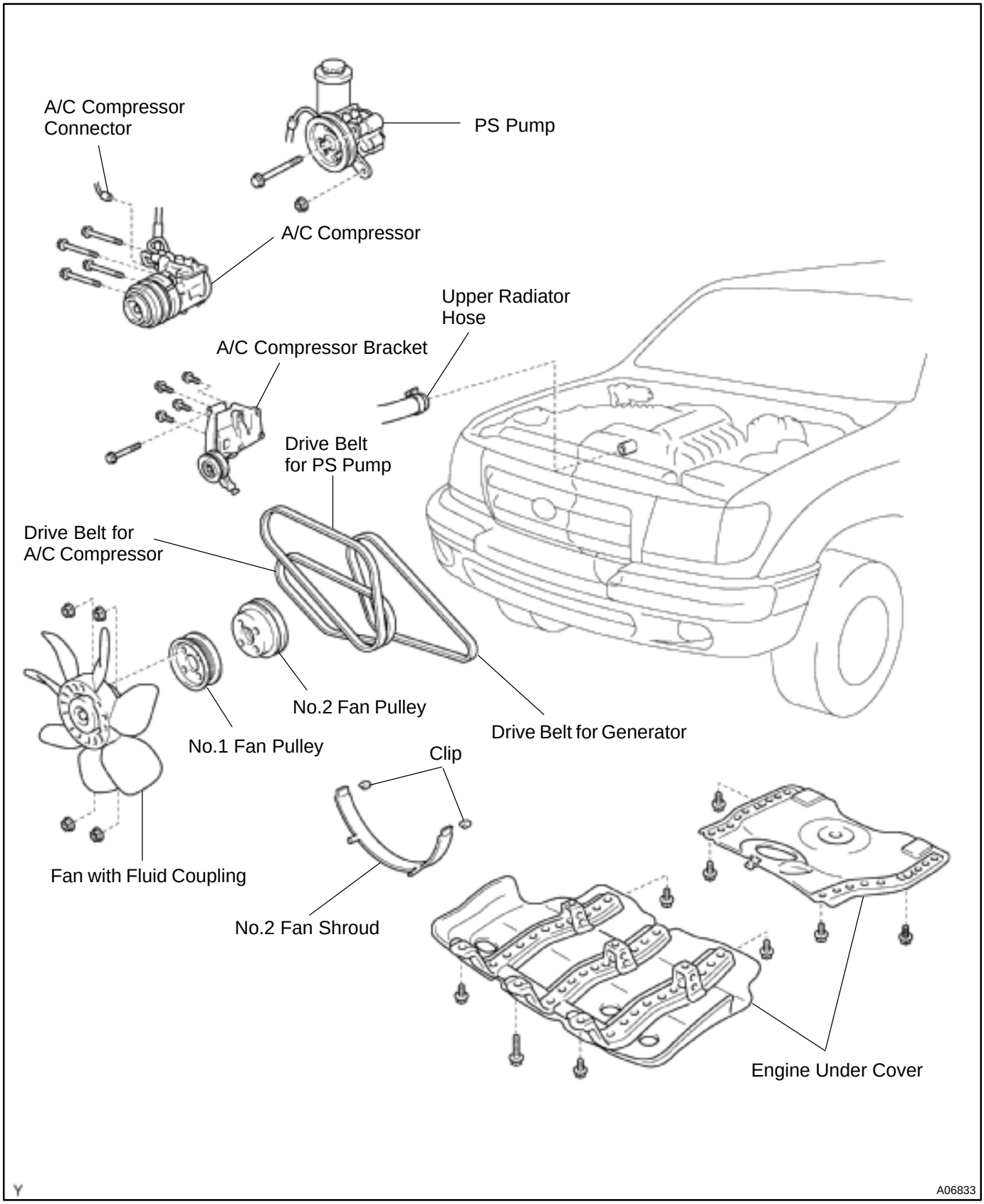

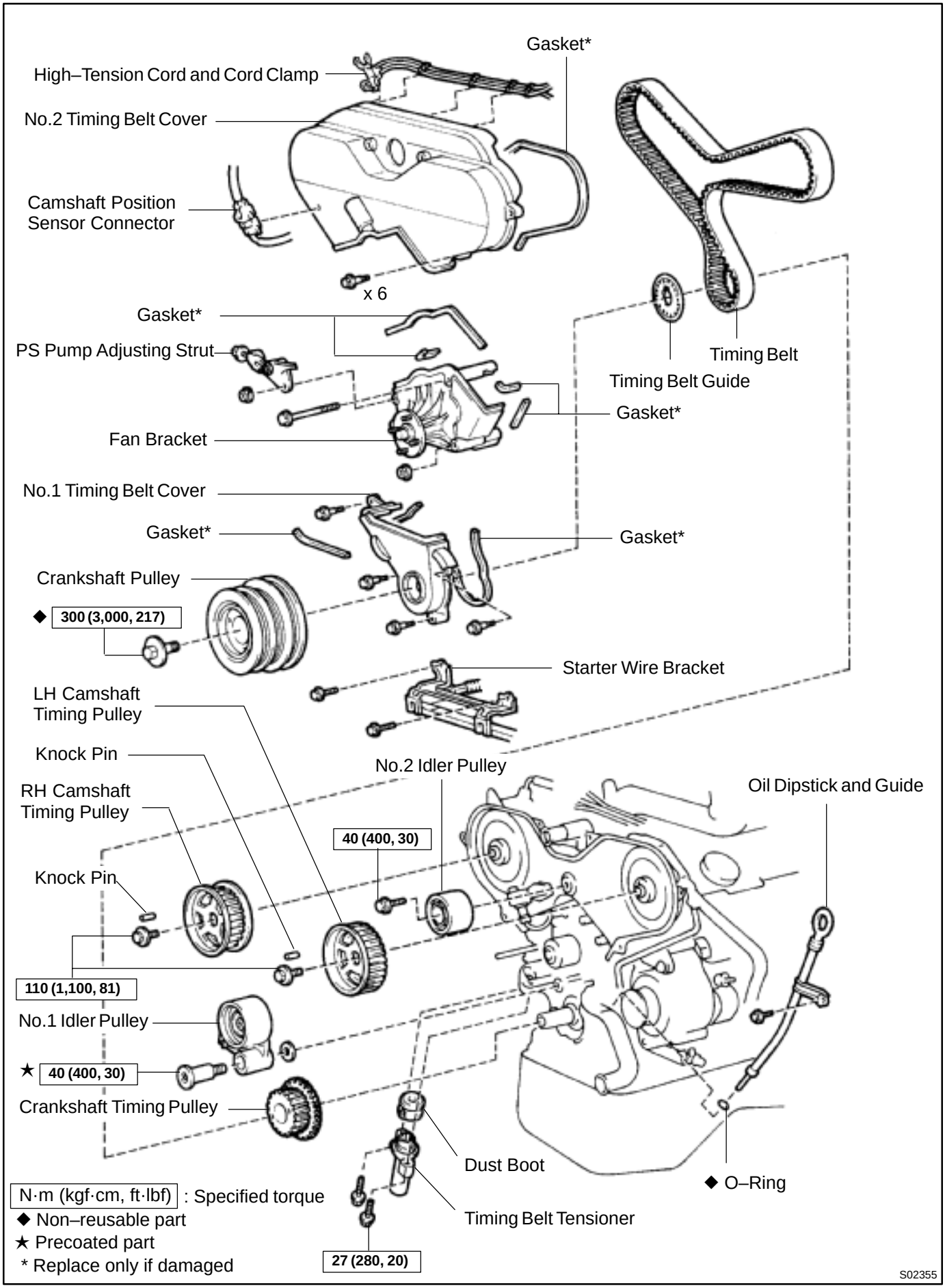
Gasket*
High–Tension Cord and Cord Clamp
No.2 Timing Belt Cover
Camshaft Position Sensor Connector
x 6
Gasket*
PS Pump Adjusting Strut
Timing Belt
Timing Belt Guide
Gasket*
Fan Bracket
No.1 Timing Belt Cover
Gasket*
Gasket*
Crankshaft Pulley
◆ 300 (3,000, 217)
Starter Wire Bracket
LH Camshaft Timing Pulley
Knock Pin
No.2 Idler Pulley
Oil Dipstick and Guide
RH Camshaft Timing Pulley
40 (400, 30)
Knock Pin
110 (1,100, 81)
No.1 Idler Pulley
★ 40 (400, 30)
Crankshaft Timing Pulley
Dust Boot
◆ O–Ring
Timing Belt Tensioner
27 (280, 20)
N·m (kgf·cm, ft·lbf) : Specified torque
◆ Non–reusable part
★ Precoated part
* Replace only if damaged
S02355

CYLINDER HEAD

EM16C–01

COMPONENTS

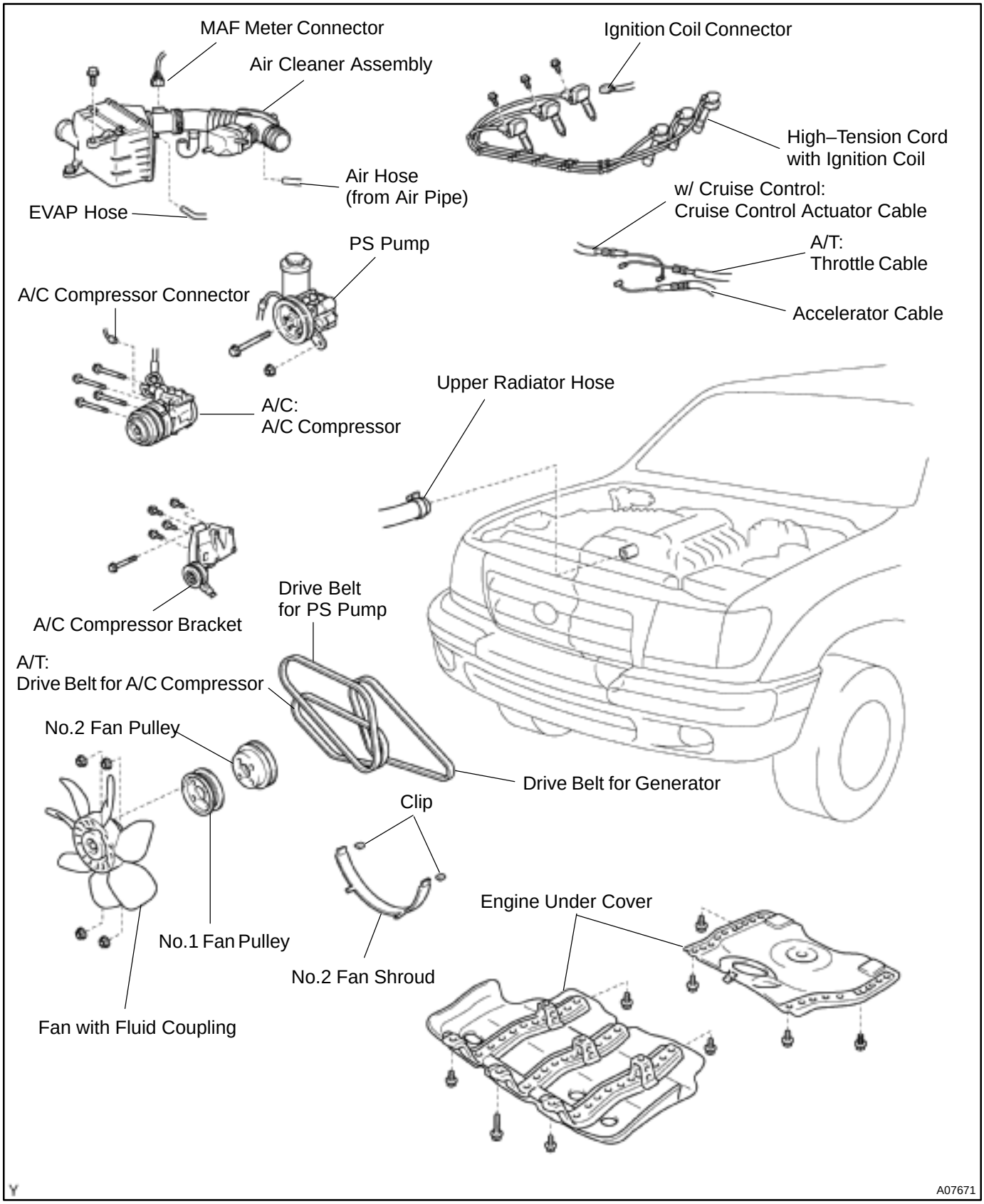

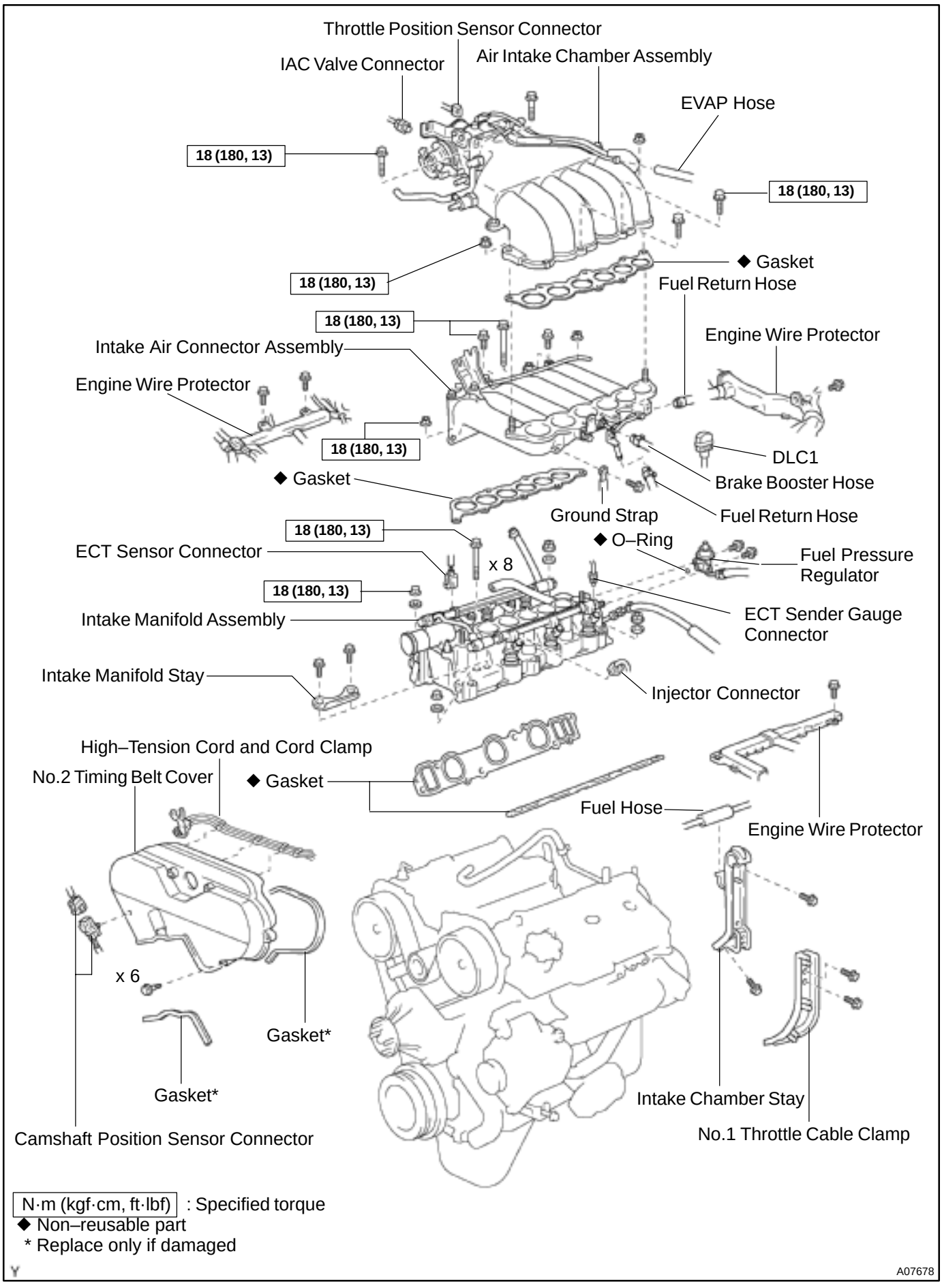

N·m (kgf·cm, ft·lbf) : Specified torque
◆ Non–reusable part
* Replace only if damaged

A07678

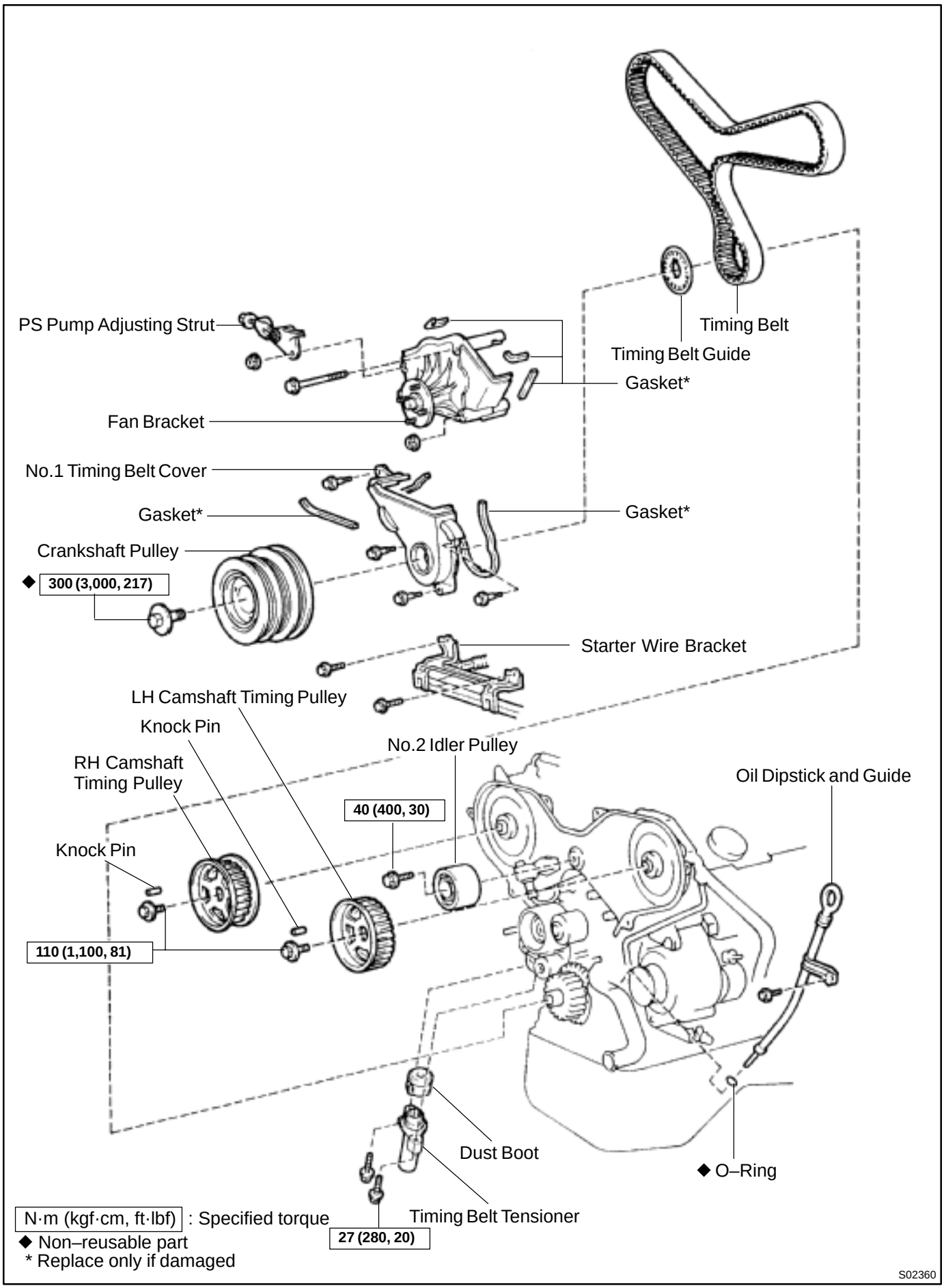
PS Pump Adjusting Strut
Timing Belt
Timing Belt Guide
Gasket*
Fan Bracket
No.1 Timing Belt Cover
Gasket*
Gasket*
Crankshaft Pulley
◆ 300 (3,000, 217)
Starter Wire Bracket
LH Camshaft Timing Pulley
Knock Pin
No.2 Idler Pulley
RH Camshaft Timing Pulley
Oil Dipstick and Guide
40 (400, 30)
Knock Pin
110 (1,100, 81)
Dust Boot
◆ O–Ring
Timing Belt Tensioner
27 (280, 20)
N·m (kgf·cm, ft·lbf) : Specified torque
◆ Non–reusable part
* Replace only if damaged
S02360

4WD (Except California Spec.)

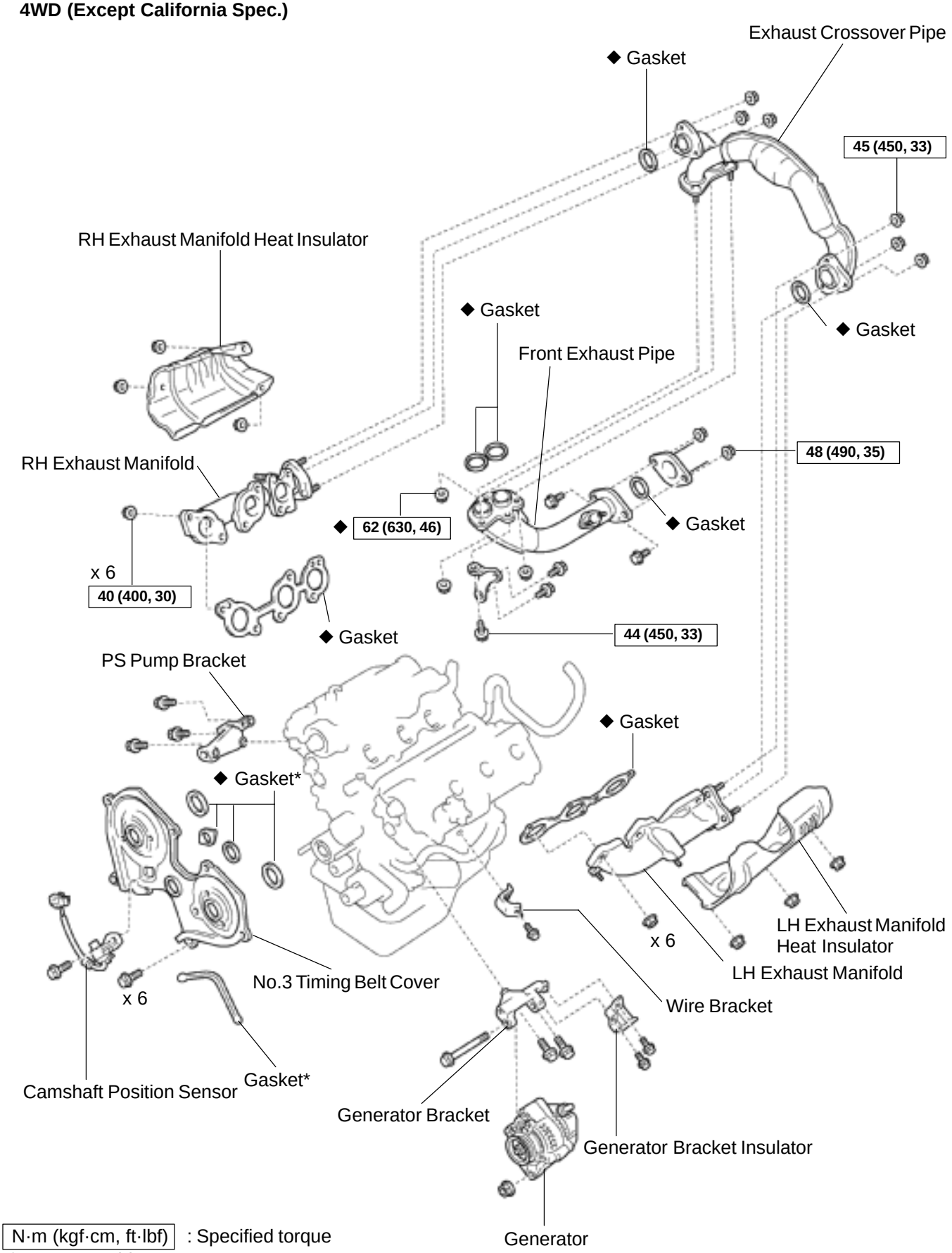

N·m (kgf·cm, ft·lbf) : Specified torque
◆ Non–reusable part
*Replace only if damaged

A06831

2WD, 4WD (California Spec.)

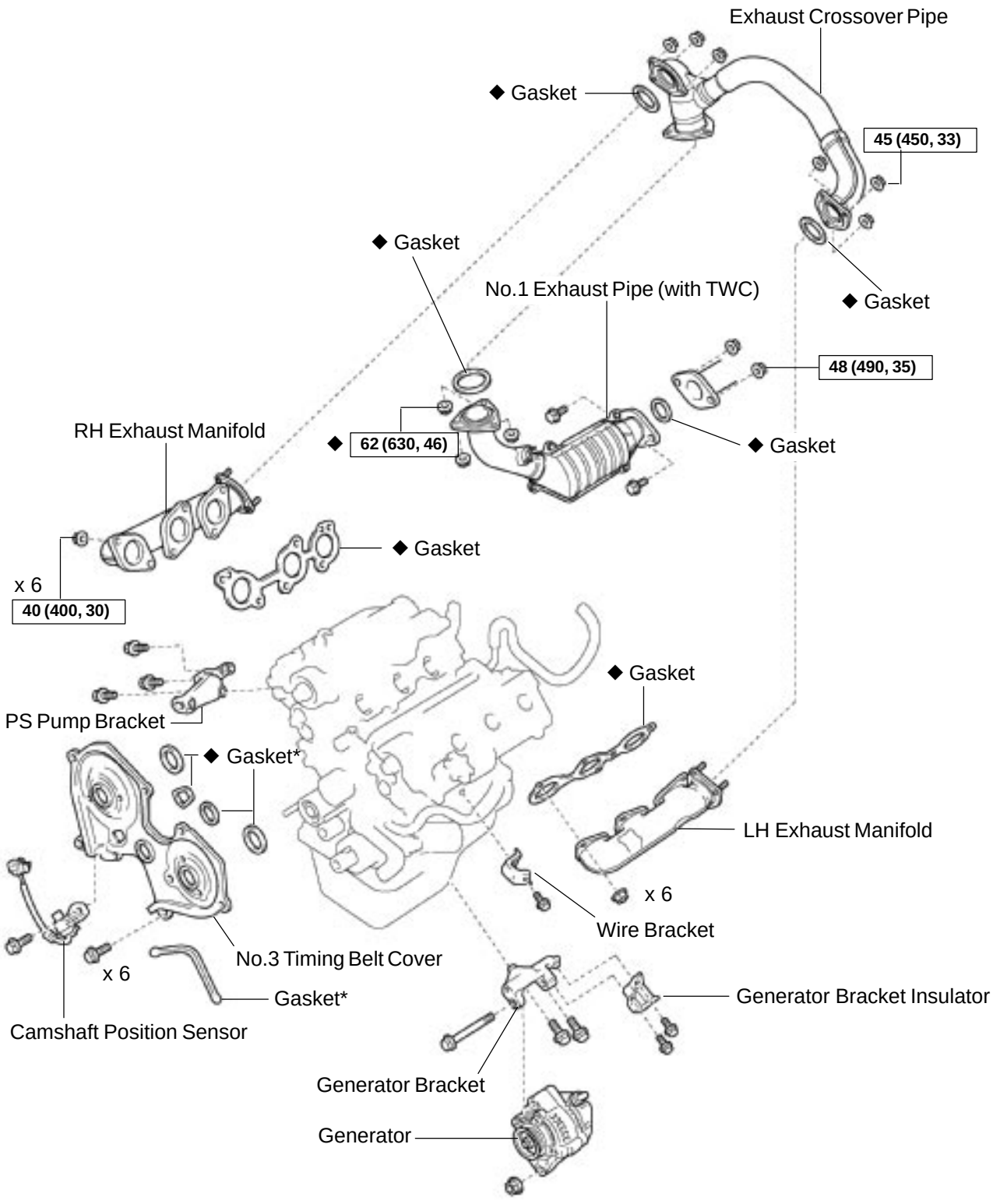

N·m (kgf·cm, ft·lbf) : Specified torque
◆ Non–reusable part
*Replace only if damaged

A11032

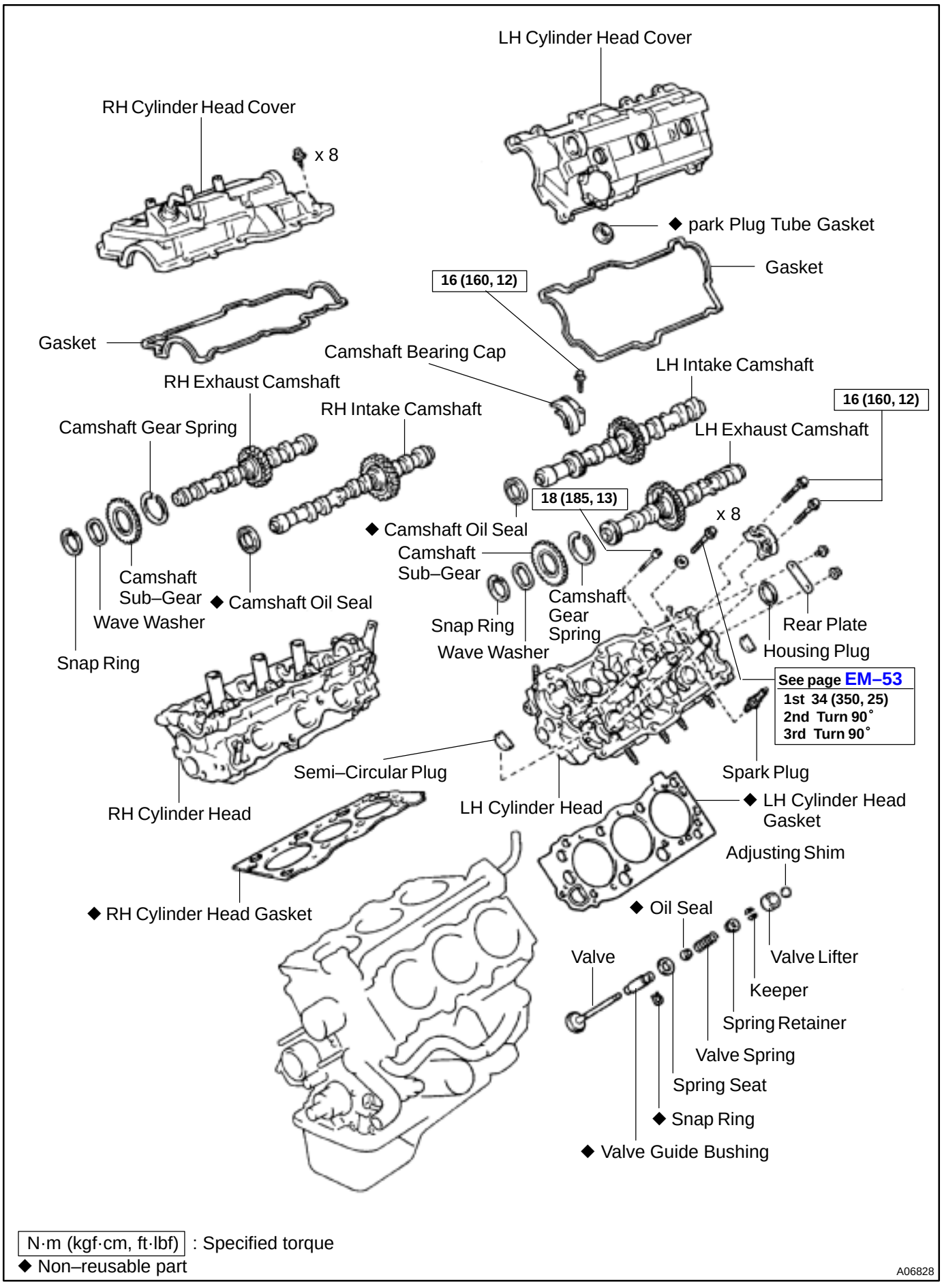
LH Cylinder Head Cover
RH Cylinder Head Cover
x 8
◆ park Plug Tube Gasket
Gasket
16 (160, 12)
Gasket
Camshaft Bearing Cap
LH Intake Camshaft
RH Exhaust Camshaft
RH Intake Camshaft
16 (160, 12)
Camshaft Gear Spring
LH Exhaust Camshaft
18 (185, 13)
x 8
◆ Camshaft Oil Seal
Camshaft Sub–Gear
Camshaft Sub–Gear
◆ Camshaft Oil Seal
Wave Washer
Snap Ring
Snap Ring
Camshaft Gear Spring
Wave Washer
Rear Plate
Housing Plug
See page EM–53
1st 34 (350, 25)
2nd Turn 90°
3rd Turn 90°
Semi–Circular Plug
Spark Plug
RH Cylinder Head
LH Cylinder Head
◆ LH Cylinder Head Gasket
Adjusting Shim
◆ RH Cylinder Head Gasket
◆ Oil Seal
Valve
Valve Lifter
Keeper
Spring Retainer
Valve Spring
Spring Seat
◆ Snap Ring
◆ Valve Guide Bushing
N·m (kgf·cm, ft·lbf) : Specified torque
◆ Non–reusable part
A06828

ENGINE UNIT (4WD)

EM01U–07

COMPONENTS

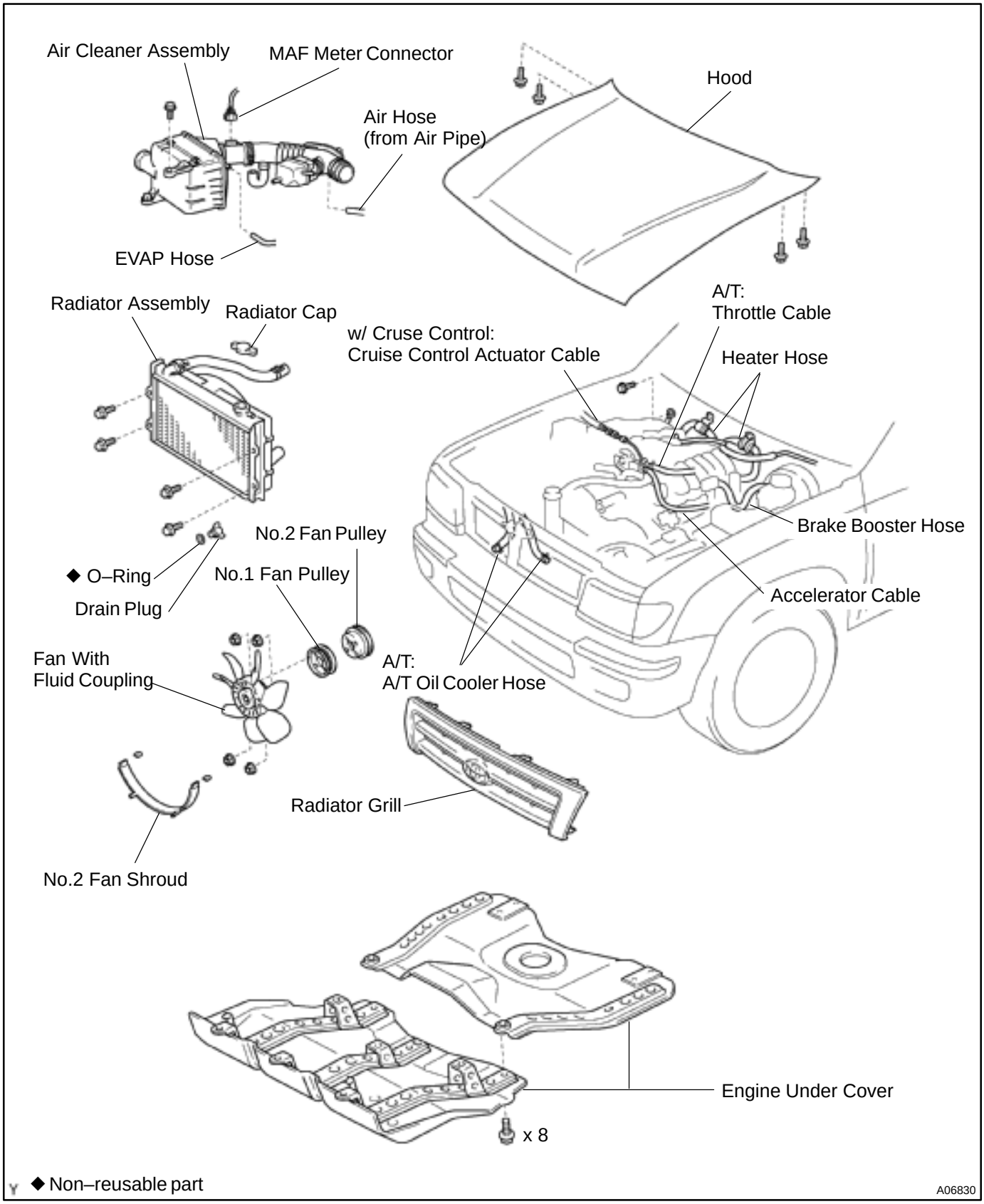

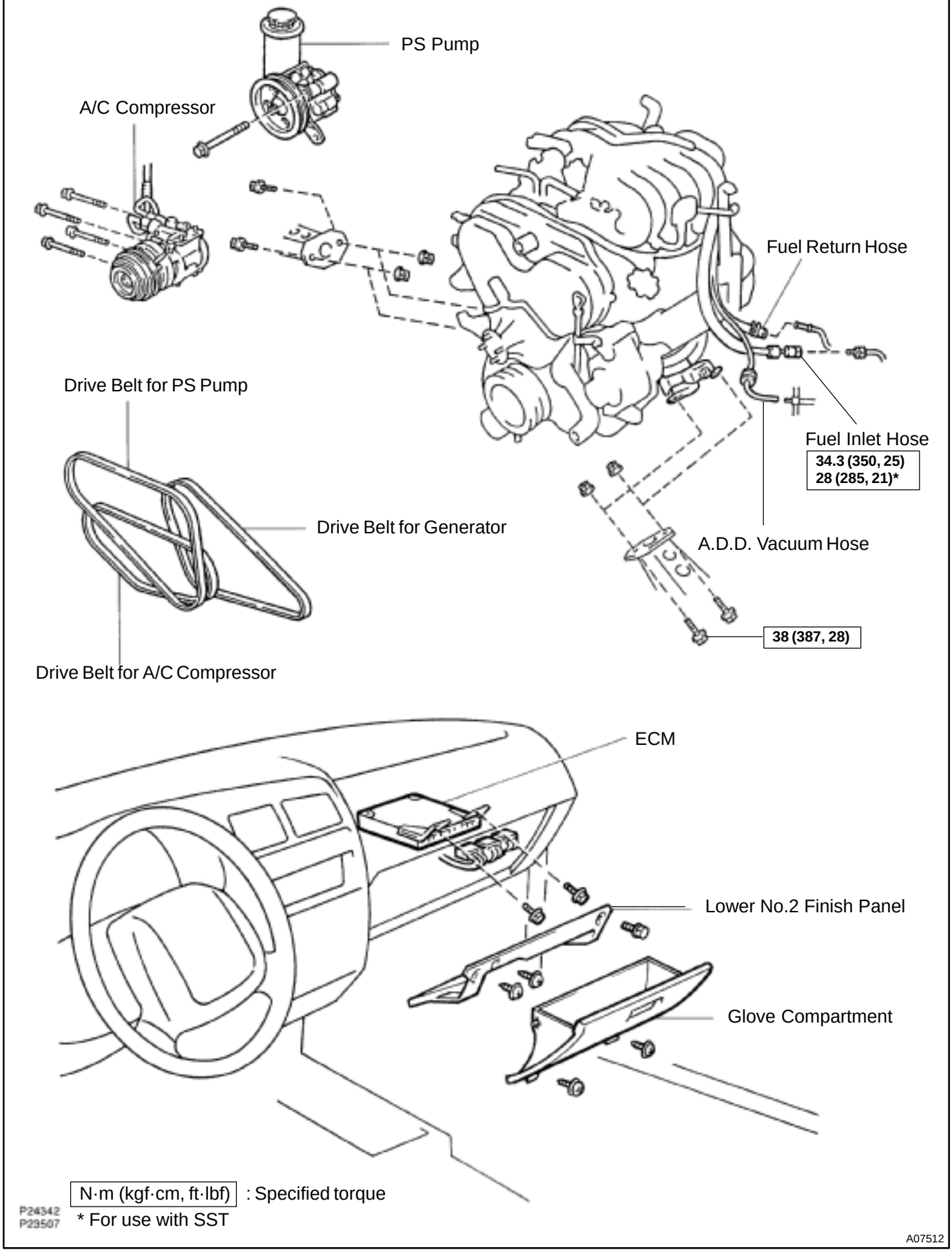
PS Pump
A/C Compressor
Fuel Return Hose
Drive Belt for PS Pump
Fuel Inlet Hose
34.3 (350, 25)
28 (285, 21)*
Drive Belt for Generator
A.D.D. Vacuum Hose
38 (387, 28)
Drive Belt for A/C Compressor
ECM
Lower No.2 Finish Panel
Glove Compartment
N·m (kgf·cm, ft·lbf) : Specified torque
* For use with SST
P24342
P23507
A07512

CYLINDER BLOCK

COMPONENTS

EM01X–08

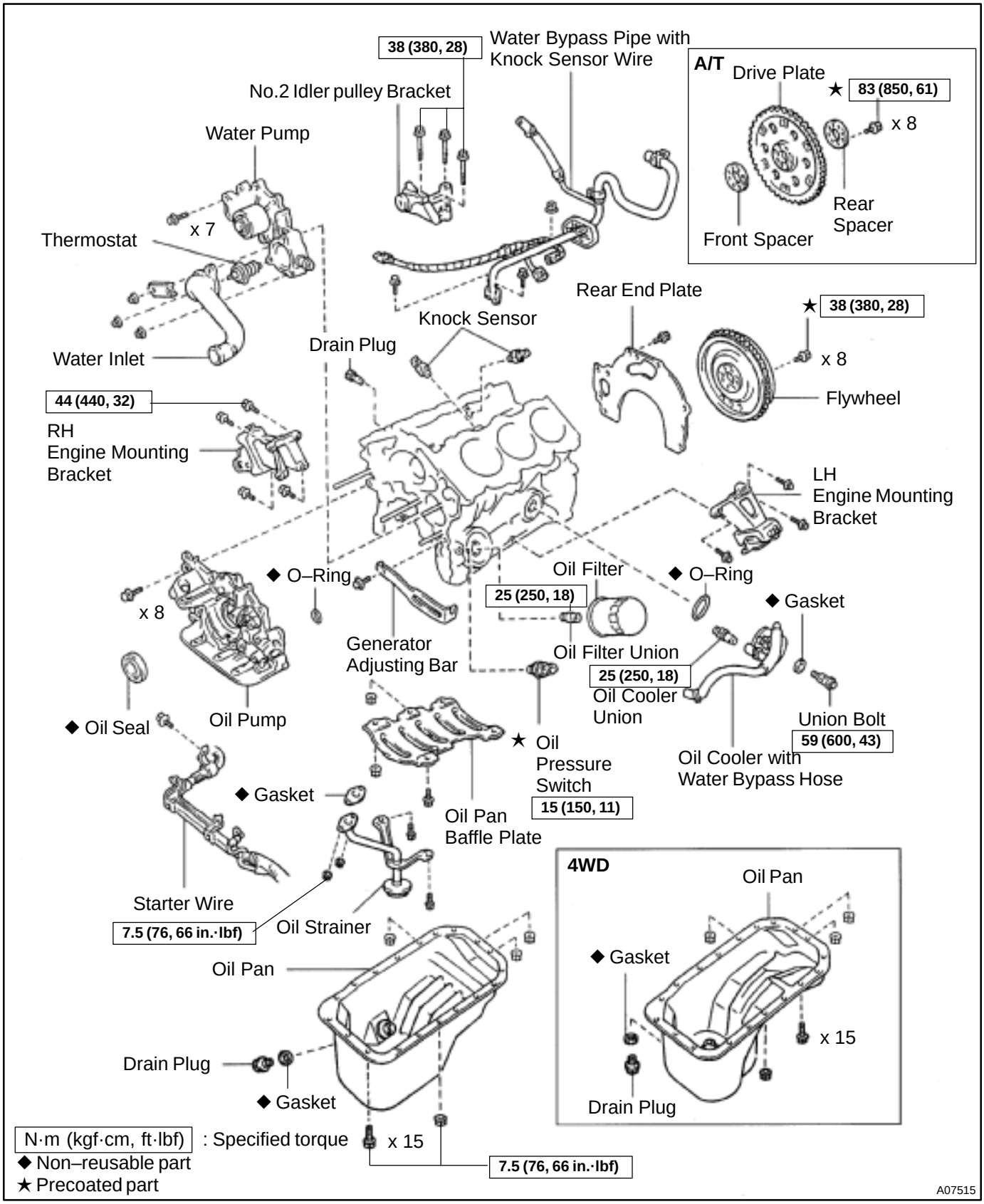

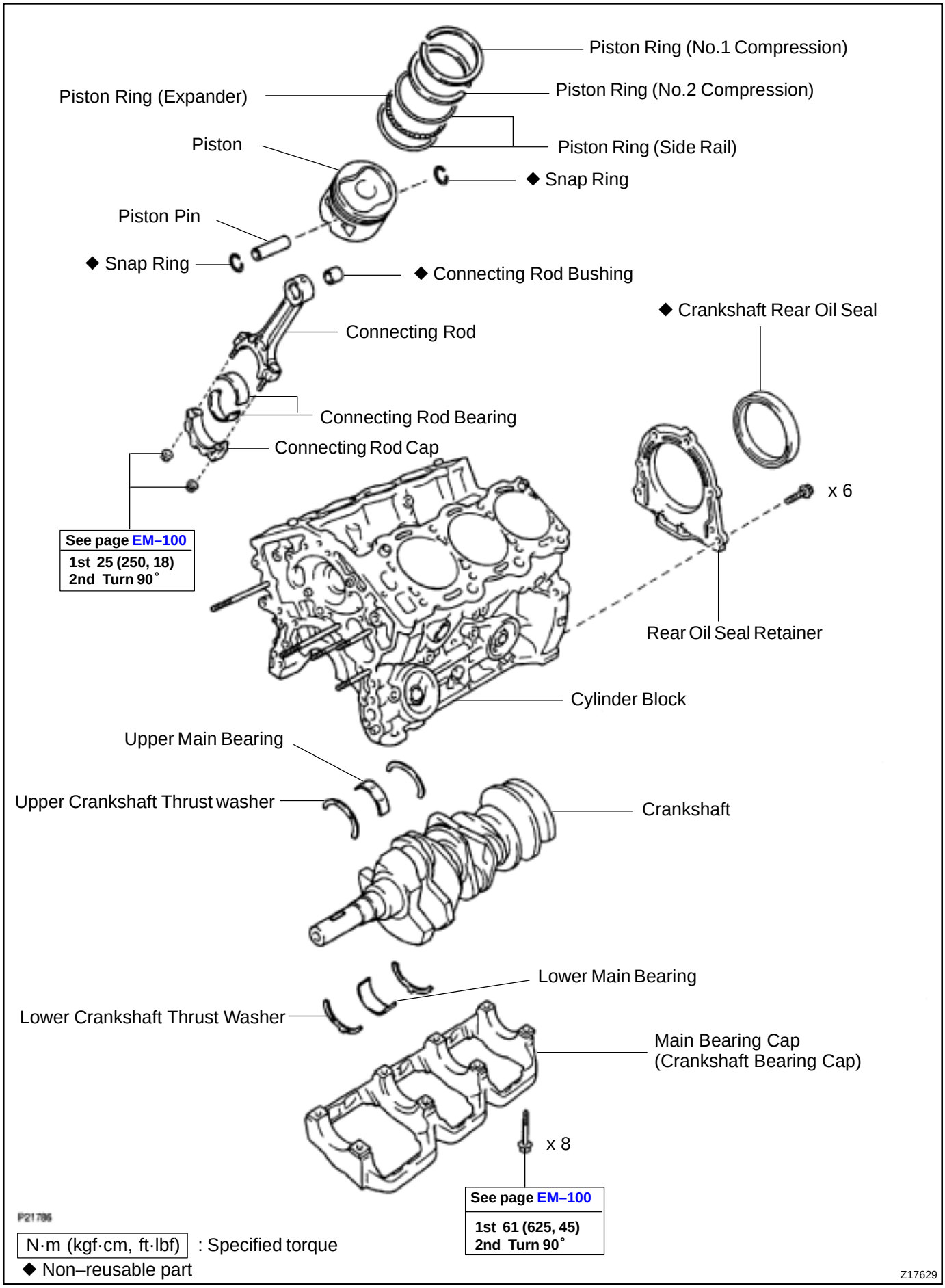
Piston Ring (No.1 Compression)
Piston Ring (Expander)
Piston Ring (No.2 Compression)
Piston
Piston Ring (Side Rail)
◆ Snap Ring
Piston Pin
◆ Snap Ring
◆ Connecting Rod Bushing
◆ Crankshaft Rear Oil Seal
Connecting Rod
Connecting Rod Bearing
Connecting Rod Cap
x 6
See page EM–100
1st 25 (250, 18)
2nd Turn 90°
Rear Oil Seal Retainer
Cylinder Block
Upper Main Bearing
Upper Crankshaft Thrust washer
Crankshaft
Lower Main Bearing
Lower Crankshaft Thrust Washer
Main Bearing Cap
(Crankshaft Bearing Cap)
x 8
See page EM–100
1st 61 (625, 45)
2nd Turn 90°
P21786
N·m (kgf·cm, ft·lbf) : Specified torque
◆ Non–reusable part
Z17629

EXHAUST SYSTEM

EM16G–01

COMPONENTS

4WD (Except California Spec.)

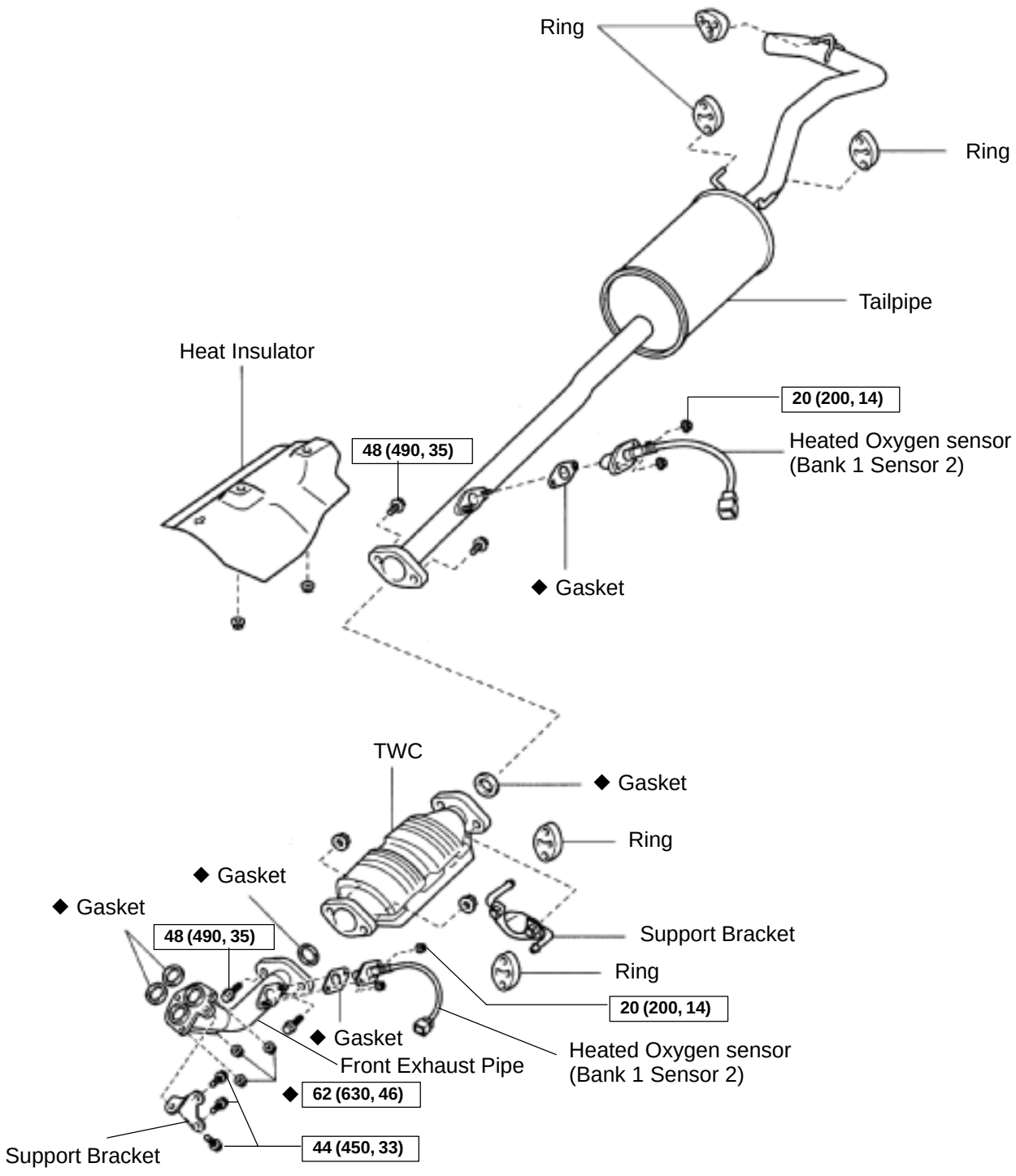

N·m (kgf·cm, ft·lbf) : Specified torque

◆ Non–reusable part

A07516

2WD, 4WD (California Spec.)

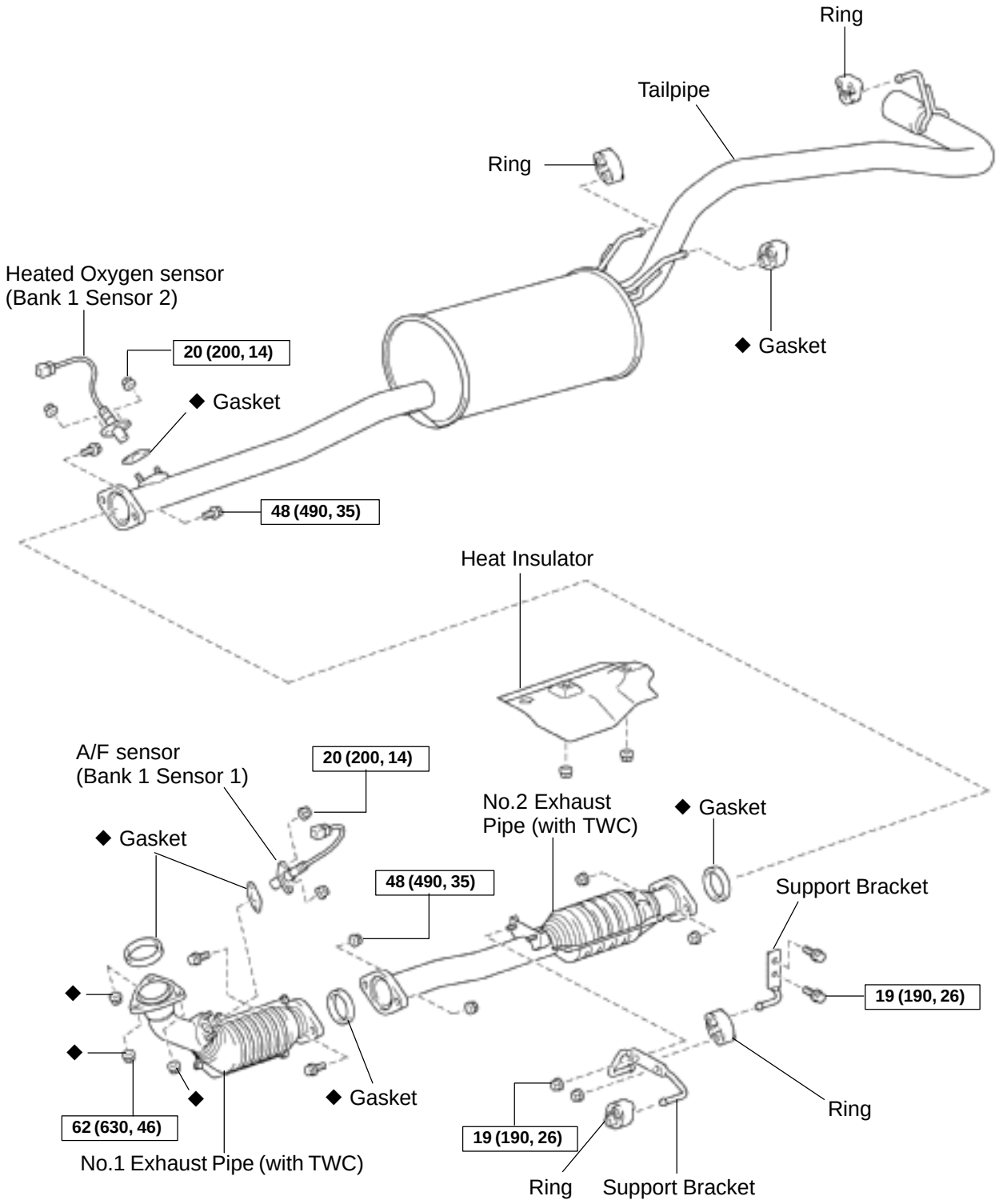

P

N·m (kgf·cm, ft·lbf) : Specified torque

◆ Non–reusable part

A11033

EM01N–07

DISASSEMBLY

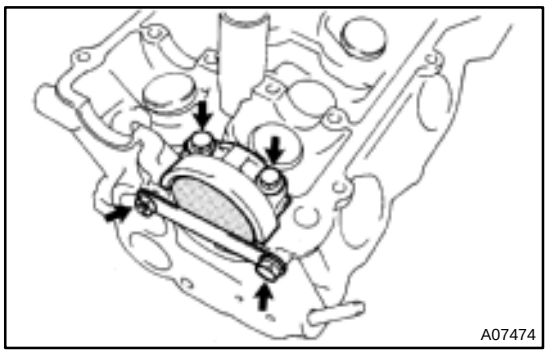

1. REMOVE CAMSHAFT HOUSING PLUGS

(a) Remove the bolt, nut and cylinder head rear plate.

(b) Remove the 2 bolts and camshaft bearing cap and housing plug.

2. REMOVE VALVE LIFTERS AND SHIMS

Pull out the valve lifter and shim by hand.

HINT:

Arrange the valve lifters and shims in correct order.

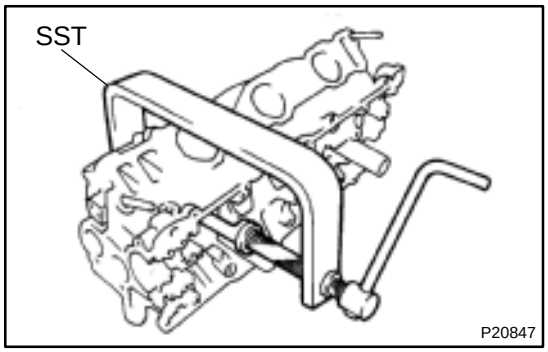

3. REMOVE VALVES

(a) Using SST, compress the valve spring and remove the 2 keepers.

SST 09202–70020

(b) Remove the spring retainer, valve spring and valve.

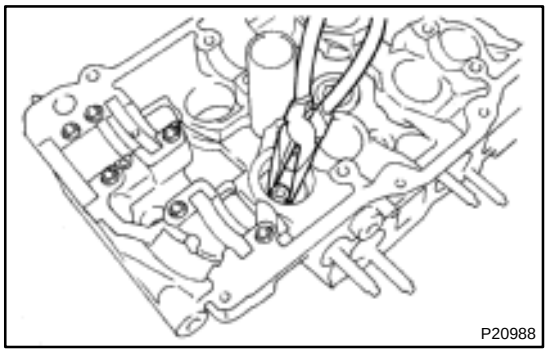

(c) Using needle–nose pliers, remove the oil seal.

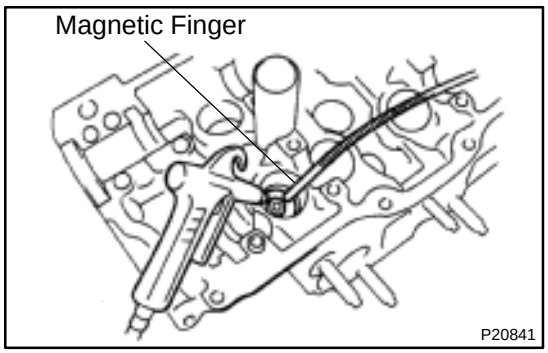

(d) Using compressed air and a magnetic finger, remove the spring seat by blowing air.

HINT:

Arrange the valves, valve springs, spring seats and spring retainers in the correct order.

EM104–02

DISASSEMBLY

1. **M/T:**
   REMOVE FLYWHEEL
2. **A/T:**
   REMOVE DRIVE PLATE
3. **REMOVE REAR END PLATE**
4. **INSTALL ENGINE TO ENGINE STAND FOR DISASSEMBLY**
5. **REMOVE TIMING BELT AND PULLEYS (See page EM–13)**
6. **REMOVE CYLINDER HEADS (See page EM–30)**

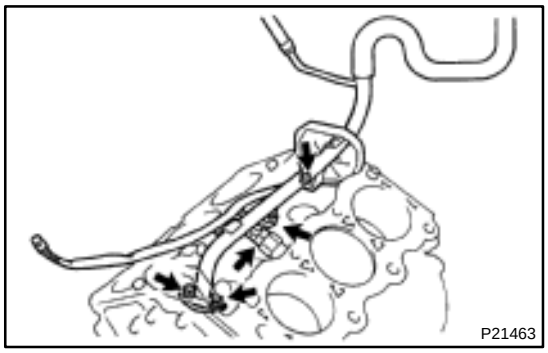
P21463

7. **REMOVE WATER BYPASS PIPE WITH KNOCK SENSOR WIRE**

(a) Disconnect the 2 knock sensor connectors.
(b) Remove the 2 bolts, nut and water bypass pipe with the knock sensor wire.

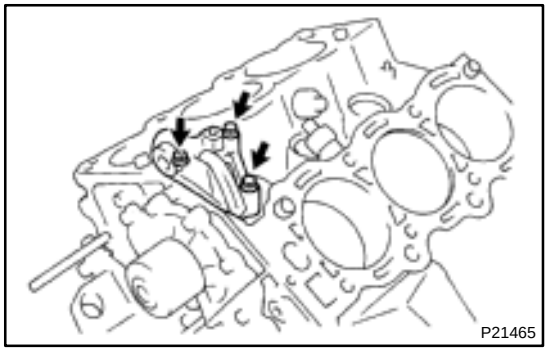
P21465

8. **REMOVE NO.2 IDLER PULLEY BRACKET**

Remove the 3 bolts and idler pulley bracket.

9. **REMOVE KNOCK SENSORS (See page SF–51)**
10. **REMOVE WATER PUMP (See page CO–6)**
11. **REMOVE GENERATOR ADJUSTING BAR**
12. **REMOVE OIL PRESSURE SWITCH**

Using SST, remove the oil pressure switch.

SST 09816–30010

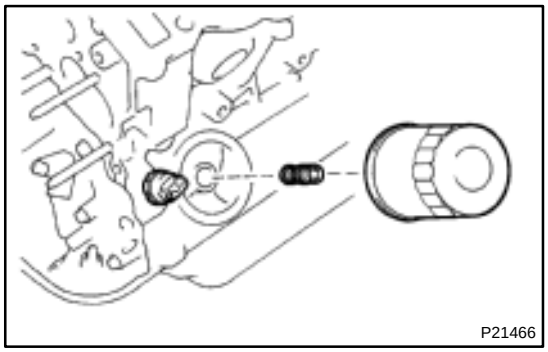
P21466

13. **REMOVE OIL FILTER (See page LU–2)**
14. **REMOVE OIL FILTER UNION**

Using a 12 mm hexagon wrench, remove the union.

15. **REMOVE RH AND LH ENGINE MOUNTING BRACKETS**
16. **REMOVE COOLANT DRAIN COCK**
17. **w/ Oil Cooler:**
    REMOVE OIL COOLER (See page LU–18)
18. **REMOVE OIL PUMP (See page LU–8)**

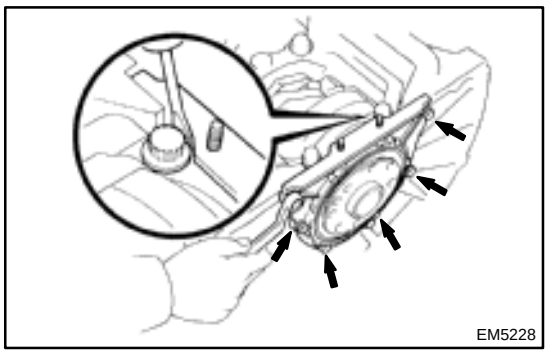

19. REMOVE REAR OIL SEAL RETAINER

(a) Remove the 6 bolts and retainer.

(b) Using a screwdriver, remove the oil seal retainer by plying the portions between the oil seal retainer and main bearing cap.

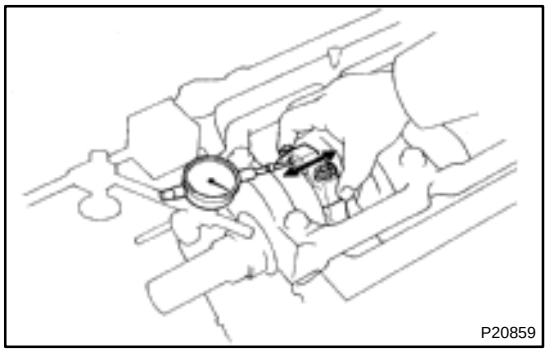

20. CHECK CONNECTING ROD THRUST CLEARANCE

Using a dial indicator, measure the thrust clearance while moving the connecting rod back and forth.

Standard thrust clearance:
0.150 – 0.330 mm (0.0059 – 0.0130 in.)
Maximum thrust clearance: 0.380 mm (0.0150 in.)

If the thrust clearance is greater than maximum, replace the connecting rod assembly. If necessary, replace the crankshaft.

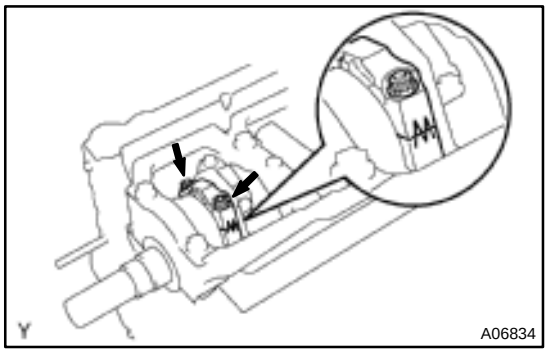

21. REMOVE CONNECTING ROD CAPS AND CHECK OIL CLEARANCE

(a) Check the matchmarks on the connecting rod and cap are aligned to ensure correct order.

(b) Remove the 2 connecting rod cap nuts.

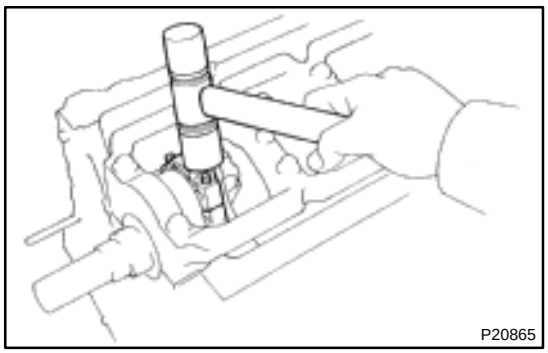

(c) Using a plastic–faced hammer, lightly tap the connecting rod bolts and lift off the connecting rod cap.

HINT:

Keep the lower bearing inserted with the connecting rod cap.

(d) Cover the connecting rod bolts with a short piece of hose to protect the crankshaft from damage.

(e) Clean the crank pin and bearing.

(f) Check the crank pin and bearing for pitting and scratches.

If the crank pin or bearing is damaged, replace the bearings. If necessary, grind or replace the crankshaft.

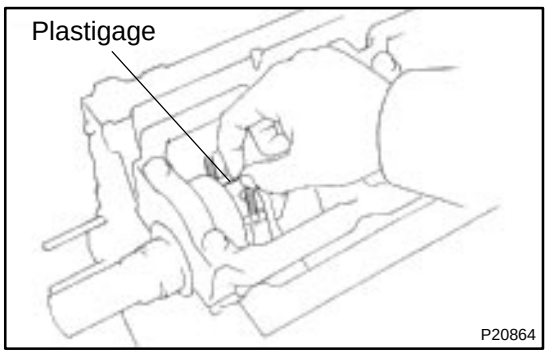

(g) Lay a strip of Plastigage across the crank pin.

(h) Install the connecting rod cap with the 2 nuts.
(See page EM–100)

NOTICE:

Do not turn the crankshaft.

(i) Remove the 2 nuts and connecting rod cap.
(See step (b) and (c) above)

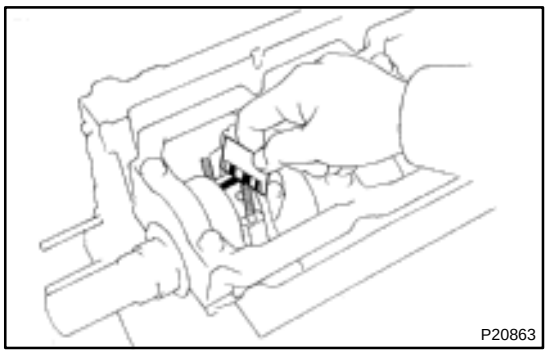

(j) Measure the Plastigauge at its widest point.

Standard oil clearance:

STD	0.024 – 0.053 mm (0.0009 – 0.0021 in.)
U/S 0.25	0.023 – 0.069 mm (0.0009 – 0.0027 in.)

Maximum oil clearance: 0.08 mm (0.0031 in.)

If the oil clearance is greater than maximum, replace the bearings. If necessary, grind or replace the crankshaft.

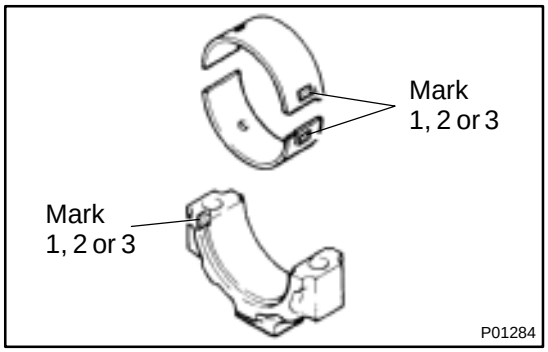

HINT:

If using a standard bearing, replace with one having the same number marked on the connecting rod cap. There are 3 sizes of standard bearings, marked ”1”, ”2” and ”3” accordingly.

Reference

Standard bearing center wall thickness:

Mark ”1”	1.484 – 1.488 mm (0.0584 – 0.0586 in.)
Mark ”2”	1.488 – 1.492 mm (0.0586 – 0.0587 in.)
Mark ”3”	1.492 – 1.496 mm (0.0587 – 0.0589 in.)

(k) Completely remove the Plastigauge.

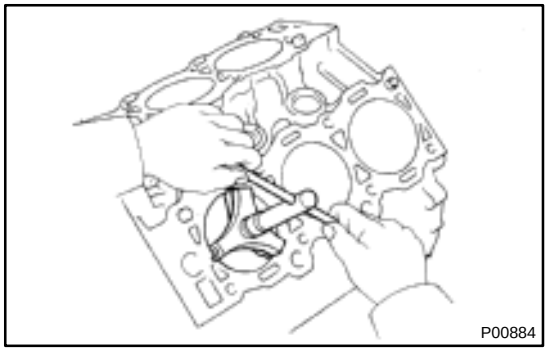

22. REMOVE PISTON AND CONNECTING ROD ASSEMBLIES

(a) Using a ridge reamer, remove the all carbon from the top of the cylinder.

(b) Cover the connecting rod bolts with a short piece of hose to protect the crankshaft from damage.

(c) Push the piston, connecting rod assembly and upper bearing through the top of the cylinder block.

HINT:

- Keep the bearings, connecting rod and cap together.
- Arrange the piston and connecting rod assemblies in correct order.

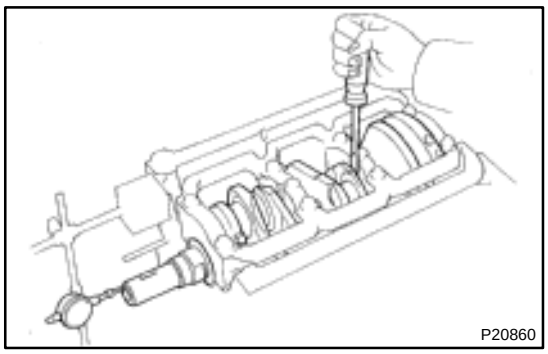

23. CHECK CRANKSHAFT THRUST CLEARANCE

Using a dial indicator, measure the thrust clearance while prying the crankshaft back and forth with a screwdriver.

Standard thrust clearance:
0.020 – 0.220 mm (0.0008 – 0.0087 in.)
Maximum thrust clearance: 0.300 mm (0.0118 in.)

If the thrust clearance is greater than maximum, replace the thrust washers as a set.

Thrust washer thickness:
2.440 – 2.490 mm (0.0961 – 0.0980 in.)

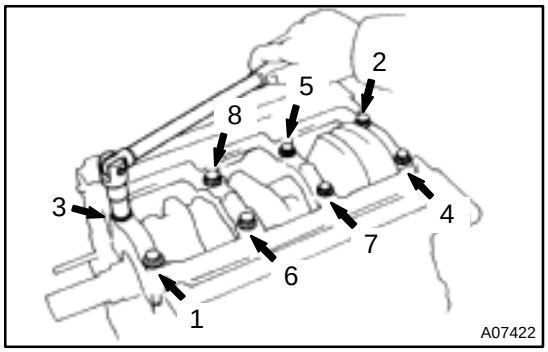

24. REMOVE MAIN BEARING CAP AND CHECK OIL CLEARANCE

(a) Uniformly loosen and remove the main bearing cap bolts, in several passes, in the sequence shown.

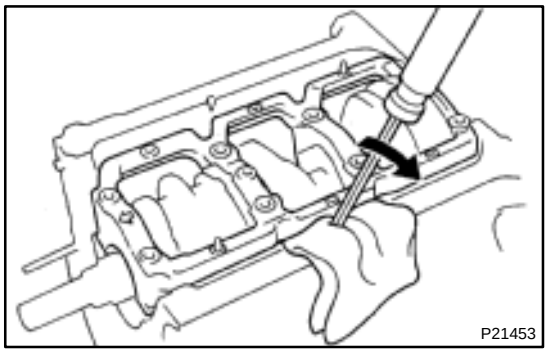

(b) Using a screwdriver, pry out the main bearing cap and remove the main bearing cap, lower main bearings and lower thrust washers (No.2 journal position of main bearing cap only).

HINT:
Keep the lower main bearings and lower thrust washers together with the main bearing cap.

(c) Lift out the crankshaft.

HINT:
Keep the upper main bearings and upper thrust washers together with the cylinder block.

(d) Clean each main journal and bearing.

(e) Check each main journal and bearing for pitting and scratches.

If the journal or bearing is damaged, replace the bearings. If necessary, grind or replace the crankshaft.

(f) Place the crankshaft on the cylinder block.

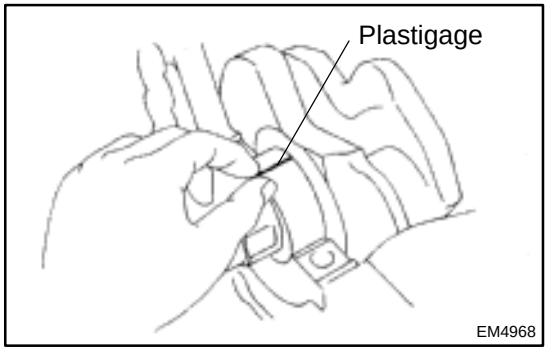

(g) Lay a strip of Plastigage across each journal.

(h) Install the main bearing cap with the 8 bolts.
(See page EM–100)

NOTICE:
Do not turn the crankshaft.

(i) Remove the 8 bolts and main bearing cap.
(See step (a) and (b) above)

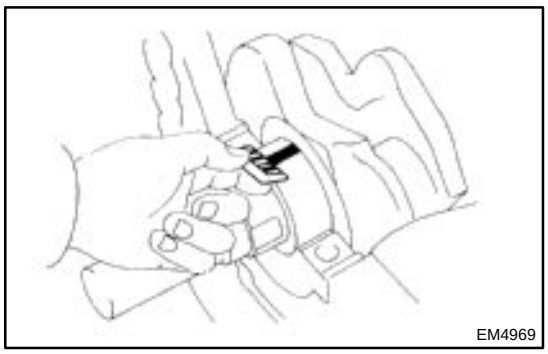
EM4969

(j) Measure the Plastigauge at its widest point.

Standard clearance:

No.1	STD	0.020 – 0.038 mm (0.0008 – 0.0015 in.)
	U/S 0.25	0.019 – 0.059 mm (0.0007 – 0.0023 in.)
Others	STD	0.024 – 0.042 mm (0.0009 – 0.0017 in.)
	U/S 0.25	0.023 – 0.063 mm (0.0009 – 0.0025 in.)

Maximum clearance: 0.08 mm (0.0031 in.)

HINT:

If replacing the cylinder block subassembly, the bearing standard clearance will be:

No.1	0.010 – 0.049 mm (0.0004 – 0.0020 in.)
Others	0.014 – 0.053 mm (0.0006 – 0.0021 in.)

If the oil clearance is greater than maximum, replace the bearings. If necessary, grind or replace the crankshaft.

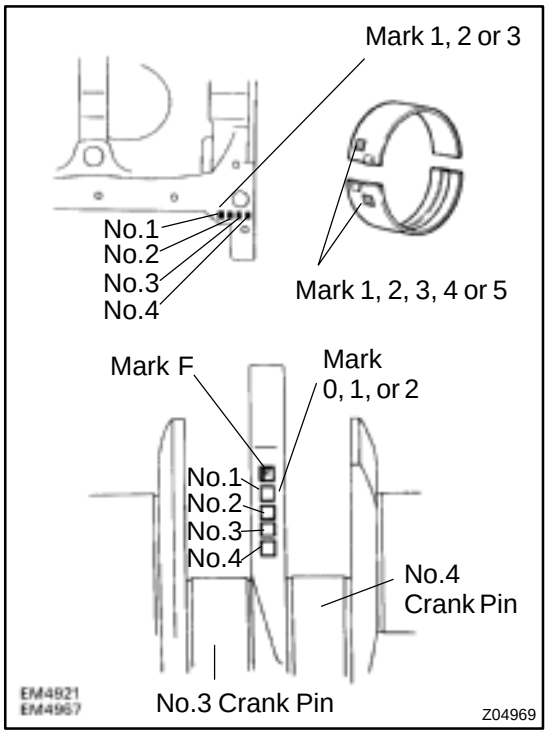

HINT:

If using a standard bearing, replace with one having the same number. If the number of the bearing cannot be determined, select the correct bearing by adding together the numbers imprinted on the cylinder block and crankshaft, then selecting the bearing with the same number as the total. There are 5 sizes of standard bearings, marked ”1”, ”2”, ”3”, ”4” and ”5” accordingly.

	Number marked								
Cylinder block	1			2			3		
Crankshaft	0	1	2	0	1	2	0	1	2
Use bearing	1	2	3	2	3	4	3	4	5

EXAMPLE: Cylinder block ”2” + Crankshaft ”1”
= Total number 3 (Use bearing ”3”)

Reference

Standard sized bearing center wall thickness:

No.1	Mark "1"	1.991 – 1.994 mm (0.0784 – 0.0785 in.)
	Mark "2"	1.994 – 1.997 mm (0.0785 – 0.0786 in.)
	Mark "3"	1.997 – 2.000 mm (0.0786 – 0.0787 in.)
	Mark "4"	2.000 – 2.003 mm (0.0787 – 0.0789 in.)
	Mark "5"	2.003 – 2.006 mm (0.0789 – 0.0790 in.)
Others	Mark "1"	1.989 – 1.992 mm (0.0783 – 0.0784 in.)
	Mark "2"	1.992 – 1.995 mm (0.0784 – 0.0785 in.)
	Mark "3"	1.995 – 1.998 mm (0.0785 – 0.0787 in.)
	Mark "4"	1.998 – 2.001 mm (0.0787 – 0.0788 in.)
	Mark "5"	2.001 – 2.004 mm (0.0788 – 0.0789 in.)

Cylinder block main journal bore diameter:

Mark "1"	68.010 – 68.016 mm (2.6776 – 2.6778 in.)
Mark "2"	68.016 – 68.022 mm (2.6778 – 2.6780 in.)
Mark "3"	68.022 – 68.028 mm (2.6780 – 2.6783 in.)

Crankshaft main journal diameter:

Mark "0"	63.996 – 64.000 mm (2.5195 – 2.5197 in.)
Mark "1"	63.990 – 63.996 mm (2.5193 – 2.5195 in.)
Mark "2"	63.985 – 63.990 mm (2.5191 – 2.5193 in.)

(k) Completely remove the Plastigauge.

25. REMOVE CRANKSHAFT

(a) Lift out the crankshaft.

(b) Remove the upper main bearings and upper thrust washers from the cylinder block.

HINT:

Arrange the main bearings and thrust washers in correct order.

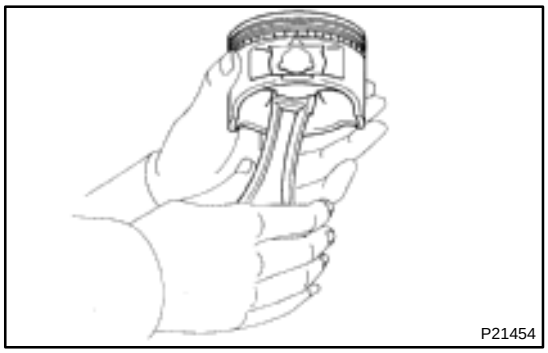

26. CHECK FIT BETWEEN PISTON AND PISTON PIN

Try to move the piston back and forth on the piston pin.

If any movement is felt, replace the piston and pin as a set.

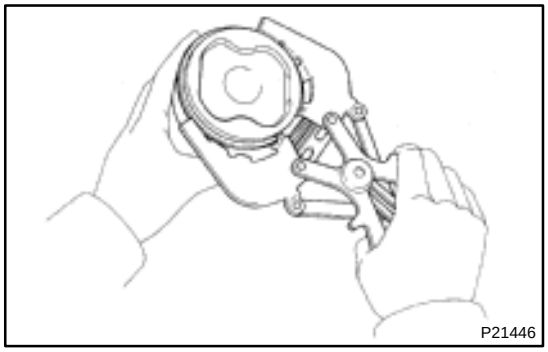

27. REMOVE PISTON RINGS

(a) Using a piston ring expander, remove the 2 compression rings.

(b) Remove the 2 side rails and oil ring by hand.

HINT:

Arrange the piston rings in the correct order only.

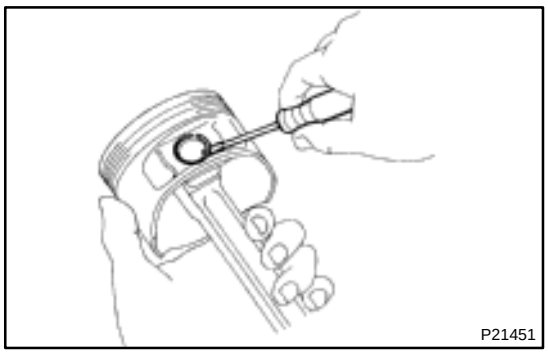

28. DISCONNECT CONNECTING ROD FROM PISTON

(a) Using a small screwdriver, pry out the 2 snap rings.

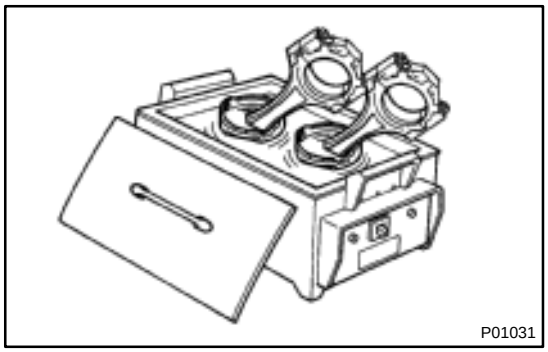

(b) Gradually heat the piston to about 60˚C (140˚F).

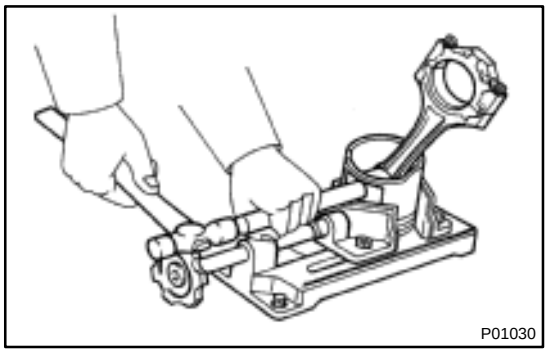

(c) Using a plastic–faced hammer and brass bar, lightly tap out the piston pin and remove the connecting rod.

HINT:

- The piston and pin are a matched set.
- Arrange the pistons, pins, rings, connecting rods and bearings in the correct order.

COMPRESSION

INSPECTION

EM01D–07

HINT:

If there is lack of power, excessive oil consumption or poor fuel economy, measure the compression pressure.

1. WARM UP AND STOP ENGINE

Allow the engine to warm up to normal operating temperature.

2. REMOVE SPARK PLUGS (See page IG–1)

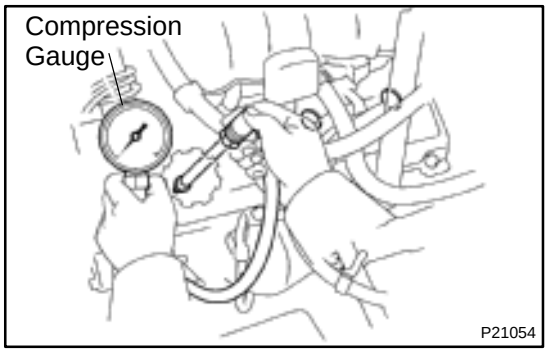

3. CHECK CYLINDER COMPRESSION PRESSURE

(a) Insert a compression gauge into the spark plug hole.

(b) Fully open the throttle.

(c) While cranking the engine, measure the compression pressure.

HINT:

Always use a fully charged battery to obtain engine speed of 250 rpm or more.

(d) Repeat steps (a) through (c) for each cylinder.

NOTICE:

This measurement must be done in as short a time as possible.

Compression pressure:
1,200 kPa (12.2 kgf/cm^2, 174 psi) or more
Minimum pressure:
1,000 kPa (10.2 kgf/cm^2, 145 psi)
Difference between each cylinder:
100 kPa (1.0 kgf/cm^2, 15 psi) or less

(e) If the cylinder compression in 1 or more cylinders is low, pour a small amount of engine oil into the cylinder through the spark plug hole and repeat steps (a) through (c) for cylinders with low compression.

- If adding oil helps the compression, it is likely that the piston rings and/or cylinder bore are worn or damaged.
- If pressure stays low, a valve may be sticking or seating is improper, or there may be leakage past the gasket.

4. REINSTALL SPARK PLUGS (See page IG–1)

CO/HC

INSPECTION

EM03L–06

HINT:

This check is used only to determine whether or not the idle CO/HC complies with regulations.

1. INITIAL CONDITIONS

(a) Engine at normal operating temperature
(b) Air cleaner installed
(c) All pipes and hoses of air induction system connected
(d) All accessories switched OFF
(e) All vacuum lines properly connected
(f) SFI system wiring connectors fully plugged
(g) Ignition timing checked correctly
(h) Transmission in neutral position
(i) Tachometer and CO/HC meter calibrated by hand

2. START ENGINE

3. RACE ENGINE AT 2,500 RPM FOR APPROX. 180 SECONDS

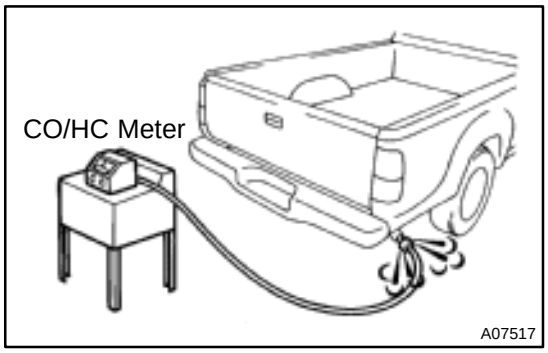

4. INSERT CO/HC METER TESTING PROBE AT LEAST 40 cm (1.3 ft) INTO TAILPIPE DURING IDLING

5. IMMEDIATELY CHECK CO/HC CONCENTRATION AT IDLE AND/OR 2,500 RPM

Complete the measuring within 3 minutes.

HINT:

When doing the 2 mode (2,500 rpm and idle) test, follow the measurement order prescribed by the applicable local regulations

If the CO/HC concentration does not comply with regulations, troubleshoot in the order given below.

(1) Check the A/F sensor or heated oxygen sensor operation (See pages DI–234 or DI–243).
(2) See the table below for possible causes, and then inspect and correct the applicable causes if necessary.

CO	HC	Symptoms	Causes
Normal	High	Rough idle	3. Faulty ignition: • Incorrect timing • Fouled, shorted or improperly gapped plugs • Open or crossed high–tension cords 4. Incorrect valve clearance 5. Leaky intake and exhaust valves 6. Leaky cylinder
Low	High	Rough idle (Fluctuating HC reading)	1. Vacuum leak: • PCV hose • Intake manifold • Air intake chamber • Intake air connector • Throttle body • IAC valve • Brake booster line 2. Lean mixture causing misfire
High	High	Rough idle (Black smoke from exhaust)	1. Restricted air filter 2. Plugged PCV valve 3. Faulty SFI systems: • Faulty fuel pressure regulator • Clogged fuel return line • Defective ECT sensor • Faulty ECM • Faulty injector • Faulty throttle position sensor • Faulty MAF meter

VALVE CLEARANCE

INSPECTION

EM01E–09

HINT:

Inspect and adjust the valve clearance when the engine is cold.

1. REMOVE INTAKE AIR CONNECTOR
(See page EM–30)

2. REMOVE CYLINDER HEAD COVERS
(See page EM–30)

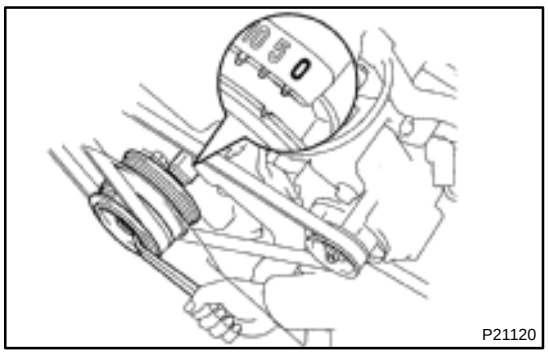

3. SET NO.1 CYLINDER TO TDC/COMPRESSION

(a) Turn the crankshaft pulley, and align its groove with timing mark ”0” of the No.1 timing belt cover.

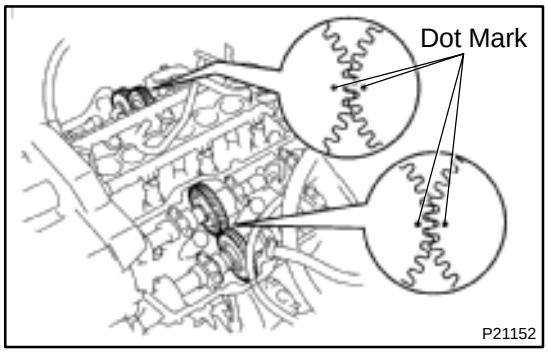

(b) Check that the timing marks (1 dot) of the camshaft drive and driven gears are in straight line on the cylinder heads surface as shown in the illustration.

If not, turn the crankshaft 1 revolution (360˚) and align the marks.

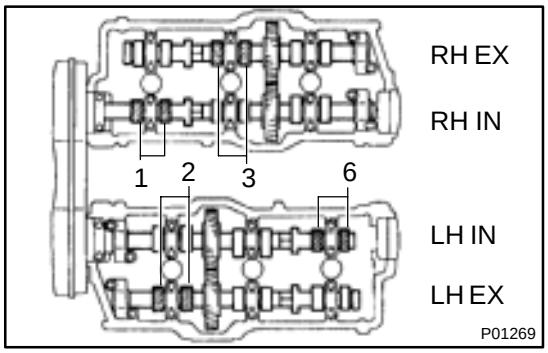

4. INSPECT VALVE CLEARANCE

(a) Check only the valves indicated in the illustration.

(1) Using a feeler gauge, measure the clearance between the valve lifter and camshaft.

(2) Record out of specification valve clearance measurements. They will be used later to determine the required replacement adjusting shim.

Valve clearance (Cold):

Intake	0.13 – 0.23 mm (0.006 – 0.009 in.)
Exhaust	0.27 – 0.37 mm (0.011 – 0.014 in.)

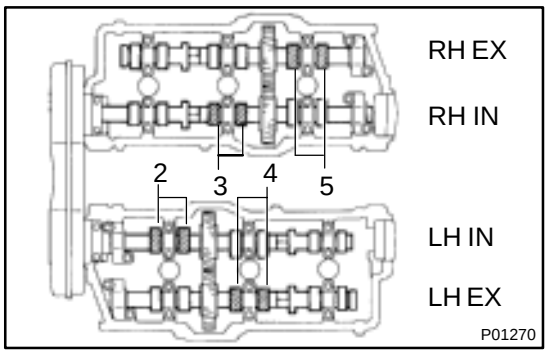

(b) Turn the crankshaft 2/3 of a revolution (240˚), and check only the valves indicated in the illustration. Measure the valve clearance (See step (a)).

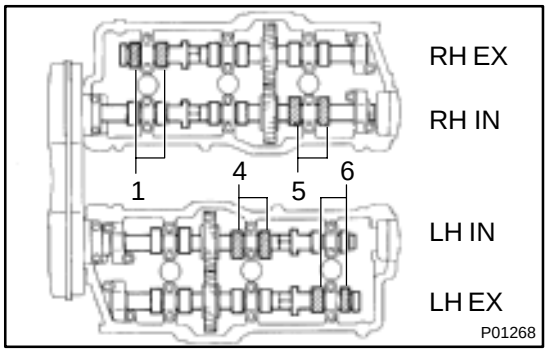

(c) Turn the crankshaft a further 2/3 of a revolution (240˚), and check only the valves indicated in the illustration. Measure the valve clearance (See step (a)).

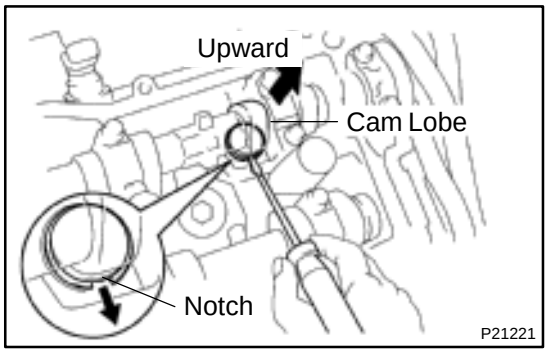

5. ADJUST VALVE CLEARANCE

(a) Remove the adjusting shim.

(1) Turn the camshaft so that the cam lobe for the valve to be adjusted faces up.

(2) Turn the valve lifter with a screwdriver so that the notches are perpendicular to the camshaft.

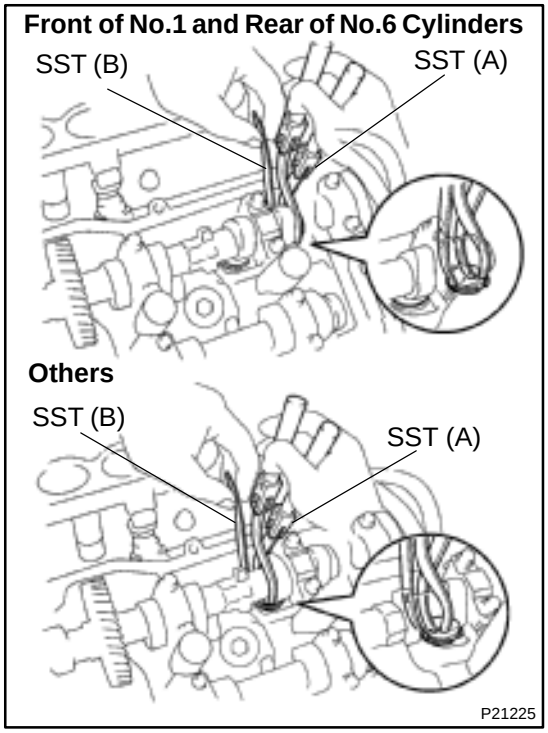

(3) Using SST (A), press down the valve lifter and place SST (B) between the camshaft and valve lifter. Remove SST (A).

SST 09248–55040 (09248–05410, 09248–05420)

HINT:

- Apply SST (B) at a slight angle on the side marked with ”9” or ”7”, at the position shown in the illustration.
- When SST (B) is inserted too deeply, it will get pinched by the shim. To prevent it from being stuck, insert it gently from the intake side, at a slight angle.

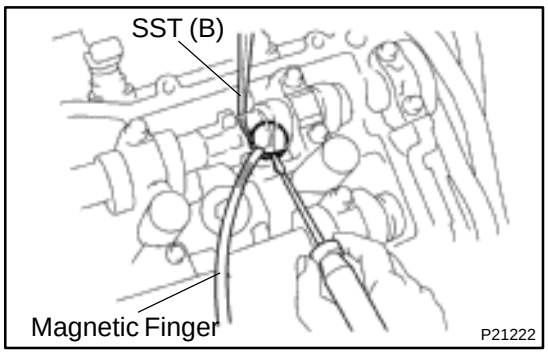

(4) Using a small screwdriver and magnetic finger, remove the adjusting shim.

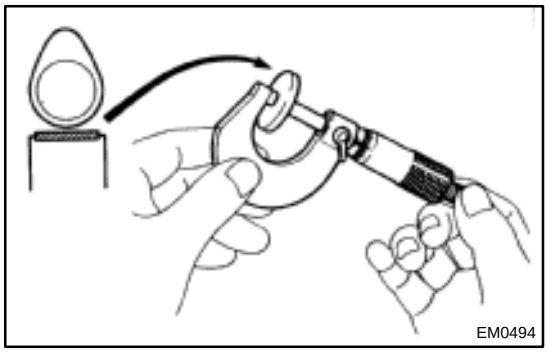

(b) Determine the replacement adjusting shim size by following the Formula or Charts:

(1) Using a micrometer, measure the thickness of the removed shim.

(2) Calculate the thickness of a new shim so the valve clearance comes within the specified value.

T ..... Thickness of used shim
A ..... Measured valve clearance
N ..... Thickness of new shim
Intake: N = T + (A – 0.18 mm (0.007 in.))
Exhaust: N = T + (A – 0.32 mm (0.013 in.))

(3) Select a new shim with a thickness as close as possible to the calculated values.

HINT:
Shims are available in 17 sizes in increments of 0.050 mm (0.0020 in.), from 2.500 mm (0.0984 in.) to 3.300 mm (0.1299 in.).

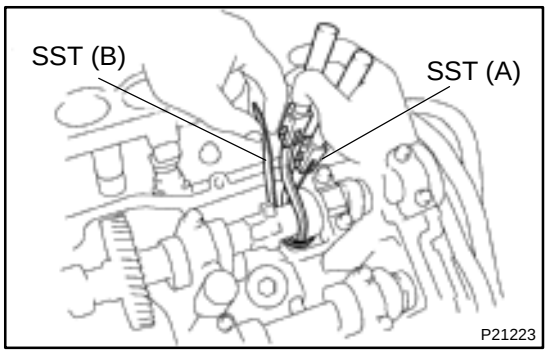

(c) Install a new adjusting shim.

(1) Place a new adjusting shim on the valve lifter, with imprinted numbers facing down.

(2) Using SST (A), press down the valve lifter and remove SST (B).

SST 09248–55040 (09248–05410, 09248–05420)

(d) Recheck the valve clearance.

6. REINSTALL CYLINDER HEAD COVERS (See page EM–51)

7. REINSTALL INTAKE AIR CONNECTOR (See page EM–51)

Adjusting Shim Selection Chart (Intake)

| Measured clearance mm (in.) \ Installed shim thickness mm (in.) | 2.500 (0.0984) | 2.520 (0.0992) | 2.540 (0.1000) | 2.550 (0.1004) | 2.560 (0.1008) | 2.580 (0.1016) | 2.600 (0.1024) | 2.620 (0.1031) | 2.640 (0.1039) | 2.650 (0.1043) | 2.660 (0.1047) | 2.670 (0.1051) | 2.680 (0.1055) | 2.690 (0.1059) | 2.700 (0.1063) | 2.710 (0.1067) | 2.720 (0.1071) | 2.730 (0.1075) | 2.740 (0.1079) | 2.750 (0.1083) | 2.760 (0.1087) | 2.770 (0.1091) | 2.780 (0.1094) | 2.790 (0.1098) | 2.800 (0.1102) | 2.810 (0.1106) | 2.820 (0.1110) | 2.830 (0.1114) | 2.840 (0.1118) | 2.850 (0.1122) | 2.860 (0.1126) | 2.870 (0.1130) | 2.880 (0.1134) | 2.890 (0.1138) | 2.900 (0.1142) | 2.910 (0.1146) | 2.920 (0.1150) | 2.930 (0.1154) | 2.940 (0.1157) | 2.950 (0.1161) | 2.960 (0.1165) | 2.970 (0.1169) | 2.980 (0.1173) | 2.990 (0.1177) | 3.000 (0.1181) | 3.010 (0.1185) | 3.020 (0.1189) | 3.030 (0.1193) | 3.040 (0.1197) | 3.050 (0.1201) | 3.060 (0.1205) | 3.070 (0.1209) | 3.080 (0.1213) | 3.090 (0.1217) | 3.100 (0.1220) | 3.120 (0.1228) | 3.140 (0.1236) | 3.150 (0.1240) | 3.160 (0.1244) | 3.180 (0.1252) | 3.200 (0.1260) | 3.220 (0.1268) | 3.240 (0.1276) | 3.250 (0.1280) | 3.260 (0.1283) | 3.280 (0.1291) | 3.300 (0.1299) |
|---|---|---

Adjusting Shim Selection Chart (Exhaust)

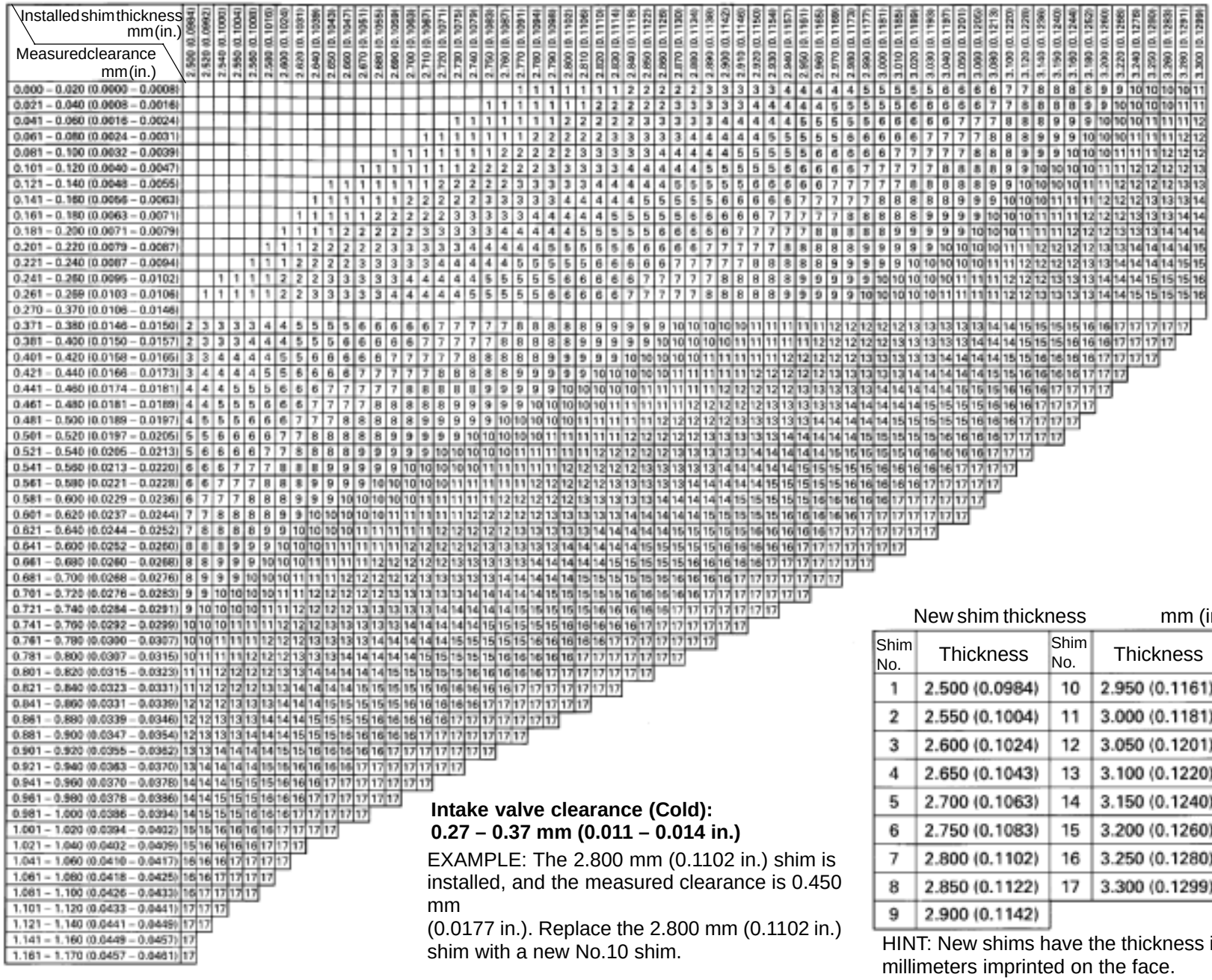

Intake valve clearance (Cold):
0.27 – 0.37 mm (0.011 – 0.014 in.)

EXAMPLE: The 2.800 mm (0.1102 in.) shim is installed, and the measured clearance is 0.450 mm
(0.0177 in.). Replace the 2.800 mm (0.1102 in.) shim with a new No.10 shim.

New shim thickness mm (in.)

Shim No.	Thickness	Shim No.	Thickness
1	2.500 (0.0984)	10	2.950 (0.1161)
2	2.550 (0.1004)	11	3.000 (0.1181)
3	2.600 (0.1024)	12	3.050 (0.1201)
4	2.650 (0.1043)	13	3.100 (0.1220)
5	2.700 (0.1063)	14	3.150 (0.1240)
6	2.750 (0.1083)	15	3.200 (0.1260)
7	2.800 (0.1102)	16	3.250 (0.1280)
8	2.850 (0.1122)	17	3.300 (0.1299)
9	2.900 (0.1142)		

HINT: New shims have the thickness in millimeters imprinted on the face.

V06209

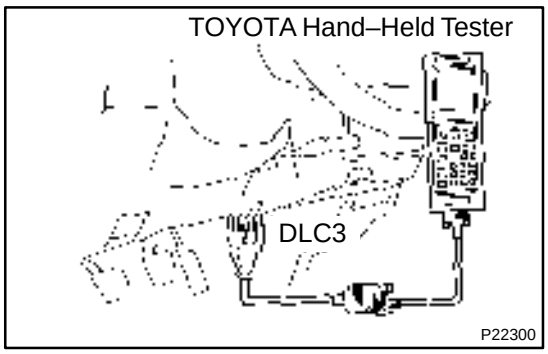

IGNITION TIMING

EM04H–03

INSPECTION

1. WARM UP ENGINE

Allow the engine to warm up to normal operating temperature.

2. CONNECT TOYOTA HAND–HELD TESTER OR OBDII SCAN TOOL

(a) Connect a TOYOTA hand–held tester or OBDII scan tool to the DLC3.

(b) Please refer to the TOYOTA hand–held tester or OBDII scan tool operator's manual for further details.

3. CONNECT TIMING LIGHT TO ENGINE

4. CHECK IDLE SPEED

(a) Race the engine speed at 1,000 rpm for approx. 5 seconds.

(b) Check the idle speed.

Idle speed:

700 ± 50 rpm (Transmission in neutral position and A/C OFF)

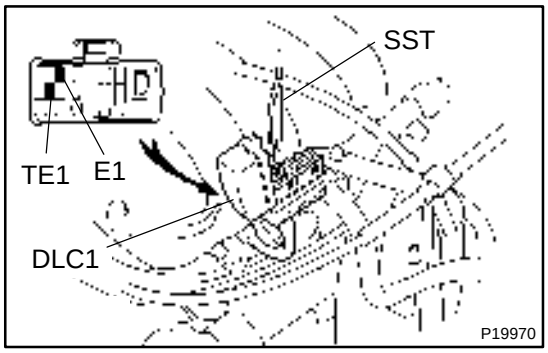

5. INSPECT IGNITION TIMING

(a) Using SST, connect terminals TE1 and E1 of the DLC1.
SST 09843–18020

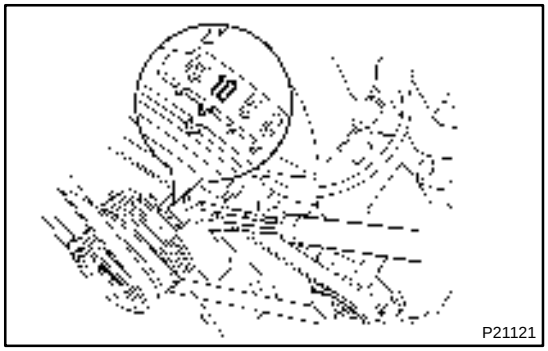

(b) Using a timing light, check the ignition timing.

Ignition timing:

8 – 12° BTDC @ idle (Transmission in neutral position)

(c) Remove the SST from the DLC1.
SST 09843–18020

6. FURTHER CHECK IGNITION TIMING

Ignition timing:

3 – 19° BTDC @ idle (Transmission in neutral position)

HINT:

The timing mark moves in a range between 3° and 19°.

7. DISCONNECT TIMING LIGHT FROM ENGINE

8. DISCONNECT TOYOTA HAND–HELD TESTER OR OBDII SCAN TOOL

IDLE SPEED

EM0ZS–01

INSPECTION

1. INITIAL CONDITIONS

(a) Engine at normal operating temperature
(b) Air cleaner installed
(c) All pipes and hoses of air induction system connected
(d) All accessories switched OFF
(e) All vacuum lines properly connected
(f) SFI system wiring connectors fully plugged
(g) Ignition timing checked correctly
(h) Transmission in neutral position
(i) A/C switch is OFF

2. CONNECT TOYOTA HAND–HELD TESTER OR OBDII SCAN TOOL (See page EM–9)

3. INSPECT IDLE SPEED

(a) Race the engine speed at 1,000 rpm for approx. 5 seconds.
(b) Check the idle speed.

Idle speed: 700 ± 50 rpm

If the idle speed is not as specified, check the IAC valve and air intake system.

4. DISCONNECT TOYOTA HAND–HELD TESTER OR OBDII SCAN TOOL

EM01J–07

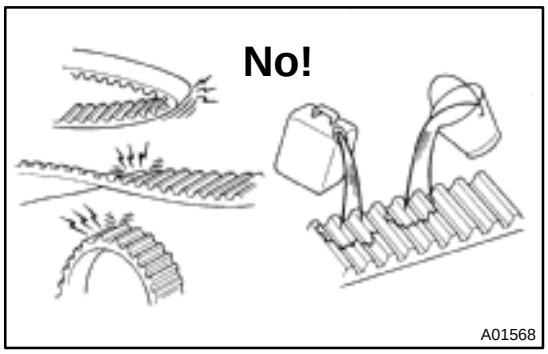

INSPECTION

1. INSPECT TIMING BELT

NOTICE:

- **Do not bend, twist or turn the timing belt inside out.**
- **Do not allow the timing belt to come into contact with oil, water or steam.**
- **Do not utilize timing belt tension when installing or removing the mount bolt of the camshaft timing pulley.**

If there are any defects, as shown in the illustrations, check these points:

(1) Premature parting
Check for proper installation.
Check the timing cover gasket for damage and proper installation.

(2) If the belt teeth are cracked or damaged, check to see if either camshaft is locked.

(3) If there is noticeable wear or cracks on the belt face, check to see if there are nicks on the side of the idler pulley lock and water pump.

(4) If there is wear or damage on only one side of the belt, check the belt guide and the alignment of each pulley.

(5) If there is noticeable wear on the belt teeth, check the timing cover for damage, correct gasket installation, and for foreign material on the pulley teeth.

If necessary, replace the timing belt.

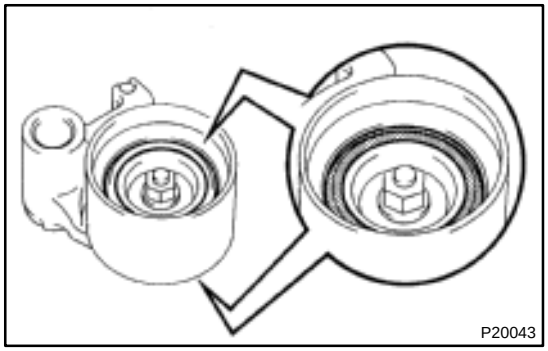

2. INSPECT IDLER PULLEYS

(a) Visually check the seal portion of the idler pulley for oil leakage.

If leakage is found, replace the idler pulley.

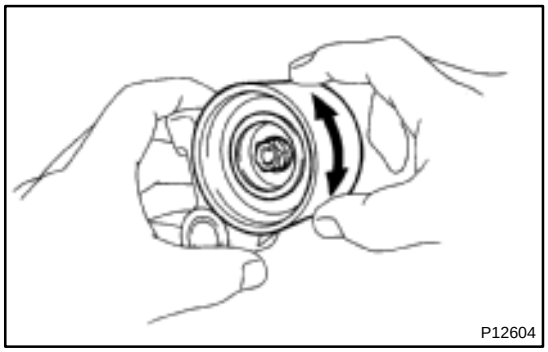

(b) Check that the idler pulley turns smoothly.

If necessary, replace the idler pulley.

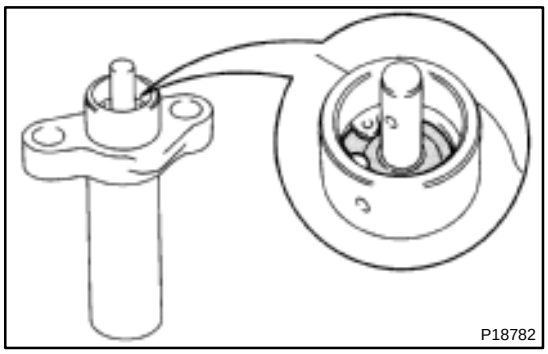

3. INSPECT TIMING BELT TENSIONER

(a) Visually check the seal portion of the tensioner for oil leakage.

HINT:

If there is only the faintest trace of oil on the seal on the push rod side, the tensioner is all right.

If leakage is found, replace the tensioner.

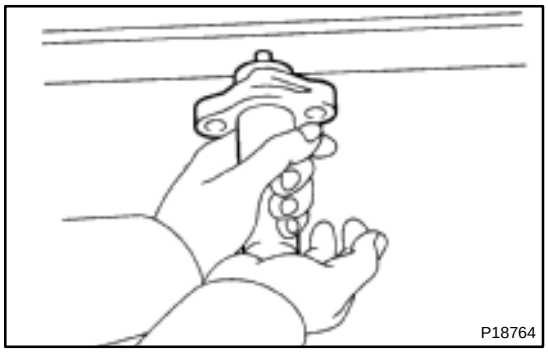

(b) Hold the tensioner with both hands and push the push rod strongly as shown to check that it doesn't move.

If the push rod moves, replace the tensioner.

NOTICE:

Never hold the tensioner push rod facing downward.

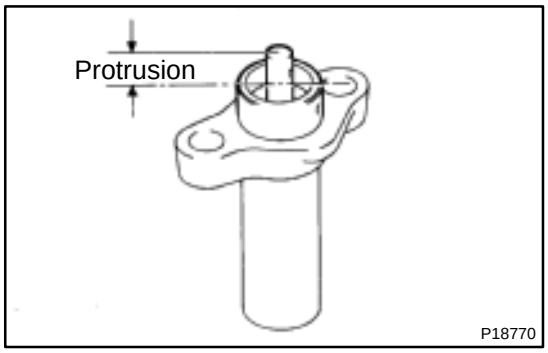

(c) Measure the protrusion of the push rod from the housing end.

Protrusion: 10.0 – 10.8 mm (0.394 – 0.425 in.)

If the protrusion is not as specified, replace the tensioner.

EM16E–01

INSPECTION

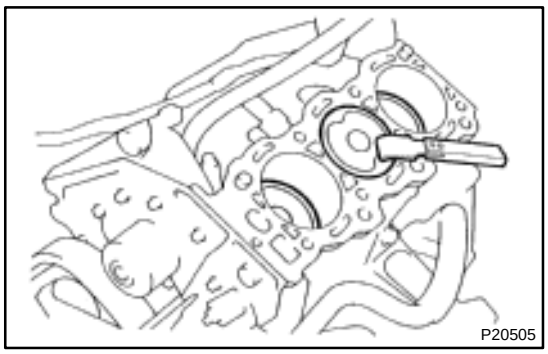

1. CLEAN TOP SURFACES OF PISTONS AND CYLINDER BLOCK

(a) Turn the crankshaft and bring each piston to top dead center (TDC). Using a gasket scraper, remove all the carbon from the piston top surfaces.

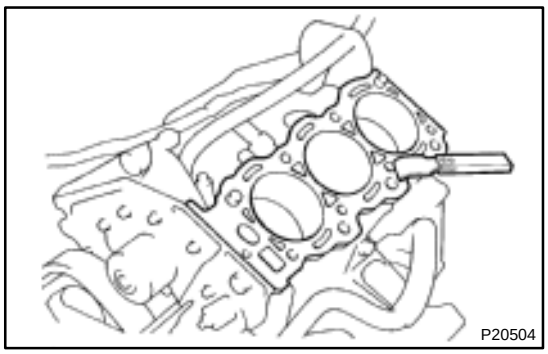

(b) Using a gasket scraper, remove all the gasket material from the cylinder block surfaces.

(c) Using compressed air, blow carbon and oil from the bolt holes.

CAUTION:

Protect your eyes when using high–compressed air.

2. INSPECT TOP SURFACE OF CYLINDER BLOCK FOR FLATNESS (See page EM–90)

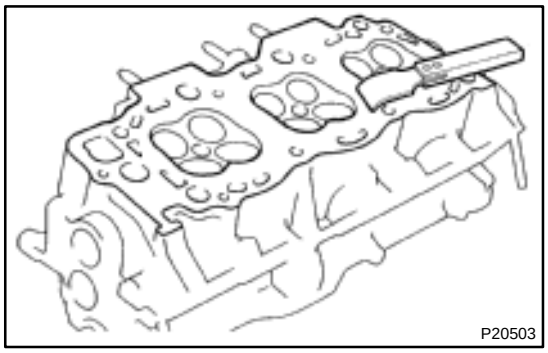

3. CLEAN CYLINDER HEAD

(a) Using a gasket scraper, remove all the gasket material from the cylinder block contact surface.

NOTICE:

Be careful not to scratch the cylinder block contact surfaces.

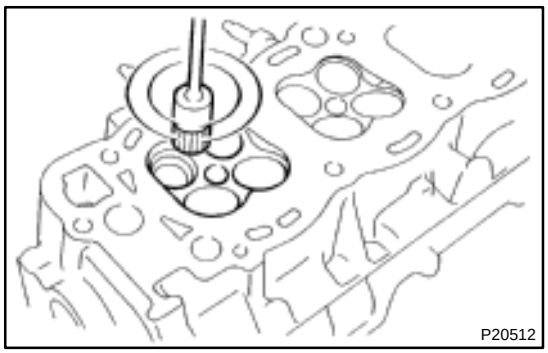

(b) Using a wire brush, remove all the carbon from the combustion chambers.

NOTICE:

Be careful not to scratch the cylinder block contact surfaces.

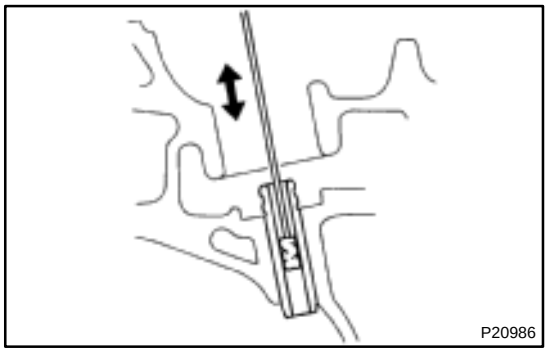

(c) Using a valve guide bushing brush and solvent, clean all the guide bushings.

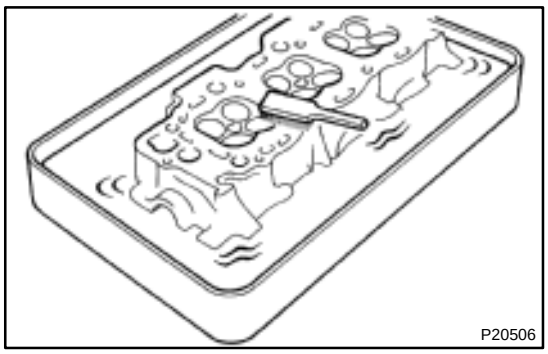

(d) Using a soft brush and solvent, thoroughly clean the cylinder heads.

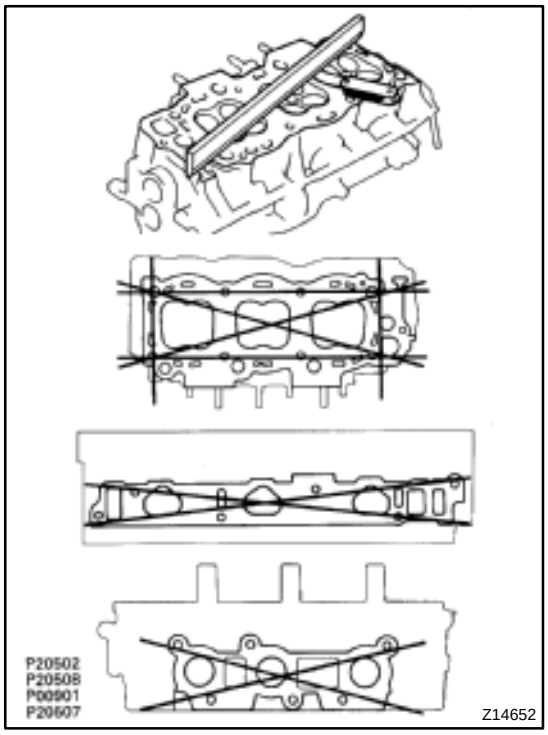

4. INSPECT CYLINDER HEAD

(a) Inspect for flatness.

Using a precision straight edge and feeler gauge, measure the surfaces contacting the cylinder block and manifolds for warpage.

Maximum warpage: 0.10 mm (0.0039 in.)

If warpage is greater than maximum, replace the cylinder head.

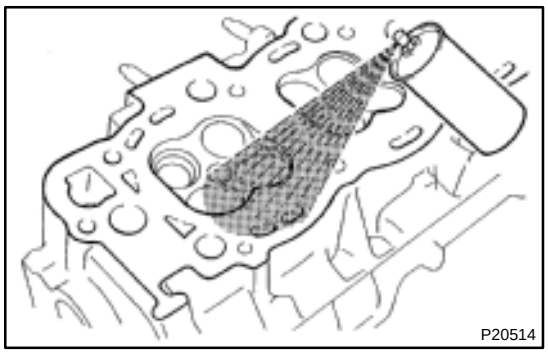

(b) Inspect for cracks.

Using a dye penetrant, check the combustion chamber, intake ports, exhaust ports and cylinder block surface for cracks.

If cracked, replace the cylinder head.

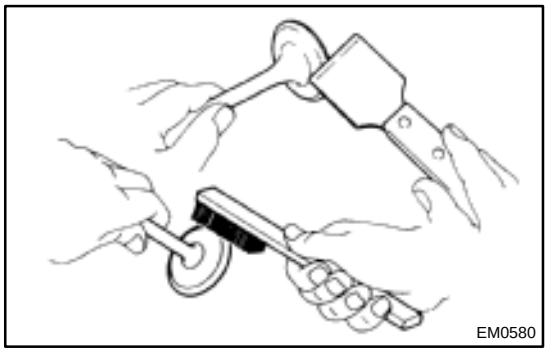

5. CLEAN VALVES

(a) Using a gasket scraper, chip off any carbon from the valve head.

(b) Using a wire brush, thoroughly clean the valve.

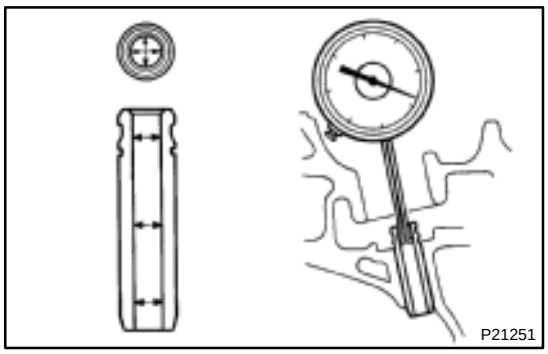

6. INSPECT VALVE STEMS AND GUIDE BUSHINGS

(a) Using a caliper gauge, measure the inside diameter of the guide busing.

Bushing inside diameter:
6.010 – 6.030 mm (0.2366 – 0.2374 in.)

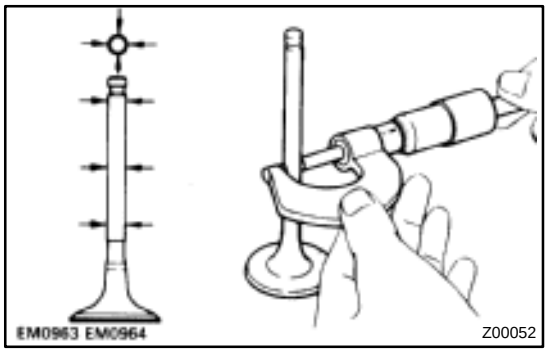

(b) Using a micrometer, measure the diameter of the valve stem.

Valve stem diameter:

Intake	5.970 – 5.985 mm (0.2350 – 0.2356 in.)
Exhaust	5.965 – 5.980 mm (0.2348 – 0.2354 in.)

(c) Subtract the valve stem diameter measurement from the guide bushing inside diameter measurement.

Standard oil clearance:

Intake	0.025 – 0.060 mm (0.0010 – 0.0024 in.)
Exhaust	0.030 – 0.065 mm (0.0012 – 0.0026 in.)

Maximum oil clearance:

Intake	0.08 mm (0.0031 in.)
Exhaust	0.10 mm (0.0039 in.)

If the clearance is greater than maximum, replace the valve and guide bushing. (Seepage EM–48)

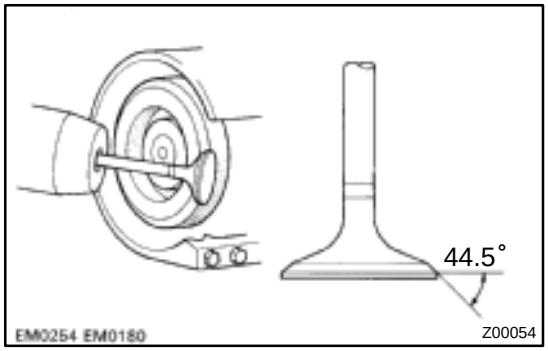

7. INSPECT AND GRIND VALVES

(a) Grind the valve enough to remove pits and carbon.

(b) Check that the valve is ground to the correct valve face angle.

Valve face angle: 44.5˚

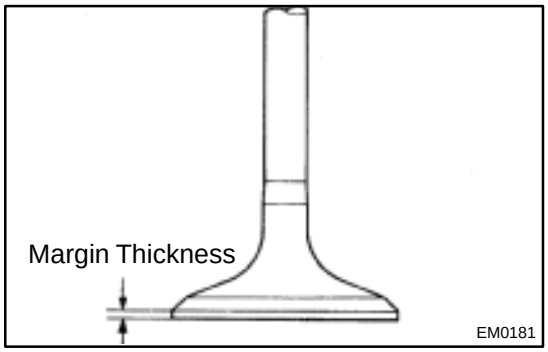

(c) Check the valve head margin thickness.

Standard margin thickness: 1.0 mm (0.039 in.)
Minimum margin thickness: 0.5 mm (0.020 in.)

If the margin thickness is less than the minimum, replace the valve.

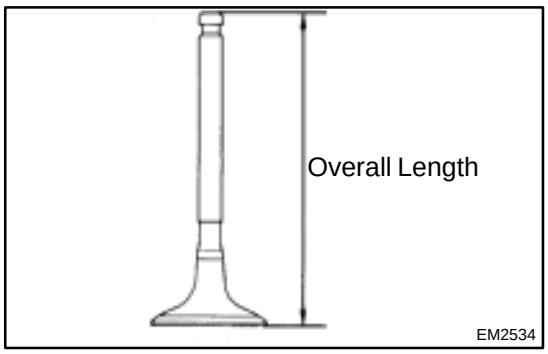

(d) Check the valve overall length.

Standard overall length:

Intake	95.15 mm (3.7461 in.)
Exhaust	94.90 mm (3.7362 in.)

Minimum overall length:

Intake	94.60 mm (3.7244 in.)
Exhaust	94.40 mm (3.7165 in.)

If the overall length is less than the minimum, replace the valve.

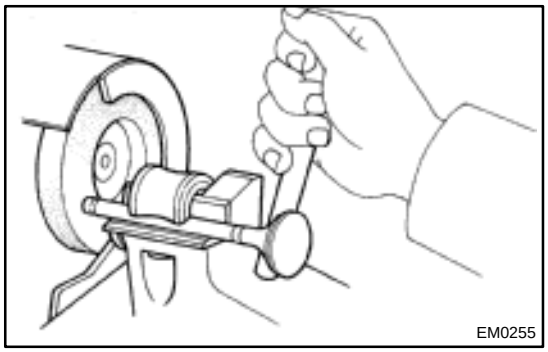

(e) Check the surface of the valve stem tip for wear.

If the valve stem tip is worn, resurface the tip with a grinder or replace the valve.

NOTICE:

Do not grind off more than the minimum.

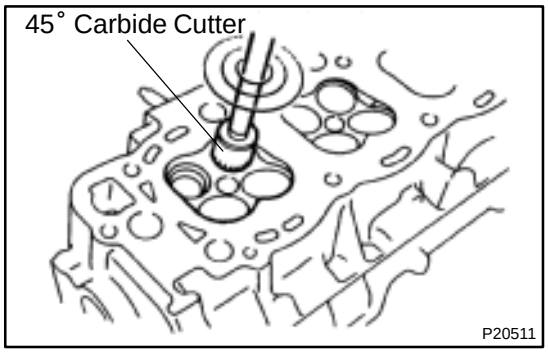

8. INSPECT AND CLEAN VALVE SEATS

(a) Using a 45˚ carbide cutter, resurface the valve seats. Remove only enough metal to clean the seats.

(b) Check the valve seating position.

Apply a light coat of prussian blue (or white lead) to the valve face. Lightly press the valve against the seat. Do not rotate the valve.

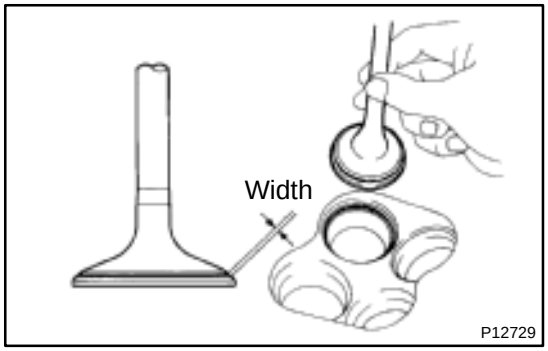

(c) Check the valve face and seat for the following:

- If blue appears 360˚ around the face, the valve is concentric. If not, replace the valve.
- If blue appears 360˚ around the valve seat, the guide and face are concentric. If not, resurface the seat.
- Check that the seat contact is in the middle of the valve face with these width.

1.0 – 1.4 mm (0.039 – 0.055 in.)

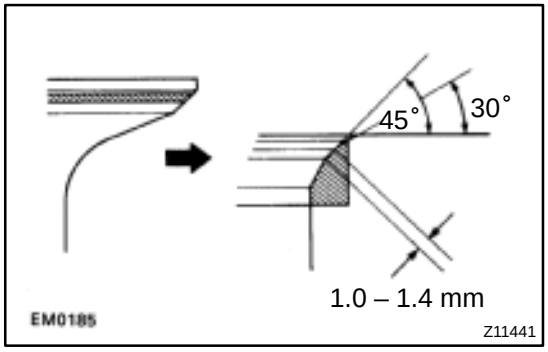

If not, correct the valve seats as follows:

(1) If the seating is too high on the valve face, use 30˚ and 45˚ cutters to correct the seat.

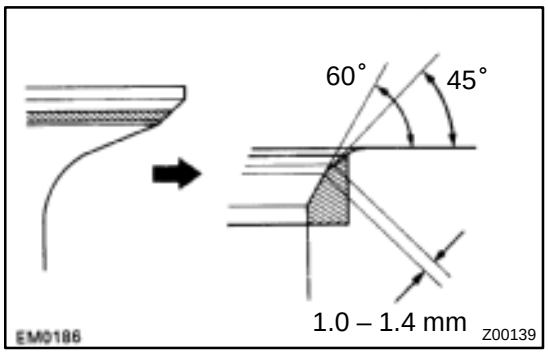

(2) If the seating is too low on the valve face, use 60° and 45° cutters to correct the seat.

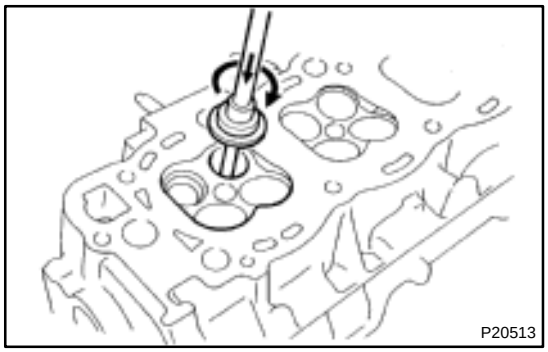

(d) Hand–lap the valve and valve seat with an abrasive compound.
(e) After hand–lapping, clean the valve and valve seat.

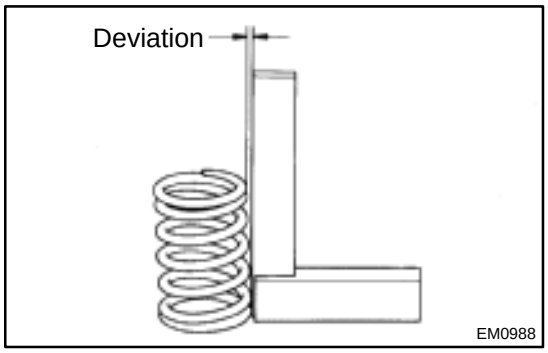

9. INSPECT VALVE SPRINGS

(a) Using a steel square, measure the squareness of the valve spring.

Maximum deviation: 2.0 mm (0.079 in.)

If deviation is greater than maximum, replace the valve spring.

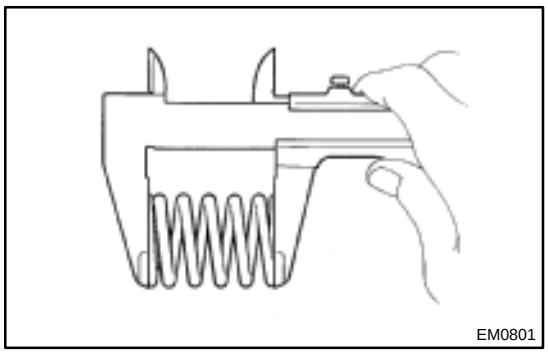

(b) Using vernier calipers, measure the free length of the valve spring.

Free length: 44.78 mm (1.7630 in.)

If the free length is not as specified, replace the valve spring.

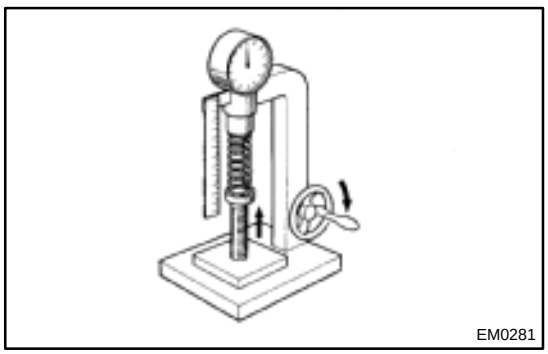

(c) Using a spring tester, measure the tension of the valve spring at the specified installed length.

Installed tension:
186 – 206 N (19.0 – 21.0 kgf, 41.9 – 46.3 lbf)
at 33.3 mm (1.311 in.)

If the installed tension is not as specified, replace the valve spring.

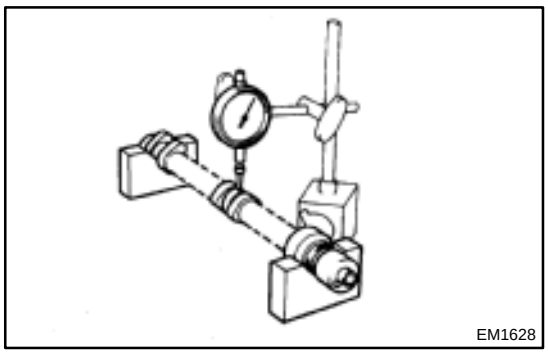
EM1628

10. INSPECT CAMSHAFTS

(a) Inspect the runout.

(1) Place the camshaft on V–blocks.

(2) Using a dial indicator, measure the circle runout at the center journal.

Maximum circle runout: 0.06 mm (0.0024 in.)

If the circle runout is greater than maximum, replace the camshaft.

Standard cam lobe height:

Intake	42.31 – 42.41 mm (1.6657 – 1.6697 in.)
Exhaust	41.96 – 42.06 mm (1.6520 – 1.6559 in.)

Minimum cam lobe height:

Intake	42.16 mm (1.6598 in.)
Exhaust	41.81 mm (1.6461 in.)

If the cam lobe height is less than minimum, replace the camshaft.

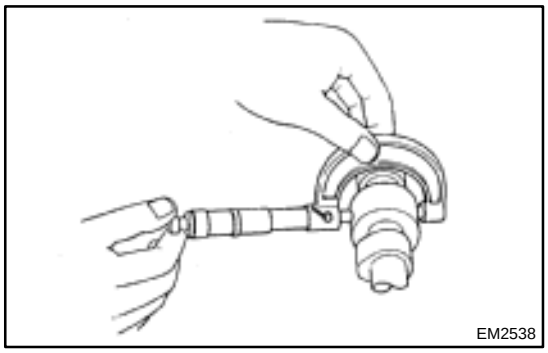
EM2538

(b) Using a micrometer, measure the journal diameter.

Journal diameter:

26.949 – 26.965 mm (1.0610 – 1.0616 in.)

If the journal diameter is not as specified, check the oil clearance.

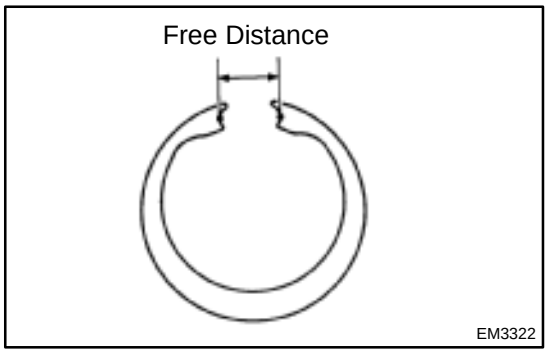

EM3322

(c) Using vernier calipers, measure the free distance between the spring end.

Free distance: 18.2 – 18.8 mm (0.712 – 0.740 in.)

If the free distance is not as specified, replace the gear spring.

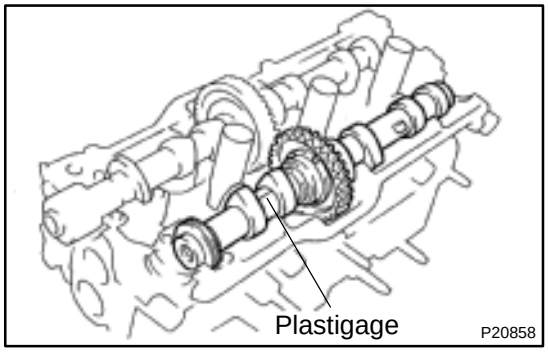

P20858

(d) Inspect the camshaft journal oil clearance.

(1) Clean the bearing caps and camshaft journals.

(2) Check the bearings for flaking and scoring.

If the bearings are damaged, replace the bearing caps and cylinder head as a set.

(3) Place the camshafts on the cylinder head.

(4) Lay a strip of Plastigage across each of the camshaft journals.

(5) Install the bearing caps. (See page EM–53)

NOTICE:
Do not turn the camshaft.

(6) Remove the bearing caps.

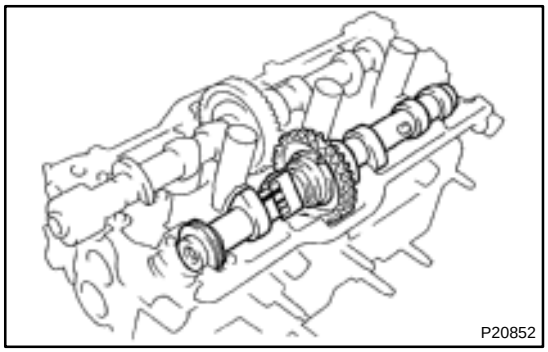
P20852

(7) Measure the Plastigage at its widest point.

Standard oil clearance:
0.035 – 0.072 mm (0.0014 – 0.0028 in.)
Maximum oil clearance: 0.10 mm (0.0039 in.)

If the oil clearance is greater than maximum, replace the camshaft. If necessary, replace the bearing caps and cylinder head as a set.

(8) Completely remove the Plastigage.

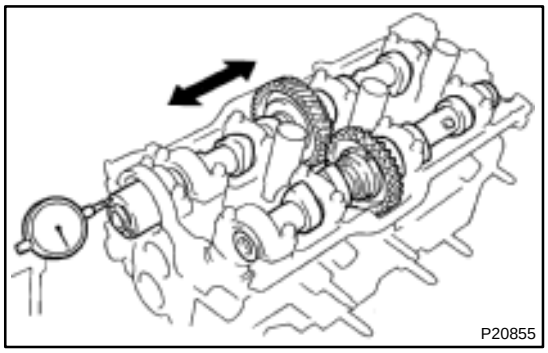
P20855

(e) Inspect the camshaft thrust clearance.
(1) Install the camshafts. (See page EM–4)
(2) Using a dial indicator, measure the thrust clearance while moving the camshaft back and forth.

Standard thrust clearance:
0.033 – 0.080 mm (0.0013 – 0.0031 in.)
Maximum thrust clearance: 0.12 mm (0.0047 in.)

If the thrust clearance is greater than maximum, replace the camshaft. If necessary, replace the bearing caps and cylinder head as a set.

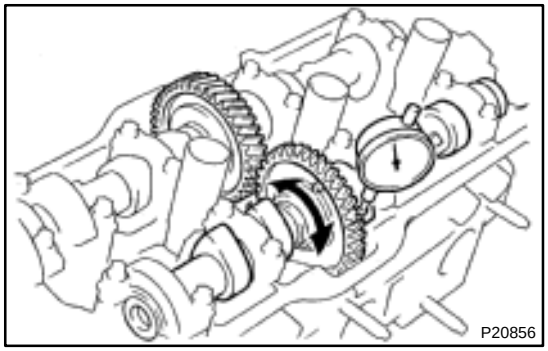
P20856

(f) Inspect the camshaft gear backlash.
(1) Install the camshafts without installing the exhaust camshaft sub–gear. (See page EM–4)
(2) Using a dial indicator, measure the backlash.

Standard backlash:
0.020 – 0.200 mm (0.0008 – 0.0079 in.)
Maximum backlash: 0.30 mm (0.0188 in.)

If the backlash is greater than maximum, replace the camshafts.

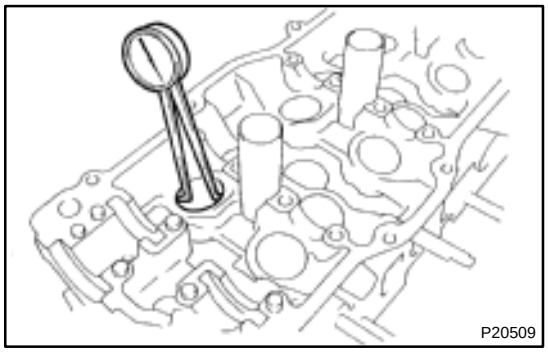
P20509

11. INSPECT VALVE LIFTERS AND LIFTER BORES

(a) Using a caliper gauge, measure the lifter bore diameter of the cylinder head.

Lifter bore diameter:
31.000 – 31.018 mm (1.2205 – 1.2212 in.)

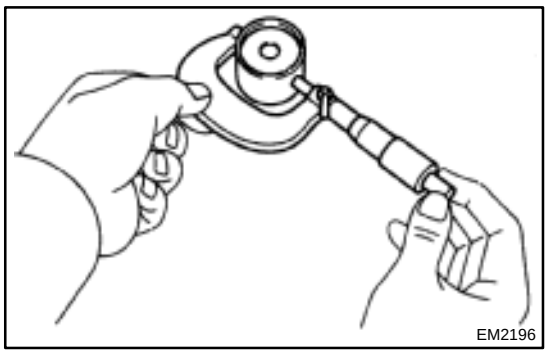
EM2196

(b) Using a micrometer, measure the lifter diameter.
Lifter diameter:
30.966 – 30.976 mm (1.2191 – 1.2195 in.)

(c) Subtract the lifter diameter measurement from the lifter bore diameter measurement.
Standard oil clearance:
0.024 – 0.052 mm (0.0009 – 0.0020 in.)
Maximum oil clearance: 0.08 mm (0.0031 in.)

If the oil clearance is greater than maximum, replace the lifter. If necessary, replace the cylinder head.

12. INSPECT INTAKE MANIFOLD

Using a precision straight edge and feeler gauge, measure the surfaces contacting the cylinder head and intake air connector for warpage.

Maximum warpage: 0.10 mm (0.0039 in.)

If warpage is greater than maximum, replace the intake manifold.

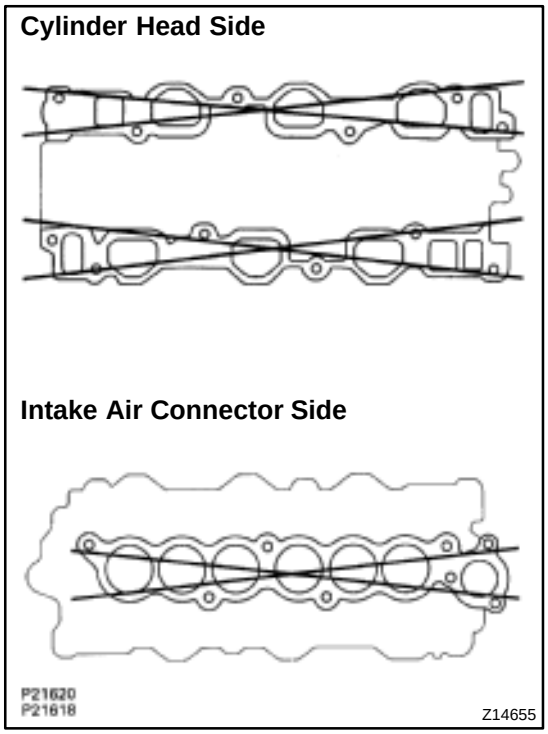

13. INSPECT EXHAUST MANIFOLDS

Using a precision straight edge and feeler gauge, measure the surfaces contacting the cylinder head for warpage.

Maximum warpage: 1.00 mm (0.0394 in.)

If warpage is greater than maximum, replace the exhaust manifold.

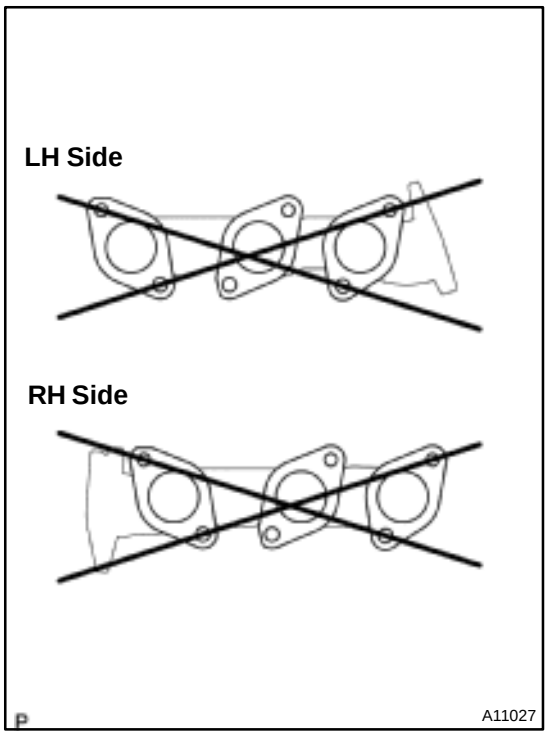

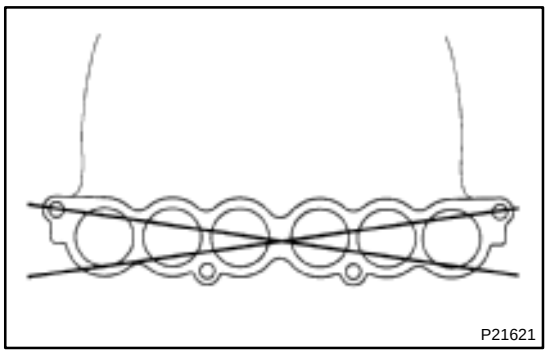

14. INSPECT AIR INTAKE CHAMBER AND INTAKE AIR CONNECTOR

Using a precision straight edge and feeler gauge, measure the surfaces contacting the intake manifold and intake air connector for warpage.

Maximum warpage: 0.10 mm (0.0039 in.)

If warpage is greater than maximum, replace the air intake chamber or intake air connector.

EM105–02

INSPECTION

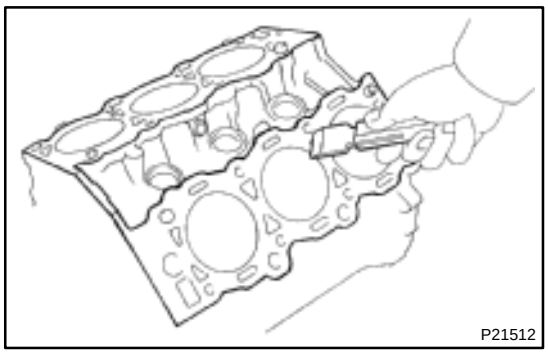

1. CLEAN CYLINDER BLOCK

(a) Remove the gasket material.
Using a gasket scraper, remove all the gasket material from the top surface of the cylinder block.

(b) Clean the cylinder block.
Using a soft brush and solvent, thoroughly clean the cylinder block.

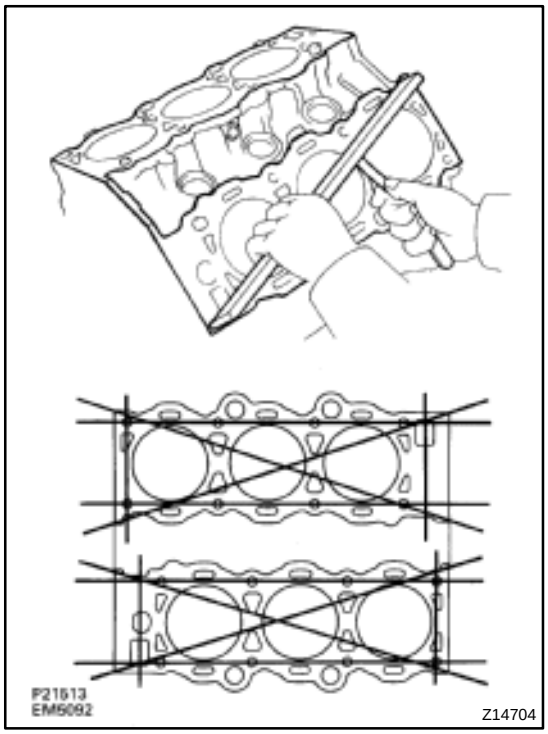

2. INSPECT CYLINDER BLOCK

(a) Inspect for flatness.
Using a precision straight edge and feeler gauge, measure the surfaces contacting the cylinder head gasket for warpage.
Maximum warpage: 0.05 mm (0.0020 in.)

If warpage is greater than maximum, replace the cylinder block.

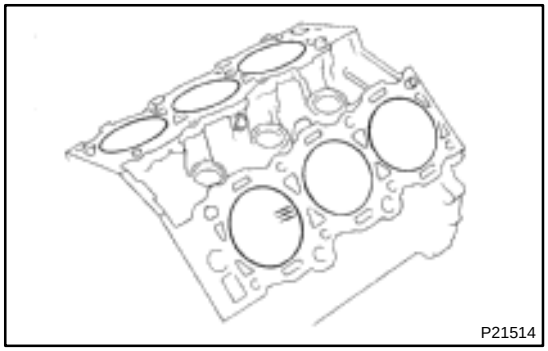

(b) Visually check the cylinder for vertical scratches.

If deep scratches are present, rebore all the 6 cylinders. If necessary, replace the cylinder block.

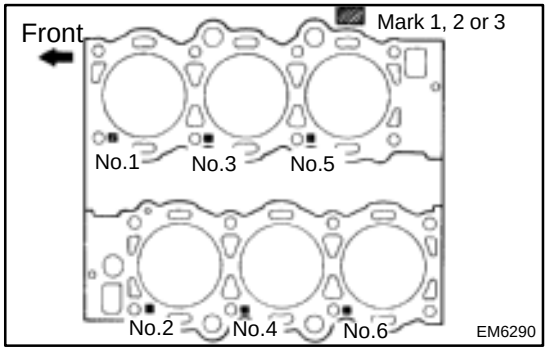

(c) Inspect the cylinder bore diameter.

HINT:

There are 3 sizes of the standard cylinder bore diameter, marked ”1”, ”2” and ”3” accordingly. The mark is stamped on the top of the cylinder block.

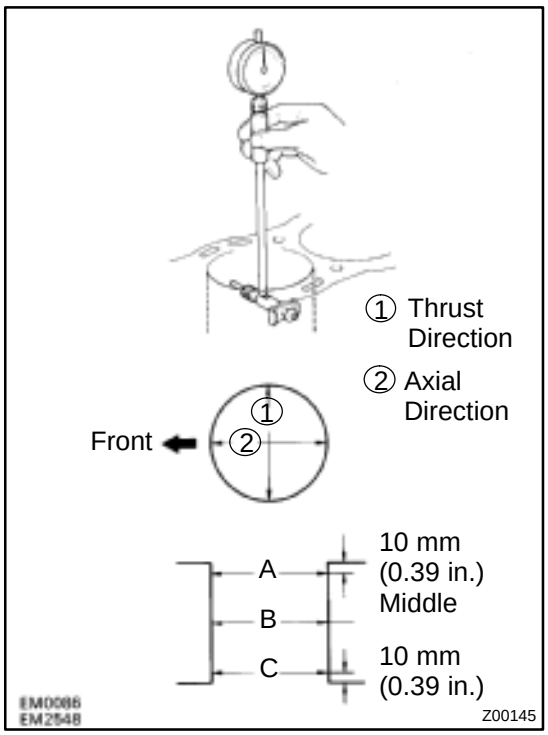

Using a cylinder gauge, measure the cylinder bore diameter at positions A, B and C in the thrust and axial directions.

Standard diameter:

Mark "1"	93.500 – 93.510 mm (3.6811 – 3.6815 in.)
Mark "2"	93.510 – 93.520 mm (3.6815 – 3.6819 in.)
Mark "3"	93.520 – 93.530 mm (3.6819 – 3.6823 in.)

Maximum diameter:

STD	93.730 mm (3.6902 in.)
O/S 0.50	94.230 mm (3.7098 in.)

If the diameter is greater than maximum, rebore all the 6 cylinders, If necessary, replace the cylinder block.

3. REMOVE CYLINDER RIDGE

If the wear is less than 0.2 mm (0.008 in.), using a ridge reamer, grind the top of the cylinder.

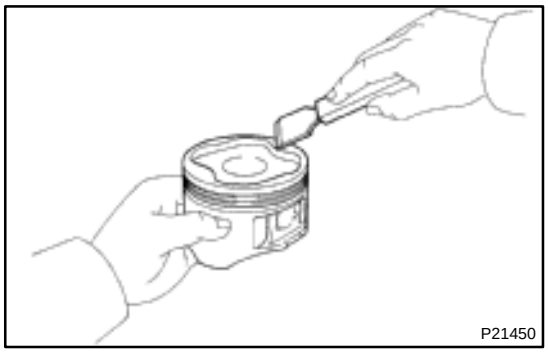

4. CLEAN PISTON

(a) Using a gasket scraper, remove the carbon from the piston top.

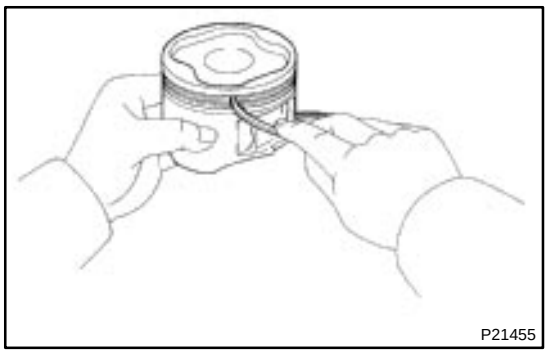

(b) Using a groove cleaning tool or broken ring, clean the piston ring grooves.

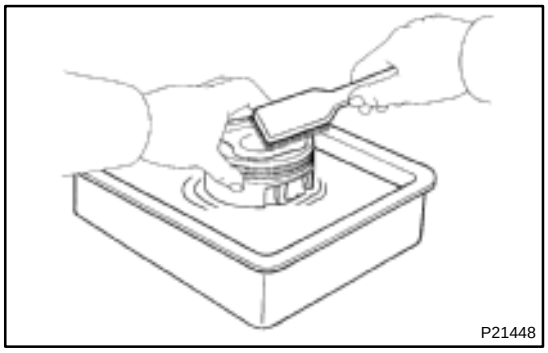

(c) Using solvent and a brush, thoroughly clean the piston.

NOTICE:

Do not use a wire brush.

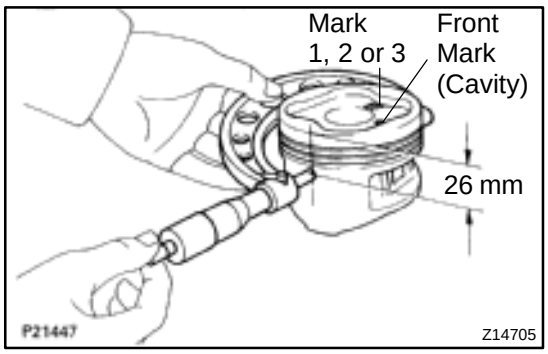

5. INSPECT PISTON AND CONNECTING ROD

(a) Inspect the piston oil clearance.

HINT:

There are 3 sizes of the standard piston diameter, marked ”1”, ”2” and ”3” accordingly. The mark is stamped on the piston top.

(1) Using a micrometer, measure the piston diameter at right angles to the piston pin center line, 26 mm (1.02 in.) from the piston head.

Piston diameter:

STD	Mark ”1”	93.356 – 93.366 mm (3.6754 – 3.6758 in.)
	Mark ”2”	93.367 – 93.376 mm (3.6759 – 3.6762 in.)
	Mark ”3”	93.377 – 93.386 mm (3.6763 – 3.6766 in.)
O/S 0.50		93.856 – 93.886 mm (3.6951 – 3.6963 in.)

(2) Measure the cylinder bore diameter in the thrust directions. (See step 2)

(3) Subtract the piston diameter measurement from the cylinder bore diameter measurement.

Standard oil clearance:

0.134 – 0.154 mm (0.0053 – 0.0060 in.)

Maximum oil clearance: 0.174 mm (0.0069 in.)

If the oil clearance is greater than maximum, replace all the 6 pistons. If necessary, rebore all the 6 cylinders or replace the cylinder block.

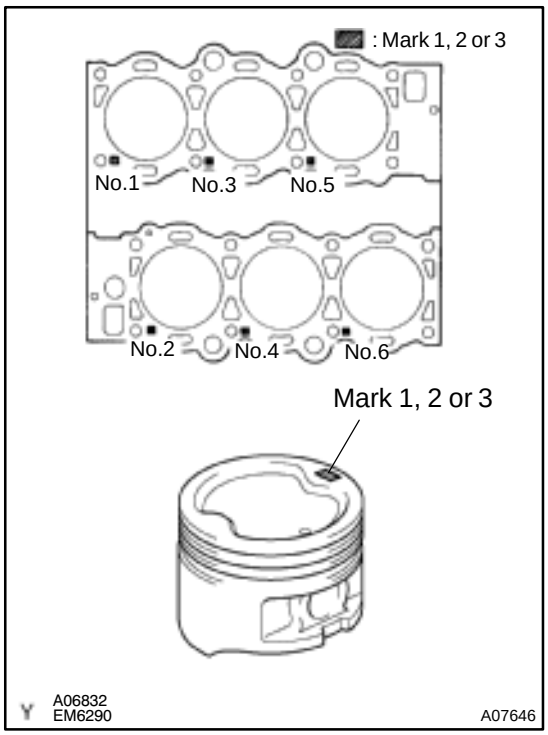

HINT:

Use new cylinder block:

Use a piston with the same number mark as the standard bore diameter marked on the cylinder block.

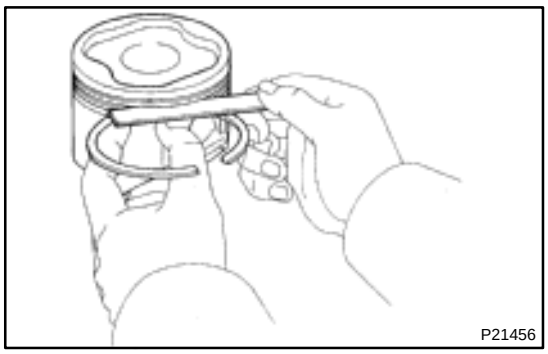
P21456

(b) Inspect the piston ring groove clearance.
Using a feeler gauge, measure the clearance between new piston ring and the wall of the piston ring groove.
Standard ring groove clearance:

No.1	0.040 – 0.080 mm (0.0016 – 0.0031 in.)
No.2	0.030 – 0.070 mm (0.0012 – 0.0028 in.)

If the clearance is not as specified, replace the piston.

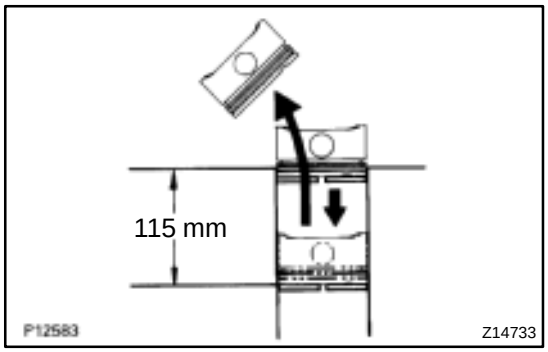

(c) Inspect the piston ring end gap.
(1) Insert the piston ring into the cylinder bore.
(2) Using a piston, push the piston ring a little beyond the bottom of the ring travel, 115 mm (4.53 in.) from the top of the cylinder block.

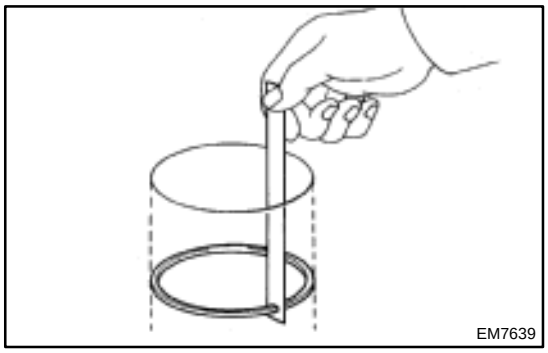
EM7639

(3) Using a feeler gauge, measure the ring end gap.
Standard end gap:

No.1	0.300 – 0.500 mm (0.0118 – 0.0197 in.)
No.2	0.400 – 0.600 mm (0.0157 – 0.0236 in.)
Oil (Side rail)	0.150 – 0.550 mm (0.0059 – 0.0217 in.)

Maximum end gap:

No.1	1.10 mm (0.0433 in.)
No.2	1.20 mm (0.0472 in.)
Oil (Side rail)	1.15 mm (0.0453 in.)

If the end gap is greater than maximum, replace the piston ring.
If the end gap is greater than maximum, even with a new piston ring, rebore all the 6 cylinders or replace the cylinder block.

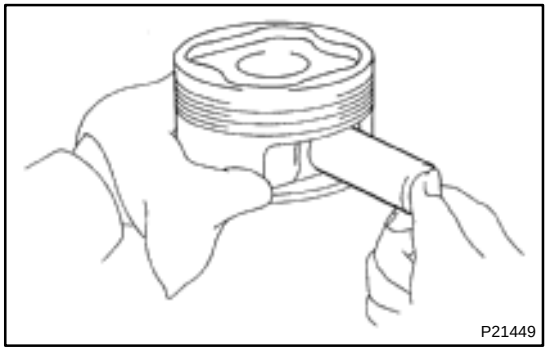
P21449

(d) Inspect the piston pin fit.
At 60˚C (140˚F), you should be able to push the piston pin into the piston pin hole with your thumb.

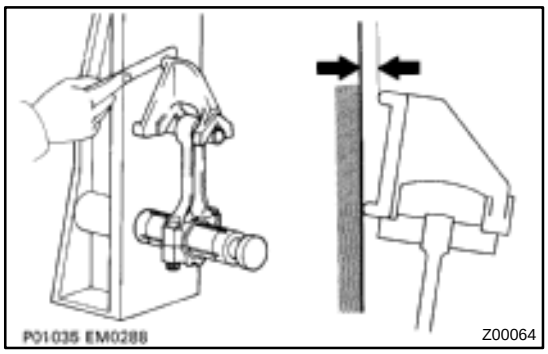

(e) Using a rod aligner and feeler gauge, check the connecting rod alignment.

(1) Check for bend.

Maximum bend:

0.05 mm (0.0020 in.) per 100 mm (3.94 in.)

If bend is greater than maximum, replace the connecting rod assembly.

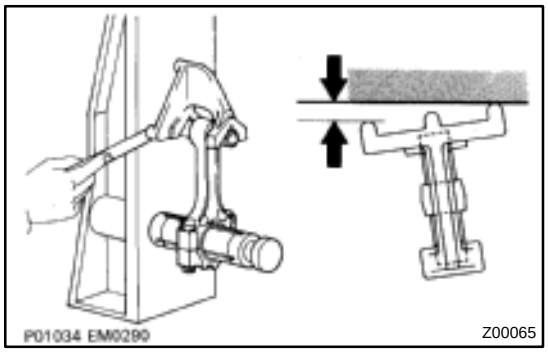

(2) Check for twist.

Maximum twist:

0.15 mm (0.0059 in.) per 100 mm (3.94 in.)

If twist is greater than maximum, replace the connecting rod assembly.

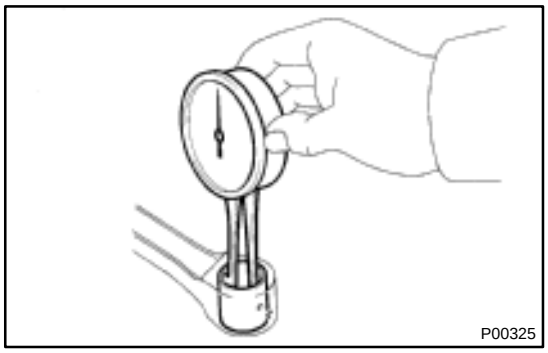

(f) Inspect the piston pin oil clearance.

(1) Using a caliper gauge, measure the inside diameter of the connecting rod bushing.

Bushing inside diameter:

22.005 – 22.017 mm (0.8663 – 0.8668 in.)

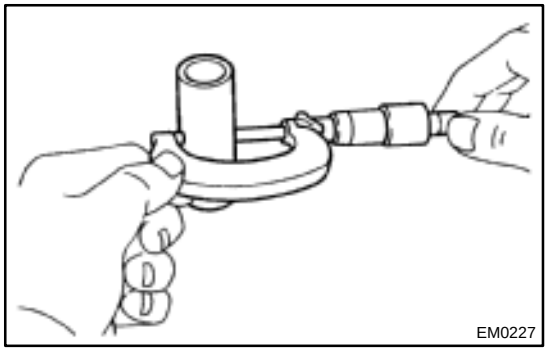

(2) Using a micrometer, measure the pin diameter.

Piston pin diameter:

21.997 – 22.009 mm (0.8660 – 0.8665 in.)

(3) Subtract the piston pin diameter measurement from the bushing inside diameter measurement.

Standard oil clearance:

0.005 – 0.011 mm (0.0002 – 0.0004 in.)

Maximum oil clearance: 0.05 mm (0.0020 in.)

If the oil clearance is greater than maximum, replace the bushing (See page EM–97).

If necessary, replace the piston and piston pin as a set.

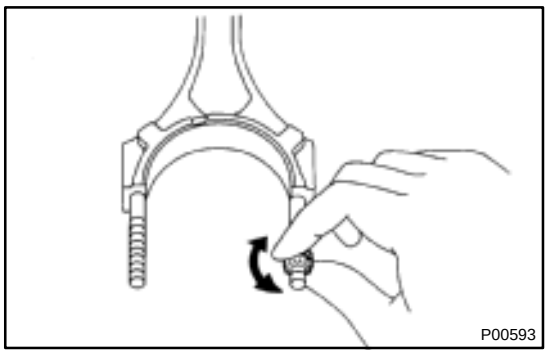
P00593

(g) Inspect the connecting rod bolts.
(1) Install the cap nut to the connecting rod bolt. Check that the rod cap nut can be turned easily by hand to the end of the thread.

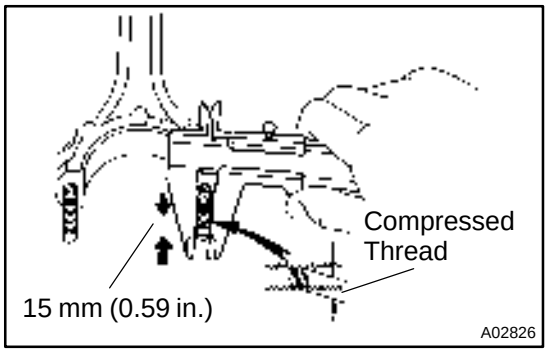

A02826

(2) If the cap nut cannot be turned easily, measure the outer diameter of the compressed thread with a vernier caliper.

Standard outer diameter:
7.860 – 8.000 mm (0.3094 – 0.3150 in.)
Minimum outer diameter: 7.600 mm (0.2992 in.)

HINT:
If the location of this area cannot be judged by visual inspection, measure the outer diameter at the location shown in the illustration.
If the outer diameter is less than minimum, replace the connecting rod and rod cap nut as a set.

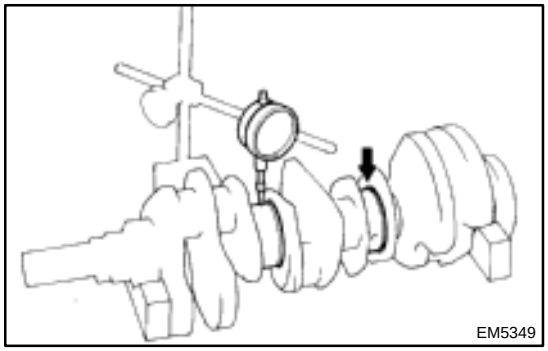
EM5349

6. INSPECT CRANKSHAFT

(a) Inspect for circle runout.
(1) Place the crankshaft on V–blocks.
(2) Using a dial indicator, measure the circle runout at the No.2 and No.3 journals.

Maximum circle runout: 0.06 mm (0.0024 in.)

If the circle runout is greater than maximum, replace the crankshaft.

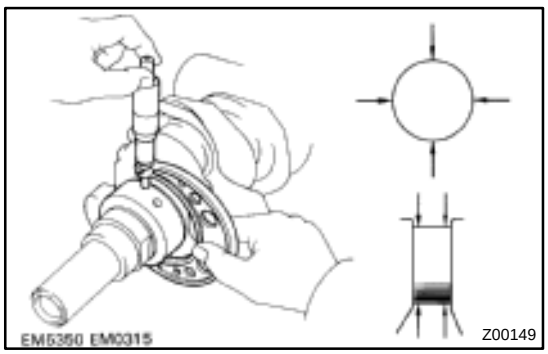

Z00149

(b) Inspect the main journals and crank pins.
(1) Using a micrometer, measure the diameter of each main journal and crank pin.

Main journal diameter:

STD	63.985 – 64.000 mm (2.5191 – 2.5197 in.)
U/S 0.25	63.745 – 63.755 mm (2.5096 – 2.5100 in.)

Crank pin diameter:

STD	54.987 – 55.000 mm (2.1648 – 2.1654 in.)
U/S 0.25	54.745 – 54.755 mm (2.1553 – 2.1557in.)

If the diameter is not as specified, check the oil clearance (See page EM–83).

(2) Check each main journal and crank pin for taper and out–of–round as shown.

Maximum taper and out–of–round:
0.02 mm (0.0008 in.)

If the taper or out–of–round is greater than maximum, grind or replace the crankshaft.

7. IF NECESSARY, GRIND AND HONE MAIN JOURNALS AND/OR CRANK PINS

(a) Grind and hone the main journals and/or crank pins to the finished undersized diameter (See procedure step 6).

(b) Install new main journal and/or crank pin undersized bearings.

EM0ZT–02

INSTALLATION

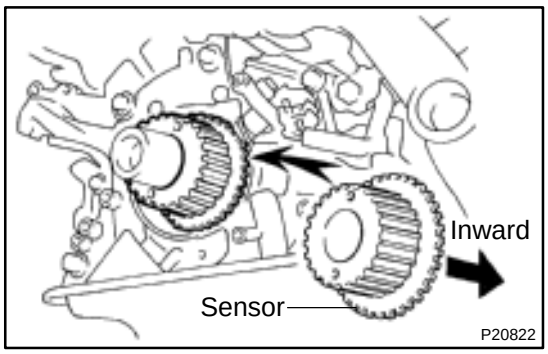

1. INSTALL CRANKSHAFT TIMING PULLEY

(a) Align the pulley set key with the key groove of the timing pulley and slide on the timing pulley.

(b) Slide on the timing pulley, facing the flange side inward.

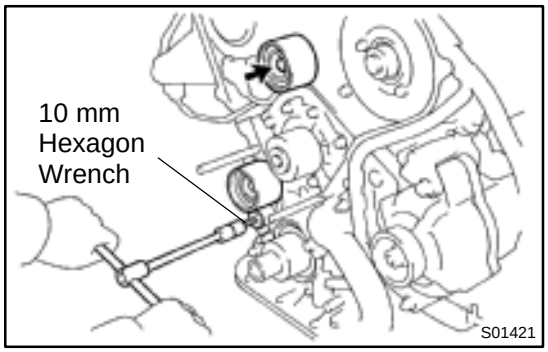

2. INSTALL NO.1 IDLER PULLEY

(a) Using a 10 mm hexagon wrench, install the plate washer and idler pulley with bolt.
Torque: 35 N·m (350 kgf·cm, 26 ft·lbf)

(b) Check that the pulley bracket moves smoothly.

3. INSTALL NO.2 IDLER PULLEY

(a) Install the idler pulley with the bolt.
Torque: 40 N·m (400 kgf·cm, 30 ft·lbf)

(b) Check that the idler pulley moves smoothly.

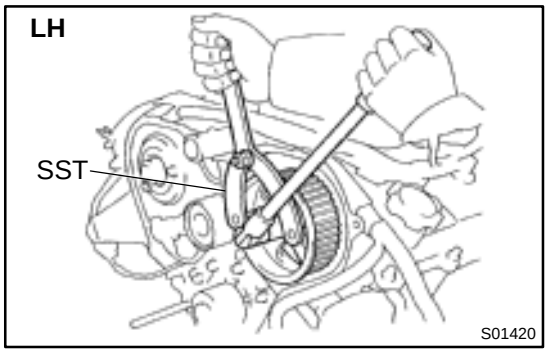

4. INSTALL LH CAMSHAFT TIMING PULLEY

(a) Face the flange side of the timing pulley outward.

(b) Align the knock pin on the camshaft with the knock pin groove of the timing pulley, and slide on the timing pulley.

(c) Using SST, install the pulley bolt.
SST 09960–10010 (09962–01000, 09963–01000)
Torque: 110 N·m (1,100 kgf·cm, 81 ft·lbf)

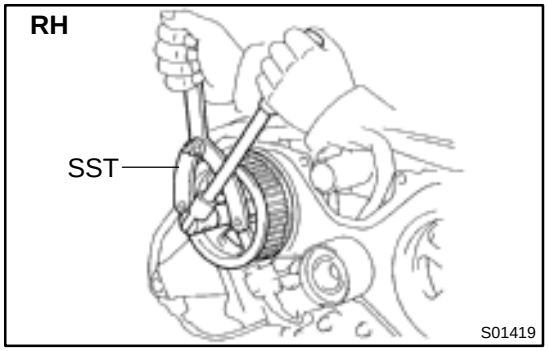

5. INSTALL RH CAMSHAFT TIMING PULLEY

(a) Face the flange side of the timing pulley outward.

(b) Align the knock pin on the camshaft with the knock pin groove of the timing pulley, and slide on the timing pulley.

(c) Using SST, install the pulley bolt.
SST 09960–10010 (09962–01000, 09963–01000)
Torque: 110 N·m (1,100 kgf·cm, 81 ft·lbf)

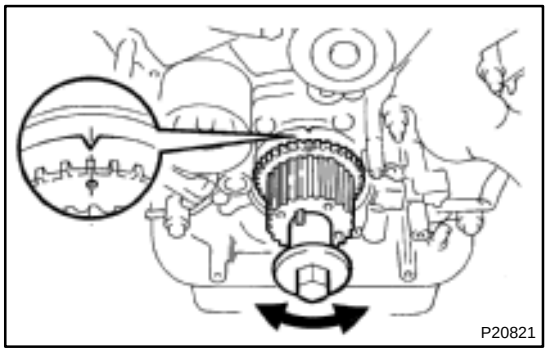

6. SET NO.1 CYLINDER TO TDC/COMPRESSION

(a) Temporarily install the crankshaft pulley bolt to the crankshaft.

(b) Turn the crankshaft, and align the timing marks of the crankshaft timing pulley and oil pump body.

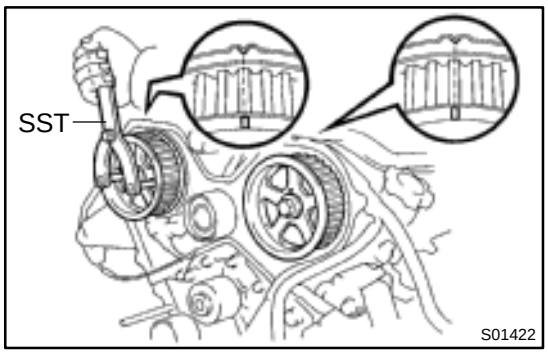

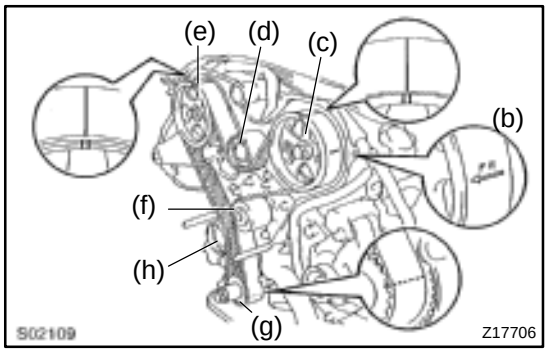

(c) Using SST, turn the camshaft pulley, align the timing marks of the timing pulley and No.3 timing belt cover.
SST 09960–10010 (09962–01000, 09963–01000)

7. INSTALL TIMING BELT

NOTICE:

The engine should be cold.

(a) Remove any oil or water on the pulleys, and keep them clean.

NOTICE:

Only wipe the pulleys; do not use any cleansing agent.

(b) Face the front mark on the timing belt forward.
(c) Install the timing belt to the LH camshaft timing pulley. Align the installation mark on the timing belt with the timing mark of the camshaft timing pulley.
(d) Install the timing belt to the No.2 idler pulley.
(e) Install the timing belt to the RH camshaft timing pulley. Align the installation mark on the timing belt with the timing mark of the camshaft timing pulley.
(f) Install the timing belt to the water pump pulley.
(g) Install the timing belt to the crankshaft timing pulley. Align the installation mark on the timing belt with the timing mark of the crankshaft timing pulley.
(h) Install the timing belt to the No.1 idler pulley.

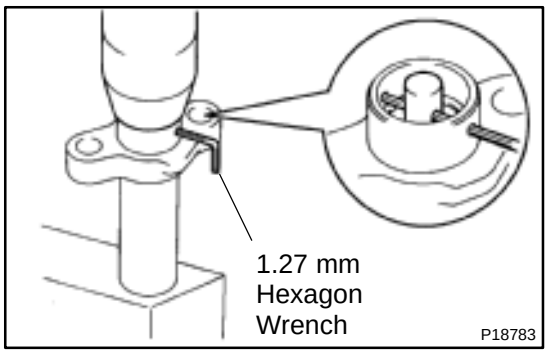

8. SET TIMING BELT TENSIONER

(a) Using a press, slowly press in the push rod using 981 – 9,807 N (100 – 1,000 kgf, 200 – 2,205 lbf) of pressure.
(b) Align the holes of the push rod and housing, pass a 1.27 mm hexagon wrench through the holes to keep the setting position of the push rod.
(c) Release the press.

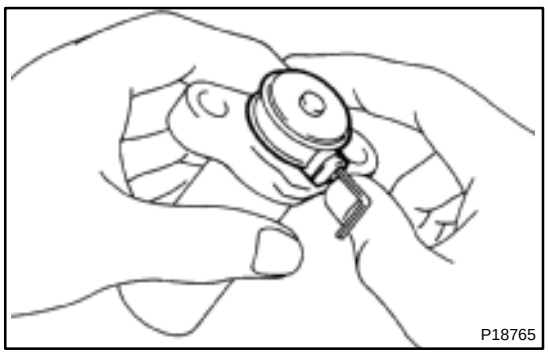

(d) Install the dust boot to the tensioner.

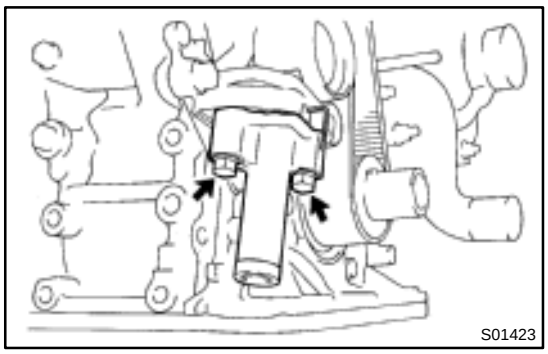

9. INSTALL TIMING BELT TENSIONER

(a) Temporarily install the tensioner with the 2 bolts.

(b) Alternately tighten the 2 bolts.

Torque: 27 N·m (280 kgf·cm, 20 ft·lbf)

(c) Remove the 1.27 mm hexagon wrench from the tensioner.

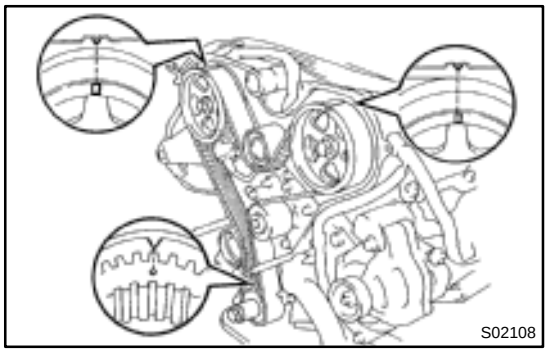

10. CHECK VALVE TIMING

(a) Turn the crankshaft, and align the timing marks of the crankshaft timing pulley and oil pump body.

NOTICE:

Always turn the crankshaft clockwise.

(b) Check that the timing marks of the RH and LH timing pulleys with the timing marks of the No.3 timing belt cover as shown in the illustration.

If the marks do not align, remove the timing belt and reinstall it.

(c) Remove the crankshaft pulley bolt.

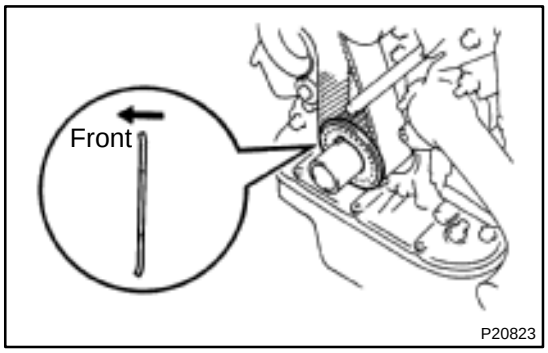

11. INSTALL TIMING BELT GUIDE

Install the guide, facing the cup side outward.

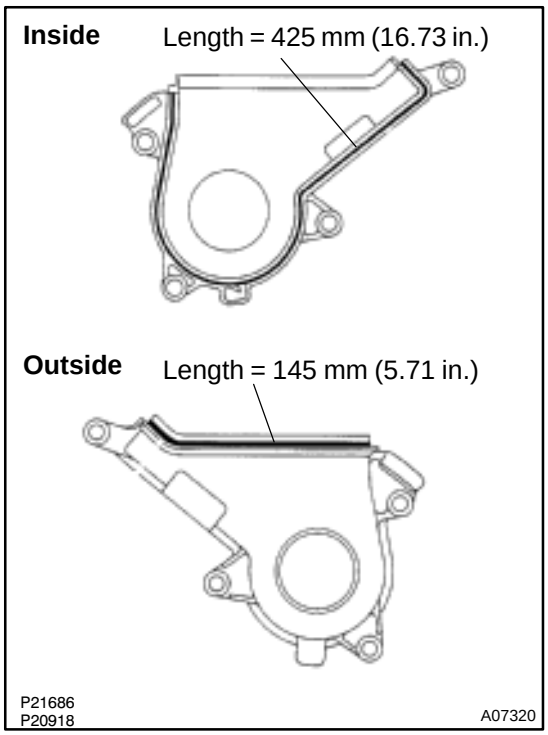

12. INSTALL NO.1 TIMING BELT COVER AND STARTER WIRE BRACKET

(a) Check that the timing belt cover gaskets have cracks or peeling, etc.

If the gasket does have cracks or peeling, etc., replace it using these steps.

- Using a screwdriver and gasket scraper, remove all the old gasket material.
- Thoroughly clean all components to remove all the loose material.
- Remove the backing paper from a new gasket and install the gasket evenly to the part of the belt cover shaded back in the illustration.

(b) Install the timing belt cover with the 4 bolts.

Torque: 9 N·m (90 kgf·cm, 80 in.·lbf)

(c) Install the starter wire bracket with the 2 bolts.

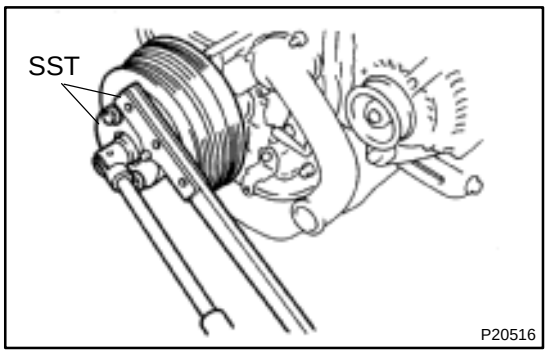

13. INSTALL CRANKSHAFT PULLEY

(a) Align the pulley set key with the key groove of the pulley, and slide the pulley.

(b) Using SST, install a new bolt.
SST 09213–54015 (90119–08216), 09330–00021
Torque: 300 N·m (3,000 kgf·cm, 217 ft·lbf)

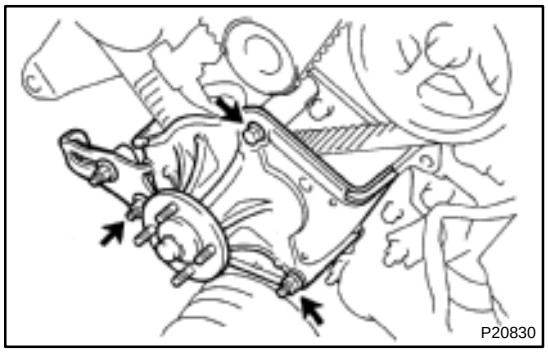

14. INSTALL FAN BRACKET

(a) Install the fan bracket with the bolt and nut.

(b) Install the PS pump adjusting strut with the nut.

15. INSTALL NO.2 TIMING BELT COVER

(a) Check that the timing belt cover gasket has no cracks or peeling, etc.

If the gasket does have cracks or peeling, etc., replace it using these steps.

(1) Using a screwdriver and gasket scraper, remove all the old gasket material.

(2) Thoroughly clean all components to remove all the loose material.

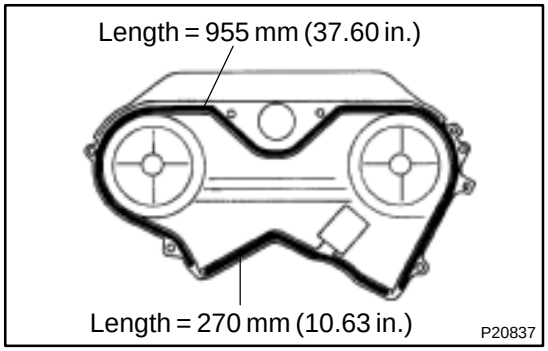

(3) Remove the backing paper from a new gasket and install the gasket evenly to the part of the belt cover shaded black in the illustration.

(b) Install the timing belt cover with the 6 bolts.
Torque: 9 N·m (90 kgf·cm, 80 in.·lbf)

(c) Connect the 4 high–tension cord clamps and camshaft position sensor connector to the timing belt cover.

16. INSTALL OIL DIPSTICK AND GUIDE

(a) Install a new O–ring to the dipstick guide.

(b) Apply soapy water to the O–ring.

(c) Install the oil dipstick and guide to the cylinder block.

(d) Install the bolt to the generator bracket.
Torque: 8 N·m (80 kgf·cm, 71 in.·lbf)

17. INSTALL A/C COMPRESSOR BRACKET
Torque: 47 N·m (479 kgf·cm, 35 ft·lbf)

18. TEMPORARILY INSTALL FAN WITH FLUID COUPLING AND FAN PULLEYS

19. INSTALL NO.2 FAN SHROUD

20. INSTALL AND ADJUST DRIVE BELT FOR GENERATOR (See page CH–15)

21. TIGHTEN FAN WITH FLUID COUPLING AND FAN PULLEYS

Torque: 5.4 N·m (54 kgf·cm, 48 in.·lbf)

22. CONNECT A/C COMPRESSOR TO ENGINE

(a) Install the A/C compressor with the 4 bolts.

Torque: 25 N·m (250 kgf·cm, 18 ft·lbf)

(b) Install the drive belt. (See page AC–18)

(c) Connect the A/C compressor connector.

23. CONNECT PS PUMP TO ENGINE

(a) Temporarily install the PS pump with the bolt and nut.

(b) Install the drive belt. (See page SR–3)

(c) Tighten the bolt and nut.

Torque: 43 N·m (440 kgf·cm, 31 ft·lbf)

(d) Install the PS pressure tube clamp with the bolt.

(e) Connect the 2 PS air hoses to the air intake chamber and resonator.

24. CONNECT UPPER RADIATOR HOSE

25. FILL ENGINE WITH COOLANT

26. START ENGINE CHECK FOR LEAKS

27. INSTALL ENGINE UNDER COVER

28. PERFORM ROAD TEST

Check for abnormal noise, shock, slippage, correct shift points and smooth operation.

29. RECHECK ENGINE COOLANT LEVEL

EM0ZZ–03

INSTALLATION

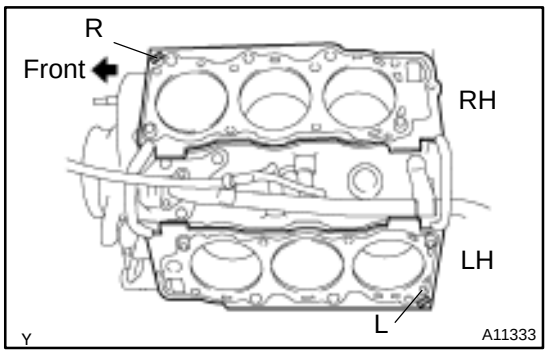

1. PLACE CYLINDER HEAD ON CYLINDER BLOCK

(a) Place 2 new cylinder head gaskets in position on the cylinder block.

NOTICE:

Be careful of the installation direction.

(b) Place the 2 cylinder heads in position on the cylinder head gaskets.

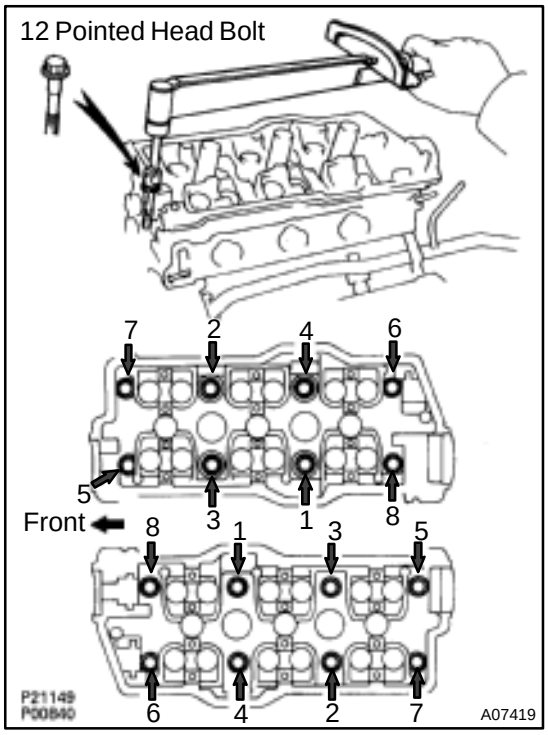

2. INSTALL 12 POINTED HEAD CYLINDER HEAD BOLTS

HINT:

- The cylinder head bolts are tightened in 3 progressive steps (steps (b), (d) and (e)).
- If any bolt is broken or deformed, replace it.

(a) Apply a light coat of engine oil on the threads and under the heads of the cylinder head bolts.

(b) Install and uniformly tighten the cylinder head bolts on each cylinder head in several passes, in the sequence shown, then repeat for the other side as shown.

Torque: 34 N·m (350 kgf·cm, 25 ft·lbf)

If any of the cylinder head bolts does not meet the torque specification, replace the cylinder head bolt.

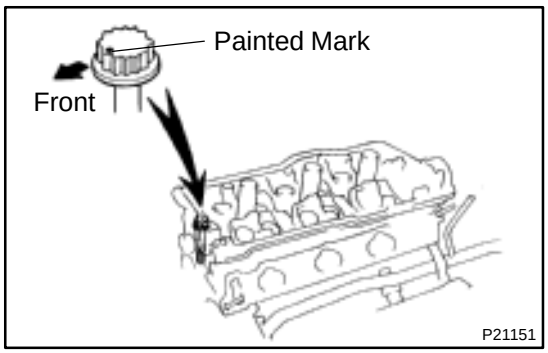

(c) Mark the front of the cylinder head bolt head with paint.

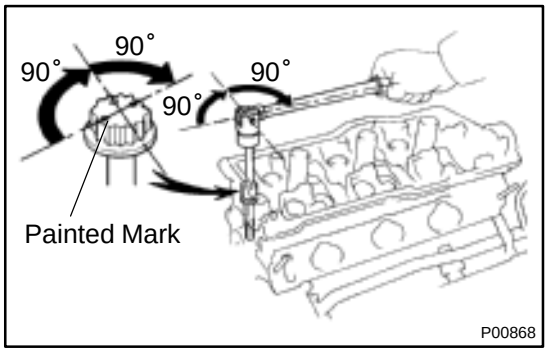

(d) Retighten the cylinder head bolts by 90° in the numerical order shown.

(e) Retighten the cylinder head bolts by an additional 90°.

(f) Check that the painted mark is now facing rearward.

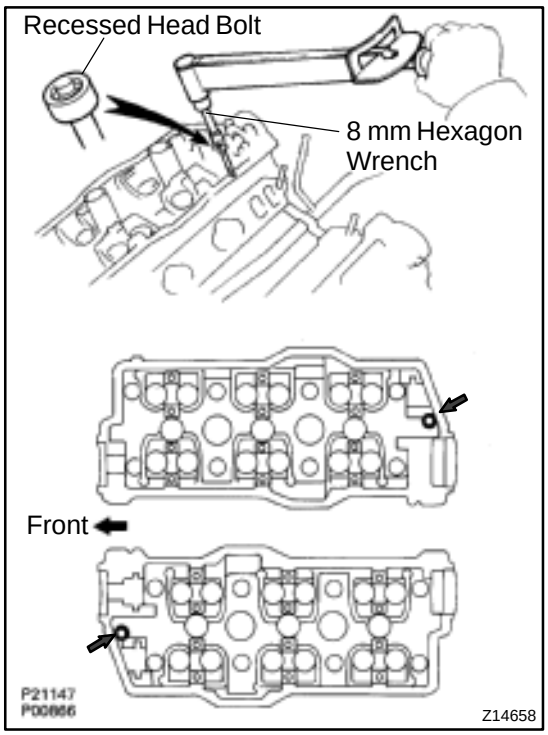

3. INSTALL RECESSED HEAD CYLINDER HEAD BOLTS

(a) Apply a light coat of engine oil on the threads and under the heads of the cylinder head bolts.

(b) Using an 8 mm hexagon wrench, install the cylinder head bolt on each cylinder head, then repeat for the other side as shown.

Torque: 18 N·m (185 kgf·cm, 13 ft·lbf)

(c) Connect the ground strap with the bolt.

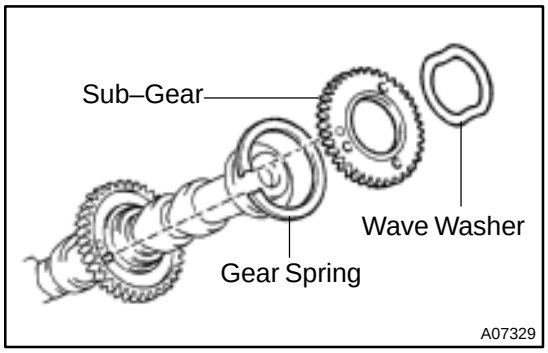

4. ASSEMBLE EXHAUST CAMSHAFTS

(a) Mount the hexagonal wrench head portion of the camshaft in a vise.

NOTICE:

Be careful not to damage the camshaft.

(b) Install the camshaft gear spring, camshaft sub–gear and Wave washer.

HINT:

Attach the pins on the gears to the gear spring ends.

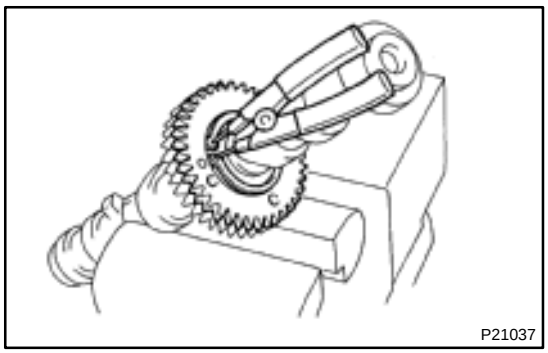

(c) Using snap ring pliers, install the snap ring.

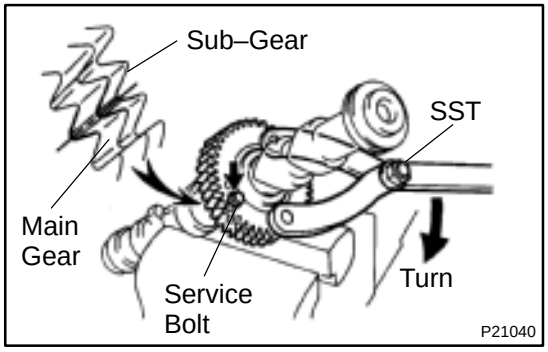

(d) Using SST, align the holes of the camshaft main gear and sub–gear by turning camshaft sub–gear clockwise, and temporarily install a service bolt.

SST 09960–10010 (09962–01000, 09963–00600)

(e) Align the gear teeth of the main gear and sub–gear, and tighten the service bolt.

5. INSTALL CAMSHAFTS

NOTICE:

Since the thrust clearance of the camshaft is small, the camshaft must be kept level while it is being installed. If the camshaft is not kept level, the portion of the cylinder head receiving the shaft thrust may crack or be damaged, causing the camshaft to seize or break. To avoid this, these steps should be carried out.

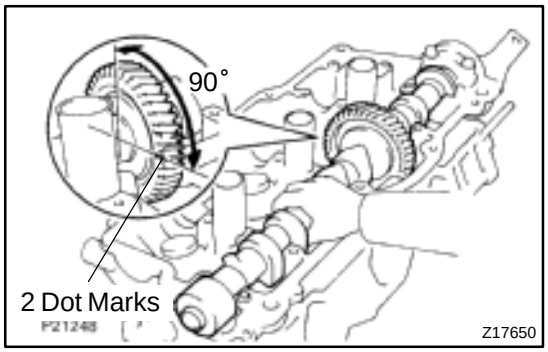

(a) Install the intake camshaft of the RH cylinder head.
  (1) Apply new engine oil to the thrust portion and journal of the camshaft.
  (2) Place the intake camshaft at 90˚ angle of timing mark (2 dot marks) on the cylinder head.

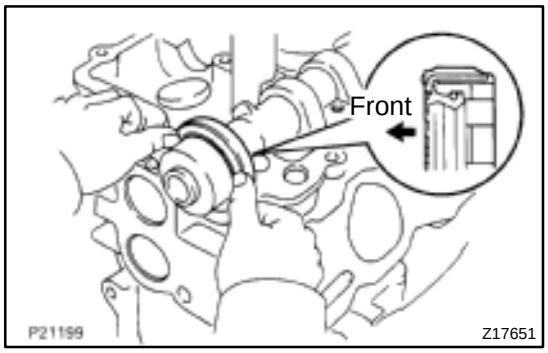

  (3) Apply MP grease to a new oil seal lip.
  (4) Install the oil seal to the camshaft.

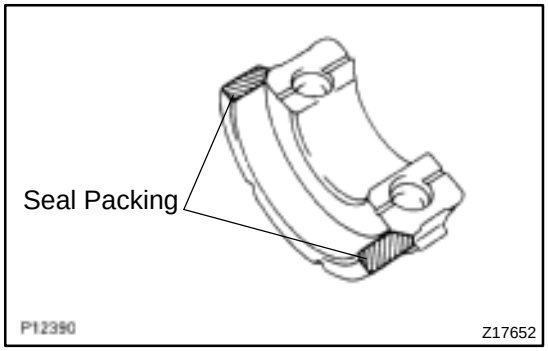

  (5) Remove any old packing (FIPG) material.
  (6) Apply seal packing to the No.1 bearing cap as shown in the illustration.

Seal packing: Part No. 08826–00080 or equivalent

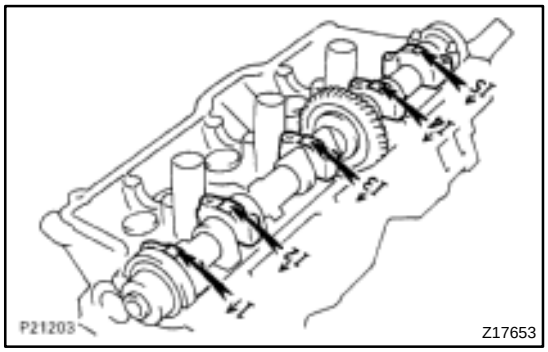

  (7) Install the 5 bearing caps in their proper locations.

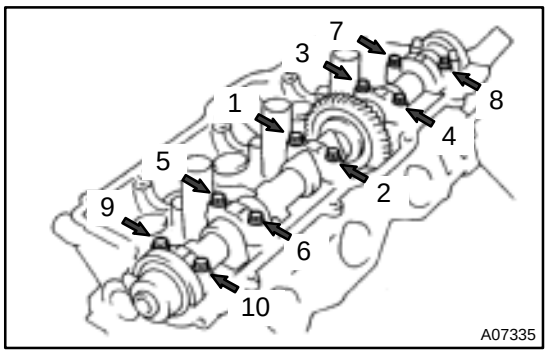

(8) Apply a light coat of engine oil on the threads and under the heads of the bearing cap bolts.
(9) Install and uniformly tighten the 10 bearing cap bolts, in several passes, in the sequence shown.

Torque: 16 N·m (160 kgf·cm, 12 ft·lbf)

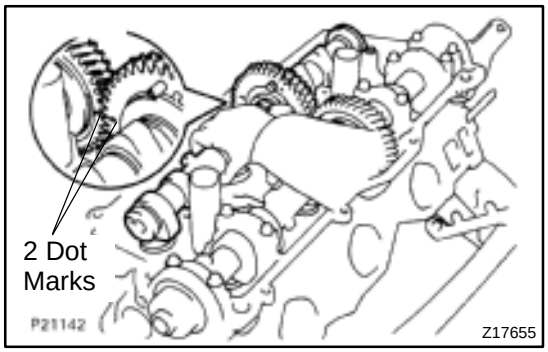

(b) Install the exhaust camshaft of the RH cylinder head.
(1) Apply new engine oil to the thrust portion and journal of the camshaft.
(2) Align the timing marks (2 dot marks) of the camshaft drive and driven gears.
(3) Place the exhaust camshaft on the cylinder head.

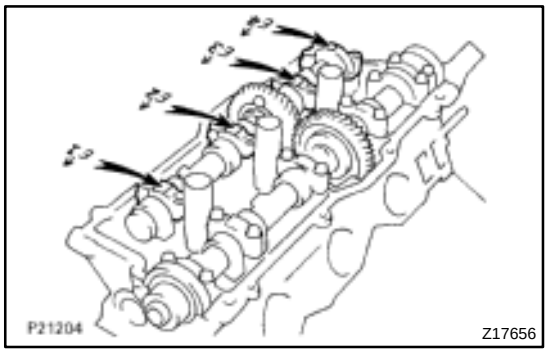

(4) Install the 4 bearing caps in their proper locations.

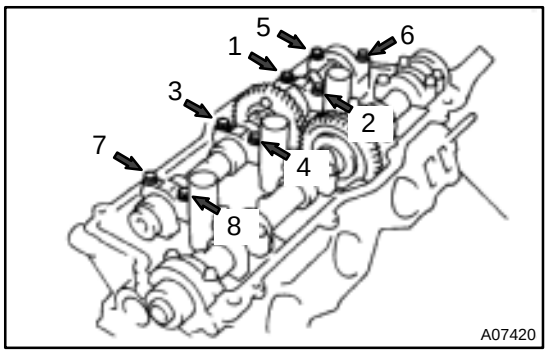

(5) Apply a light coat of engine oil on the threads and under the heads of the bearing cap bolts.
(6) Install and uniformly tighten the 8 bearing cap bolts, in several passes, in the sequence shown.

Torque: 16 N·m (160 kgf·cm, 12 ft·lbf)

(7) Remove the service bolt.

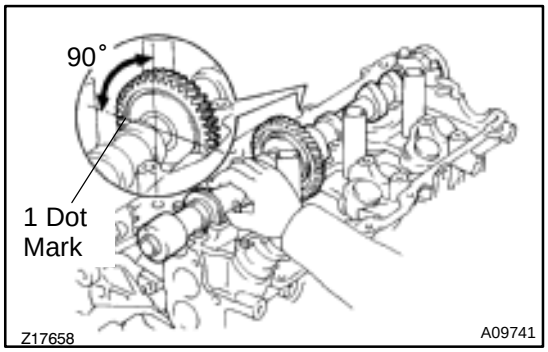

(c) Install the intake camshaft of the LH cylinder head.
(1) Apply new engine oil to the thrust portion and journal of the camshaft.
(2) Place the intake camshaft at 90° angle of timing mark (1 dot mark) on the cylinder head.

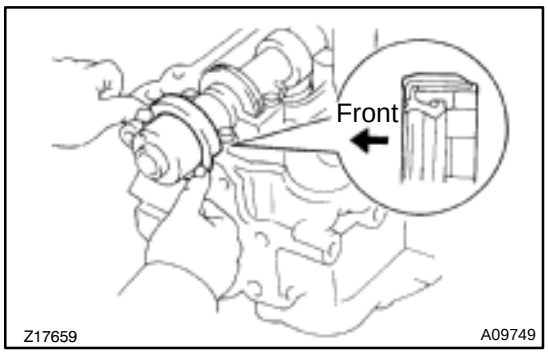

(3) Apply MP grease to a new oil seal lip.
(4) Install the oil seal to the camshaft.

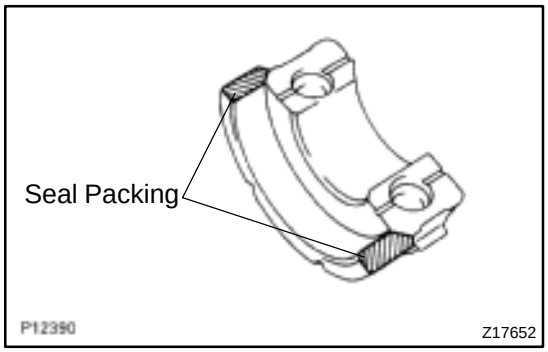

(5) Remove any old packing (FIPG) material.
(6) Apply seal packing to the No.1 bearing cap as shown in the illustration.

Seal packing: Part No. 08826–00080 or equivalent

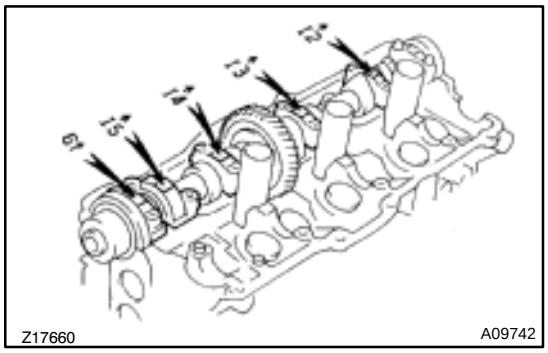

(7) Install the 5 bearing caps in their proper locations.

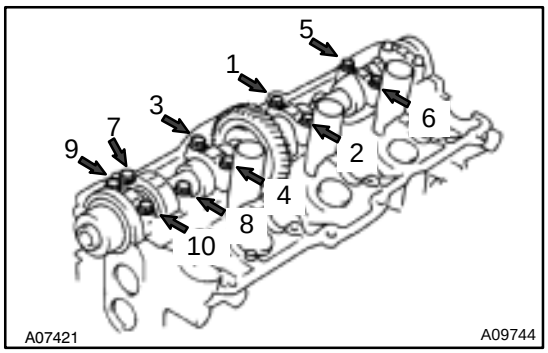

(8) Apply a light coat of engine oil on the threads and under the heads of the bearing cap bolts.
(9) Install and uniformly tighten the 10 bearing cap bolts, in several passes, in the sequence shown.

Torque: 16 N·m (160 kgf·cm, 12 ft·lbf)

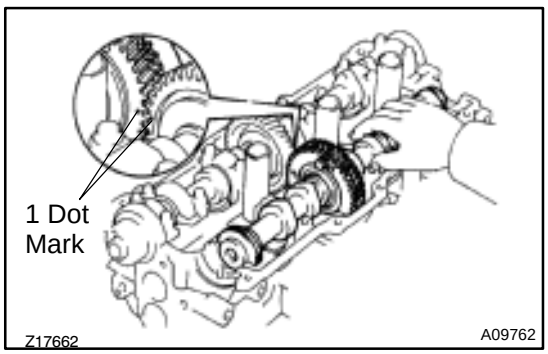

(d) Install the exhaust camshaft of the LH cylinder head.
(1) Apply new engine oil to the thrust portion and journal of the camshaft.
(2) Align the timing marks (1 dot mark) of the camshaft drive and driven gears.
(3) Place the exhaust camshaft on the cylinder head.

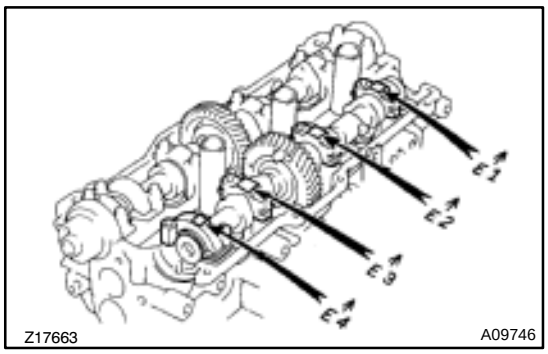

(4) Install the 4 bearing caps in their proper locations.

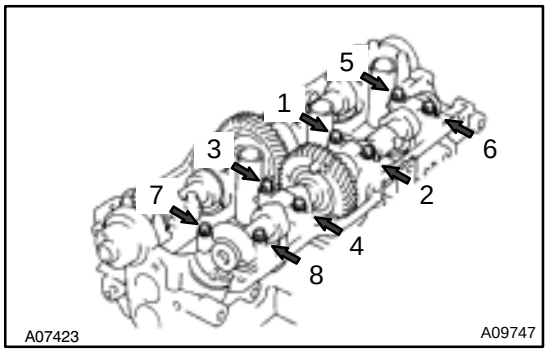

(5) Apply a light coat of engine oil on the threads and under the heads of bearing cap bolts.
(6) Install and uniformly tighten the 8 bearing cap bolts, in several passes, in the sequence shown.

Torque: 16 N·m (160 kgf·cm, 12 ft·lbf)

(7) Remove the service bolt.

6. CHECK AND ADJUST VALVE CLEARANCE (See page EM–4)

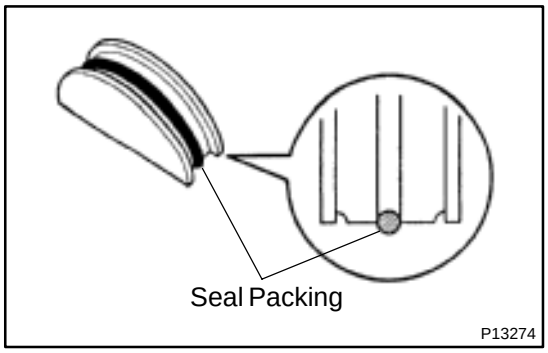

7. INSTALL SEMI–CIRCULAR PLUGS

(a) Remove any old packing (FIPG) material.
(b) Apply seal packing to the semi–circular plug groove.

Seal packing: Part No. 08826–00080 or equivalent

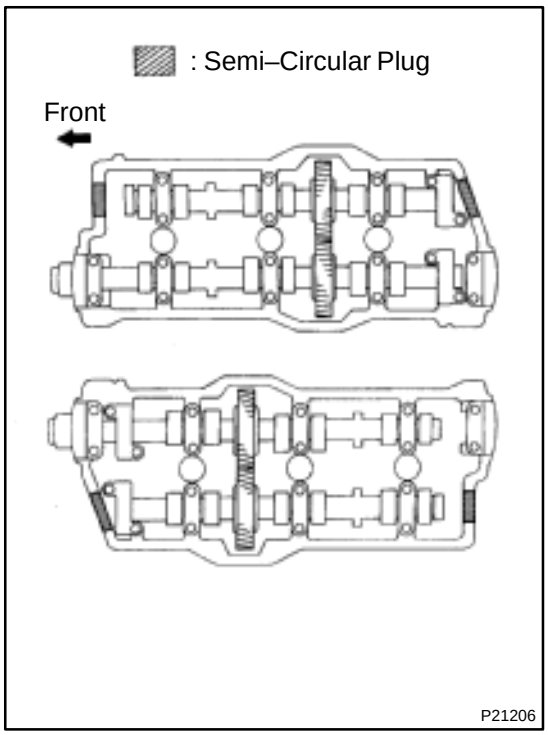

(c) Install the 4 semi–circular plugs to the cylinder heads.

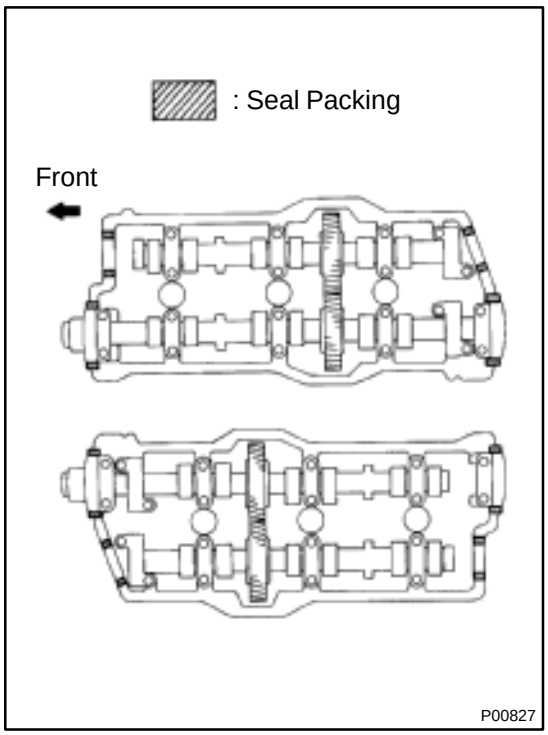

8. INSTALL CYLINDER HEAD COVERS

(a) Apply seal packing to the cylinder heads as shown in the illustration.
Seal packing: Part No. 08826–00080 or equivalent

(b) Install the gasket to the cylinder head cover.

(c) Install the cylinder head cover with the 8 bolts. Uniformly tighten the bolts in several passes. Install the 2 cylinder head covers.
Torque: 6 N·m (60 kgf·cm, 53 in.·lbf)

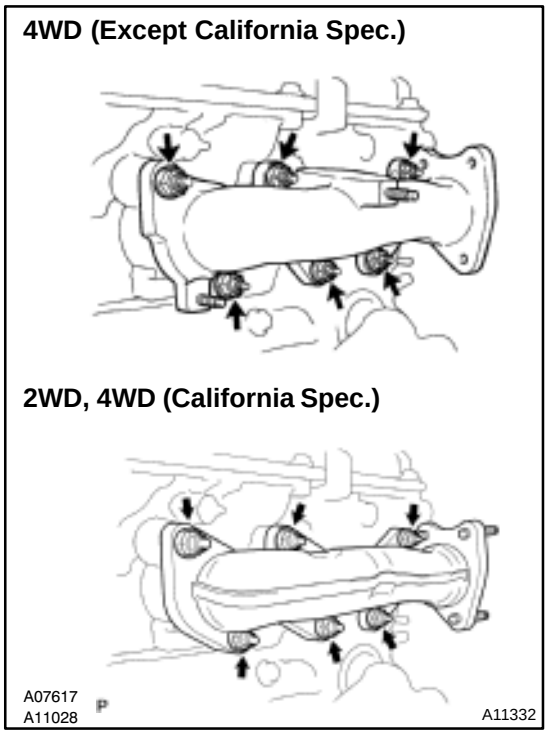

9. INSTALL EXHAUST MANIFOLDS

(a) Install 2 new gaskets and the 2 exhaust manifolds with the 12 nuts.
Torque: 40 N·m (400 kgf·cm, 30 ft·lbf)

(b) 4WD (Except California Spec.):
Install the 2 exhaust manifold heat insulators with the 6 nuts.
Torque: 8 N·m (80 kgf·cm, 71 in.·lbf)

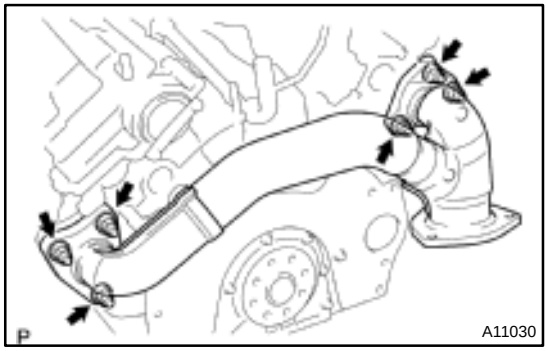

10. INSTALL EXHAUST CROSSOVER PIPE

Install 2 new gaskets and the crossover pipe with the 6 nuts.
Torque: 45 N·m (450 kgf·cm, 33 ft·lbf)

11. INSTALL PS PUMP BRACKET
Torque: 18.5 N·m (185 kgf·cm, 14 ft·lbf)

12. INSTALL GENERATOR BRACKET
Torque: 18.5 N·m (185 kgf·cm, 14 ft·lbf)

13. INSTALL GENERATOR (See page CH–15)

14. INSTALL NO.3 TIMING BELT COVER

(a) Check that the timing belt cover gaskets have no cracks or peeling, etc.

If the gaskets have cracks or peeling etc., replace them using these steps:

(1) Using a screwdriver and gasket scraper, remove all the old gasket material.

(2) Thoroughly clean all components to remove all the loose material.

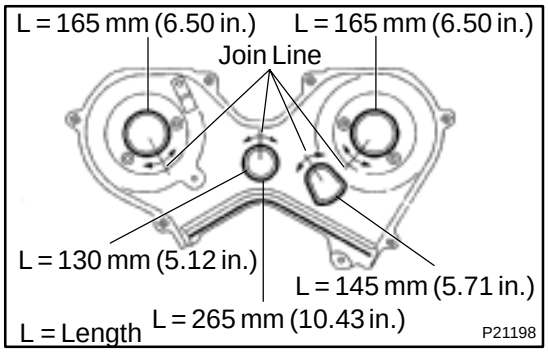

(3) Remove the backing paper from a new gasket and install the gasket evenly to the part of the timing belt cover shaded black in the illustration.

(b) Install the timing belt cover with the 6 bolts.

Torque: 9 N·m (90 kgf·cm, 80 in.·lbf)

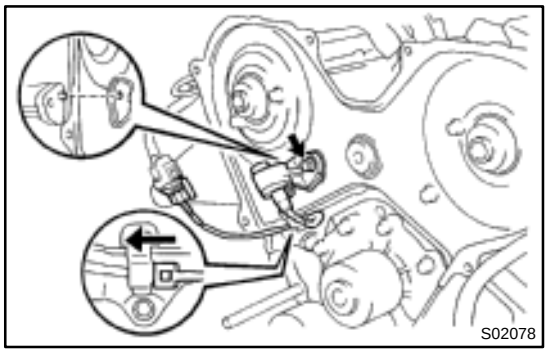

15. INSTALL CAMSHAFT POSITION SENSOR

(a) Install the camshaft position sensor with the bolt.

Torque: 8 N·m (80 kgf·cm, 71 in.·lbf)

HINT:

Match the protrusion of the sensor with the indentation of the RH cylinder head.

(b) Connect the clamp to the No.3 timing belt cover.

(c) Connect the camshaft position sensor connector.

16. INSTALL TIMING BELT (See page EM–19)

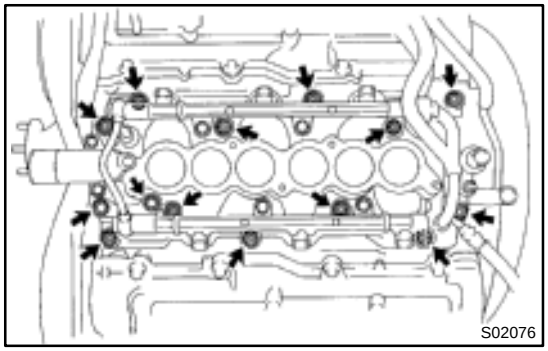

17. INSTALL INTAKE MANIFOLD ASSEMBLY

(a) Install 2 new gaskets and the intake manifold assembly with the 8 bolts, 4 plate washers and 4 nuts.

Torque: 18 N·m (180 kgf·cm, 13 ft·lbf)

(b) Install the intake manifold stay with the 2 bolts.

Torque: 18 N·m (180 kgf·cm, 13 ft·lbf)

18. INSTALL FUEL PRESSURE REGULATOR (See page SF–16)

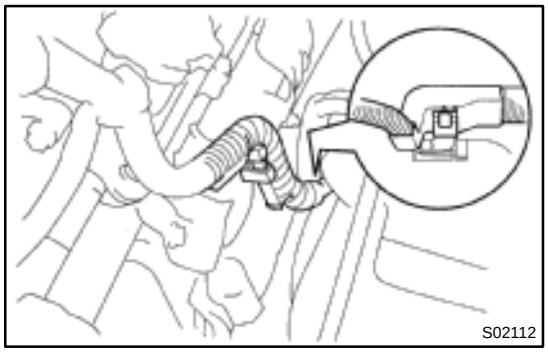

19. CONNECT ENGINE WIRE PROTECTOR

(a) Connect the 2 engine wire clamps.

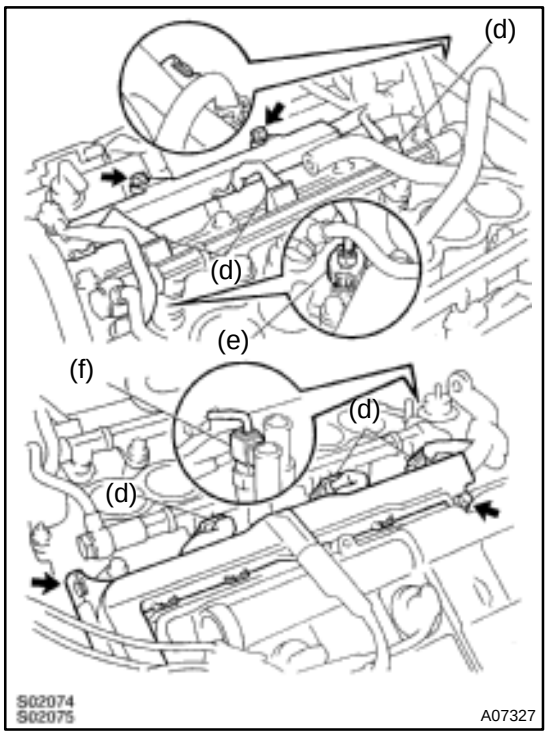

(b) Install the engine wire with the 3 bolts.
(c) Connect the 2 engine wire clamps.
(d) Connect the 6 injector connectors.
(e) Connect the ECT sensor connector.
(f) Connect the ECT sender gauge connector.

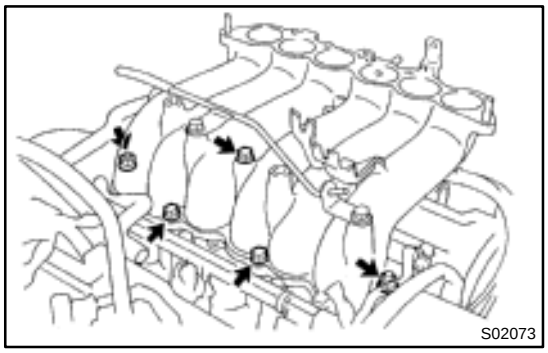

20. INSTALL INTAKE AIR CONNECTOR ASSEMBLY

(a) Install a new gasket and the intake air connectorassembly with the 3 bolts and 2 nuts.
Torque: 18 N·m (180 kgf·cm, 13 ft·lbf)

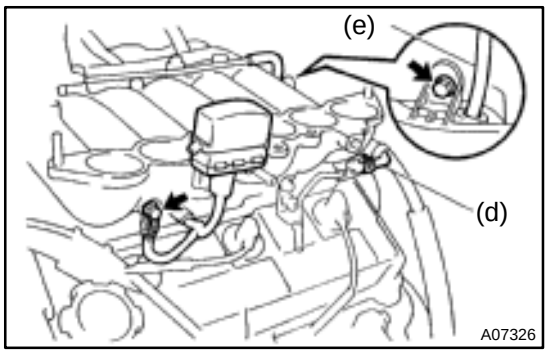

(b) Install the DLC1 to the bracket.
(c) Install the ground strap to the intake air connector with the bolt.
(d) Connect the fuel return hose.
(e) Connect the vacuum sensing hose to the fuel pressure regulator.
(f) Install the engine wire with the bolt.

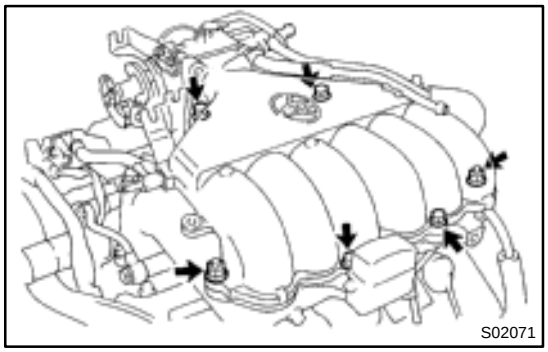

21. INSTALL AIR INTAKE CHAMBER ASSEMBLY

(a) Install a new gasket and the air intake chamber assembly with the 4 bolts and 2 nuts.
Torque: 18 N·m (180 kgf·cm, 13 ft·lbf)

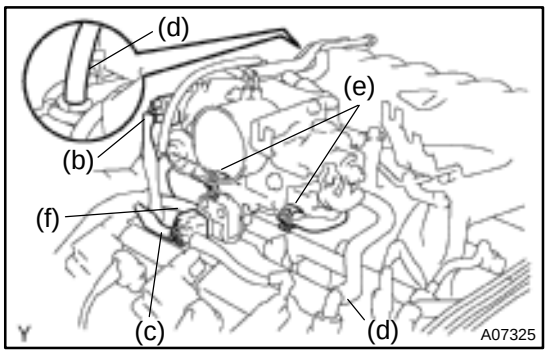

(b) Connect the throttle position sensor connector
(c) Connect the IAC valve connector.
(d) Connect the 2 PCV hoses.
(e) Connect the 2 water bypass hoses.
(f) Connect the air assist hose to the throttle body.

22. INSTALL NO.2 TIMING BELT COVER (See page EM–19)

23. INSTALL AIR INTAKE CHAMBER STAY

(a) Install the air intake chamber stay with the 2 bolts.
Torque: 40 N·m (400 kgf·cm, 30 ft·lbf)
(b) Install the No.1 throttle cable clamp with the 2 bolts.

24. CONNECT HOSES

(a) Connect the fuel return hose.
(b) Connect the fuel inlet hose.
(c) Connect the brake booster vacuum hose.
(d) Connect the EVAP hose.
(e) 4WD:
Connect the A.D.D. vacuum hose.

25. CONNECT CABLES

(a) A/T:
Connect the throttle cable.
(b) Connect the accelerator cable.
(c) w/ Cruise Control:
Connect the cruise control actuator cable.

26. INSTALL SPARK PLUGS AND HIGH–TENSION CORDS WITH IGNITION COILS (See page IG–7)

27. CONNECT HEATER HOSE

28. INSTALL AIR CLEANER ASSEMBLY

29. 4WD (Except California Spec.):
INSTALL FRONT EXHAUST PIPE (See page EM–107)

30. 2WD, 4WD (California Spec.):
INSTALL NO.1 EXHAUST PIPE (WITH TWC) (See page EM–107)

31. FILL WITH ENGINE COOLANT

32. START ENGINE AND CHECK FOR LEAKS

33. CHECK IGNITION TIMING (See page EM–9)

34. INSTALL ENGINE UNDER COVER

35. PERFORM ROAD TEST

Check for abnormal noise, shock, slippage, correct shift points and smooth operation.

36. RECHECK ENGINE COOLANT LEVEL

EM103–02

INSTALLATION

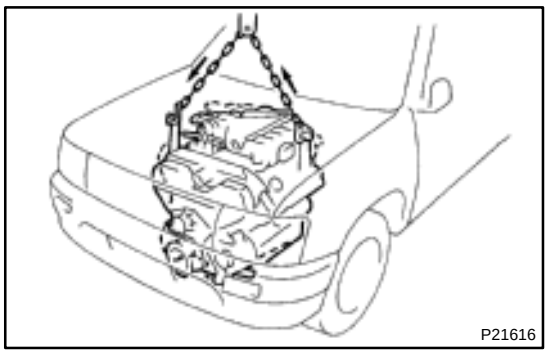

1. INSTALL ENGINE ASSEMBLY IN VEHICLE

(a) Attach the engine hoist chain to the engine hangers.
(b) Lower the engine assembly into the engine compartment.

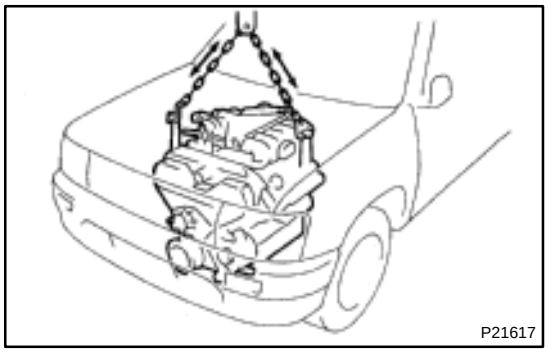

(c) Keep the engine level, and align the RH and LH mountings and body mountings.
(d) Attach the RH and LH mounting insulators to the body mountings, and temporarily install the 4 bolts and 4 nuts.

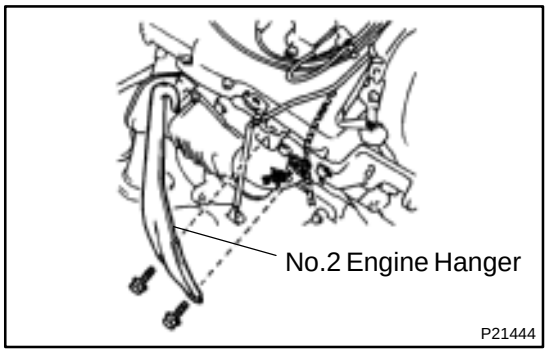

(e) Remove the engine chain hoist from the engine.
(f) Remove the 2 bolts and No.2 engine hanger.
(g) Install the bolt, and connect the A/C compressor wire.

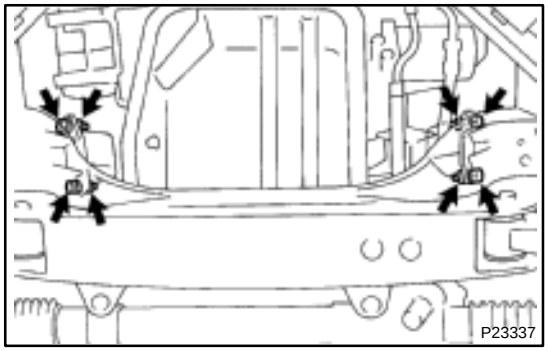

2. TIGHTEN RH AND LH ENGINE MOUNTING INSULATOR BOLTS AND NUTS

Tighten the 4 bolts and nuts holding the mounting insulators to the body mountings.

Torque: 38 N·m (387 kgf·cm, 28 ft·lbf)

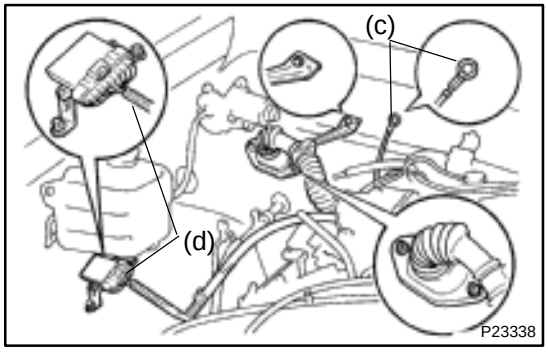

3. CONNECT ENGINE WIRE TO CABIN

(a) Push in the engine wire through the cowl panel.
(b) Install the bolt and 2 nuts.
(c) Connect the ground strap.
(d) Connect the igniter connector.

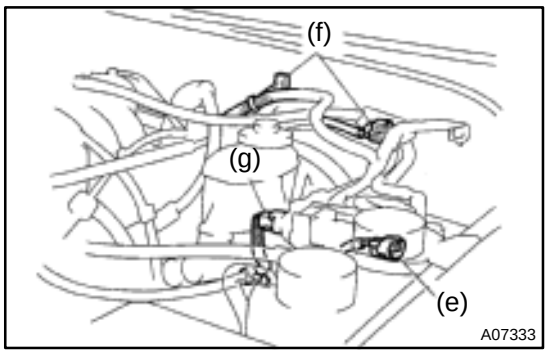

(e) Connect the VSV connector for the EVAP.
(f) Connect the vapor pressure sensor connector and clamp.
(g) Connect the VSV connector for the vapor pressure sensor.
(h) Connect the 4 connectors to the ECM.
(i) Install the ECM with the 2 bolts.

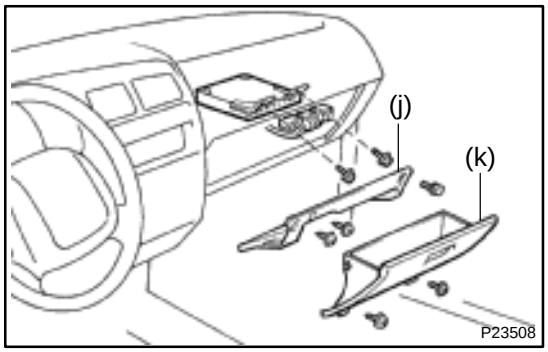

(j) Install the lower finish No.2 panel.
(k) Install the glove compartment.

4. CONNECT GENERATOR WIRE (See page CH–15)

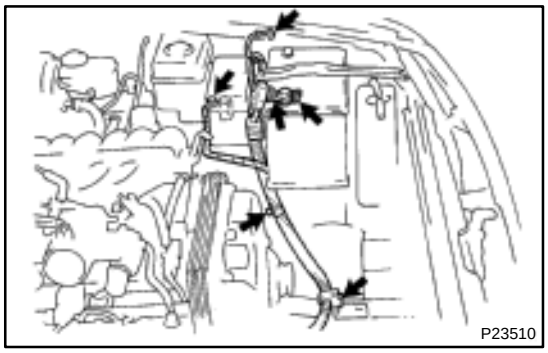

5. CONNECT STARTER WIRE AND CONNECTORS

(a) Connect the 3 starter wire clamps and connector.
(b) Install the 2 nuts, and connect the positive (+) terminal cable to the battery.
(c) Connect the ground strap with the bolt.
(d) Connect the wire to the relay block No.2 with the nut.

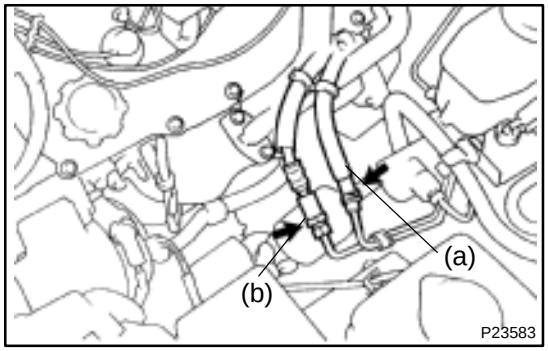

6. CONNECT HOSES

(a) Connect the fuel return hose.
(b) Connect the fuel inlet hose. (See page SF–1)

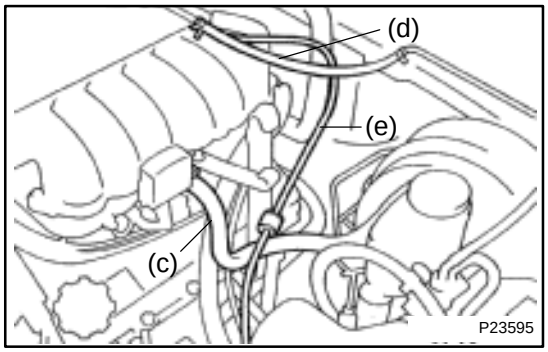

(c) Connect the brake booster vacuum hose.
(d) Connect the EVAP hose.
(e) Connect the A.D.D. vacuum hose.

7. CONNECT HEATER HOSES

8. CONNECT CABLES

(a) Connect the accelerator cable.
(b) A/T:
Connect the throttle cable.
(c) w/ Cruise Control:
Connect the cruise control actuator cable.

9. **INSTALL FAN WITH FLUID COUPLING AND FAN PULLEYS**
10. **INSTALL RADIATOR ASSEMBLY (See page CO–19)**
11. **INSTALL AIR CLEANER ASSEMBLY**
12. **FILL WITH ENGINE OIL**
13. **FILL WITH ENGINE COOLANT**
14. **INSTALL ENGINE UNDER COVER**
15. **INSTALL TRANSMISSION**
    (W59 M/T: See page MT–12)
    (R150F M/T: See page MT–11)
    (A340F: See page AT–38)
16. **INSTALL HOOD**
17. **PERFORM ROAD TEST**

Check for abnormal noise, shock, slippage, correct shift points and smooth operation.

18. **RECHECK ENGINE COOLANT AND ENGINE OIL LEVELS**

EM0ZY–02

REASSEMBLY

HINT:

- Thoroughly clean all parts to be assembled.
- Before installing the parts, apply new engine oil to all sliding and rotating surfaces.
- Replace all gaskets and oil seals with new ones.

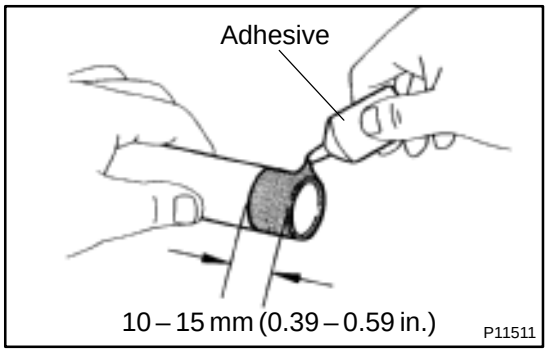

1. INSTALL SPARK PLUG TUBES

HINT:

When using a new cylinder head, spark plug tubes must be installed.

(a) Apply adhesive to the end of a spark plug tube.
Adhesive:
Part No. 08833–00070, THREE BOND 1324 or equivalent

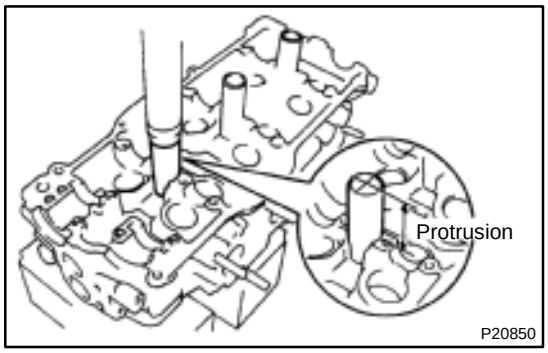

(b) Using a press, press in the spark plug tube until there is 49.0 – 49.4 mm (1.929 – 1.945 in.) protruding from the camshaft bearing cap installation surface of the cylinder head.

NOTICE:
Avoid pressing the spark plug tube in too far by measuring the amount of the protrusion while pressing.

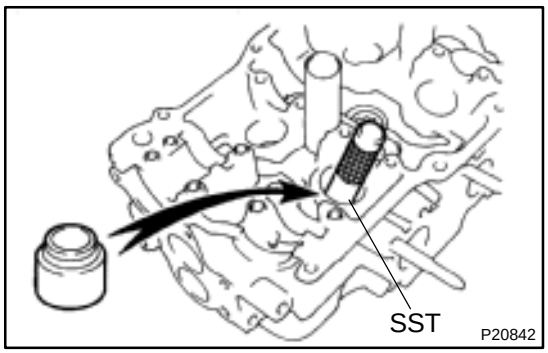

2. INSTALL VALVES

(a) Using SST, push in a new oil seal.
SST 09201–41020

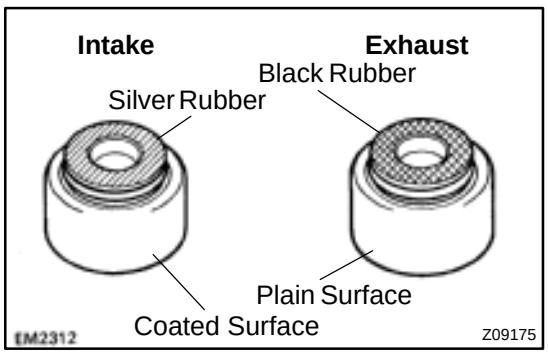

HINT:

The intake valve oil seal is silver and the exhaust valve oil seal is black.

(b) Install the valve, spring seat, valve spring and spring retainer.

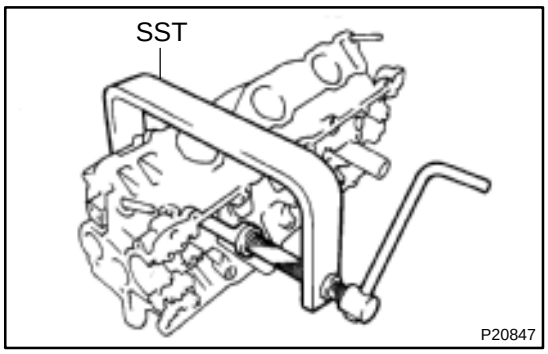

(c) Using SST, compress the valve spring and place the 2 keepers around the valve stem.
SST 09202–70020

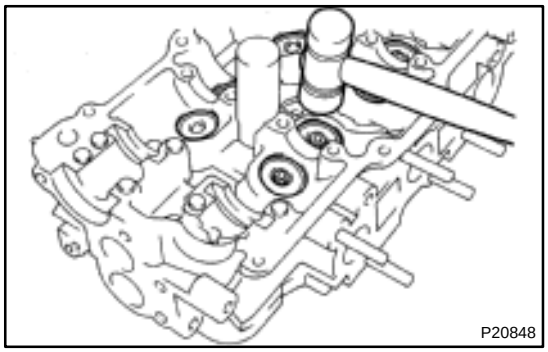

(d) Using a plastic–faced hammer, lightly tap the valve stem tip to ensure a proper fit.

3. INSTALL VALVE LIFTERS AND SHIMS

(a) Install the valve lifter and shim.

(b) Check that the valve lifter rotates smoothly by hand.

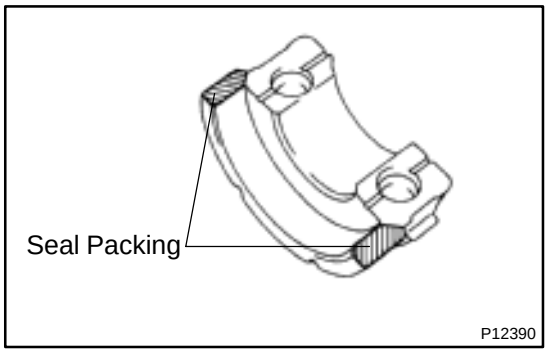

4. INSTALL CAMSHAFT HOUSING PLUGS

(a) Remove any old packing (FIPG) material.

(b) Apply seal packing to the bearing cap as shown in the illustration.
Seal packing: Part No. 08826–00080 or equivalent

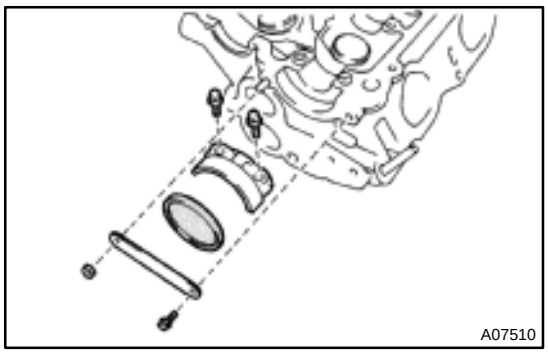

(c) Place a new housing plug in position on the cylinder head, facing the cup side inward.

(d) Install the camshaft bearing cap with the 2 bolts.
Torque: 16 N·m (160 kgf·cm, 12 ft·lbf)

(e) Install the rear plate with the bolt and nut.
Torque: 8 N·m (80 kgf·cm, 71 in.·lbf)

EM020–10

REASSEMBLY

HINT:

- Thoroughly clean all parts to be assembled.
- Before installing the parts, apply new engine oil to all sliding and rotating surfaces.
- Replace all gaskets, O–rings and oil seals with new parts.

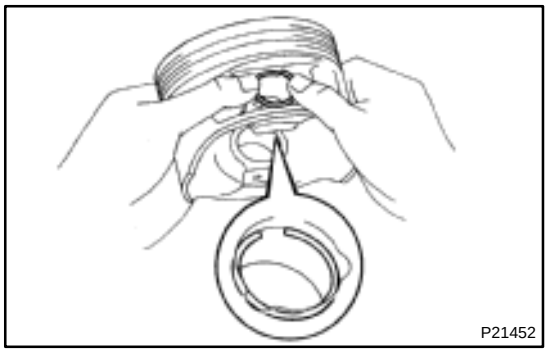

1. ASSEMBLE PISTON AND CONNECTING ROD

(a) Using a small screwdriver, install a new snap ring at one end of the piston pin hole.

HINT:

Be sure that end gap of the snap ring is not aligned with the pin hole cutout portion of the piston.

(b) Gradually heat the piston to about 60°C (140°F).

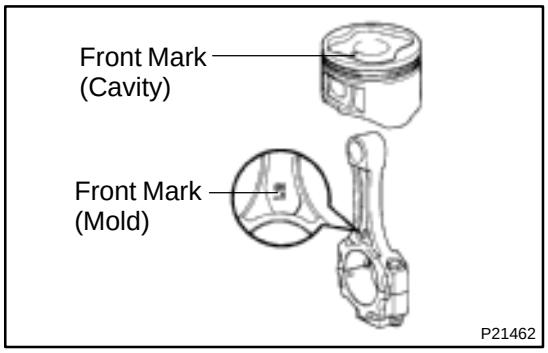

(c) Coat the piston pin with engine oil.

(d) Align the front marks of the piston and connecting rod, and push in the piston pin with your thumb.

(e) Using a small screwdriver, install a new snap ring on the other end of the piston pin hole.

HINT:

Be sure that end gap of the snap ring is not aligned with the pin hole cutout portion of the piston.

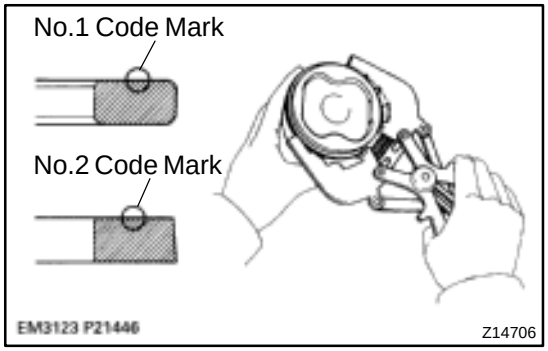

2. INSTALL PISTON RINGS

(a) Install the oil ring expander and 2 side rails by hand.

(b) Using a piston ring expander, install the 2 compression rings with the code mark facing upward.

Code mark:

No.1	1R or T
No.2	2R or T

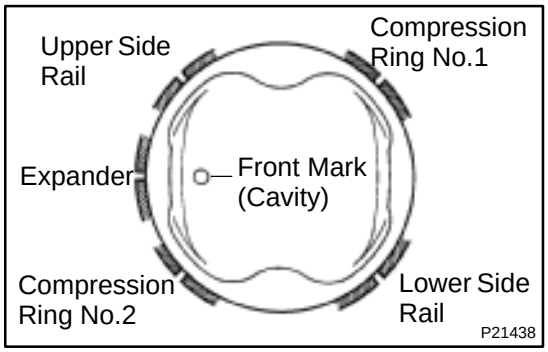

(c) Position the piston rings so that the ring ends are as shown.

NOTICE:

Do not align the ring ends.

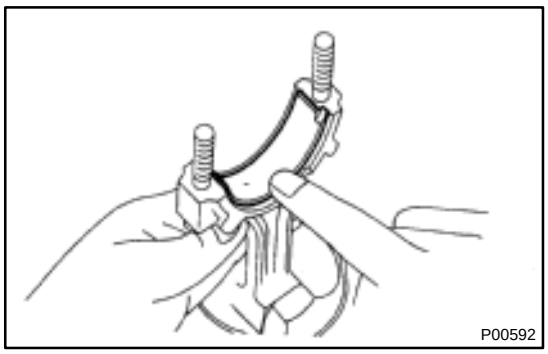
P00592

3. INSTALL BEARINGS

(a) Align the bearing claw with the groove of the connecting rod or connecting cap.

(b) Install the bearings in the connecting rod and connecting rod cap.

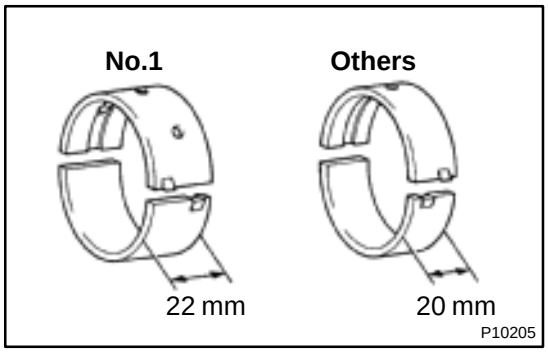

P10205

4. INSTALL MAIN BEARINGS

HINT:

- Main bearings come in widths of 20 mm (0.79 in.) and 22 mm (0.87 in.). Install the 22 mm (0.87 in.) bearings in the No.1 cylinder block journal position with the main bearing caps. Install the 20 mm (0.79 in.) bearings in the other positions.
- Upper bearings have an oil holes; lower bearings do not.

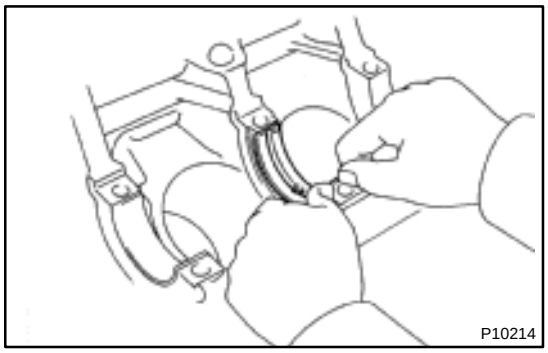
P10214

(a) Align the bearing claw with the claw groove of the main bearing cap or cylinder block.

(b) Install the bearings in the cylinder block and main bearing cap.

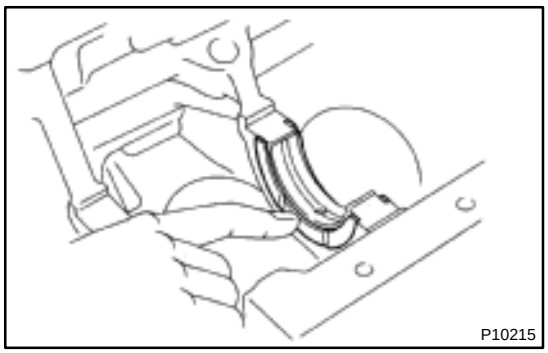
P10215

5. INSTALL UPPER THRUST WASHERS

Install the thrust washers under the No.2 journal position of the cylinder block with the oil grooves facing outward.

6. PLACE CRANKSHAFT ON CYLINDER BLOCK

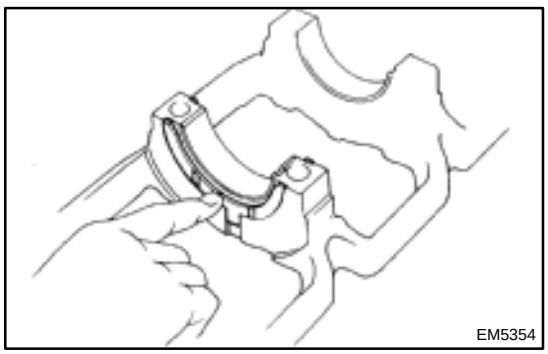
EM5354

7. PLACE MAIN BEARING CAP AND LOWER THRUST WASHERS ON CYLINDER BLOCK

(a) Install the thrust washers on the No.2 journal position of the bearing cap with the grooves facing outward.

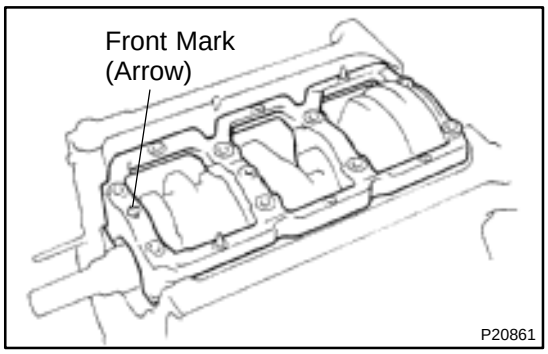

(b) Install the main bearing cap with the front mark facing forward.

8. INSTALL MAIN BEARING CAP BOLTS

HINT:

- The main bearing cap bolts are tightened in 2 progressive steps (steps (b) and (d)).
- If any main bearing cap bolt is broken or deformed, replace it.

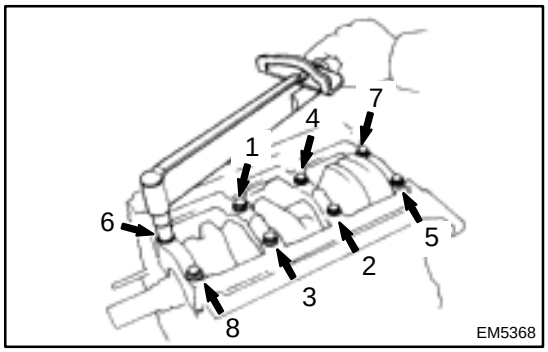

(a) Apply a light coat of engine oil on the threads and under the heads of the main bearing cap bolts.

(b) Install and uniformly tighten the 8 main bearing cap bolts in several passes, in the sequence shown.

Torque: 61 N·m (625 kgf·cm, 45 ft·lbf)

If any one of the main bearing cap bolts does not meet the torque specification, replace the cap bolt.

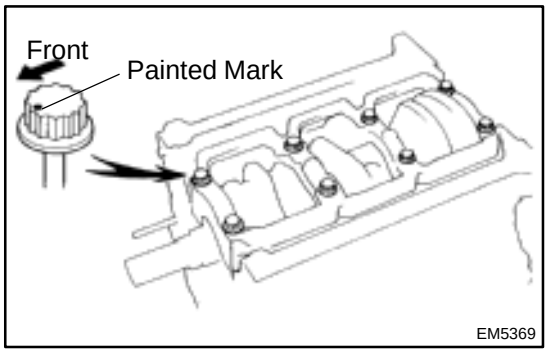

(c) Mark the front of the main bearing cap bolt with paint.

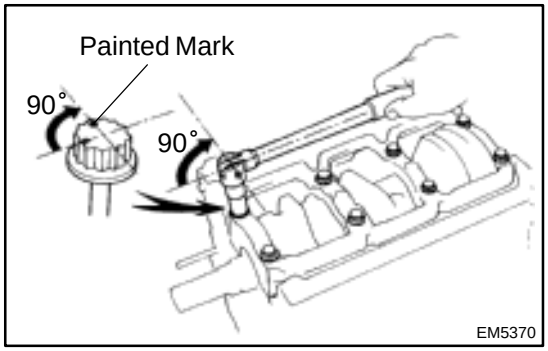

(d) Retighten the main bearing cap bolts by 90° in the numerical order shown.

(e) Check that the painted mark is now at a 90° angle to the front.

(f) Check that the crankshaft turns smoothly.

(g) Check the crankshaft thrust clearance.
(See page EM–83)

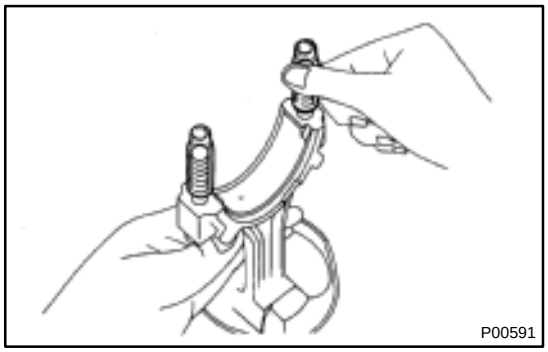

9. INSTALL PISTON AND CONNECTING ROD ASSEMBLIES

(a) Cover the connecting rod bolts with a short piece of hose to protect the crankshaft from damage.

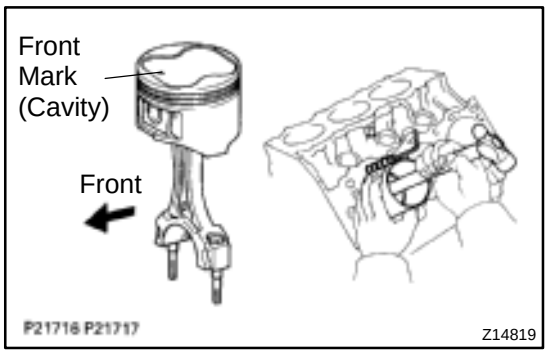

(b) Using a piston ring compressor, push the correctly numbered piston and connecting rod assemblies into each cylinder with the front mark of the piston facing forward.

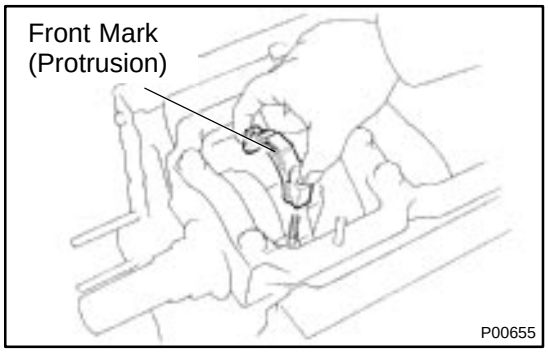

10. PLACE CONNECTING ROD CAP ON CONNECTING ROD

(a) Match the numbered connecting rod cap with the connecting rod.

(b) Install the connecting rod cap with the front mark facing forward.

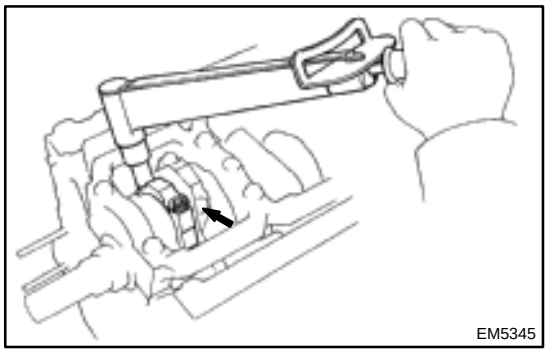

11. INSTALL CONNECTING ROD CAP NUTS

HINT:

- The connecting rod cap nuts are tightened in 2 progressive steps (steps (b) and (d)).
- If any connecting rod bolt is broken or deformed, replace it.

(a) Apply a light of engine oil on the threads and under the nuts of the connecting rod cap.

(b) Install and alternately tighten the nuts of the connecting rod cap in several passes.

Torque: 25 N·m (250 kgf·cm, 18 ft·lbf)

If any one of the connecting rod cap nuts does not meet the torque specification, replace the cap nut.

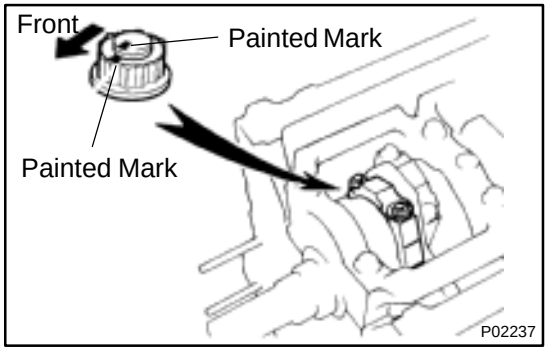

(c) Mark the front of the connecting rod cap nut and bolt with paint.

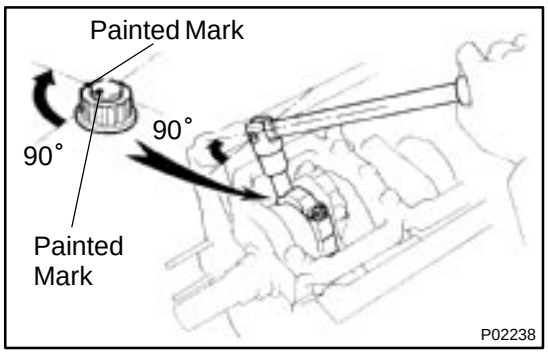

(d) Retighten the connecting rod cap nuts 90˚ as shown.
(e) Check that the painted mark is now at a 90˚ angle to the front.
(f) Check that the crankshaft turns smoothly.
(g) Check the connecting rod thrust clearance.
(See page EM–83)

12. INSTALL REAR OIL SEAL RETAINER

(a) Remove any old packing (FIPG) material and be careful not to drop any oil on the contact surfaces of the retainer and cylinder block.

- Using a razor blade and gasket scraper, remove all the old packing (FIPG) material from the gasket surfaces and sealing groove.
- Thoroughly clean all components to remove all the loose material.
- Using a non–residue solvent, clean both sealing surfaces.

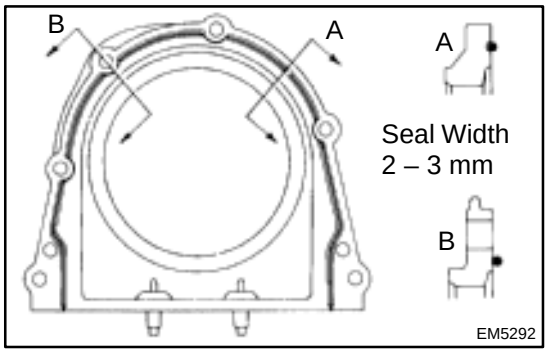

(b) Apply seal packing to the oil seal retainer as shown in the illustration.
Seal packing: Part No.08826–00080 or equivalent

- Install a nozzle that has been cut to a 2 – 3 mm (0.08 – 0.12 in.) opening.
- Parts must be assembled within 5 minutes of application. Otherwise the material must be removed and reapplied.
- Immediately remove nozzle from the tube and reinstall cap.

(c) Install the oil seal retainer with the 6 bolts.
Torque: 8 N·m (80 kgf·cm, 71 in.·lbf)

13. INSTALL OIL PUMP (See page LU–14)
14. w/Oil Cooler:
INSTALL OIL COOLER (See page LU–20)
15. INSTALL COOLANT DRAIN COCK
Torque: 39 N·m (400 kgf·cm, 29 ft·lbf)
16. INSTALL RH AND LH ENGINE MOUNTING BRACKETS
Torque: 44 N·m (440 kgf·cm, 32 ft·lbf)
17. INSTALL OIL FILTER UNION
Torque: 25 N·m (250 kgf·cm, 18 ft·lbf)
18. INSTALL OIL FILTER (See page LU–2)

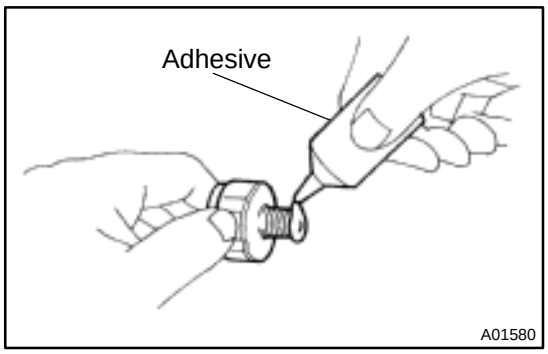

19. INSTALL OIL PRESSURE SWITCH

(a) Apply adhesive to 2 or 3 threads of the oil pressure switch.
Adhesive:
Part No. 08833–00080, THREE BOND 1344, LOCTITE 242 or equivalent

(b) Using SST, install the oil pressure switch.
SST 09816–30010
Torque: 15 N·m (150 kgf·cm, 11 ft·lbf)

20. INSTALL GENERATOR ADJUSTING BAR
Torque: 42 N·m (420 kgf·cm, 31 ft·lbf)

21. INSTALL WATER PUMP (See page CO–8)

22. INSTALL KNOCK SENSORS (See page SF–51)

23. INSTALL NO.2 IDLER PULLEY BRACKET
Torque: 38 N·m (380 kgf·cm, 28 ft·lbf)

24. INSTALL WATER BYPASS PIPE WITH KNOCK SENSOR WIRE

(a) Remove any old packing (FIPG) material and be careful not to drop any oil on the contact surfaces of the bypass and cylinder block.
- Using a razor blade and gasket scraper, remove all the old packing (FIPG) material from the gasket surfaces and sealing groove.
- Thoroughly clean all components to remove all the loose material.
- Using a non–residue solvent, clean both sealing surfaces.

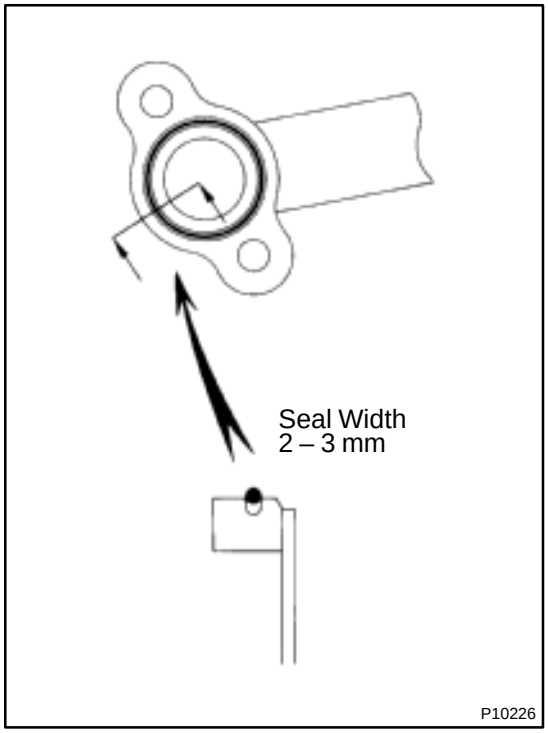

(b) Apply seal packing to the groove of the bypass pipe.
Seal packing: Part No. 08826–00100 or equivalent
- Install a nozzle that has been cut to a 2 – 3 mm (0.08 – 0.12 in.) opening.

HINT:
Avoid applying an excessive amount to the surface.
- Parts must be assembled within 5 minutes of application. Otherwise the material must be removed and reapplied.
- Immediately remove nozzle from the tube and reinstall cap.

(c) Install the bypass pipe with the 2 bolts and nut.
Torque: 8.5 N·m (85 kgf·cm, 75 in.·lbf)

(d) Connect the 2 knock sensor connectors.

25. INSTALL CYLINDER HEADS (See page EM–53)

26. INSTALL PULLEYS AND TIMING BELT (See page EM–19)

27. REMOVE ENGINE STAND

28. INSTALL REAR END PLATE
Torque: 7.5 N·m (75 kgf·cm, 66 in.·lbf)

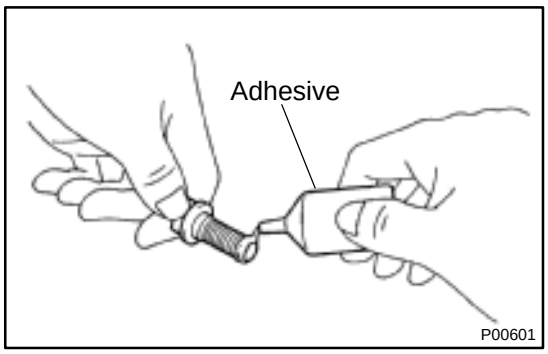

29. A/T:
INSTALL DRIVE PLATE

(a) Apply adhesive to 2 or 3 threads of the mounting bolt end.
Adhesive:
Part No. 08833–00070, THREE BOND 1324 or equivalent

(b) Install the front spacer, drive plate and rear spacer on the crankshaft.

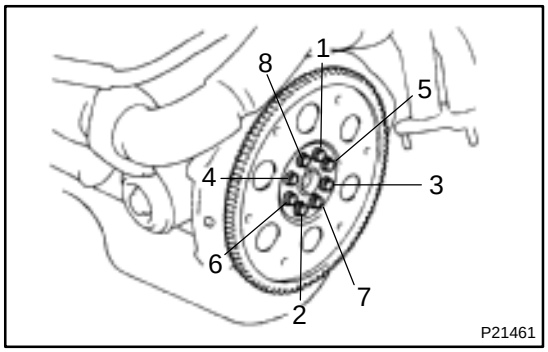

(c) Install and uniformly tighten the 8 mounting bolts in several passes, in the sequence shown.
Torque: 83 N·m (850 kgf·cm, 61 ft·lbf)

30. M/T:
INSTALL FLYWHEEL (See step 29)
Torque: 85 N·m (850 kgf·cm, 63 ft·lbf)

EM01I–09

REMOVAL

1. REMOVE ENGINE UNDER COVER

2. DRAIN ENGINE COOLANT

3. DISCONNECT UPPER RADIATOR HOSE

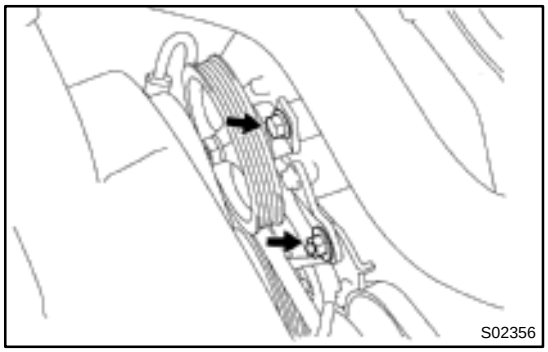

4. DISCONNECT PS PUMP FROM ENGINE

(a) Disconnect the 2 PS air hoses from the air intake chamber and resonator.

(b) Remove the bolt holding the PS pressure tube clamp to the frame.

(c) Remove the drive belt. (See page SR–3)

(d) Remove the bolt and nut, and disconnect the PS pump from the engine.

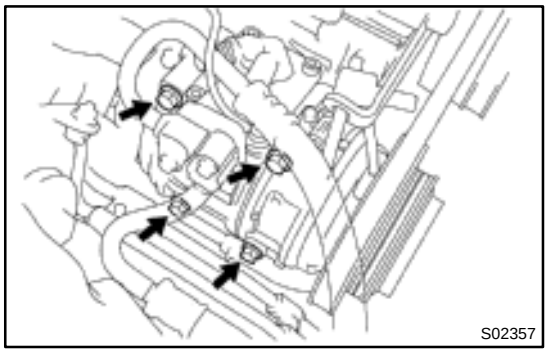

5. DISCONNECT A/C COMPRESSOR FROM ENGINE

(a) Disconnect the A/C compressor connector.

(b) Remove the drive belt. (See page AC–17)

(c) Remove the 4 bolts, and disconnect the A/C compressor from the engine.

6. LOOSEN FAN WITH FLUID COUPLING AND FAN PULLEYS

7. REMOVE DRIVE BELT FOR GENERATOR (See page CH–6)

8. REMOVE NO.2 FAN SHROUD

9. REMOVE FAN WITH FLUID COUPLING AND FAN PULLEYS

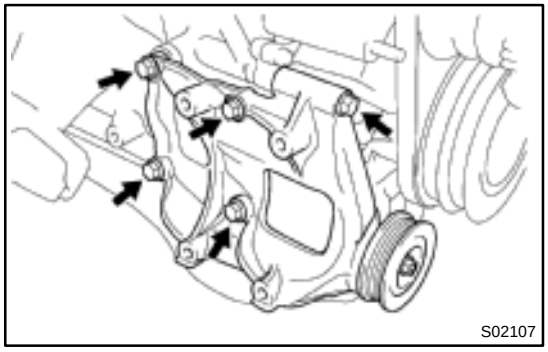

10. REMOVE A/C COMPRESSOR BRACKET

Remove the 5 bolts and A/C compressor bracket.

11. REMOVE OIL DIPSTICK AND GUIDE

Remove the bolt, oil dipstick, guide and O–ring.

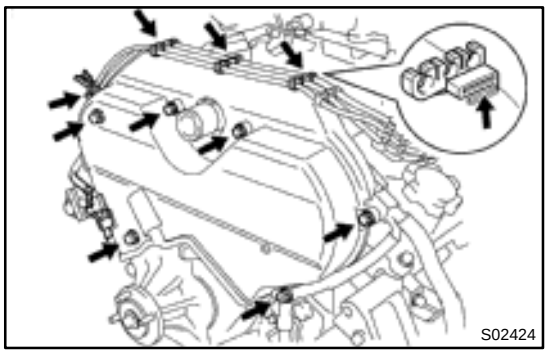

12. REMOVE NO.2 TIMING BELT COVER

(a) Disconnect the 4 high–tension cord clamps from the timing belt cover.
(b) Remove the 6 bolts and timing belt cover.
(c) Disconnect the camshaft position sensor connector.

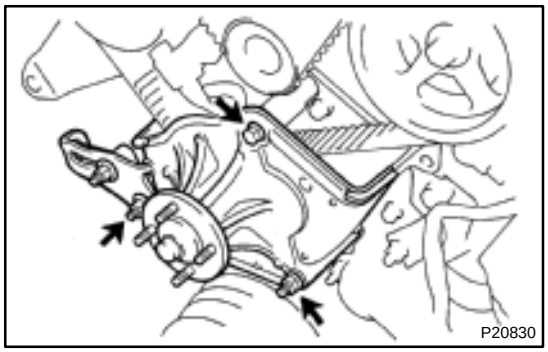

13. REMOVE FAN BRACKET

(a) Remove the nut and PS pump adjusting strut.
(b) Remove the bolt, nut and fan bracket.

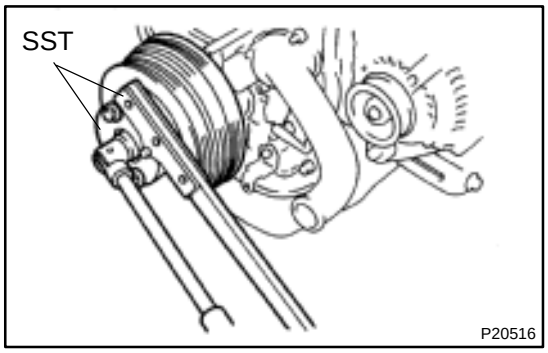

14. REMOVE CRANKSHAFT PULLEY

(a) Using SST, loosen the pulley bolt.
SST 09213–54015 (90119–08216), 09330–00021
(b) Remove the SST, pulley bolt and pulley.

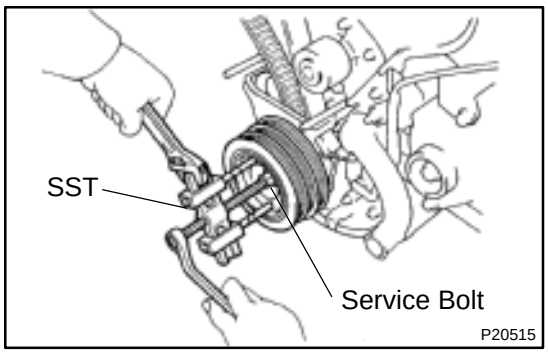

HINT:
If necessary, remove the pulley with SST and a service bolt.
SST 09950–50011 (09951–05010, 09952–05010, 09953–05020, 09954–05030)

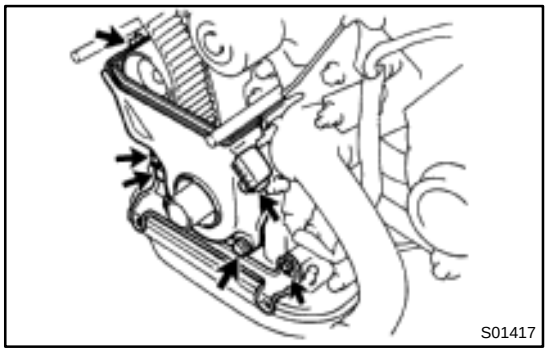

15. REMOVE STARTER WIRE BRACKET AND NO.1 TIMING BELT COVER

(a) Remove the 2 bolts and starter wire bracket.
(b) Remove the 4 bolts and timing belt cover.

16. REMOVE TIMING BELT GUIDE

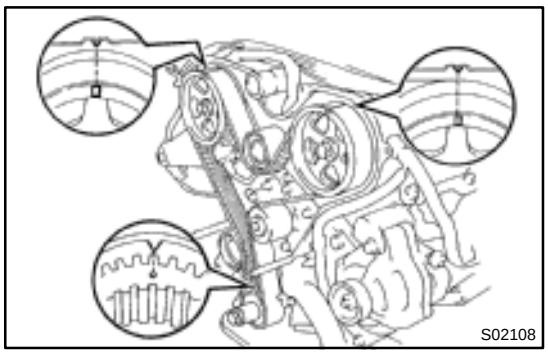

17. SET NO.1 CYLINDER AT TDC/COMPRESSION

(a) Temporarily install the crankshaft pulley bolt to the crankshaft.

(b) Turn the crankshaft, and align the timing marks of the crankshaft timing pulley and oil pump body.

NOTICE:

Always turn the crankshaft clockwise.

(c) Check that the timing marks of the camshaft timing pulleys and No.3 timing belt cover are aligned.

If not, turn the crankshaft pulley 1 revolution (360˚).

(d) Remove the crankshaft pulley bolt.

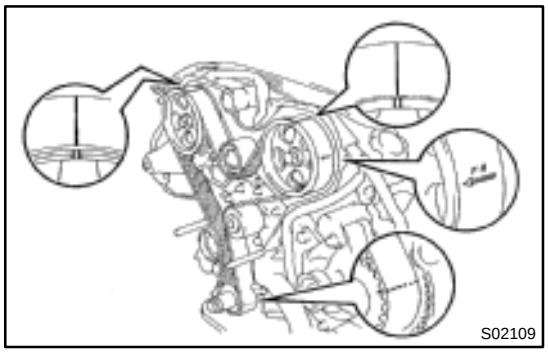

18. IF REUSING TIMING BELT, CHECK INSTALLATION MARKS ON TIMING BELT

Check that there are 3 installation marks and front mark on the timing belt.

If the installation and front marks have disappeared, before removing the timing belt, place 3 new installation marks on the timing belt to match the timing marks of the timing pulleys, and place a new front mark on the timing belt.

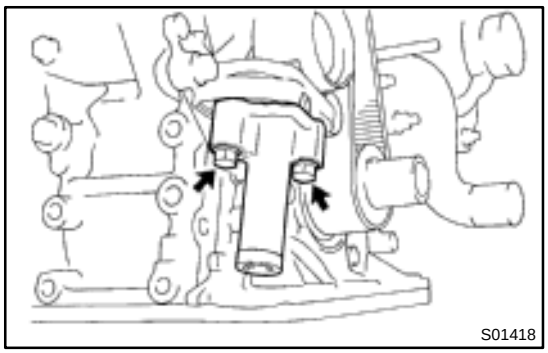

19. REMOVE TIMING BELT TENSIONER

Alternately loosen the 2 bolts, and remove them, the belt tensioner and dust boot.

20. REMOVE TIMING BELT

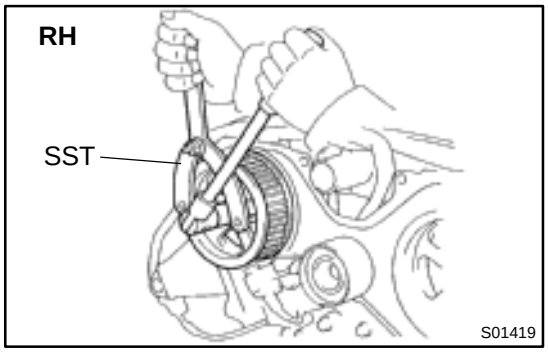

21. REMOVE RH CAMSHAFT TIMING PULLEY

(a) Using SST, loosen the pulley bolt.
SST 09960–10010 (09962–01000, 09963–01000)

(b) Remove the bolt, knock pin and timing pulley.

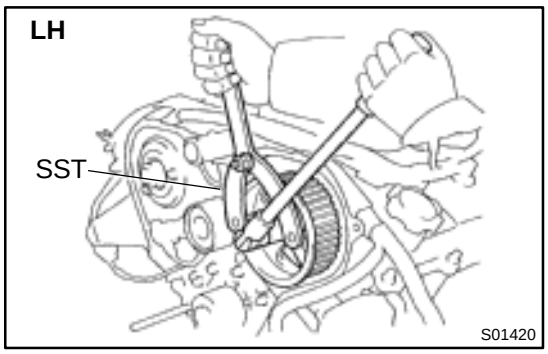

22. REMOVE LH CAMSHAFT TIMING PULLEY

(a) Using SST, loosen the pulley bolt.
SST 09960–10010 (09962–01000, 09963–01000)

(b) Remove the bolt, knock pin and timing pulley.

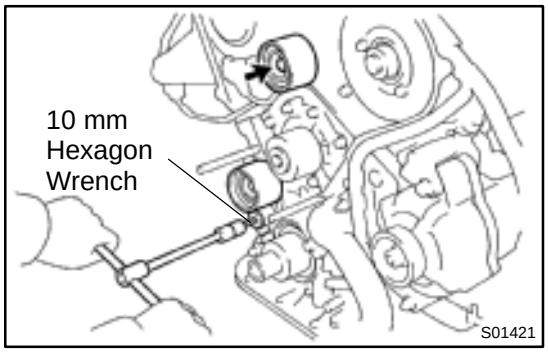

23. REMOVE NO.2 IDLER PULLEY

Remove the bolt and idler pulley.

24. REMOVE NO.1 IDLER PULLEY

Using a 10 mm hexagon wrench, remove the pivot bolt, idler pulley and plate washer.

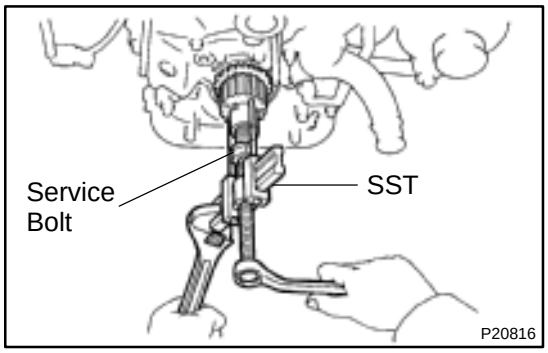

25. REMOVE CRANKSHAFT TIMING PULLEY

Remove the timing pulley.

HINT:

If the pulley cannot be removed by hand, use SST and a service bolt to remove the timing pulley.

SST 09950–50011 (09951–05010, 09952–05010, 09953–05020, 09954–05010)

EM16D–02

REMOVAL

1. REMOVE ENGINE UNDER COVER
2. DRAIN ENGINE COOLANT
3. 4WD (Except California Spec.):
   REMOVE FRONT EXHAUST PIPE (See page EM–107)
4. 2WD, 4WD (California Spec.):
   REMOVE NO.1 EXHAUST PIPE (WITH TWC)
   (See page EM–107)
5. DISCONNECT HEATER HOSE
6. REMOVE AIR CLEANER ASSEMBLY
7. REMOVE HIGH–TENSION CORDS WITH IGNITION COILS AND SPARK PLUGS (See page IG–7)

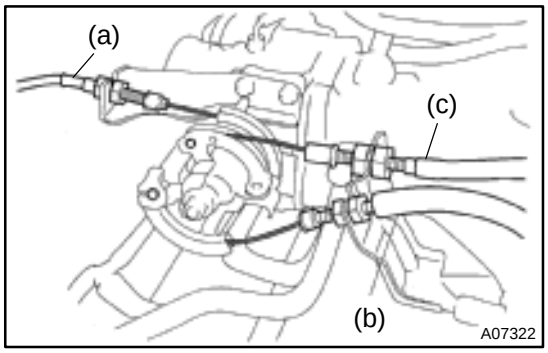

8. DISCONNECT CABLES

(a) w/ Cruise Control:
Disconnect the cruise control cable.

(b) Disconnect the accelerator cable.

(c) A/T:
Disconnect the throttle cable.

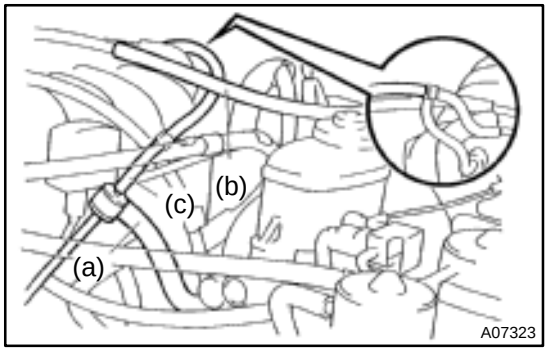

9. DISCONNECT HOSES

(a) Disconnect the brake booster hose.

(b) Disconnect the EVAP hose.

(c) 4WD:
Disconnect the A.D.D. vacuum hose.

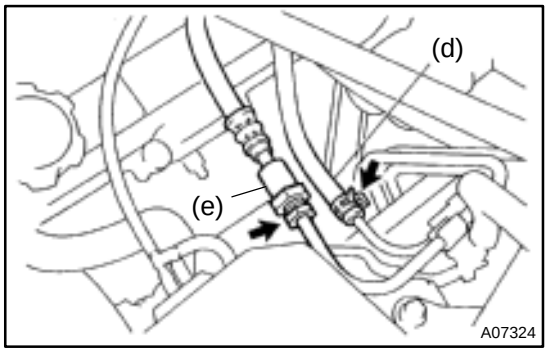

(d) Disconnect the fuel return hose.

(e) Disconnect the fuel inlet hose.

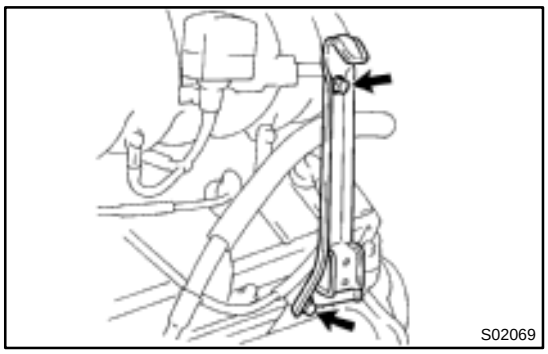

10. REMOVE INTAKE CHAMBER STAY

(a) Remove the 2 bolts and No.1 throttle cable clamp.

(b) Remove the 2 bolts and intake chamber stay.

11. REMOVE NO.2 TIMING BELT COVER

(See page EM–13)

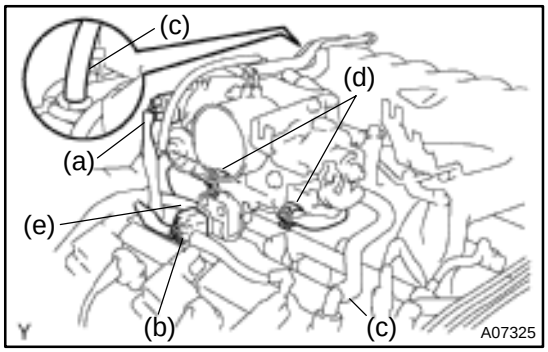

12. REMOVE AIR INTAKE CHAMBER ASSEMBLY

(a) Disconnect the throttle position sensor connector.

(b) Disconnect the IAC valve connector.

(c) Disconnect the 2 PCV hoses.

(d) Disconnect the 2 water bypass hoses.

(e) Disconnect the air assist hose from throttle body.

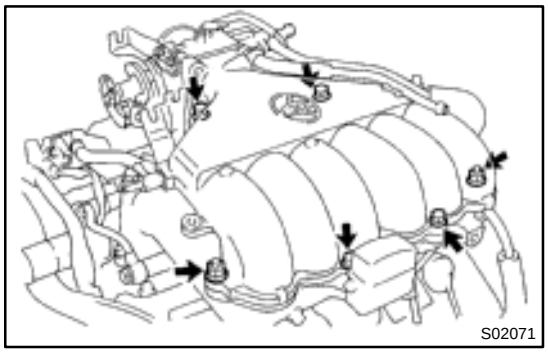

(f) Remove the 4 bolts, 2 nuts, the air intake chamber assembly and gasket.

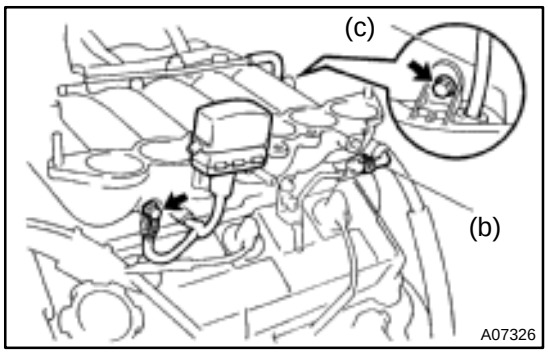

13. REMOVE INTAKE AIR CONNECTOR ASSEMBLY

(a) Remove the bolt and disconnect the engine wire.

(b) Disconnect the fuel return hose.

(c) Disconnect the vacuum sensing hose from the fuel pressure regulator.

(d) Remove the bolt and disconnect the ground strap from the intake air connector.

(e) Disconnect the DLC1 from the bracket.

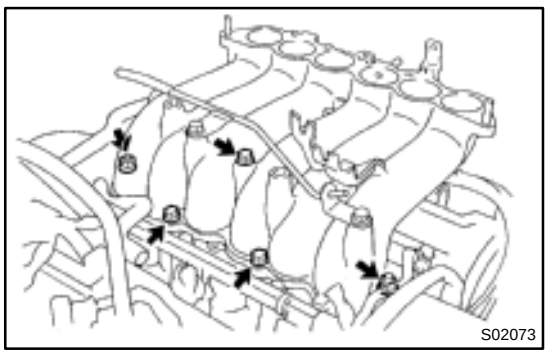

(f) Remove the 3 bolts, 2 nuts, the intake air connector assembly and gasket.

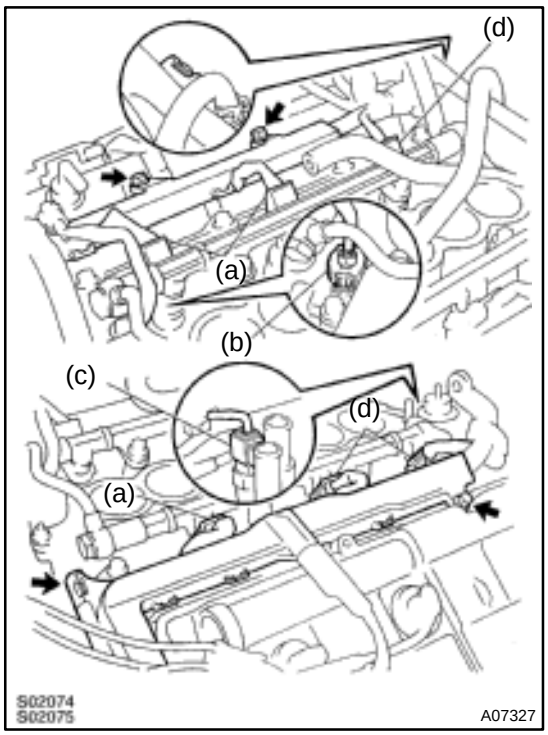

14. DISCONNECT ENGINE WIRE PROTECTOR

(a) Disconnect the 6 injector connectors.
(b) Disconnect the ECT sensor connector.
(c) Disconnect the ECT sender gauge connector.
(d) Disconnect the 2 engine wire clamps.
(e) Remove the 3 bolts, and disconnect the engine wire protector from the cylinder head.

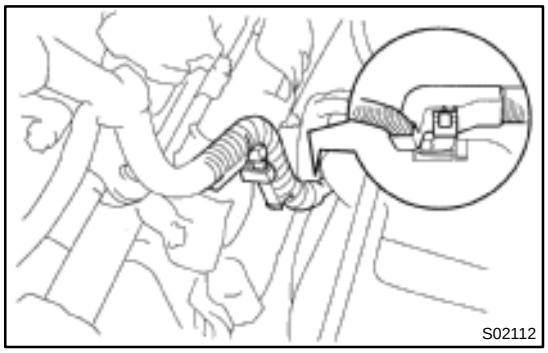

(f) Disconnect the 2 engine wire clamps from the engine.

15. REMOVE FUEL PRESSURE REGULATOR
(See page SF–15)

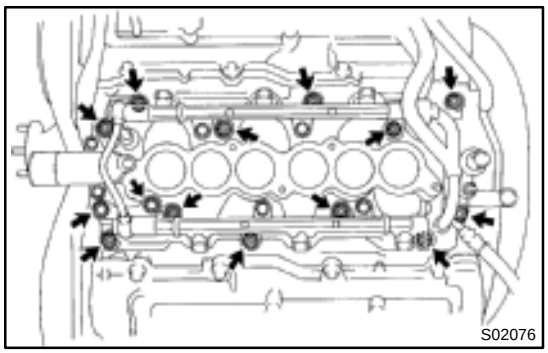

16. REMOVE INTAKE MANIFOLD ASSEMBLY

(a) Remove the 2 bolts and intake manifold stay.
(b) Remove the 8 bolts, 4 nuts, 4 plate washers, the intake manifold assembly and 2 gaskets.

17. REMOVE TIMING BELT (See page EM–13)

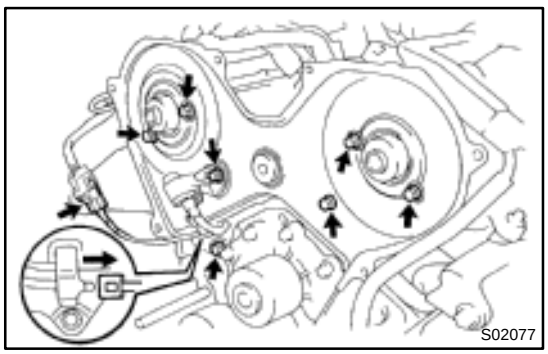

18. REMOVE CAMSHAFT POSITION SENSOR

(a) Disconnect the camshaft position sensor connector.
(b) Disconnect the clamp from the No.3 timing belt cover.
(c) Remove the bolt and camshaft position sensor.

19. REMOVE NO.3 TIMING BELT COVER

Remove the 6 bolts and timing belt cover.

20. REMOVE GENERATOR (See page CH–15)

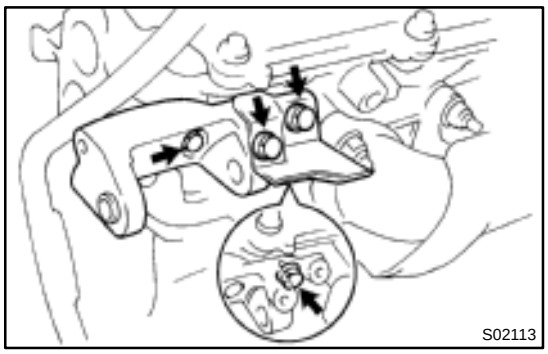

21. REMOVE GENERATOR BRACKET

(a) Remove the 2 bolts and generator bracket insulator.

(b) Remove the 2 bolts and generator bracket.

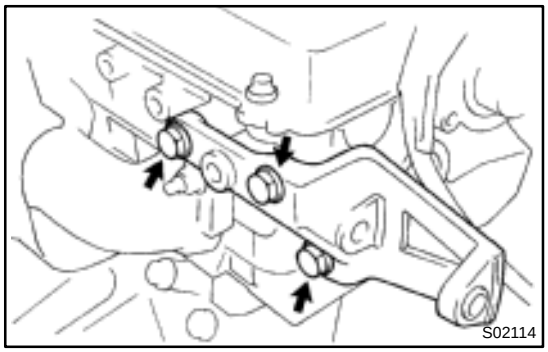

22. REMOVE PS PUMP BRACKET

Remove the 3 bolts and PS pump bracket.

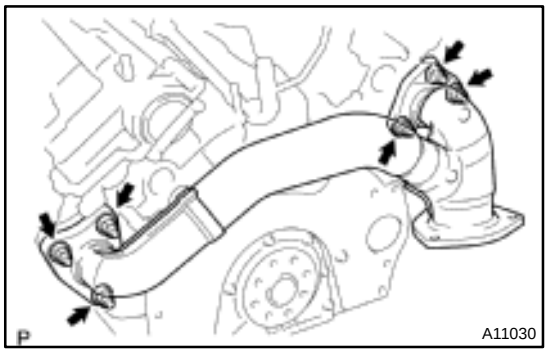

23. REMOVE EXHAUST CROSSOVER PIPE

Remove the 6 nuts, crossover pipe and 2 gaskets.

4WD (Except California Spec.)

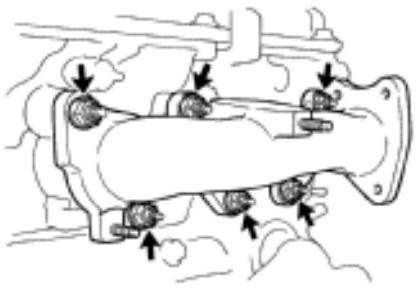

2WD, 4WD (California Spec.)

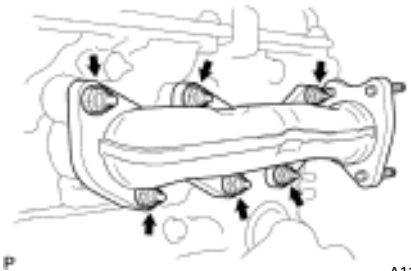

24. REMOVE EXHAUST MANIFOLDS

(a) 4WD (Except California Spec.):
Remove the 6 nuts and 2 exhaust manifold heat insulators.

(b) Remove the 12 nuts, 2 exhaust manifolds and 2 gaskets.

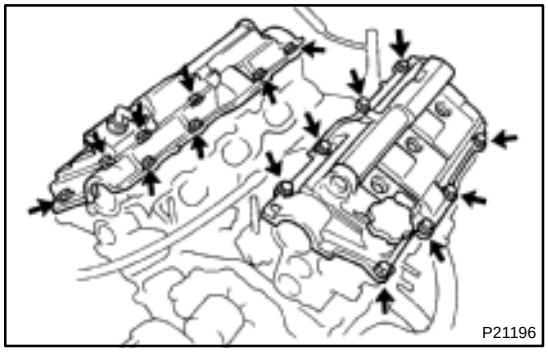

25. REMOVE CYLINDER HEAD COVERS

Remove the 8 bolts, seal washers, cylinder head cover and gasket. Remove the 2 cylinder head covers.

26. REMOVE CAMSHAFTS

NOTICE:

Since the thrust clearance of the camshaft is small, the camshaft must be kept level while it is being removed. If the camshaft is not kept level, the portion of the cylinder head receiving the shaft thrust may crack or be damaged, causing the camshaft to seize or break. To avoid this, these steps should be carried out.

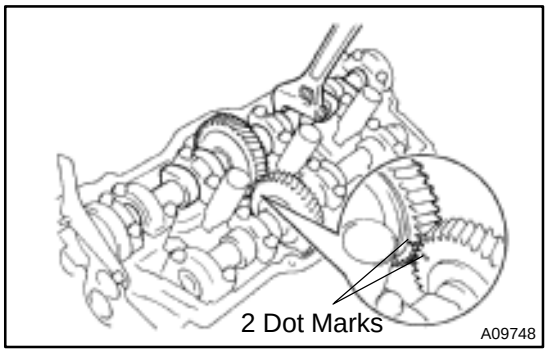

(a) Remove the exhaust camshaft of the RH cylinder head.

(1) Align the timing marks (2 dot marks) of the camshaft drive and driven gears by turning the camshaft with a wrench.

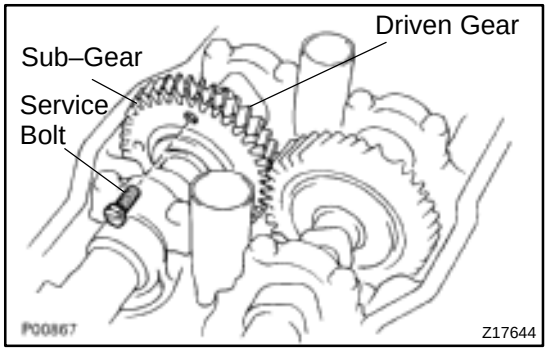

(2) Secure the exhaust camshaft sub–gear to the main gear with a service bolt.

Torque: 5.5 N·m (55 kgf·cm, 49 in.·lbf)

Recommended service bolt:

Thread diameter	6 mm
Thread pitch	1.0 mm
Bolt length	16 – 20 mm (0.63 – 0.79 in.)

NOTICE:

If the bolt is loose, the camshaft may tilt and cause damage in the camshaft and camshaft bearing cap.

HINT:

When removing the camshaft, make sure that the torsional spring force of the sub–gear has been eliminated by the above operation.

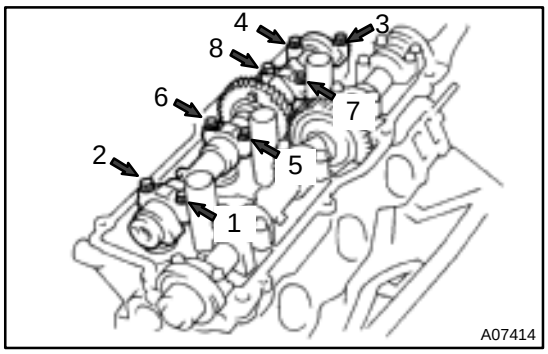

(3) Uniformly loosen and remove the 8 bearing cap bolts, in several passes, in the sequence shown.
(4) Remove the 4 bearing caps and exhaust camshaft.

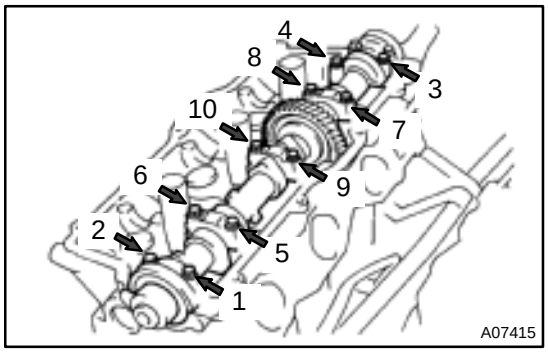

(b) Remove the intake camshaft of the RH cylinder head.
(1) Uniformly loosen and remove the 10 bearing cap bolts, in several passes, in the sequence shown.
(2) Remove the 5 bearing caps, oil seal and intake camshaft.

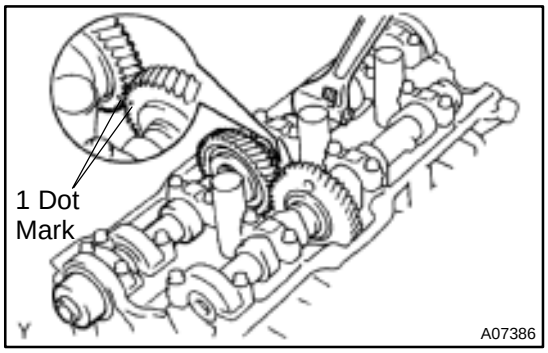

(c) Remove the exhaust camshaft of the LH cylinder head.
(1) Align the timing marks (1 dot mark) of the camshaft drive and driven gears by turning the camshaft with a wrench.

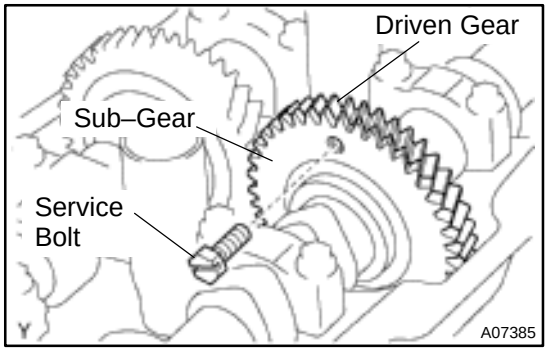

(2) Secure the exhaust camshaft sub–gear to the main gear with a service bolt.

Torque: 5.5 N·m (55 kgf·cm, 49 in.·lbf)

Recommended service bolt:

Thread diameter	6 mm
Thread pitch	1.0 mm
Bolt length	16 – 20 mm (0.63 – 0.79 in.)

NOTICE:

If the bolt is loose, the camshaft may tilt and cause damage in the camshaft and camshaft bearing cap.

HINT:

When removing the camshaft, make sure that the torsional spring force of the sub–gear has been eliminated by the above operation.

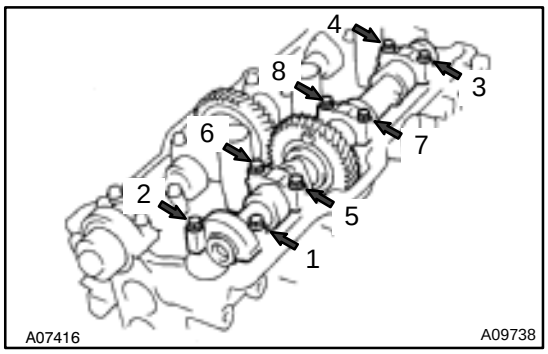

(3) Uniformly loosen and remove the 10 bearing cap bolts, in several passes, in the sequence shown.
(4) Remove the 4 bearing caps and exhaust camshaft.

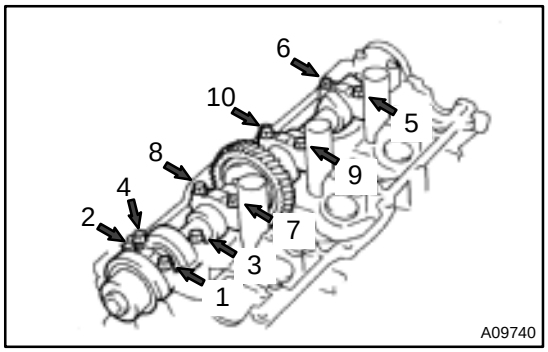

(d) Remove the intake camshaft of the LH cylinder head.
(1) Uniformly loosen and remove the 10 bearing cap bolts, in several passes, in the sequence shown.
(2) Remove the 5 bearing caps, oil seal and intake camshaft.

HINT:
- Arrange the camshafts in the correct order.
- Arrange the bearing caps in the correct order.

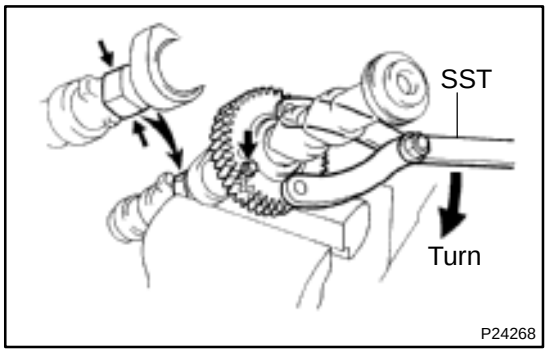

27. DISASSEMBLE EXHAUST CAMSHAFTS

(a) Mount the hexagonal wrench head portion of the camshaft in a vise.

NOTICE:

Be careful not to damage the camshaft.

(b) Using SST, turn the sub–gear clockwise and remove the service bolt.
SST 09960–10010 (09962–01000, 09963–00600)

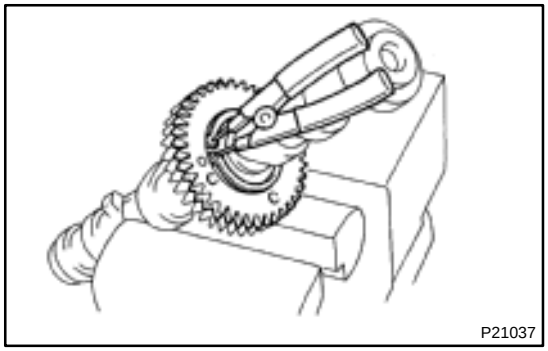

(c) Using snap ring pliers, remove the snap ring.
(d) Remove the wave washer, camshaft sub–gear and gear spring.

HINT:

Arrange the camshaft sub–gears and gear springs (RH and LH side).

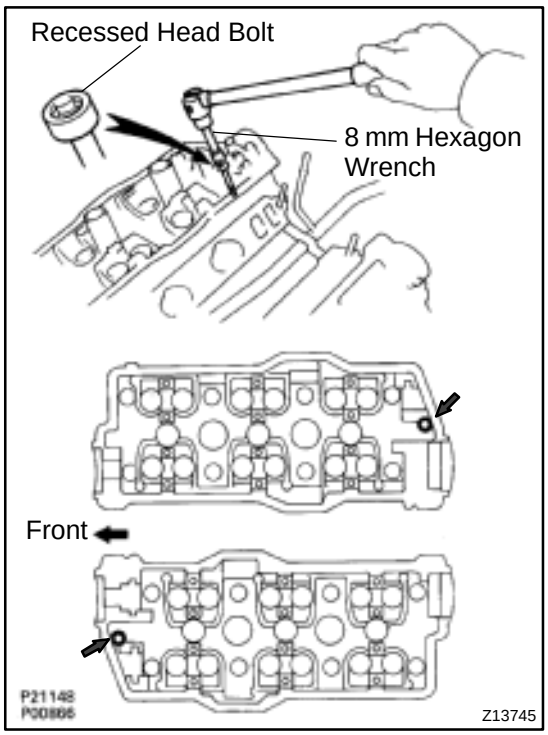

28. REMOVE CYLINDER HEADS

(a) Remove the bolt and disconnect the ground strap.

(b) Using an 8 mm hexagon wrench, remove the cylinder head (recessed head) bolt on each cylinder head, then repeat for the other side, as shown.

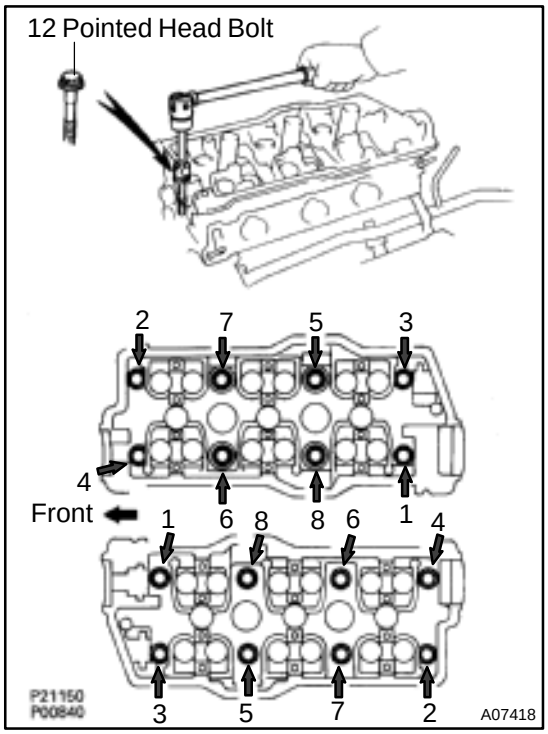

(c) Uniformly loosen and remove the 8 cylinder head (12 pointed head) bolts on each cylinder head, in several passes, in the sequence shown, then repeat for the other side, as shown. Remove the 16 cylinder head bolts and plate washers.

NOTICE:

Head warpage or cracking could result from removing bolts in an incorrect order.

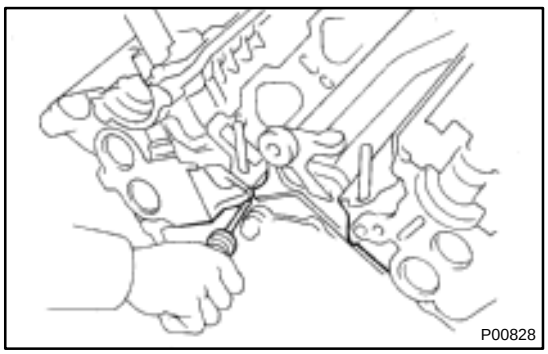

(d) Lift the cylinder head from the dowels on the cylinder block and place the 2 cylinder heads on wooden blocks on a bench.

HINT:

- If the cylinder head is difficult to lift off, pry between the cylinder head and cylinder block with a screwdriver.
- Arrange the cylinder heads in the correct order.

NOTICE:

Be careful not to damage the contact surfaces of the cylinder head and cylinder block.

REMOVAL

1. REMOVE TRANSMISSION
(W59 M/T: See page MT–7)
(R150F M/T: See page MT–4)
(A340F: See page AT–26)

EM102–02

2. REMOVE ENGINE UNDER COVER
3. DRAIN ENGINE COOLANT AND OIL
4. REMOVE HOOD
5. REMOVE RADIATOR ASSEMBLY (See page CO–16)
6. DISCONNECT HEATER HOSES
7. DISCONNECT CABLES
(a) Disconnect the accelerator cable.
(b) A/T:
Disconnect the throttle cable.
(c) w/ Cruise Control:
Disconnect the cruise control actuator cable.
8. REMOVE FAN WITH FLUID COUPLING AND FAN PULLEYS
9. REMOVE AIR CLEANER ASSEMBLY

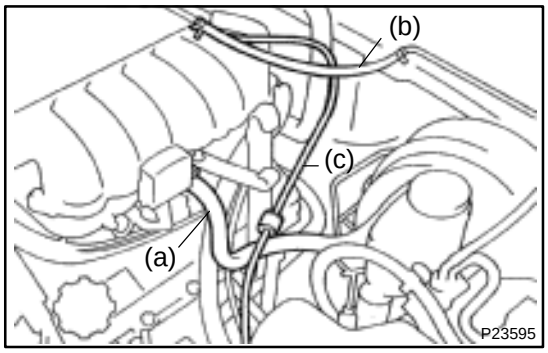

10. DISCONNECT HOSES
(a) Disconnect the brake booster vacuum hose.
(b) Disconnect the EVAP hose.
(c) Disconnect the A.D.D. vacuum hose.

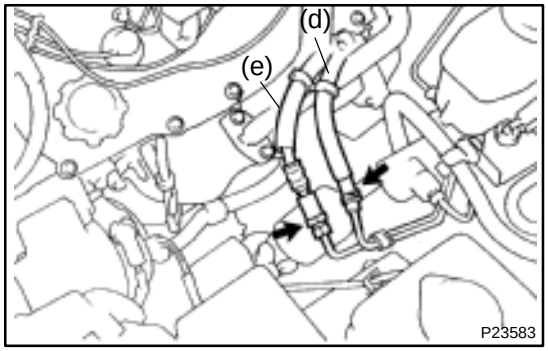

(d) Disconnect the fuel return hose.
(e) Disconnect the fuel inlet hose.

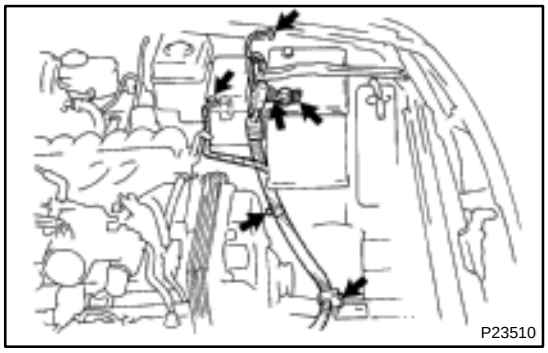

11. DISCONNECT STARTER WIRE AND CONNECTORS
(a) Remove the bolt, and disconnect the ground strap.
(b) Remove the 2 nut, and disconnect the positive (+) terminal cable from the battery.
(c) Disconnect the 2 starter the wire clamps and connector.
(d) Remove the nut, and disconnect the wire from the relay block No.2.
12. DISCONNECT GENERATOR WIRE
(See page CH–6)

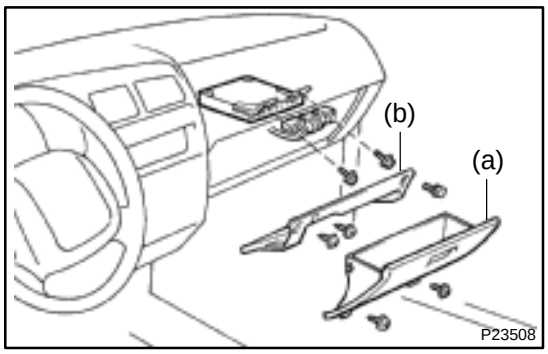

13. DISCONNECT ENGINE WIRE FROM CABIN

(a) Remove the glove compartment.
(b) Remove the lower finish No.2 panel.
(c) Remove the 2 bolts and ECM.
(d) Disconnect the 4 ECM connectors.

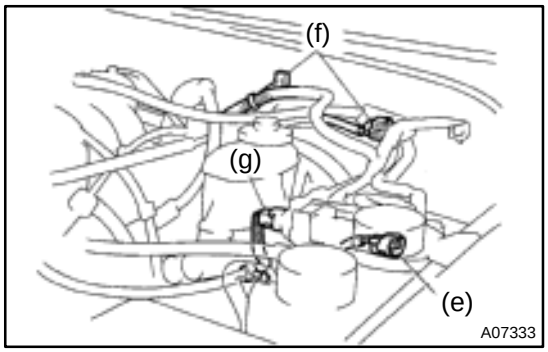

(e) Disconnect the VSV connector for the EVAP.
(f) Disconnect the vapor pressure sensor connector.
(g) Disconnect the VSV connector for the vapor pressure sensor.

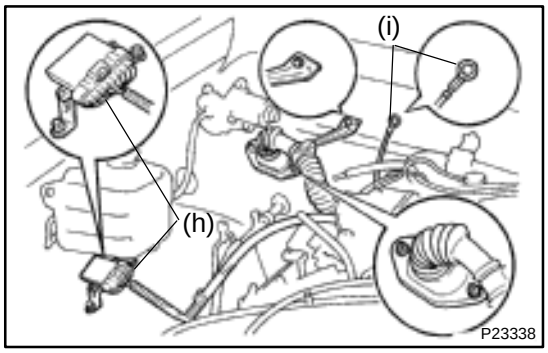

(h) Disconnect the igniter connector.
(i) Disconnect the ground strap.
(j) Remove the bolt and 2 nuts.
(k) Pull out the engine wire from the cabin.

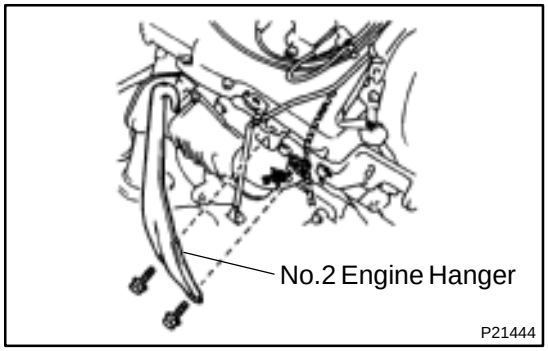

14. REMOVE ENGINE

(a) Remove the bolt and disconnect the A/C compressor wire clamp.
(b) Install a No.2 engine hanger in the correct direction.
Part No.:

No.2 Engine hanger	12282 – 62030
Bolt	91512 – 61020

Torque: 40 N·m (400 kgf·cm, 30 ft·lbf)

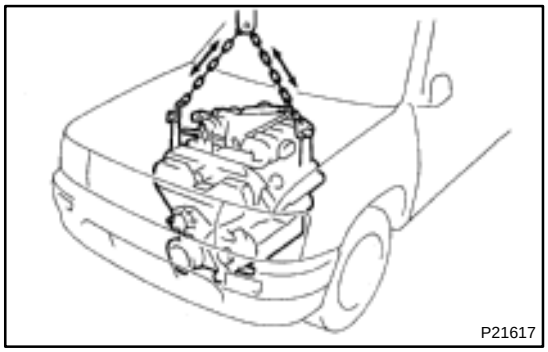

(c) Attach the engine hoist chain to the 2 engine hangers.

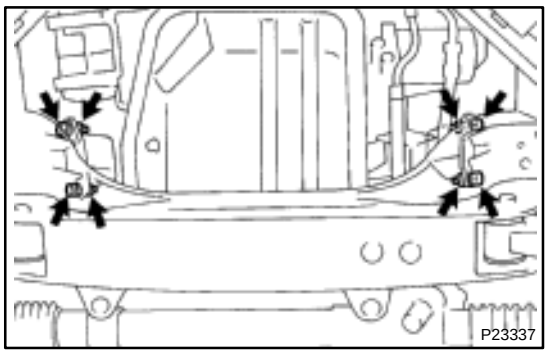

(d) Remove the 4 bolts and 4 nuts holding the engine front mounting insulators to the frame.

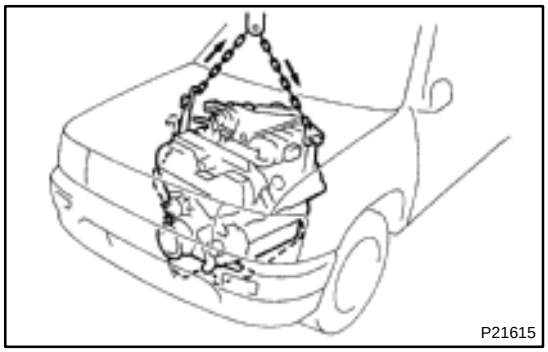

(e) Lift the engine out of the vehicle slowly and carefully.

NOTICE:

Make sure the engine is clear of all wiring and hoses.

(f) Place the engine assembly onto the stand.

EM106–02

REPLACEMENT

1. REPLACE CONNECTING ROD BUSHINGS

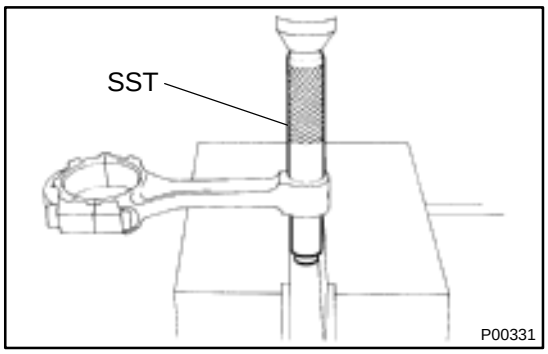

(a) Using SST and a press, press out the bushing.
SST 09222–30010

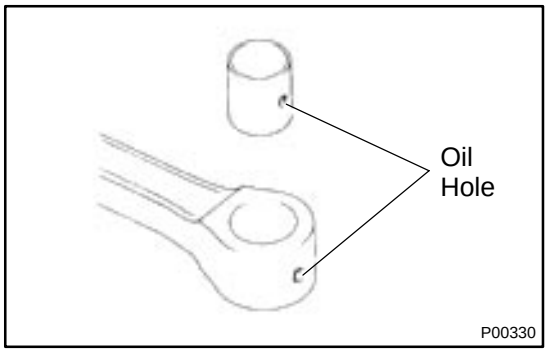

(b) Align the oil holes of a new bushing and the connecting rod.

(c) Using SST and a press, press in the bushing.
SST 09222–30010

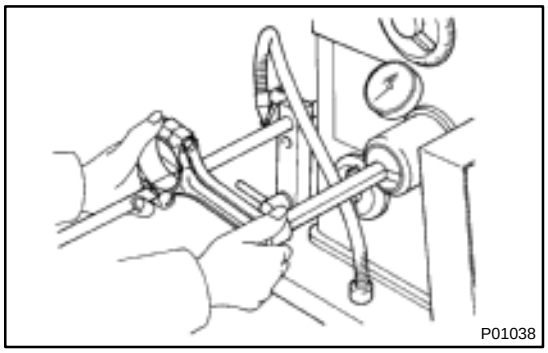

(d) Using a pin hole grinder, hone the bushing to obtain the standard specified clearance (See page EM–90) between the bushing and piston pin.

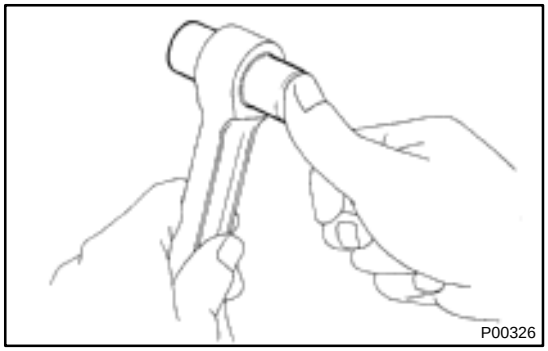

(e) Check the piston pin fit at normal room temperature. Coat the piston pin with engine oil, and push it into the connecting rod with your thumb.

2. REPLACE OVERSIZED (O/S) PISTONS

HINT:

- Bore all the 6 cylinders for the O/S piston outside diameter.
- Replace all the piston rings with ones to match the O/S pistons.

(a) Keep 6 new O/S pistons.
O/S 0.50 piston diameter:
93.856 – 93.886 mm (3.6951 – 3.6963 in.)

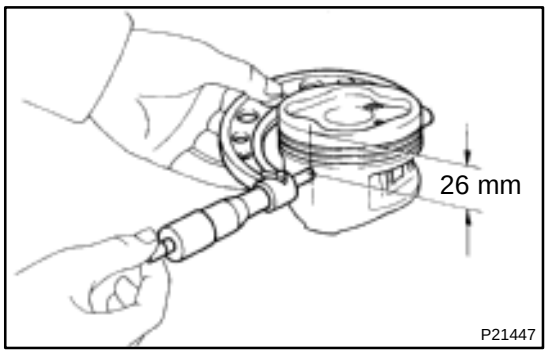

(b) Using a micrometer, measure the piston diameter at right angles to the piston pin center line, 26 mm (1.02 in.) from the piston head.

(c) Calculate the amount of each cylinder is to be rebored as follows:

Size to be rebored = P + C – H
P = Piston diameter
C = Piston oil clearance:
0.134 – 0.154 mm (0.0053 – 0.0060 in.)
H = Allowance for honing:
0.02 mm (0.0008 in.) or less

(d) Bore and hone cylinder to calculated dimensions
Maximum honing: 0.02 mm (0.0008 in.)

NOTICE:

Excess honing will destroy the finished roundness.

3. REPLACE CRANKSHAFT FRONT OIL SEAL
(See page LU–12)

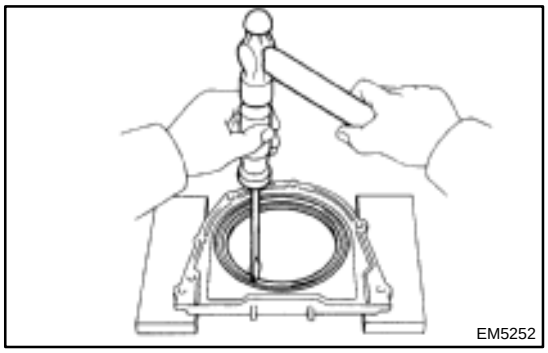

4. REPLACE CRANKSHAFT REAR OIL SEAL

HINT:

There are 2 methods ((a) and (b)) to replace the oil seal.

(a) If rear oil seal retainer is removed from the cylinder block:

(1) Using a screwdriver and hammer, tap out the oil seal.

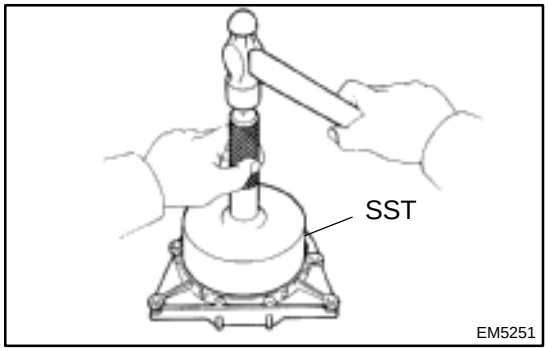

(2) Using SST and a hammer, tap in a new oil seal until its surface is flush with the rear oil seal retainer edge.

SST 09223–15030, 09950–70010 (09951–07150)

(3) Apply MP grease to the oil seal lip.

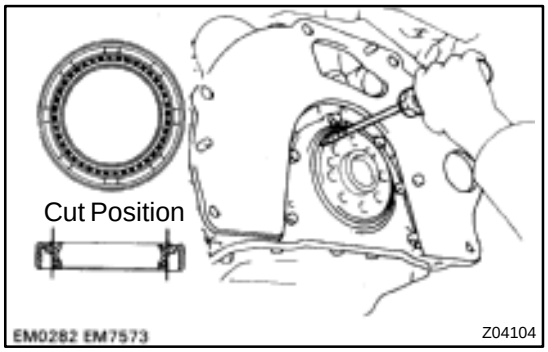

(b) If rear oil seal retainer is installed to the cylinder block:

(1) Using a knife, cut off the oil seal lip.

(2) Using a screwdriver, pry out the oil seal.

NOTICE:

Be careful not to damage the crankshaft. Tape the screwdriver tip.

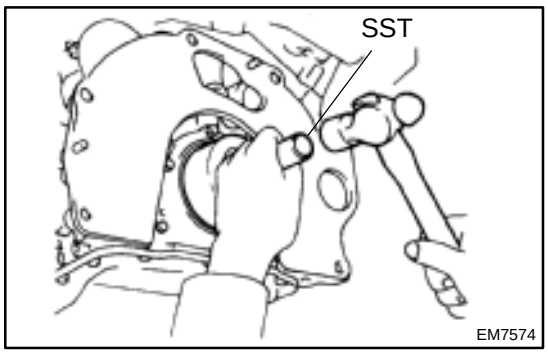

(3) Apply MP grease to a new oil seal lip.
(4) Using SST and a hammer, tap in the oil seal until its surface is flush with the rear oil seal retainer edge.

SST 09923–15030, 09950–70010 (09951–07150)

EM0ZX–02

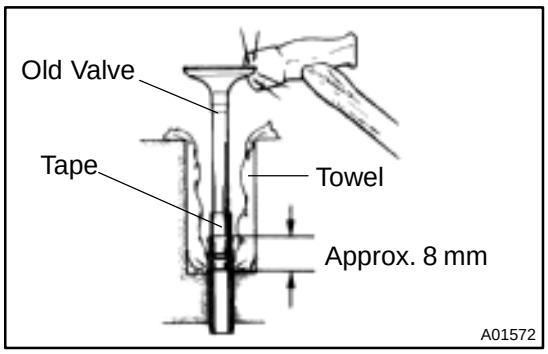

REPLACEMENT

1. REPLACE VALVE GUIDE BUSHINGS

(a) w/ Snap Ring:
Insert an old valve wrapped with tape into the valve guide bushing, and break off the valve guide bushing by hitting it with a hammer. Remove the snap ring.

HINT:
Wrap the tape approx. 8 mm (0.31 in.) from the valve stem end.

NOTICE:
Be careful not to damage the valve lifter hole.

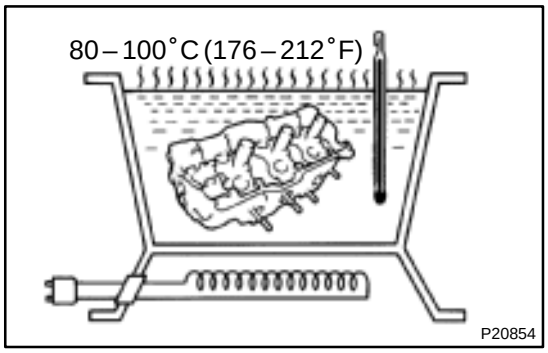

(b) Gradually heat the cylinder head to 80 – 100˚C (176 – 212˚F).

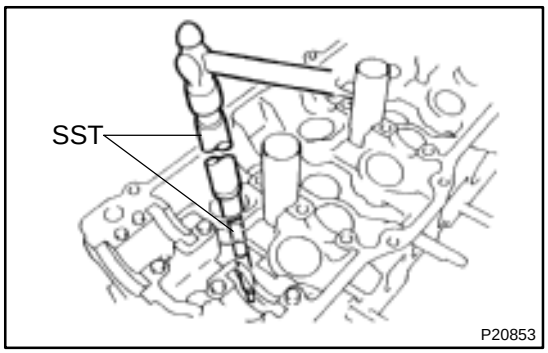

(c) Using SST and a hammer, tap out the guide bushing.
SST 09201–10000 (09201–01060),
09950–70010 (09951–07150)

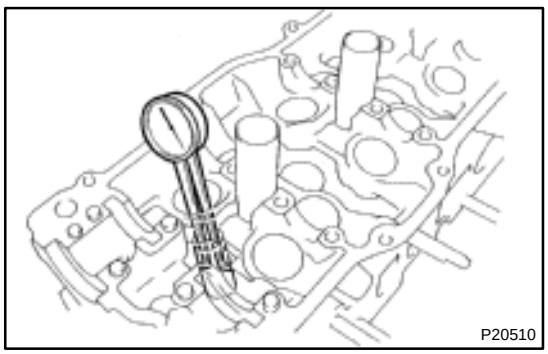

(d) Using a caliper gauge, measure the bushing bore diameter of the cylinder head.

(e) Select a new guide bushing (STD or O/S 0.05).
Both intake and exhaust

Bushing bore diameter mm (in.)	Bushing size
10.985 – 11.027 (0.4350 – 0.4341)	Use STD
11.050 – 11.077 (0.4350 – 0.4361)	Use O/S 0.05

If the bushing bore diameter of the cylinder head is greater than 11.027 mm (0.4341 in.), machine the bushing bore to these dimension:

11.050 – 11.077 mm (0.4350 – 0.4361 in.)

If the bushing bore diameter of the cylinder head is greater than 11.077 mm (0.4361 in.), replace the cylinder head.

(f) Gradually heat the cylinder head to 80 – 100˚C (176 – 212˚F).

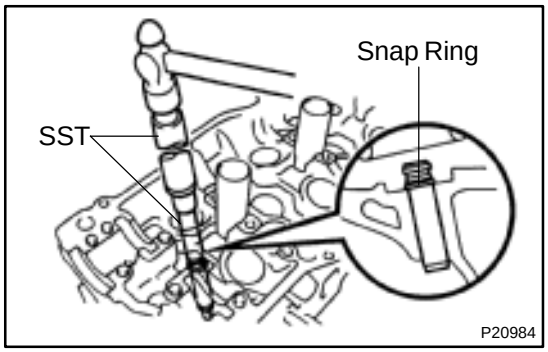

(g) Using SST and a hammer, tap in a new guide bushing until the snap ring makes contact with the cylinder head.
SST 09201–10000 (09201–01060), 09950–70010 (09951–07150)

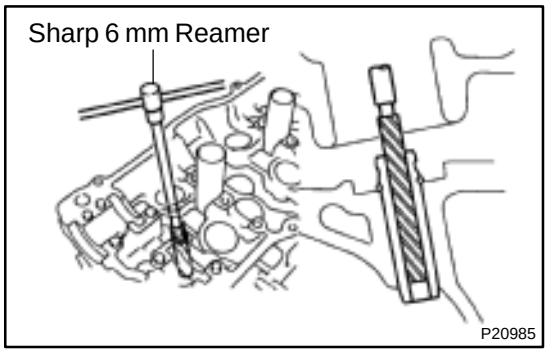

(h) Using a sharp 6 mm reamer, ream the guide bushing to obtain the standard specified clearance (See page EM–39) between the guide bushing and valve stem.

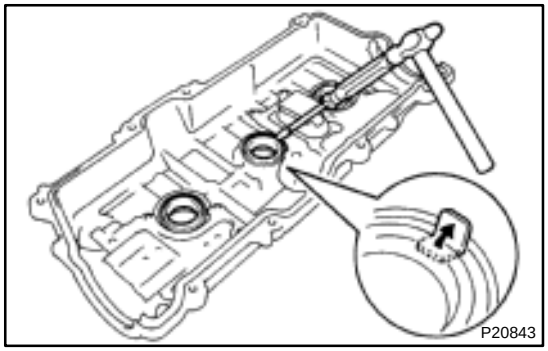

2. REPLACE SPARK PLUG TUBE GASKETS

(a) Bend up the tab on the ventilation baffle plate which prevents the gasket from the slipping out.

(b) Using a screwdriver and hammer, tap out the gasket.

NOTICE:

Do not scratch or damage the joint of the cylinder head cover.

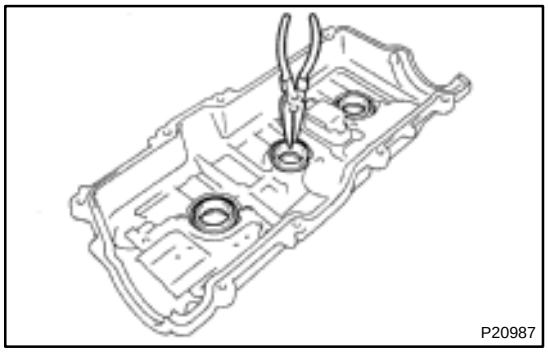

(c) Using needle–nose pliers, pry out the gasket.

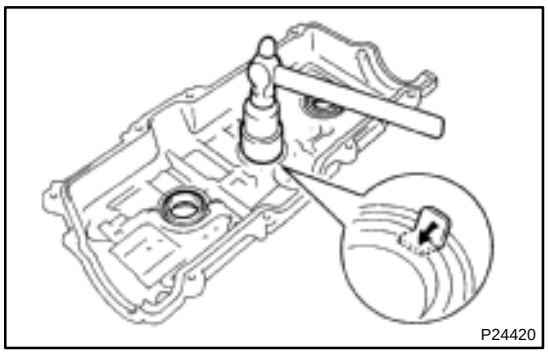

(d) Using a 32 mm socket wrench and hammer, tap in a new gasket until its surface is flush with the upper edge of the cylinder head cover.
(e) Apply a light coat of MP grease to the gasket lip.
(f) Return the ventilation plate tab to its original position.

AIR–FUEL RATIO (A/F) SENSOR (California Spec.)

COMPONENTS

SF176–01

(Bank 1 Sensor 1)

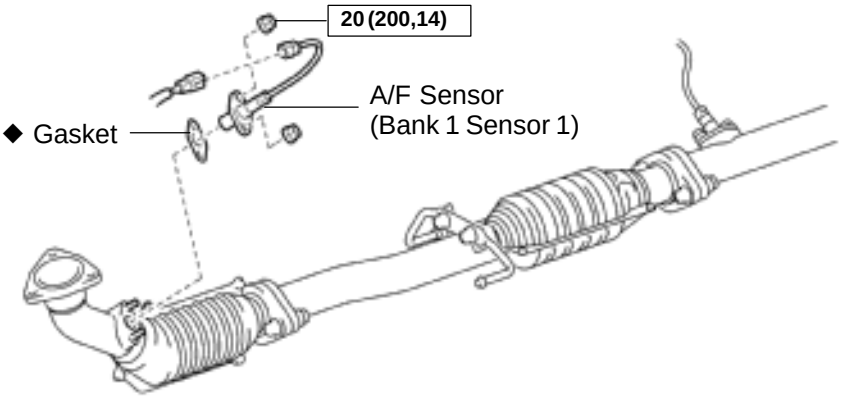

N·m (kgf·cm, ft·lbf) : Specified torque

◆ Non–reusable part

B09852

SF177–01

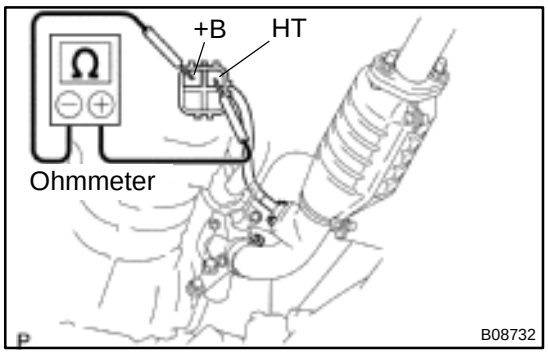

INSPECTION

1. INSPECT HEATER RESISTANCE OF A/F SENSOR

(a) Disconnect the sensor connector.

(b) Using an ohmmeter, measure the resistance between terminals +B and HT.

Resistance:

at 20°C (68°F)	0.8 – 1.4 Ω
at 800°C (1,472°F)	1.8 – 3.2 Ω

If the resistance is not as specified, replace the sensor.

Torque: 20 N·m (200 kgf·cm, 14 ft·lbf)

(c) Connect the sensor connector.

2. INSPECT OPERATION OF A/F SENSOR

(See page DI–301)

CIRCUIT OPENING RELAY

COMPONENTS

SF055–04

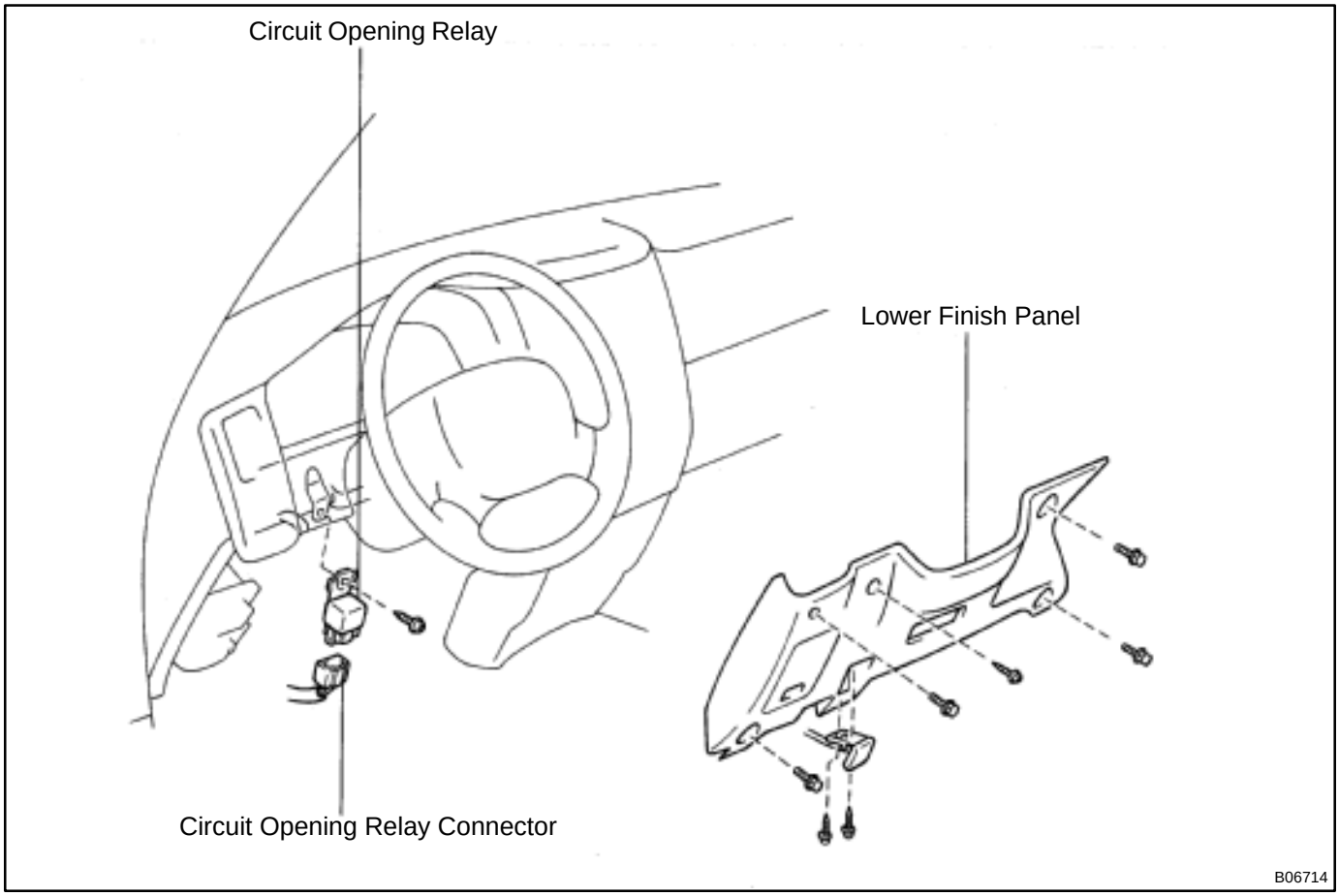

SF10H–02

INSPECTION

1. REMOVE CIRCUIT OPENING RELAY

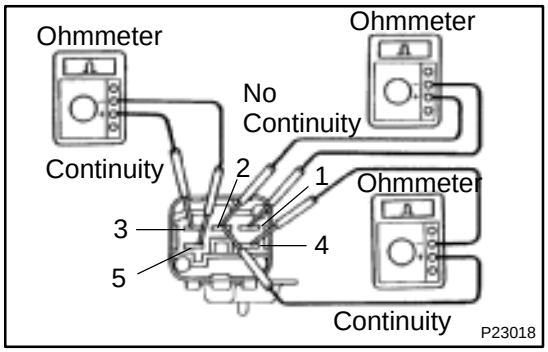

2. INSPECT CIRCUIT OPENING RELAY

(a) Inspect the relay continuity.

(1) Using an ohmmeter, check that there is no continuity between terminals 1 and 2.

If there is continuity, replace the relay.

(2) Check that there is continuity between terminals 2 and 4.

If there is no continuity, replace the relay.

(3) Check that there is continuity between terminals 5 and 5.

If there is no continuity, replace the relay.

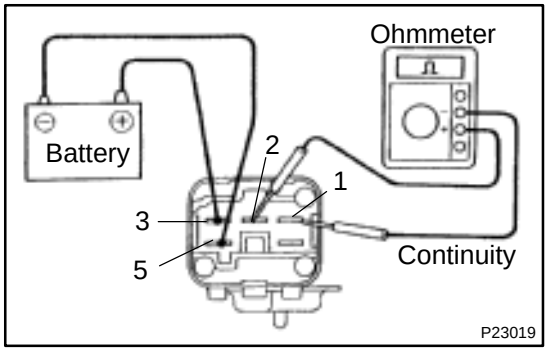

(b) Inspect the relay operation.

(1) Apply battrery positive voltage across terminals 3 and 5.

(2) Using an ohmmeter, check that there is continuity between terminals 1 and 2.

If there is no continuity, replace the relay.

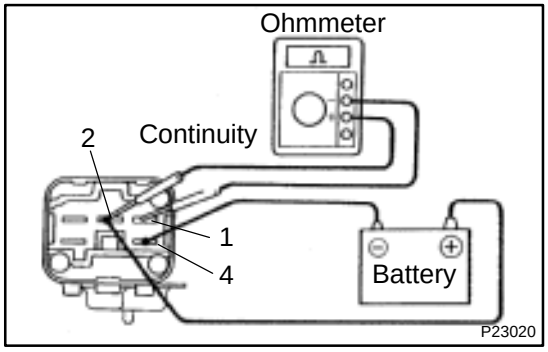

(3) Apply battery positive voltage across terminals 2 and 4.

(4) Using an ohmmeter, check that there is continuity between terminals 1 and 2.

If there is no continuity, replace the relay.

3. REINSTALL CIRCUIT OPENING RELAY

ENGINE CONTROL MODULE (ECM)

SF05G–04

COMPONENTS

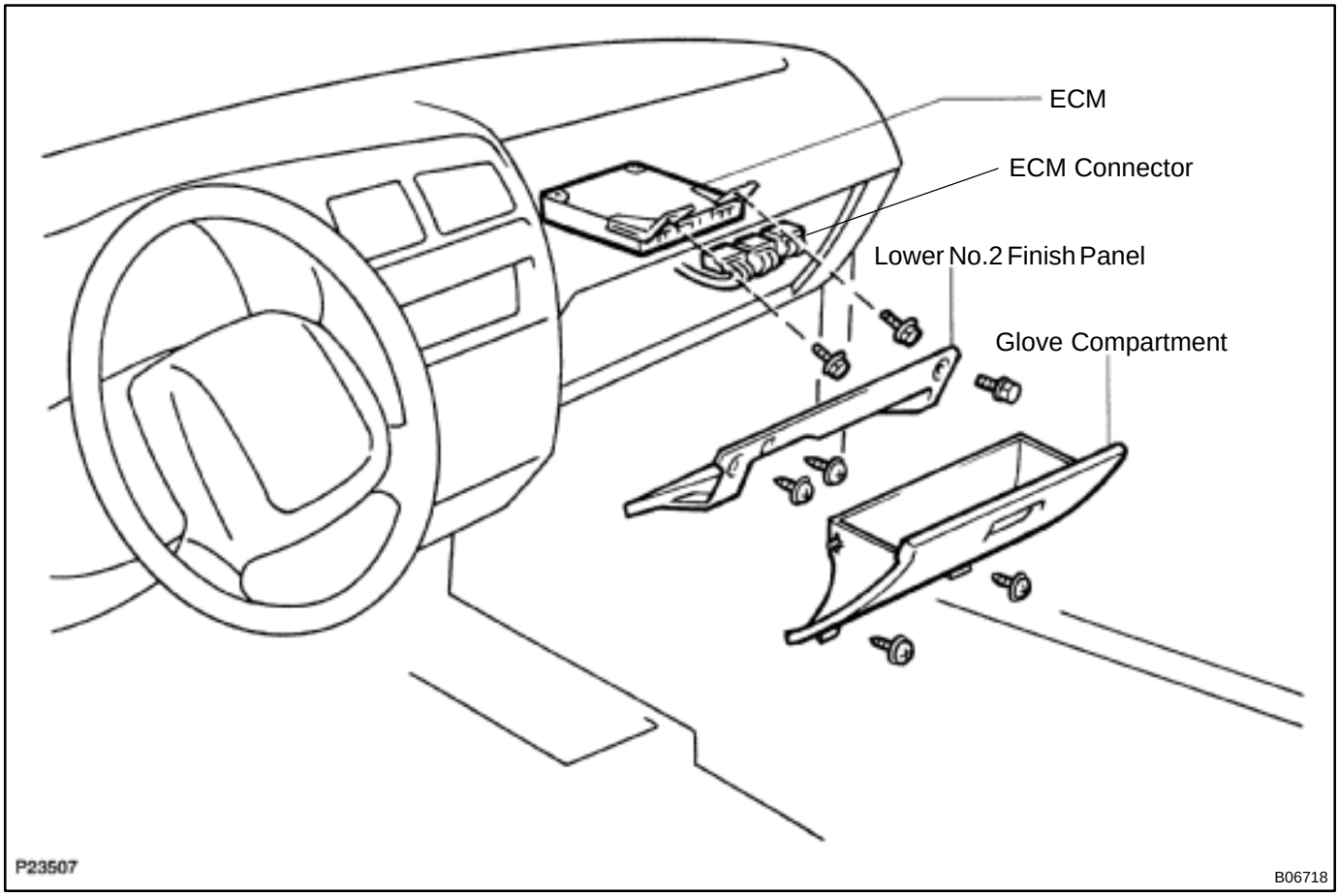

SF10L–02

INSPECTION

INSPECT ECM (See page DI–197)

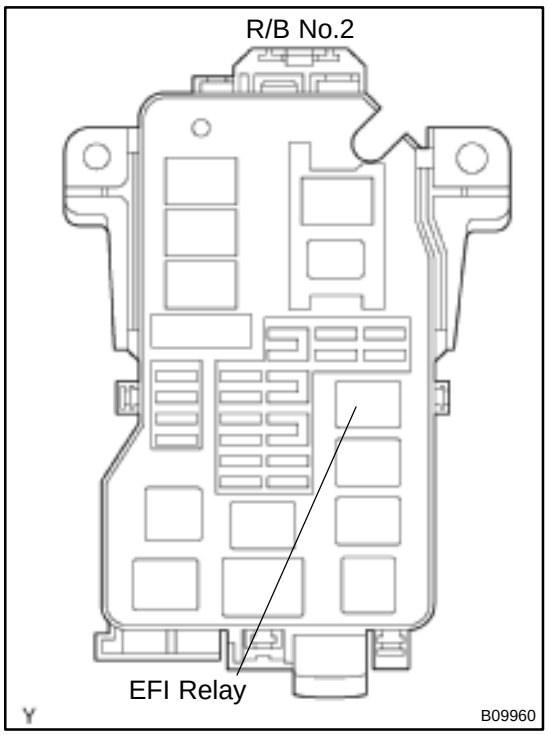

EFI MAIN RELAY

SF175–01

INSPECTION

1. REMOVE EFI MAIN RELAY (Marking: EFI)

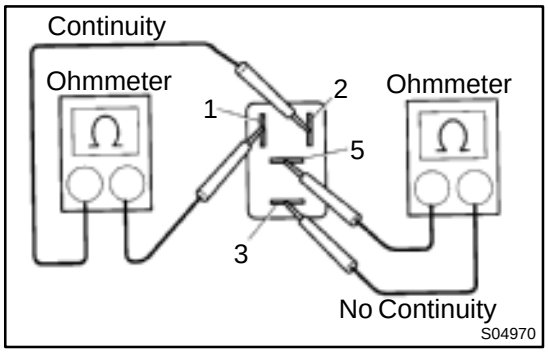

2. INSPECT EFI MAIN RELAY

(a) Inspect the relay continuity.

(1) Using an ohmmeter, check that there is continuity between terminals 1 and 2.

If there is no continuity, replace the relay.

(2) Check that there is no continuity between terminals 3 and 5.

If there is continuity, replace the relay.

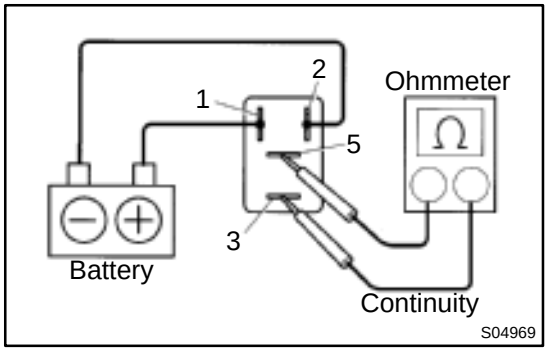

(b) Inspect the relay operation.

(1) Apply battery positive voltage across terminals 1 and 2.

(2) Using an ohmmeter, check that there is continuity between terminals 3 and 5.

If there is no continuity, replace the relay.

3. REINSTALL EFI MAIN RELAY

ENGINE COOLANT TEMPERATURE (ECT) SENSOR

COMPONENTS

SF059–04

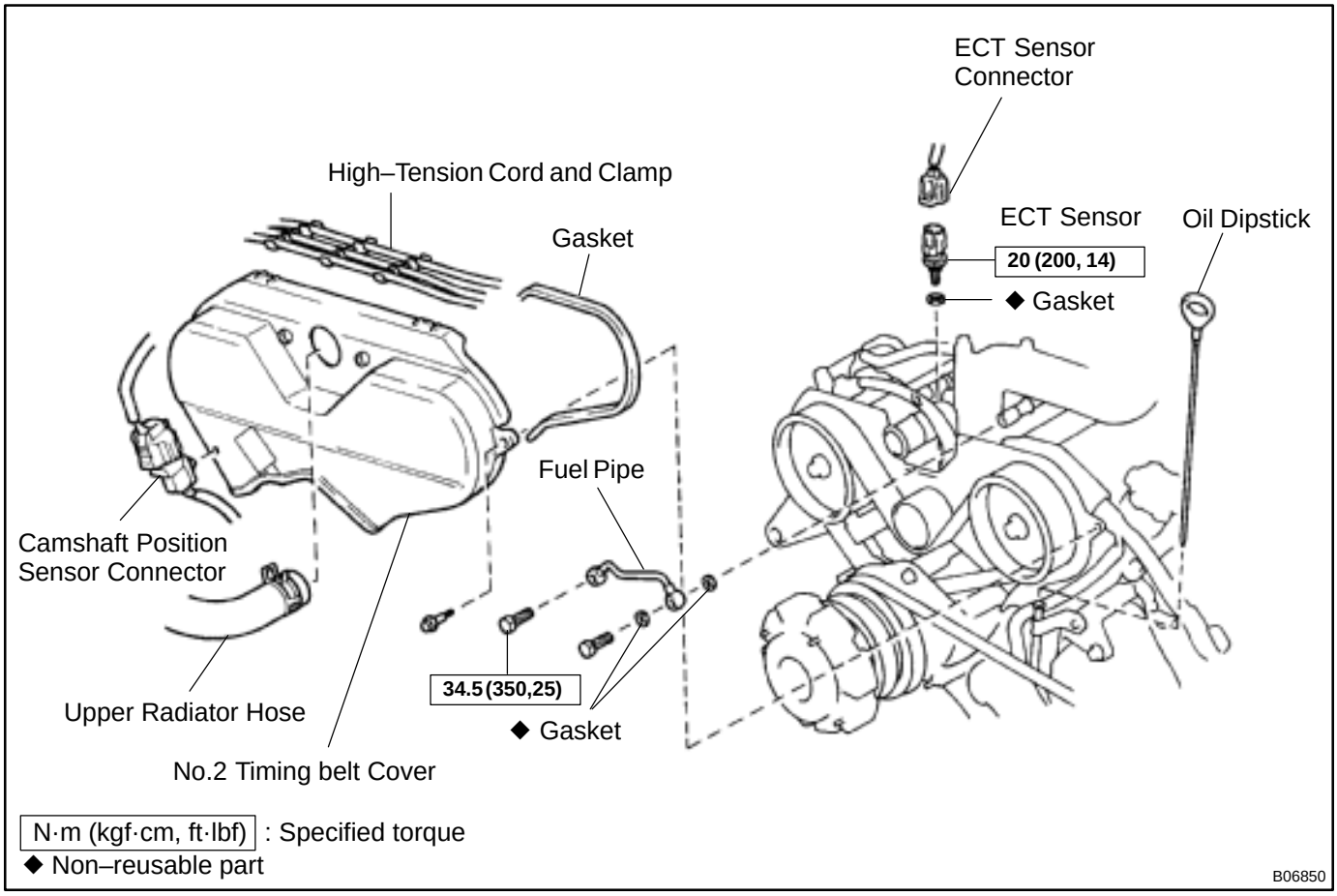

SF10K–02

INSPECTION

1. **DRAIN ENGINE COOLANT**
2. **DISCONNECT UPPER RADIATOR HOSE FROM WATER OUTLET**
3. **REMOVE NO.2 TIMING BELT COVER**
   (See page EM–13)

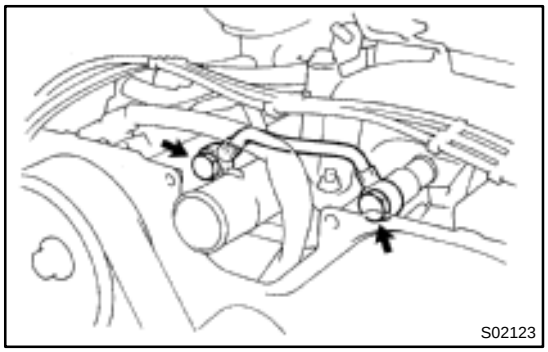

4. **REMOVE FUEL PIPE**

Remove the 2 union bolt, 4 gaskets and fuel pipe.

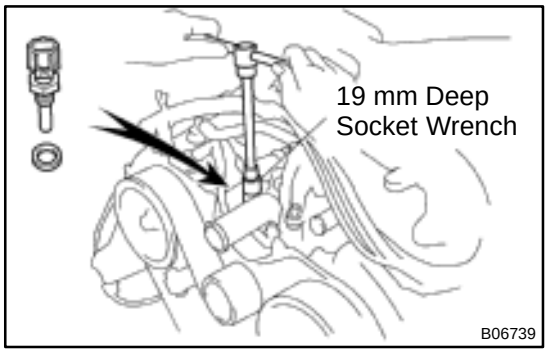

5. **REMOVE ECT SENSOR**

(a) Disconnect the ECT sensor connector.

(b) Using a 19 mm deep socket wrench, remove the ECT sensor and gasket.

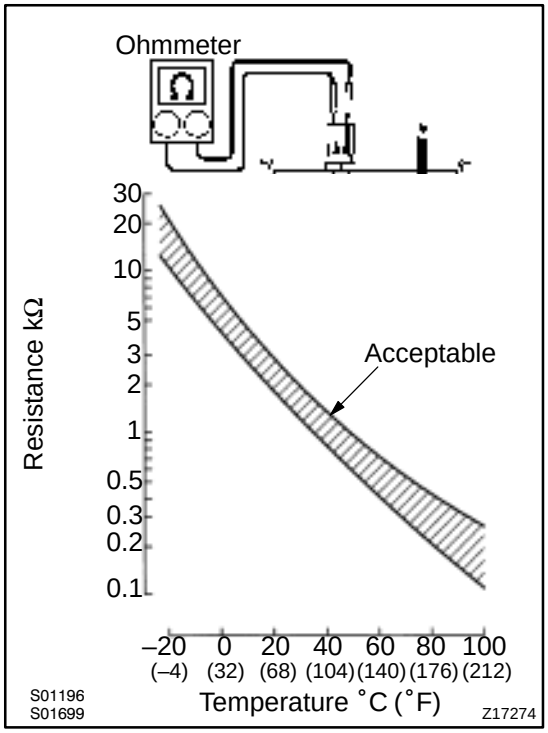

6. **INSPECT ECT SENSOR**

Using an ohmmeter, measure the resistance between the terminals.

Resistance: Refer to the graph

If the resistance is not as specified, replace the ECT sensor.

7. **REINSTALL ECT SENSOR**

(a) Install a new gasket to the ECT sensor.

(b) Using a 19 mm deep socket, install the ECT sensor.

Torque: 20 N·m (200 kgf·cm, 14 ft·lbf)

(c) Connect the ECT sensor connector.

8. **REINSTALL FUEL PIPE**

Install the fuel pipe with 4 new gaskets and the 2 union bolts.

Torque: 34.3 N·m (350 kgf·cm, 25 ft·lbf)

9. **REINSTALL NO.2 TIMING BELT COVER**
   (See page EM–19)
10. **RECONNECT UPPER RADIATOR HOSE TO WATER OUTLET**
11. **REFILL WITH ENGINE COOLANT**

FUEL CUT RPM

SF10M–03

INSPECTION

1. WARM UP ENGINE

Allow the engine to warm up to normal operating temperature.

2. CONNECT TOYOTA HAND–HELD TESTER OR OBDII SCAN TOOL (See page SF–1)

3. INSPECT FUEL CUT OFF RPM

(a) Increase the engine speed to at least 3,500 rpm.

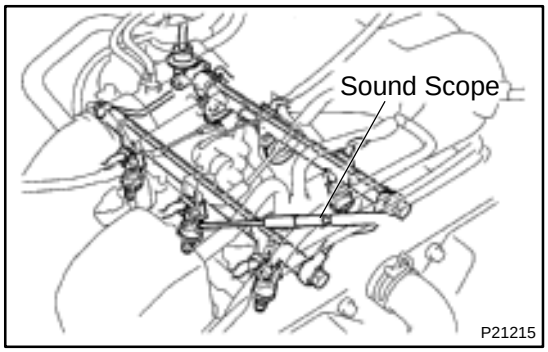

(b) Use a sound scope to check for injector operating noise.

(c) Check that when the throttle lever is released, injector operation noise stops momentarily and then resumes.

HINT:

Measure with the A/C OFF.

Fuel return rpm:

M/T	1,000 rpm
A/T	1,200rpm

4. DISCONNECT TOYOTA HAND–HELD TESTER OR OBDII SCAN TOOL

FUEL PRESSURE REGULATOR

SF04H–04

COMPONENTS

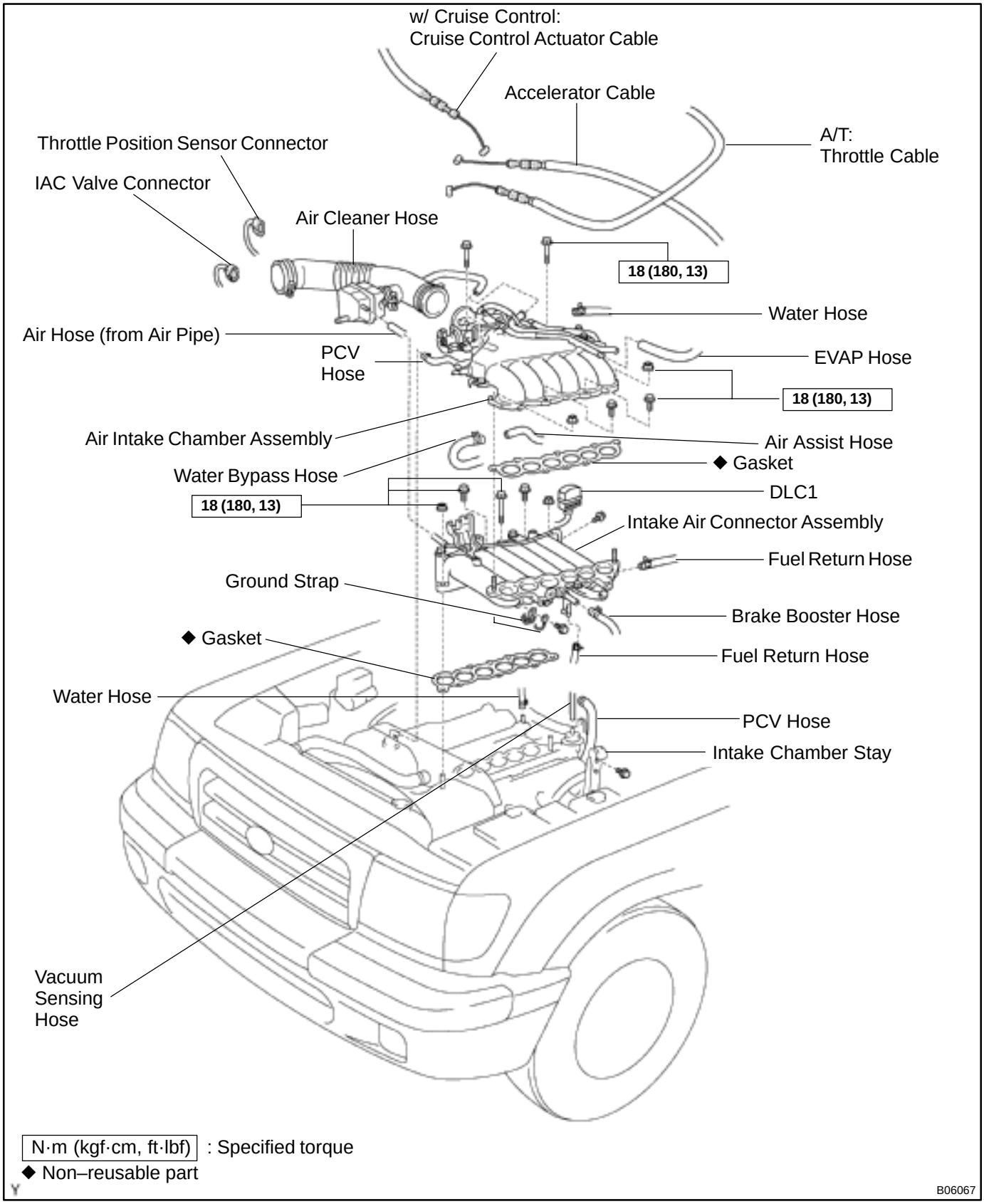

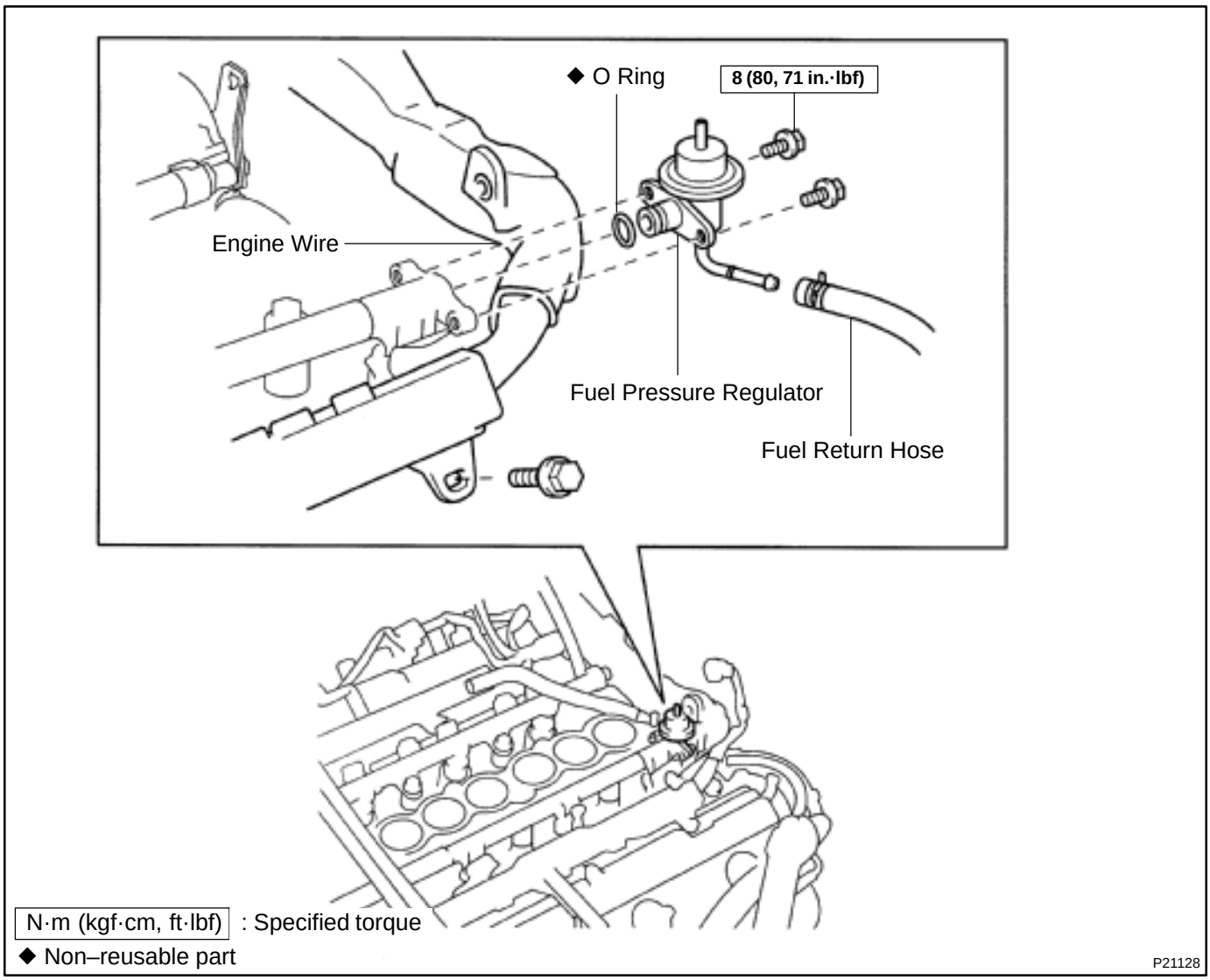
◆ O Ring
8 (80, 71 in.·lbf)
Engine Wire
Fuel Pressure Regulator
Fuel Return Hose
N·m (kgf·cm, ft·lbf) : Specified torque
◆ Non–reusable part
P21128

SF04J–04

INSTALLATION

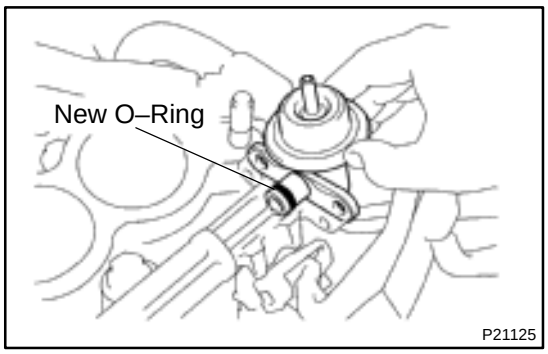

1. INSTALL FUEL PRESSURE REGULATOR

(a) Apply a light coat of gasoline to a new O–ring, and install it to the pressure regulator.

(b) Attach the pressure regulator to the LH delivery pipe.

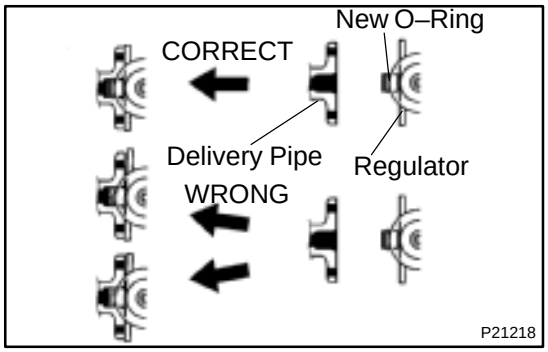

(c) Check that the pressure regulator rotates smoothly.

NOTICE:

If it does not rotate smoothly, the O–ring may be pinched, so remove the pressure regulator and repeat steps (a) to (c) above.

(d) Install the pressure regulator with the 2 bolts.

Torque: 8 N·m (80 kgf·cm, 71 in.·lbf)

(e) Install the engine wire with the bolt.

2. CONNECT FUEL RETURN HOSE TO FUEL PRESSURE REGULATOR

NOTICE:

Be sure to insert the hose up to the stopper and clip it.

3. INSTALL INTAKE AIR CONNECTOR ASSEMBLY (See page EM–53)

4. INSTALL AIR CLEANER HOSE

5. CHECK FOR FUEL LEAKS (See page SF–1)

SF04I–04

REMOVAL

1. **REMOVE AIR CLEANER HOSE**
2. **REMOVE INTAKE AIR CONNECTOR ASSEMBLY (See page EM–30)**
3. **DISCONNECT FUEL RETURN HOSE FROM FUEL PRESSURE REGULATOR**

CAUTION:
Put a shop rag under the pressure regulator.

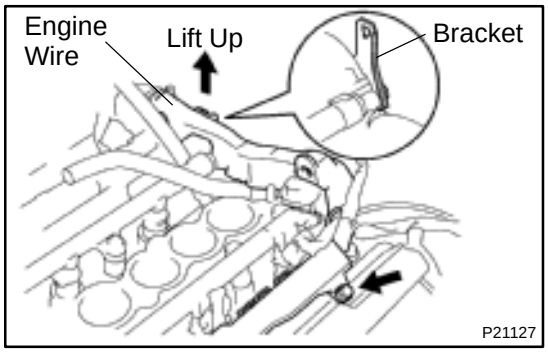

4. **REMOVE FUEL PRESSURE REGULATOR**

(a) Remove holding bolt the engine wire to the LH cylinder head cover.

(b) Disconnect the protector from the bracket on the RH cylinder head cover, and lift up the engine wire.

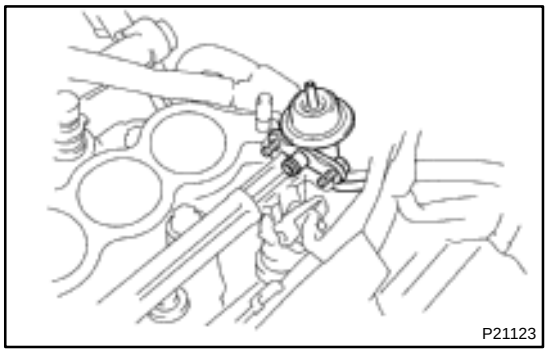

(c) Remove the 2 bolts, and pull out the pressure regulator.

(d) Remove the O–ring from the pressure regulator.

SF04B–04

COMPONENTS

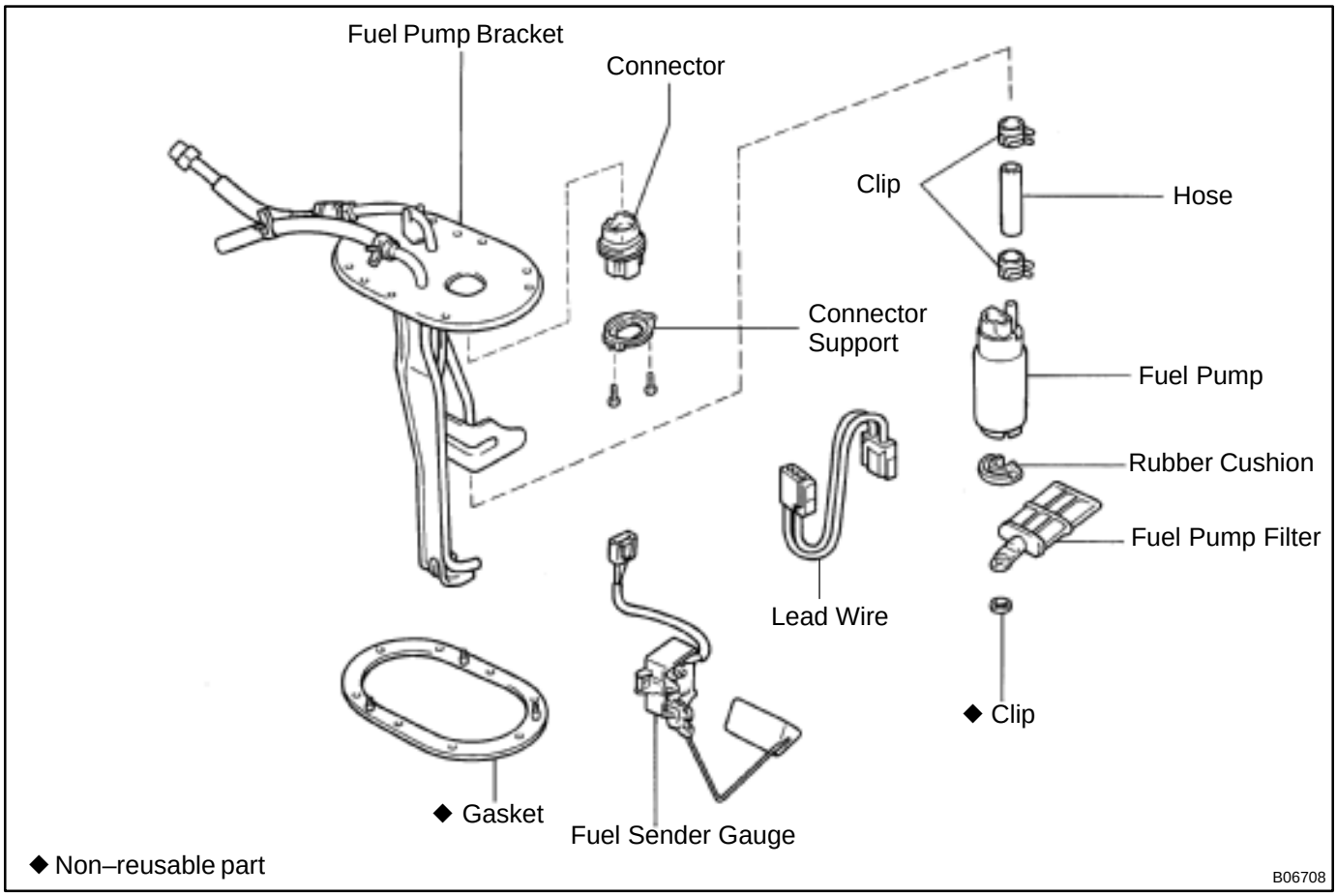

SF04D–04

DISASSEMBLY

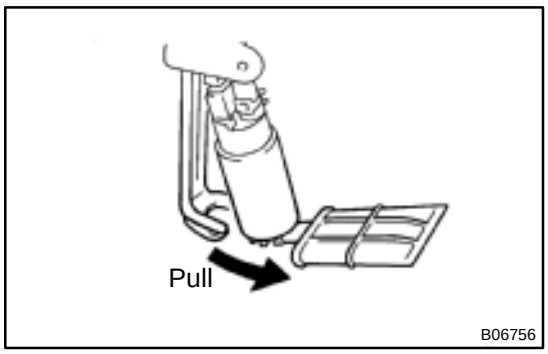

1. REMOVE FUEL PUMP FROM FUEL PUMP BRACKET

(a) Disconnect the fuel pump connector.
(b) Pull off the lower side of the fuel pump from the pump bracket.
(c) Disconnect the fuel hose from the fuel pump, and remove the fuel pump.
(d) Remove the rubber cushion from the fuel pump.

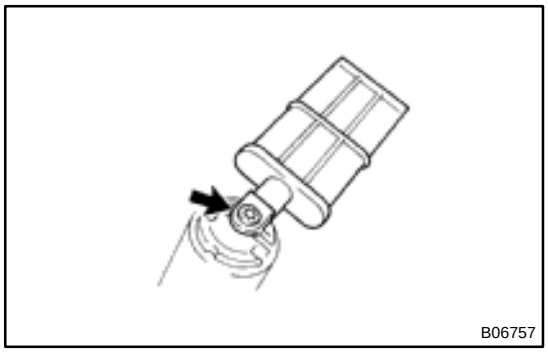

2. REMOVE FUEL PUMP FILTER FROM FUEL PUMP

(a) Remove the clip.

HINT:

At the time of installation, please refer to the following items.
Install the pump filter with a new clip.

(b) Pull out the pump filter.

SF109–01

INSTALLATION

Installation is in the reverse order of removal. (See page SF–9)

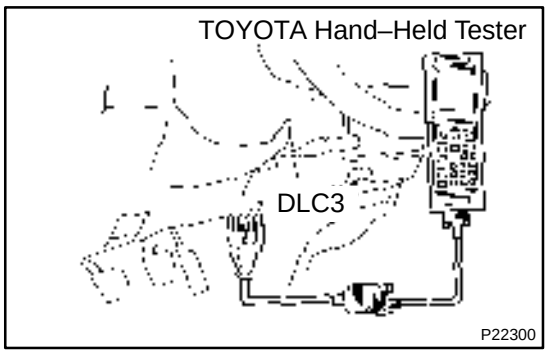

FUEL PUMP

SF107–02

ON–VEHICLE INSPECTION

1. CHECK FUEL PUMP OPERATION

(a) Connect a TOYOTA hand–held tester to the DLC3.

(b) Turn the ignition switch ON and push TOYOTA hand–held tester main switch ON.

NOTICE:

Do not start the engine.

(c) Select the ACTIVE TEST mode on the TOYOTA hand–held tester.

(d) Please refer to the TOYOTA hand–held tester operator's manual for further details.

(e) If you have no TOYOTA hand–held tester, connect the positive (+) and negative (–) leads from the battery to the fuel pump connector. (See step 4)

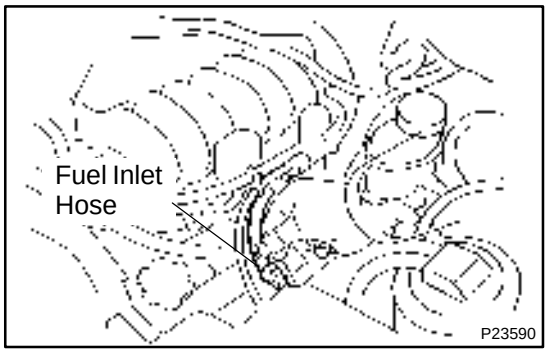

(f) Check that there is pressure in the fuel inlet hose from the fuel filter.

HINT:

If there is fuel pressure, you will hear the sound of fuel flowing. If there is no pressure, check the M–fuse, fuses, EFI main relay, fuel pump, ECM and wiring connections.

(g) Turn the ignition switch OFF.

(h) Disconnect the TOYOTA hand–held tester from the DLC3.

2. CHECK FUEL PRESSURE

(a) Check the battery positive voltage is above 12 V.

(b) Disconnect the negative (–) terminal cable from the battery.

(c) Remove the 6 bolts, and disconnect the No.2 timing belt cover.

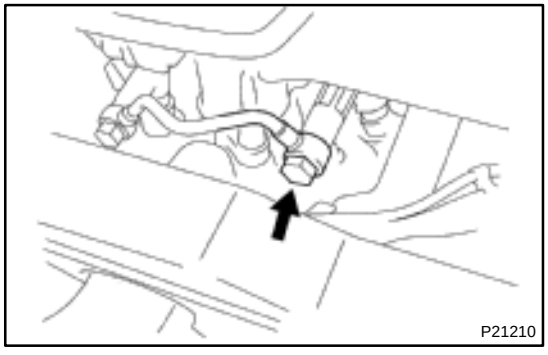

(d) Remove the union bolt holding the fuel pipe to the delivery pipe and gasket.

CAUTION:

- **Put a shop towel under the delivery pipe.**
- **Slowly loosen the union bolt.**

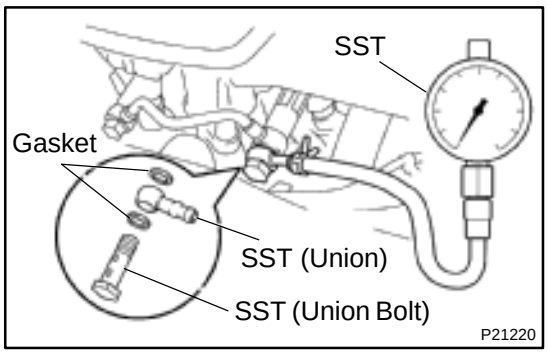

(e) Install SST (pressure gauge) to the delivery pipe with the 2 gaskets and SST (union and union bolt).
SST 09268–45012
Torque: 34.3 N·m (350 kgf·cm, 25 ft·lbf)
(f) Wipe off any splattered gasoline.
(g) Connect a TOYOTA hand–held tester to the DLC3. (See step 1)
(h) Reconnect the negative (–) terminal cable to the battery.
(i) Turn the ignition switch ON.
(j) Measure the fuel pressure.
Fuel pressure:
265 – 304 kPa (2.7 – 3.1 kgf/cm^2, 38 – 44 psi)

If pressure is high, replace the fuel pressure regulator.
If pressure is low, check the fuel hoses, fuel hose connections, fuel pump, fuel filter and fuel pressure regulator.

(k) Disconnect the TOYOTA hand–held tester from the DLC3.
(l) Reinstall the No.2 timing belt cover with the 6 bolts.
Torque: 9 N·m (90 kgf·cm, 80 in.·lbf)
(m) Start the engine.

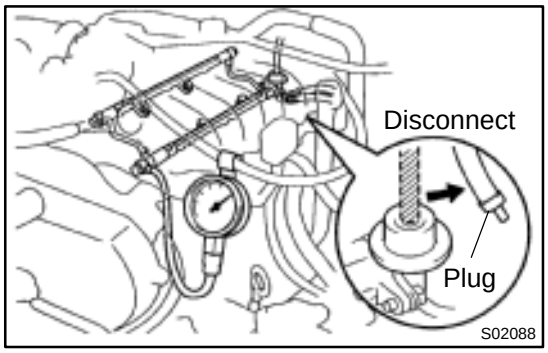

(n) Disconnect the vacuum sensing hose from the fuel pressure regulator, and plug the hose end.
(o) Measure the fuel pressure at idle.
Fuel pressure:
265 – 304 kPa (2.7 – 3.1 kgf/cm^2, 38 – 44 psi)
(p) Reconnect the vacuum sensing hose to the fuel pressure regulator.
(q) Measure the fuel pressure at idle.
Fuel pressure:
226 – 265 kPa (2.3 – 2.7 kgf/cm^2, 33 – 38 psi)

If pressure is not as specified, check the vacuum sensing hose and fuel pressure regulator.

(r) Stop the engine.
(s) Check that the fuel pressure remains as specified for 5 minutes after the engine has stopped.
Fuel pressure: 147 kPa (1.5 kgf/cm^2, 21 psi) or more

If pressure is not as specified, check the fuel pump, pressure regulator and/or injectors.

(t) After checking fuel pressure, disconnect the negative (–) terminal cable from the battery and carefully remove the SST to prevent gasoline from splashing.
SST 09268–45012
(u) Remove the other union bolt, 3 gaskets and fuel pipe from the delivery pipes.
(v) Reinstall the fuel pipe with 4 new gaskets and the 2 union bolts.
Torque: 34.3 N·m (350 kgf·cm, 25 ft·lbf)
(w) Reconnect the negative (–) terminal cable to the battery.
(x) Check for fuel leaks. (See page SF–1)

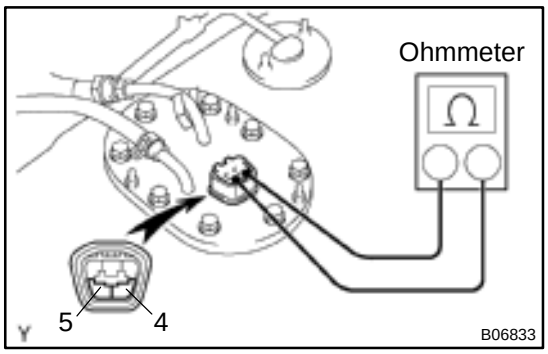

3. INSPECT FUEL PUMP RESISTANCE

Using an ohmmeter, measure the resistance between terminals 4 and 5.

Resistance: 0.2 – 3.0 Ω at 20˚C (68˚F)

If the resistance is not specified, replace the fuel pump and/or lead wire.

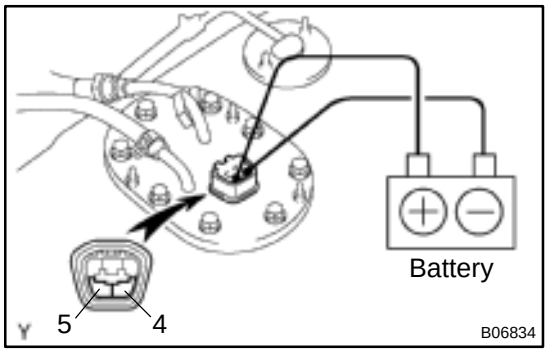

4. INSPECT FUEL PUMP RESISTANCE

Connect the positive (+) lead from the battery to terminal 4 of the connector, and the negative (–) lead to terminal 5. Check that the fuel pump operates.

NOTICE:

- **These tests must be done quickly (within 10 seconds) to prevent the coil from burning out.**
- **Keep the fuel pump as far away from the battery as possible.**
- **Always do switching at the battery side.**

If operation is not as specified, replace the fuel pump and/or lead wire.

SF108–01

REASSEMBLY

Reassembly is in the reverse order of disassembly. (See page SF–10)

SF04C–05

REMOVAL

CAUTION:
Do not smoke or work near an open flame when working on the fuel pump.

1. REMOVE FUEL TANK (See page SF–24)

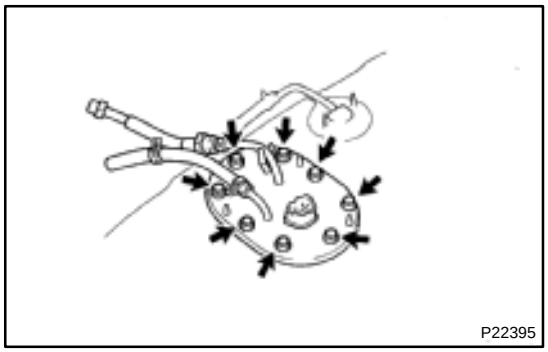

2. REMOVE FUEL PUMP BRACKET ASSEMBLY FROM FUEL TANK

(a) Disconnect the fuel pump connector from the clamp.
(b) Remove the 8 bolts.
Torque: 3.4 N·m (35 kgf·cm, 30 in.·lbf)

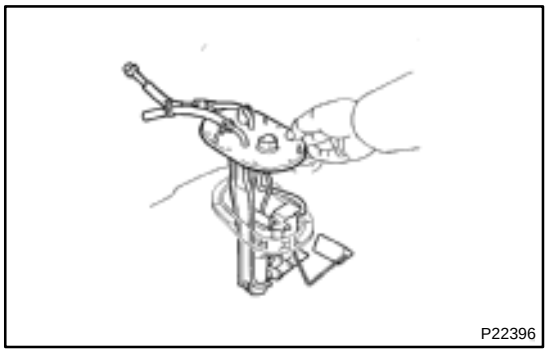

(c) Pull out the pump bracket assembly.
(d) Remove the gasket from the pump bracket.

HINT:
At the time of installation, please refer to the following items. Install a new gasket to the pump bracket.

SFI SYSTEM

SF049–04

PRECAUTION

1. BEFORE WORKING ON FUEL SYSTEM, DISCONNECT NEGATIVE (–) TERMINAL CABLE FROM BATTERY

HINT:

Any diagnostic trouble code retained by the computer will be erased when the negative (–) terminal cable is removed from the battery.

Therefore, if necessary, read the diagnosis before removing the negative (–) terminal cable from the battery.

2. DO NOT SMOKE OR WORK NEAR AN OPEN FLAME WHEN WORKING ON FUEL SYSTEM

3. KEEP GASOLINE AWAY FROM RUBBER OR LEATHER PARTS

4. MAINTENANCE PRECAUTIONS

(a) In the event of engine misfire, these precautions should be taken.
  (1) Check proper connection to battery terminals, etc.
  (2) After repair work, check that the ignition coil terminals and all other ignition system lines are reconnected securely.
  (3) When cleaning the engine compartment, be especially careful to protect the electrical system from water.

(b) Precautions when the handling oxygen sensors.
  (1) Do not allow oxygen sensor to drop or hit against an object.
  (2) Do not allow the sensor to come into contact with water.

5. IF VEHICLE IS EQUIPPED WITH MOBILE RADIO SYSTEM (HAM, CB, ETC.)

If the vehicle is equipped with a mobile communication system, refer to the precaution in the IN section.

6. AIR INDUCTION SYSTEM

(a) Separation of the engine oil dipstick, oil filler cap, PCV hose, etc. may cause the engine to run out of tune.

(b) Disconnection, looseness or cracks in the parts of the air induction system between the throttle body and cylinder head will allow air suction and cause the engine to run out of tune.

7. ELECTRONIC CONTROL SYSTEM

(a) Before removing SFI wiring connectors, terminals, etc., first disconnect the power by either turning the ignition switch OFF or disconnecting the negative (–) terminal cable from the battery.

HINT:

Always check the diagnostic trouble code before disconnecting the negative (–) terminal cable from the battery.

(b) When installing the battery, be especially careful not to incorrectly connect the positive (+) and negative (–) cables.
(c) Do not permit parts to receive a severe impact during removal or installation. Handle all SFI parts carefully, especially the ECM.
(d) Be careful during troubleshooting as there are numerous transistor circuit, and even slight terminal contact can cause further troubles.
(e) Do not open the ECM cover.
(f) When inspecting during rainy weather, take care to prevent entry of water. Also, when washing the engine compartment, prevent water from getting on the SFI parts and wiring connectors.
(g) Parts should be replaced as an assembly.
(h) Care should be taken when pulling out and inserting wiring connectors.
  (1) Release the lock and pull out the connector, pulling on the connectors.
  (2) Fully insert the connector and check that it is locked.

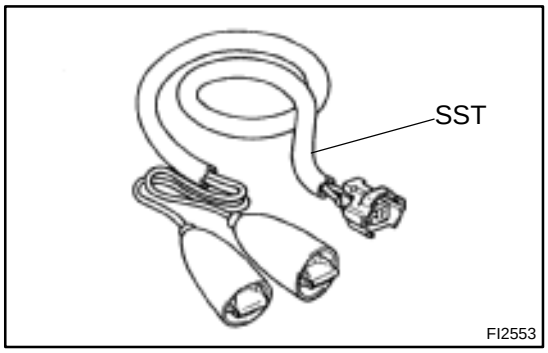

(i) Use SST for inspection or test of the injector or its wiring connector.
SST 09842–30070

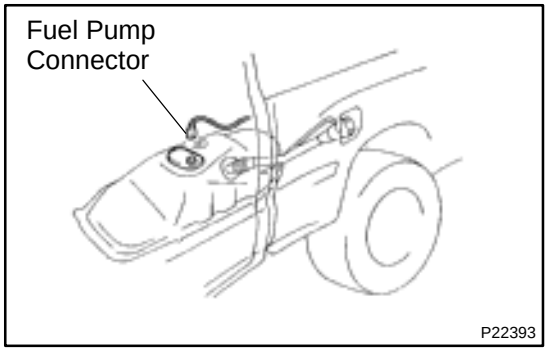

8. FUEL SYSTEM

(a) When disconnecting the high fuel pressure line, a large amount of gasoline will spill out, so observe these procedures:
  (1) Disconnect the fuel pump connector.
  (2) Start the engine. After the engine has stopped on its own, turn the ignition switch OFF.

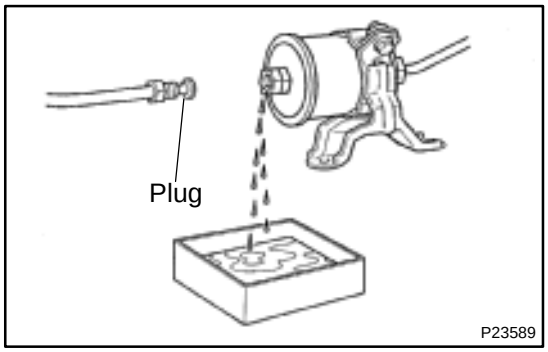

  (3) Put a container under the connection.
  (4) Slowly loosen the connection.
  (5) Disconnect the connection.
  (6) Plug the connection with a rubber plug.

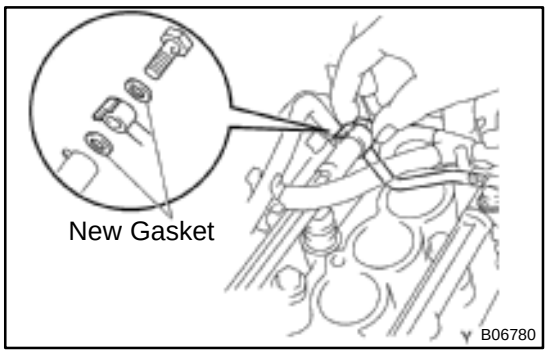

(b) When connecting the union bolt on the high pressure pipe union, observe these procedures:
(1) Always use 2 new gaskets.
(2) Tighten the union bolt by hand.
(3) Tighten the union bolt to the specified torque.
Torque: 34.3 N·m (350 kgf·cm, 25 ft·lbf)

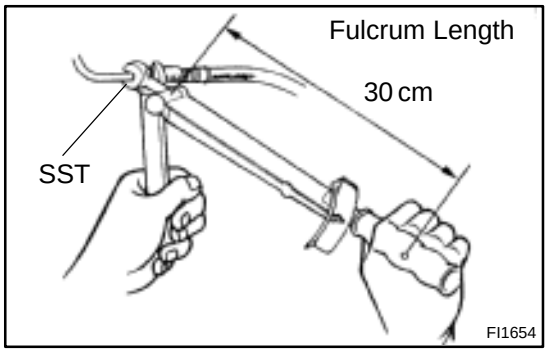

(c) When connecting the flare nut on the high pressure pipe union, observe these procedures:
(1) Apply a light coat of engine oil to the flare and tighten the flare nut by hand.
(2) Using SST, tighten the flare nut to the specified torque.
SST 09631–22020
Torque: 28 N·m (285 kgf·cm, 21 ft·lbf)

HINT:
Use a torque wrench with a fulcrum length of 30 cm (11.81 in.).

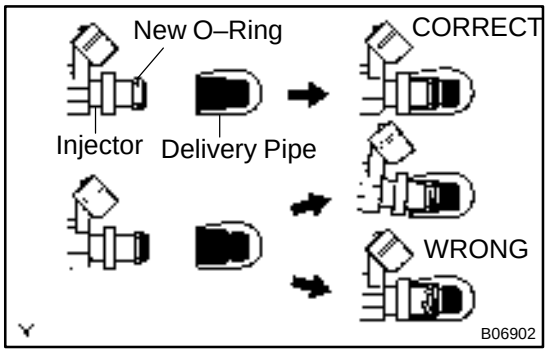

(d) Observe these precautions when removing and installing the injectors.
(1) Never reuse the O–ring.
(2) When placing a new O–ring on the injector, take care not to damage it in any way.
(3) Coat a new O–ring with spindle oil or gasoline before installing–never use engine, gear or brake oil.

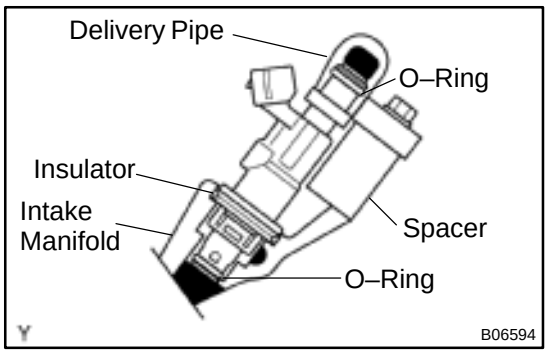

(e) Install the injector to the delivery pipe and intake manifold, as shown in the illustration.

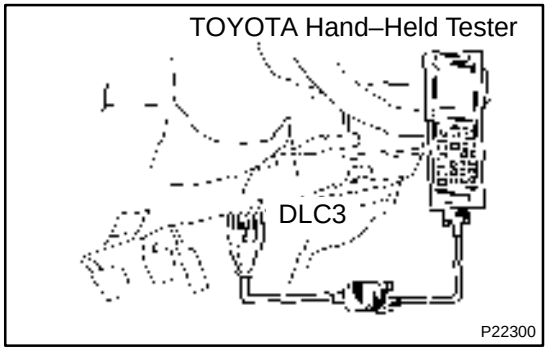

(f) Check that there are no fuel leaks after doing maintenance anywhere on the fuel system.
(1) Connect a TOYOTA hand–held tester to the DLC3.
(2) Turn the ignition switch ON and push TOYOTA hand–held tester main switch ON.

NOTICE:
Do not start the engine.

(3) Select the ACTIVE TEST mode on the TOYOTA hand–held tester.

(4) Please refer to the TOYOTA hand–held tester operator's manual for further details.

(5) If you have no TOYOTA hand–held tester, connect the positive (+) and negative (–) leads from the battery to the fuel pump connector.
(See page SF–5)

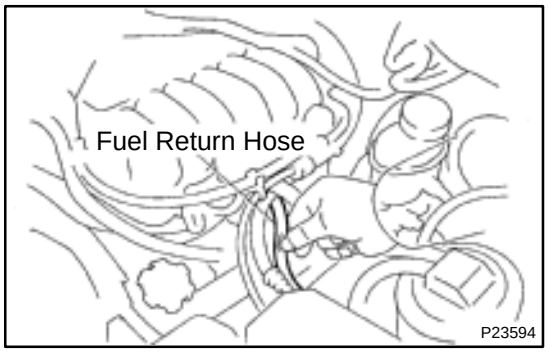

(6) Pinch the fuel return hose.
The pressure in the high pressure line will rise to approx. 400 kPa (4 kgf/cm^2, 57 psi). In this state, check to see that there are no leaks from any part of the fuel system.

NOTICE:
Always pinch the hose. Avoid bending as it may cause the hose to crack.

(7) Turn the ignition switch OFF.

(8) Disconnect the TOYOTA hand–held tester from the DLC3.

FUEL TANK AND LINE

SF04O–06

COMPONENTS

CAUTION:

- **Always use new gaskets when replacing the fuel tank or component parts.**
- **Apply the proper torque to all tightened parts.**

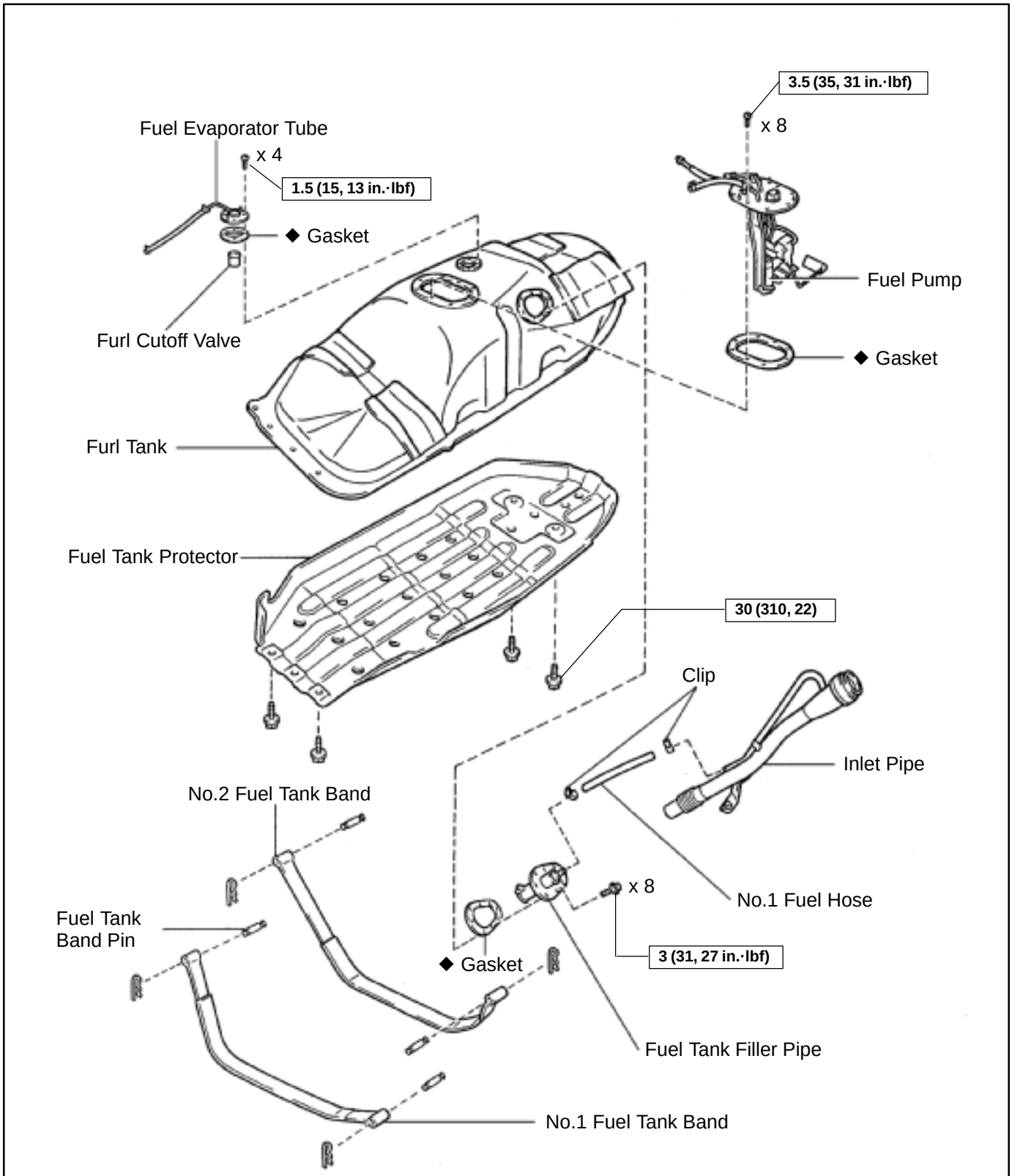

N·m (kgf·cm, ft·lbf) : Specified torque

◆ Non–reusable part

B06711

SF04Q–04

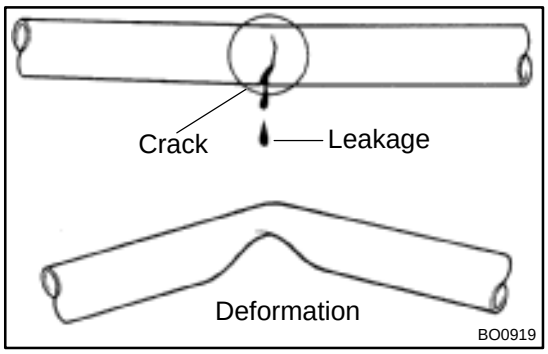

INSPECTION

INSPECT FUEL TANK AND LINE

(a) Check the fuel lines for cracks or leakage, and all connections for deformation.
(b) Check the fuel tank vapor vent system hoses and connections for looseness, sharp bends or damage.
(c) Check the fuel tank for deformation, cracks, fuel leakage or tank band looseness.
(d) Check the filler neck for damage or fuel leakage.
(e) Hose and pipe connections are as shown in the illustration.

If a problem is found, repair or replace the parts as necessary.

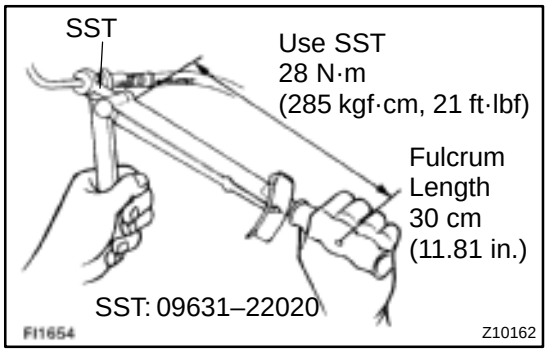

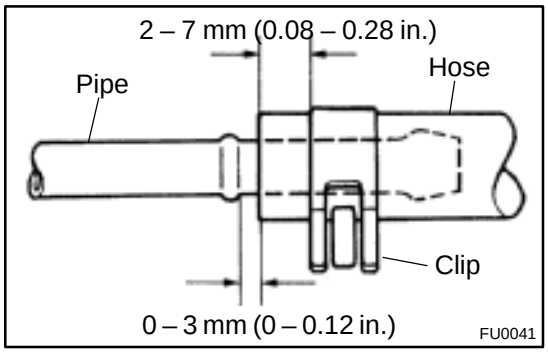

SF10F–02

COMPONENTS

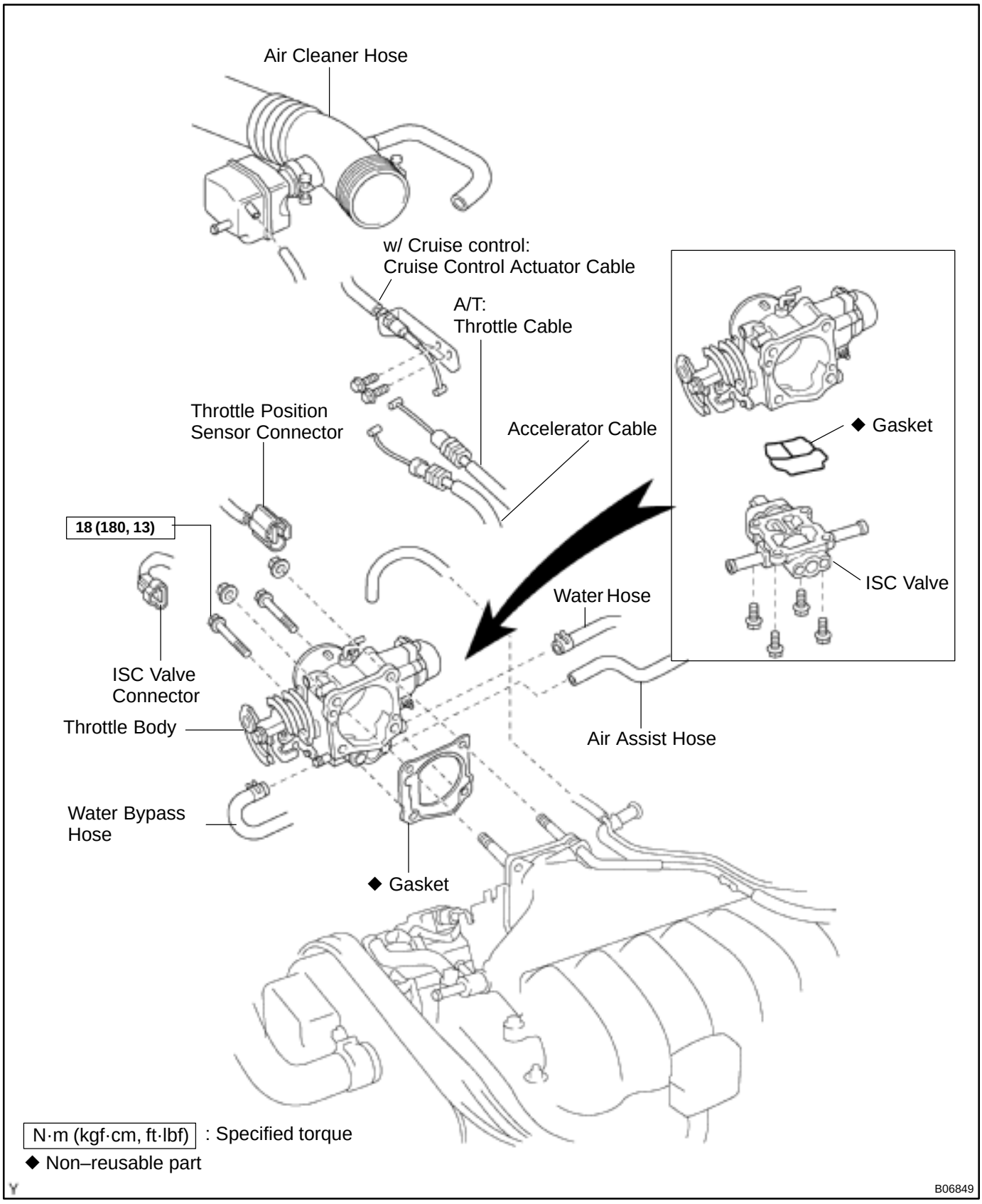

SF052–03

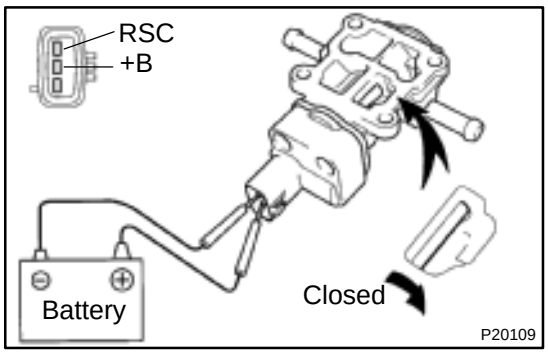

INSPECTION

INSPECT IAC VALVE OPERATION

(a) Connect the positive (+) lead from the battery to terminal +B and negative (–) lead to terminal RSC, and check that the valve is closed.

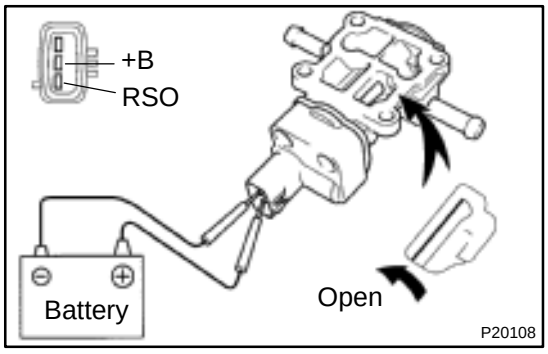

(b) Connect the positive (+) lead from the battery to terminal +B and negative (–) lead to terminal RSO, and check that the valve is open.

If operation is not as specified, replace the IAC valve.

SF10G–01

INSTALLATION

Installation is in the reverse order of removal. (See page SF–38)

IDLE AIR CONTROL (IAC) VALVE

SF04Z–04

ON–VEHICLE INSPECTION

1. INSPECT IAC VALVE OPERATION

(a) Initial conditions:
- Engine at normal operating temperature
- Idle speed checked correctly
- Transmission in neutral position
- A/C switch OFF

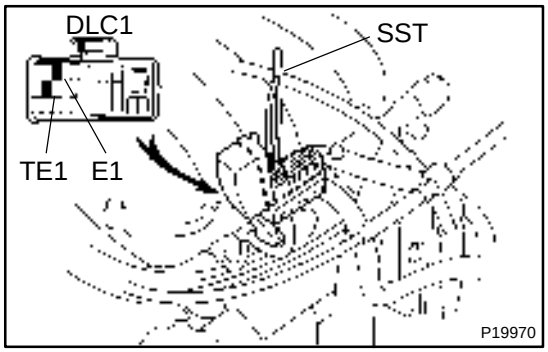

(b) Using SST, connect terminals TE1 and E1 of the DLC1.
SST 09843–18020

(c) After engine speed is kept at approx. 1,000 rpm for 5 seconds, check that it returns to the idle speed.

If the engine speed operation is not as specified, check the IAC valve, wiring and ECM.

(d) Remove the SST from the DLC1.
SST 09843–18020

2. INSPECT IAC VALVE RESISTANCE

NOTICE:

"Cold" and "Hot" in the following sentences express the temperature of the coils themselves. "Cold" is from –10˚C (14˚F) to 50˚C (122˚F) and "Hot" is from 50˚C (122˚F) to 100˚C (212˚F).

(a) Disconnect the IAC valve connector.

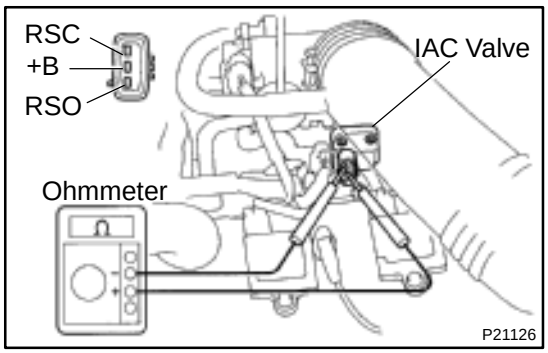

(b) Using an ohmmeter, measure the resistance between terminal +B and other terminals (RSC, RSO).
Resistance:

Cold	17.0 – 25.0 Ω
Hot	21.5 – 29.5 Ω

If the resistance is not as specified, replace the IAC valve.

(c) Reconnect the IAC valve connector.

3. INSPECT AIR ASSIST SYSTEM

(a) Initial conditions:
- Engine at normal operating temperature
- Idle speed checked correctly
- Transmission in neutral position
- A/C switch OFF

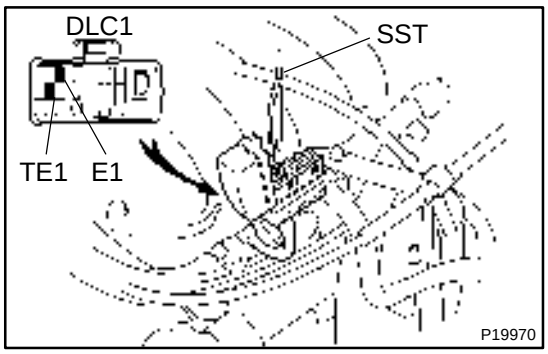

(b) Using SST, connect terminals TE1 and E1 of the DLC1.
SST 09843–18020

(c) After the engine speed is kept at 900 – 1,300 rpm for 10 seconds, check that it returns to the idle speed.

(d) Stop the engine.

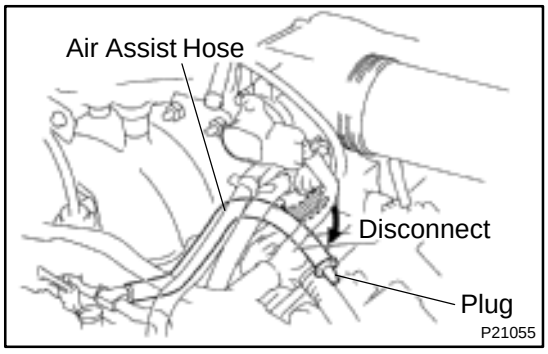

(e) Disconnect the air assist hose from the IAC valve, and plug it.

(f) Start the engine and check that the idle speed reaches 500 rpm or below (the engine may stall).

If the idle does not reach 500 rpm or below, check for a leak between the air assist hoses, pipe and injectors.

(g) Remove the SST from the DLC1.
SST 09843–18020

(h) Reconnect the air assist hose to the IAC valve.

SF051–04

REMOVAL

1. REMOVE THROTTLE BODY (See page SF–32)

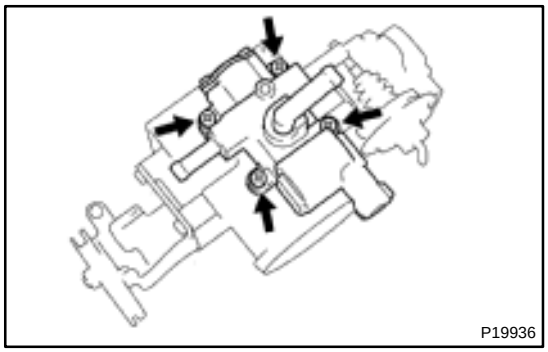

2. REMOVE IAC VALVE

Remove the 4 screws, IAC valve and gasket.

HINT:

At the time of installation, please refer to the following items.

Place a new gasket on the throttle body.

INJECTOR

COMPONENTS

SF04K–04

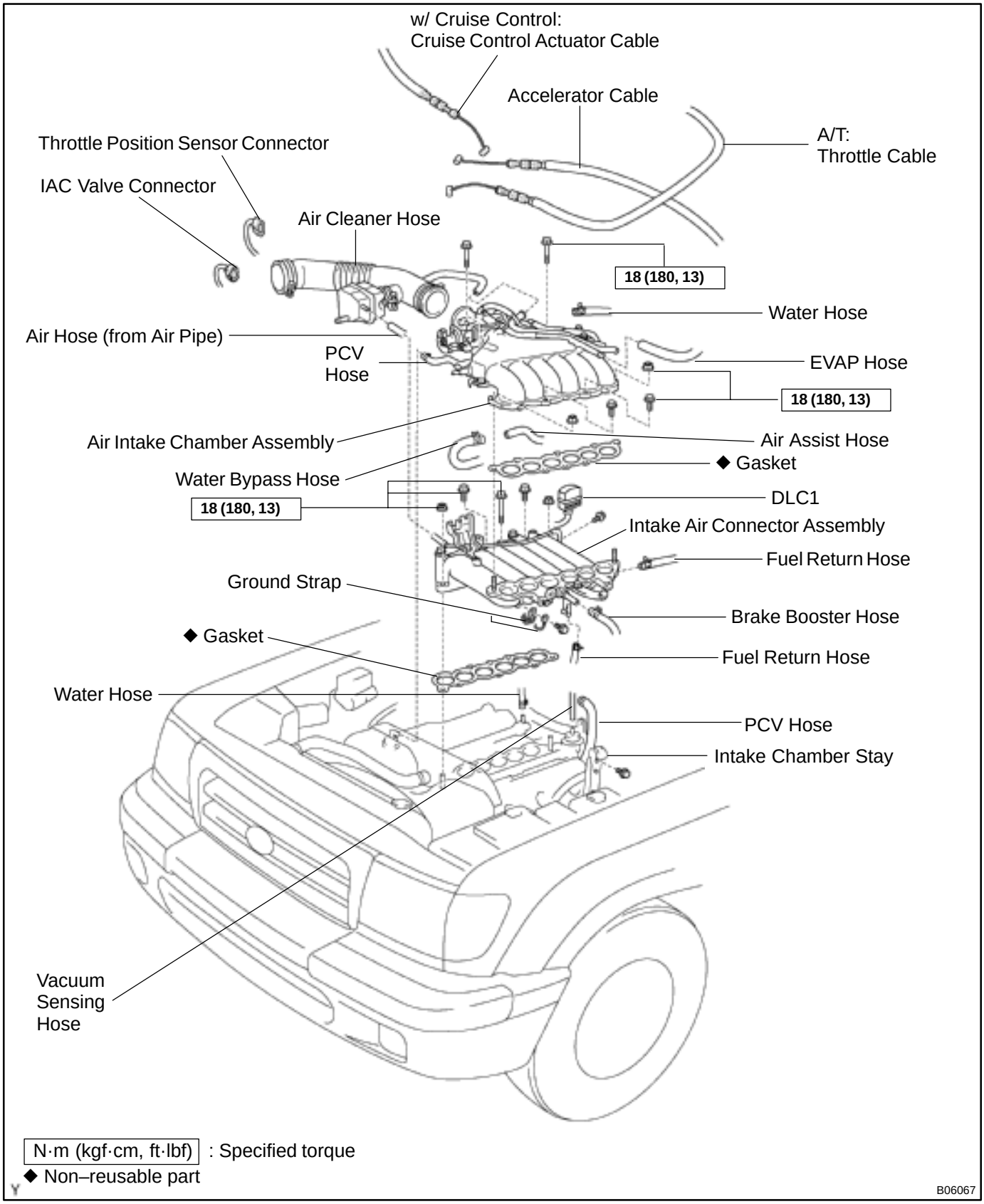

N·m (kgf·cm, ft·lbf) : Specified torque
◆ Non–reusable part

B06067

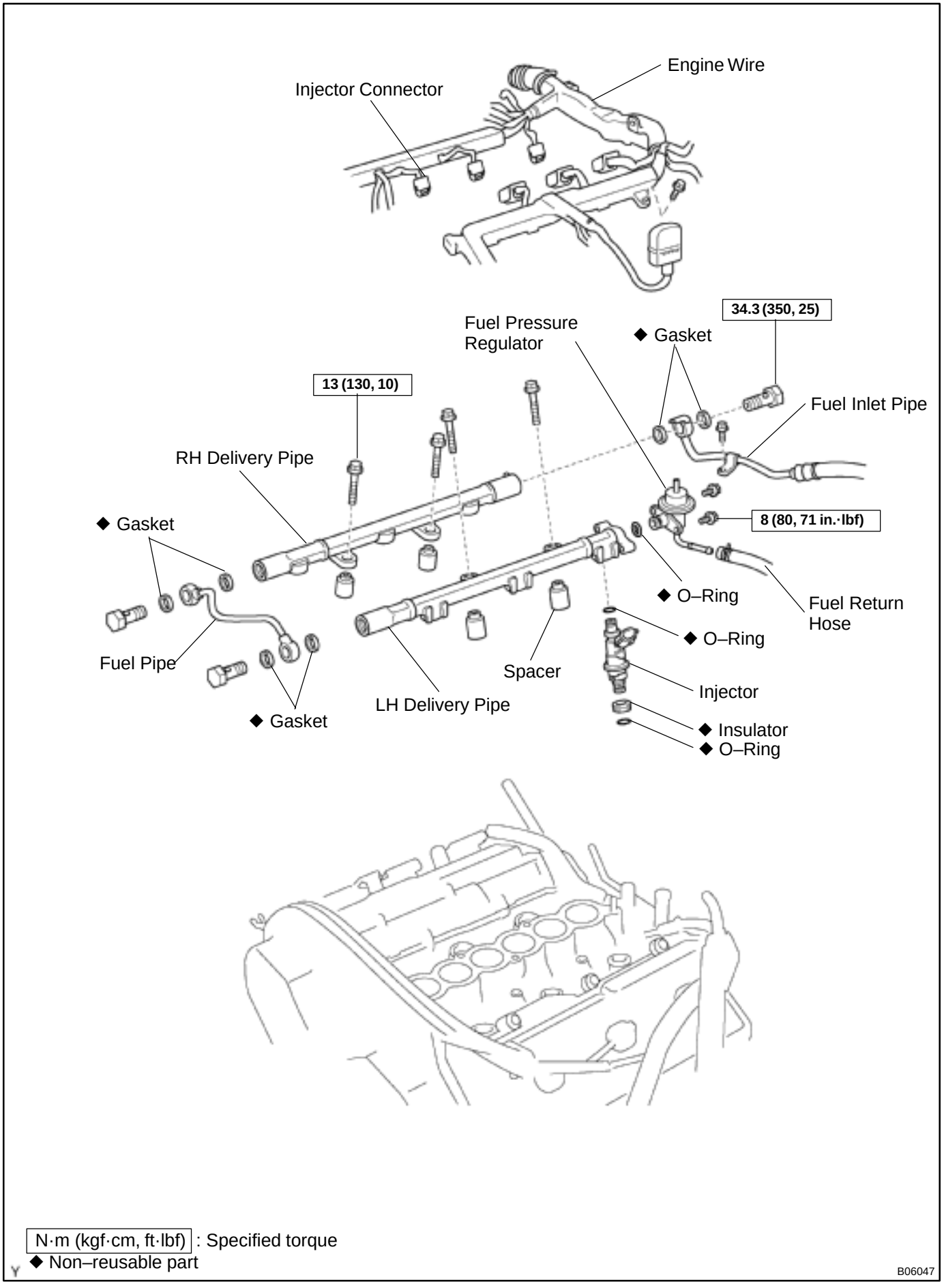
Engine Wire
Injector Connector
34.3 (350, 25)
Fuel Pressure Regulator
◆ Gasket
13 (130, 10)
Fuel Inlet Pipe
RH Delivery Pipe
◆ Gasket
8 (80, 71 in.·lbf)
◆ O–Ring
Fuel Return Hose
◆ O–Ring
Fuel Pipe
Spacer
Injector
LH Delivery Pipe
◆ Gasket
◆ Insulator
◆ O–Ring
N·m (kgf·cm, ft·lbf) : Specified torque
◆ Non–reusable part
B06047

SF10A–03

INSPECTION

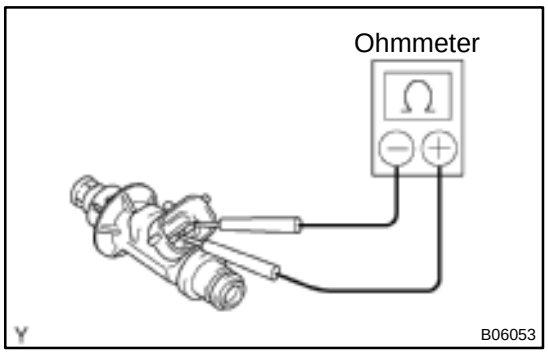

1. INSPECT INJECTOR RESISTANCE

Using an ohmmeter, measure the resistance between the terminals.

Resistance: Approx. 13.8 Ω at 20°C (68°F)

If the resistance is not as specified, replace the injector.

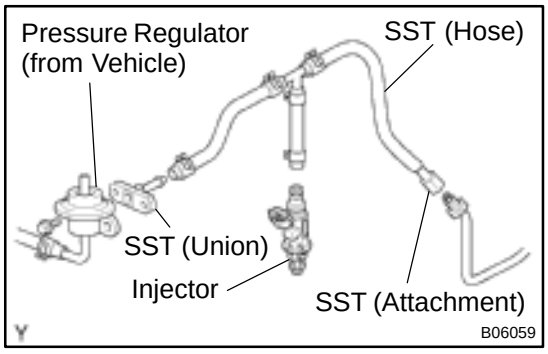

2. INSPECT INJECTOR INJECTION

CAUTION:

Keep injector clear of sparks during the test.

(a) Disconnect the fuel inlet pipe from the fuel tube.

(b) Connect SST (attachment and hose) to the fuel tube.
SST 09268–41047 (09268–52011)

(c) Connect the fuel return hose, SST (union) and SST (hose) to the fuel pressure regulator.
SST 09268–41047 (09268–41091)

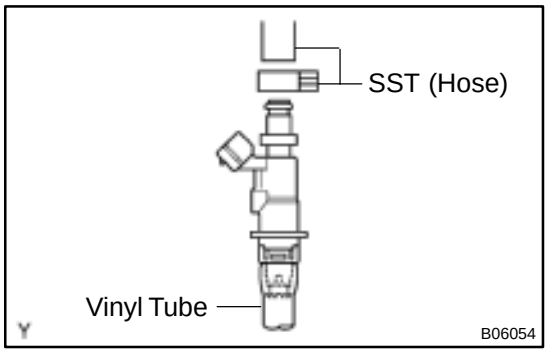

(d) Connect SST (hose) to the injector.
SST 09268–41047

(e) Put the injector into the graduated cylinder.

HINT:

Install a suitable vinyl hose onto the injector to prevent gasoline from splashing out.

(f) Connect a TOYOTA hand–held tester to the DLC3.
(See page EM–9)

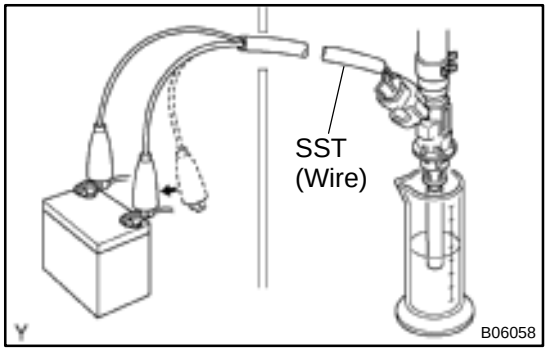

(g) Connect SST (wire) to the injector and battery for 15 seconds, and measure the injection volume with a graduated cylinder. Test each injector 2 or 3 times.
SST 09842–30070
Volume: 56 – 69 cm^3 (3.4 – 4.2 cu in.) per 15 sec.
Difference between each injector:
1.3 cm^3 (0.08 cu in.) or less

If the injection volume is not as specified, replace the injector.

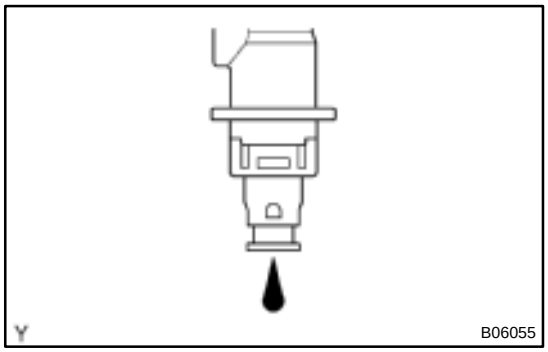

3. INSPECT LEAKAGE

(a) In the condition above, disconnect the tester probes of SST (wire) from the battery and check the fuel leakage from the injector.
SST 09842–30070
Fuel drop: 1 drop or less per 12 minutes

(b) Turn the ignition switch OFF.

(c) Disconnect the negative (–) terminal cable from the battery.

(d) Remove the SST.
SST 09268–41047, 09842–30070

(e) Disconnect the TOYOTA hand–held tester from the DLC3.

SF04N–05

INSTALLATION

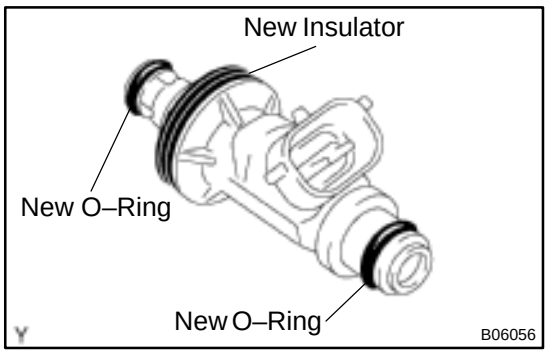

1. INSTALL INJECTORS AND DELIVERY PIPES

(a) Install a new insulator to each injector.

(b) Apply a light coat of spindle oil or gasoline to 2 new O–rings and install them to each injector.

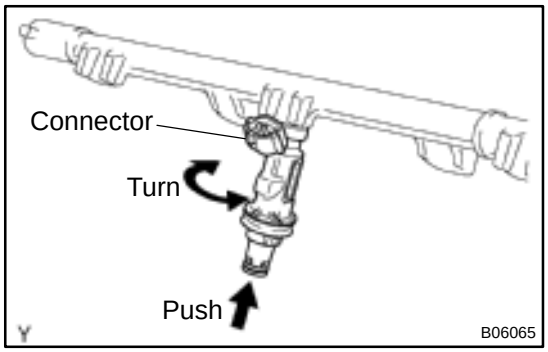

(c) While turning the injector clockwise and counterclockwise, push it to the delivery pipes. Install the 6 injectors.

(d) Position the injector connector outward.

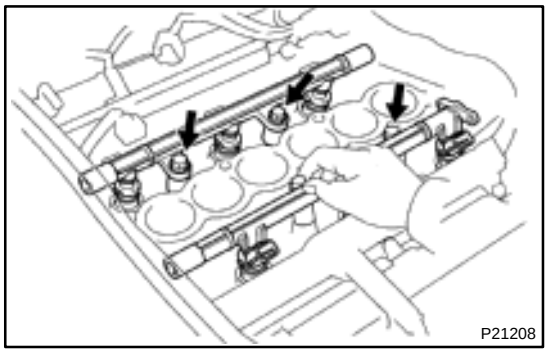

(e) Place the 4 spacers in position on the intake manifold.

(f) Place the delivery pipes with the 6 injectors in position on the intake manifold.

(g) Temporarily install the 4 bolts holding the delivery pipes to the intake manifold.

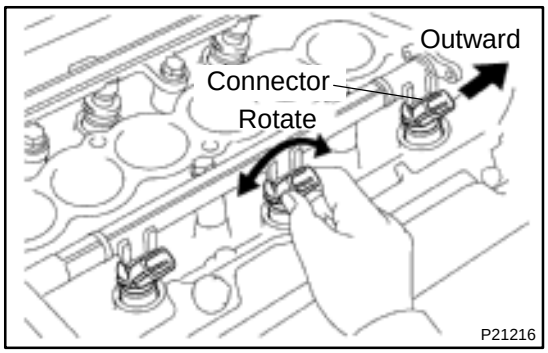

(h) Check that the injectors rotate smoothly.

HINT:

If injectors do not rotate smoothly, the probable cause is incorrect installation of O–rings. Replace the O–rings.

(i) Position the injector connector outward.

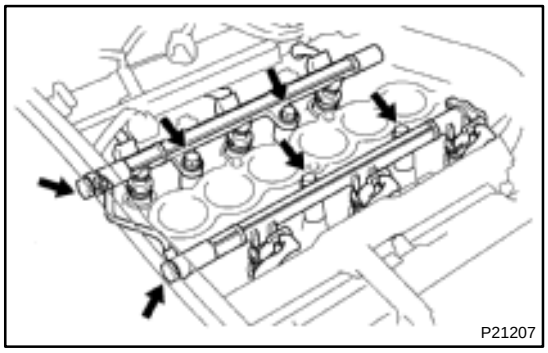

2. CONNECT INJECTOR CONNECTORS

3. INSTALL FUEL PIPE AND TIGHTENING DELIVERY PIPE HOLDING BOLTS

(a) Install the fuel pipe with 4 new gaskets and the 2 union bolts.

Torque: 34.3 N·m (350 kgf·cm, 25 ft·lbf)

(b) Tighten the 4 bolts holding the delivery pipes to the intake manifold.

Torque: 13 N·m (130 kgf·cm, 10 ft·lbf)

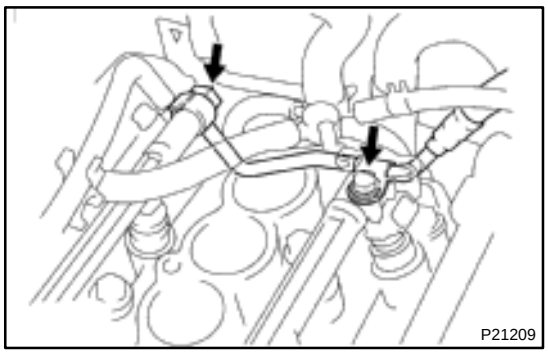

4. CONNECT FUEL INLET PIPE

(a) Temporarily install the inlet pipe with 2 new gaskets, union bolt and bolt.

(b) Tighten the clamp bolt.
Torque: 8 N·m (80 kgf·cm, 71 in.·lbf)

(c) Tighten the union bolt.
Torque: 34.3 N·m (350 kgf·cm, 25 ft·lbf)

5. INSTALL FUEL PRESSURE REGULATOR
(See page SF–16)

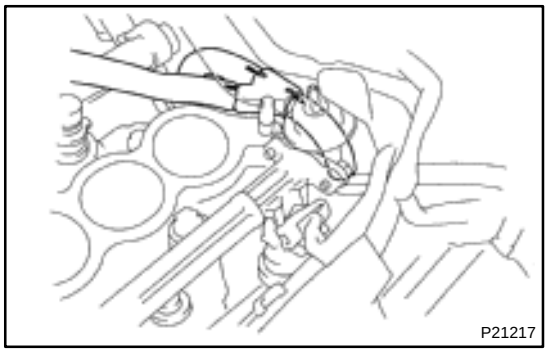

6. INSPECT AIR ASSIST LINES AND CONNECTIONS

Visually check for loose connections, sharp bends or damage.

7. INSTALL INTAKE AIR CONNECTOR ASSEMBLY
(See page EM–53)

8. INSTALL AIR CLEANER HOSE

9. CHECK FOR FUEL LEAKS (See page SF–1)

SF04L–05

REMOVAL

1. REMOVE AIR CLEANER HOSE

2. REMOVE INTAKE AIR CONNECTOR ASSEMBLY (See page EM–30)

3. REMOVE FUEL PRESSURE REGULATOR (See page SF–15)

4. DISCONNECT FUEL INLET PIPE

CAUTION:

Catch leaking fuel in a container.

5. REMOVE FUEL PIPE

6. DISCONNECT INJECTOR CONNECTORS

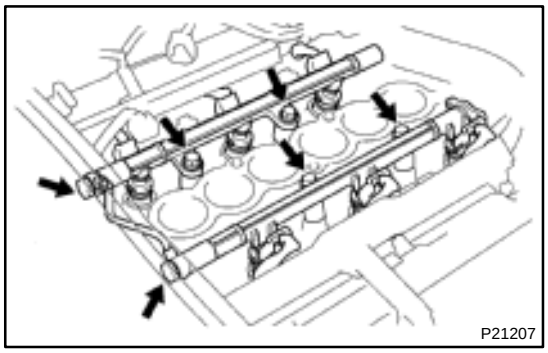
P21207

7. REMOVE DELIVERY PIPES AND INJECTORS

NOTICE:

- **Be careful not to drop the injectors when removing the delivery pipes.**
- **Pay attention to put any hung load on the injector to and from the side direction.**

(a) Remove the 4 bolts and delivery pipes together with the 6 injectors

(b) Remove the 4 spacers from the intake manifold.

(c) Pull out the 6 injectors from the delivery pipes.

(d) Remove the 2 O–rings and insulator from each injector.

KNOCK SENSOR

COMPONENTS

SF05C–05

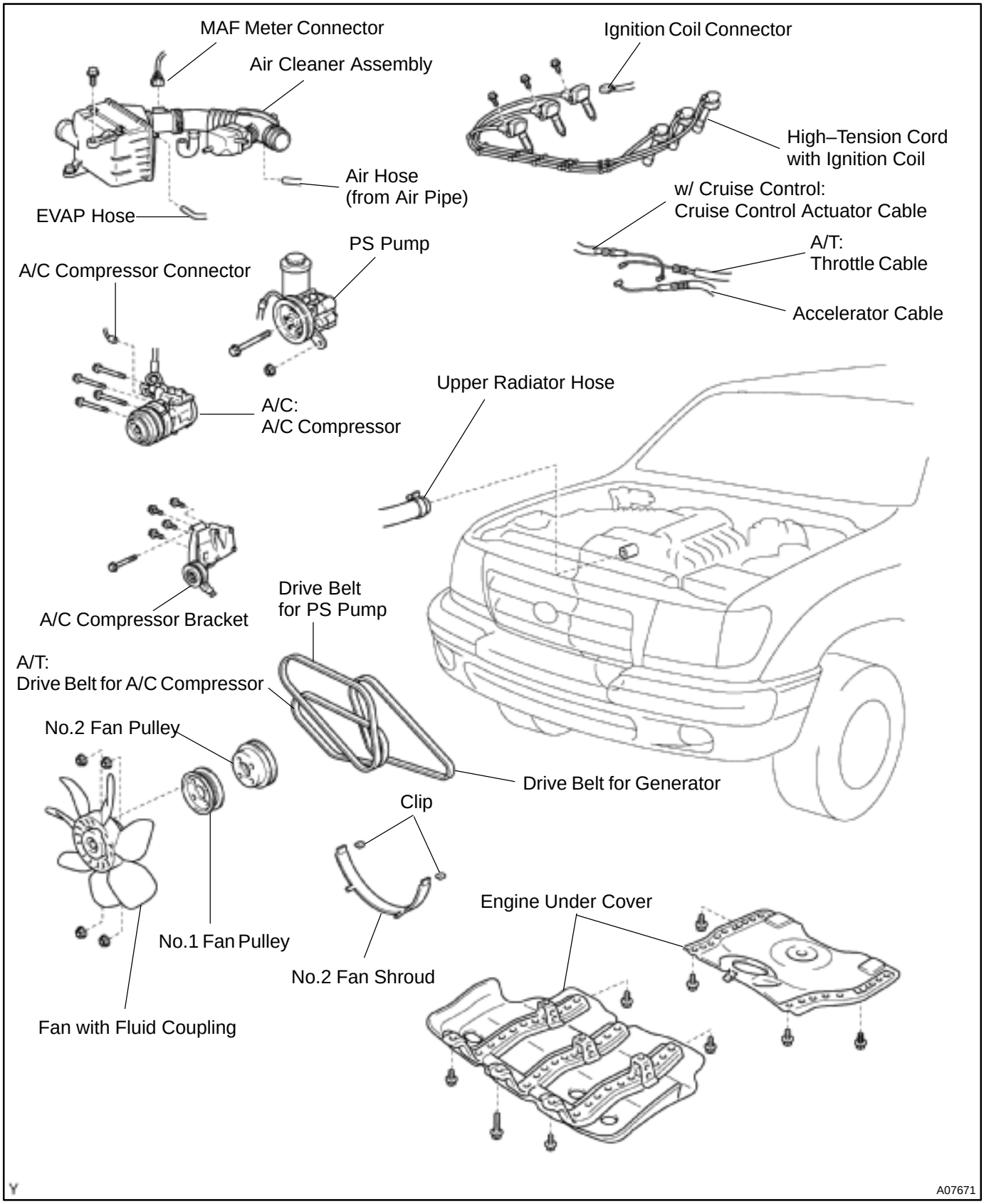

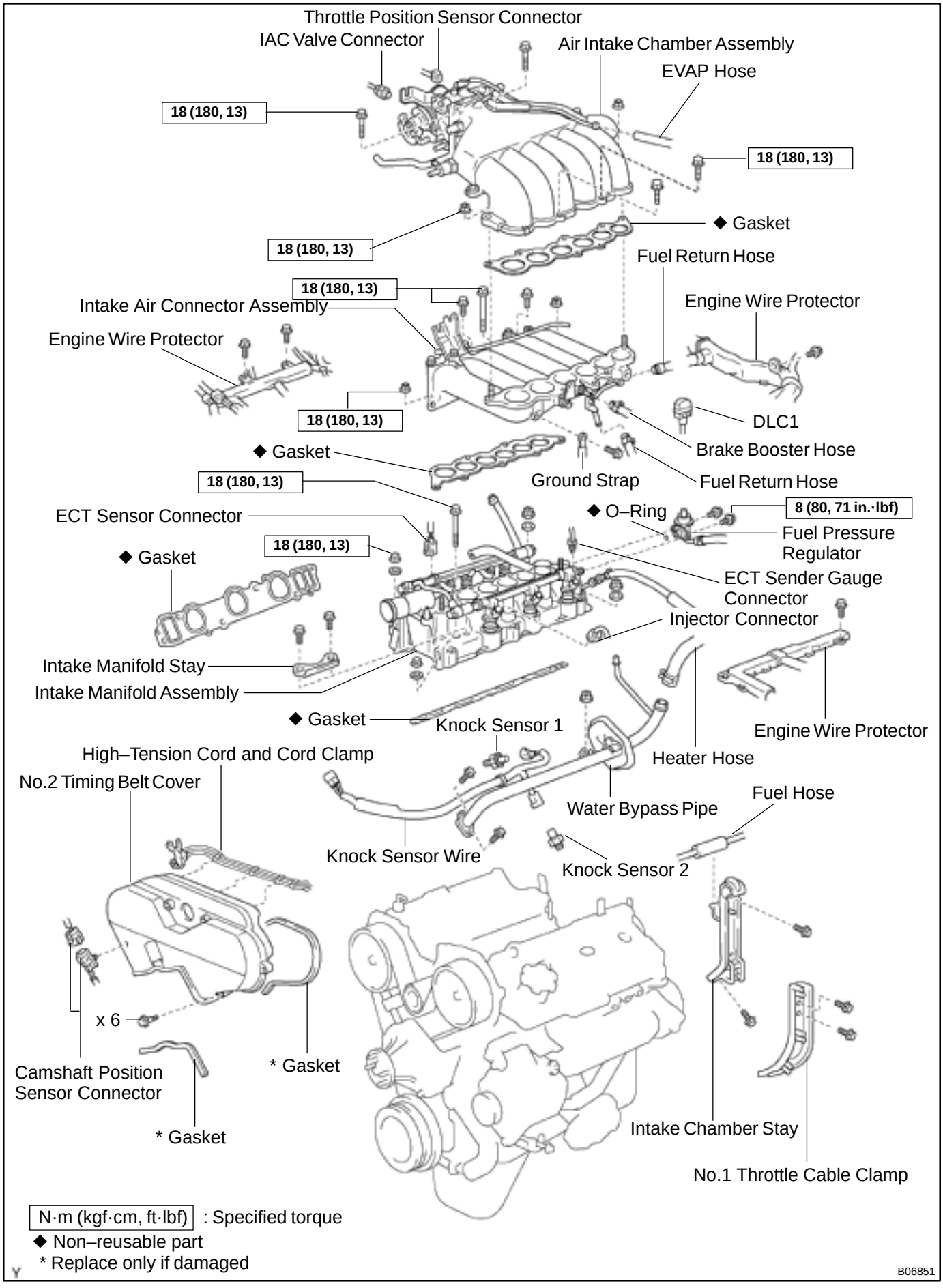
Throttle Position Sensor Connector
IAC Valve Connector
Air Intake Chamber Assembly
EVAP Hose
18 (180, 13)
18 (180, 13)
◆ Gasket
18 (180, 13)
Fuel Return Hose
18 (180, 13)
Intake Air Connector Assembly
Engine Wire Protector
Engine Wire Protector
18 (180, 13)
DLC1
Brake Booster Hose
◆ Gasket
Ground Strap
Fuel Return Hose
18 (180, 13)
ECT Sensor Connector
◆ O–Ring
8 (80, 71 in.·lbf)
Fuel Pressure Regulator
18 (180, 13)
◆ Gasket
ECT Sender Gauge Connector
Injector Connector
Intake Manifold Stay
Intake Manifold Assembly
◆ Gasket
Knock Sensor 1
Engine Wire Protector
High–Tension Cord and Cord Clamp
No.2 Timing Belt Cover
Heater Hose
Water Bypass Pipe
Fuel Hose
Knock Sensor Wire
Knock Sensor 2
x 6
Camshaft Position Sensor Connector
* Gasket
* Gasket
Intake Chamber Stay
No.1 Throttle Cable Clamp
N·m (kgf·cm, ft·lbf) : Specified torque
◆ Non–reusable part
* Replace only if damaged
B06851

SF05D–07

INSPECTION

1. **DRAIN ENGINE COOLANT**
2. **REMOVE AIR CLEANER HOSE**
3. **REMOVE NO.2 TIMING BELT COVER (See page EM–13)**
4. **REMOVE INTAKE AIR CONNECTOR ASSEMBLY (See page EM–67)**
5. **REMOVE FUEL PRESSURE REGULATOR (See page SF–15)**
6. **REMOVE INTAKE MANIFOLD ASSEMBLY (See page EM–30)**
7. **REMOVE WATER BYPASS PIPE AND KNOCK SENSOR WIRE (See page EM–30)**

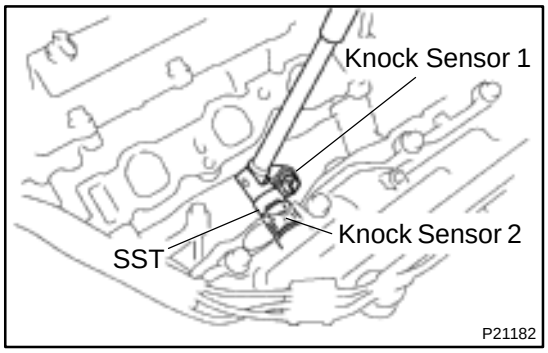

8. **REMOVE KNOCK SENSORS**

Using SST, remove the knock sensor.

SST 09817–16011

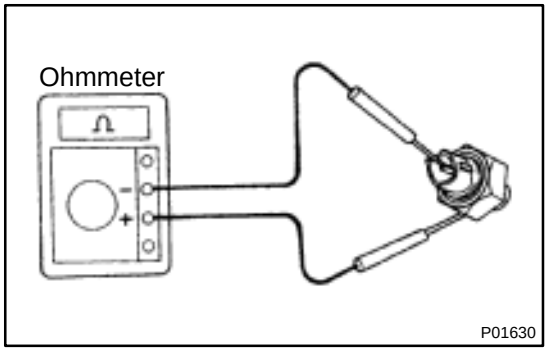

9. **INSPECT KNOCK SENSORS**

Using an ohmmeter, check that there is no continuity between the terminal and body.

If there is continuity, replace the sensor.

10. **REINSTALL KNOCK SENSORS**

Using SST, install the knock sensor.

SST 09817–16011

Torque: 39 N·m (400 kgf·cm, 29 ft·lbf)

11. **REINSTALL WATER BYPASS PIPE AND KNOCK SENSOR WIRE (See page EM–53)**
12. **REINSTALL INTAKE MANIFOLD ASSEMBLY (See page EM–39)**
13. **REINSTALL FUEL PRESSURE REGULATOR (See page SF–16)**
14. **REINSTALL INTAKE AIR CONNECTOR ASSEMBLY (See page EM–78)**
15. **REINSTALL NO.2 TIMING BELT COVER (See page EM–19)**
16. **REINSTALL AIR CLEANER HOSE**
17. **REFILL WITH ENGINE COOLANT**

SF04S–04

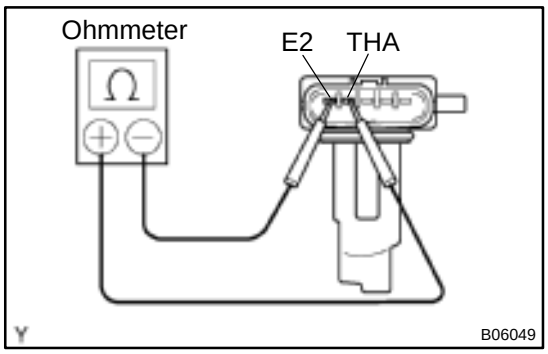

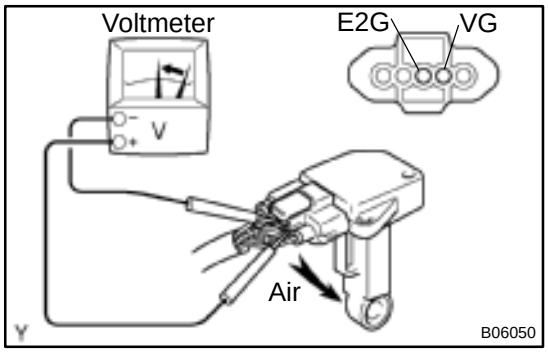

INSPECTION

1. INSPECT MAF METER RESISTANCE

Using an ohmmeter, measure the resistance between terminals THA and E2.

Temperature	Resistance
at –20˚C (–4˚F)	13.6 – 18.4 kΩ
at 20˚C (68˚F)	2.2 – 2.7 kΩ
at 60˚C (140˚F)	0.5 – 0.7 kΩ

If the resistance is not as specified, replace the MAF meter.

2. INSPECT MAF METER OPERATION

(a) Connect the MAF meter connector.
(b) Using a voltmeter, connect the positive (+) tester probe to terminal VG, and negative (–) tester probe to terminal E2G.
(c) Turn the ignition switch ON.
(d) Blow air into the MAF meter, and check that the voltage fluctuates.

If operation is not as specified, replace the MAF meter.

(e) Turn the ignition switch OFF.
(f) Disconnect the MAF meter connector.

SF10B–02

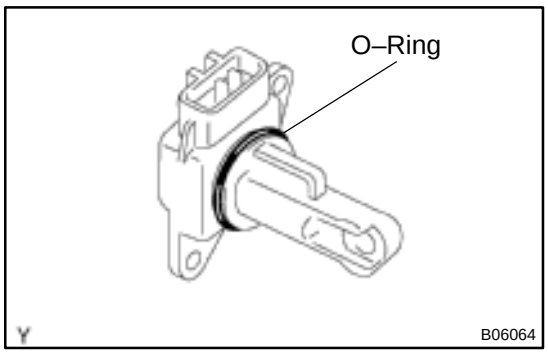

INSTALLATION

1. INSTALL MAF METER

(a) Install the O–ring to the MAF meter.

(b) Install the MAF meter with the 2 screws.

2. INSTALL AIR CLEANER CASE

(a) Install the air cleaner case with the 3 bolts.

(b) Connect the MAF meter connector.

(c) Connect the air cleaner hose.

MASS AIR FLOW (MAF) METER

SF04R–04

REMOVAL

1. REMOVE AIR CLEANER CASE

(a) Disconnect the air cleaner hose.
(b) Disconnect the MAF meter connector.
(c) Remove the 3 bolts and air cleaner case.

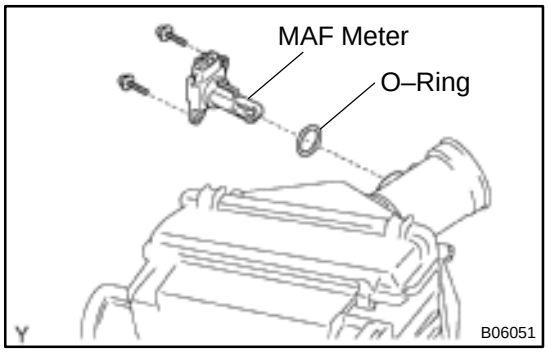

2. REMOVE MAF METER

(a) Remove the 2 screws and MAF meter.
(b) Remove the O–ring from the MAF meter.

HEATED OXYGEN SENSOR

SF178–01

COMPONENTS

Except California Spec.
(Bank 1 Sensor 1)

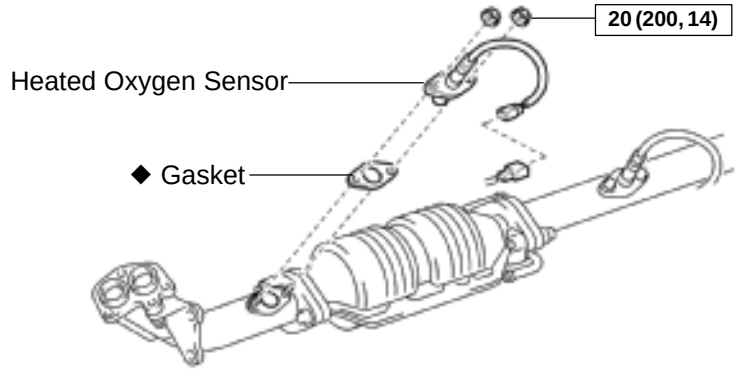

P

Except California Spec.
(Bank 1 Sensor 2)

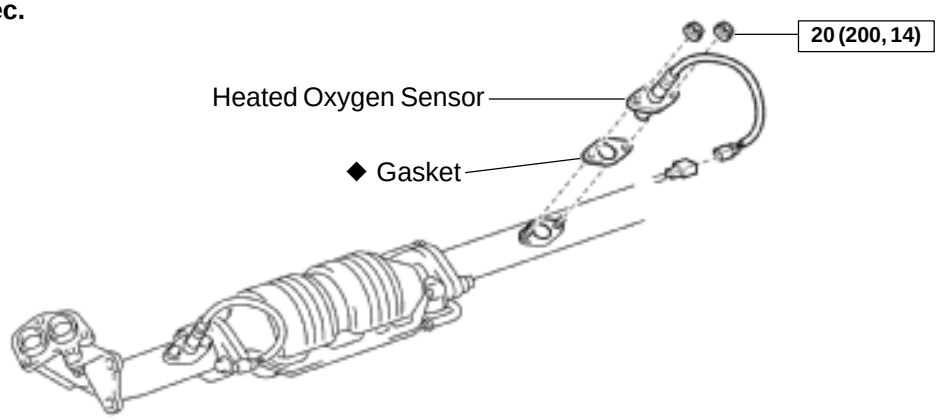

P

California Spec.
(Bank 1 Sensor 2)

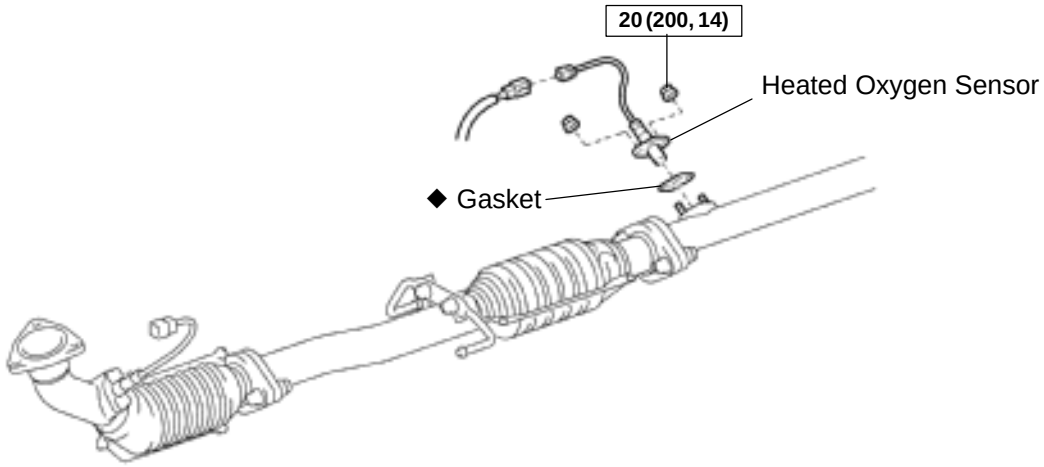

B09854

P N·m (kgf·cm, ft·lbf) : Specified torque
◆ Non–reusable part

B10009

SF179–01

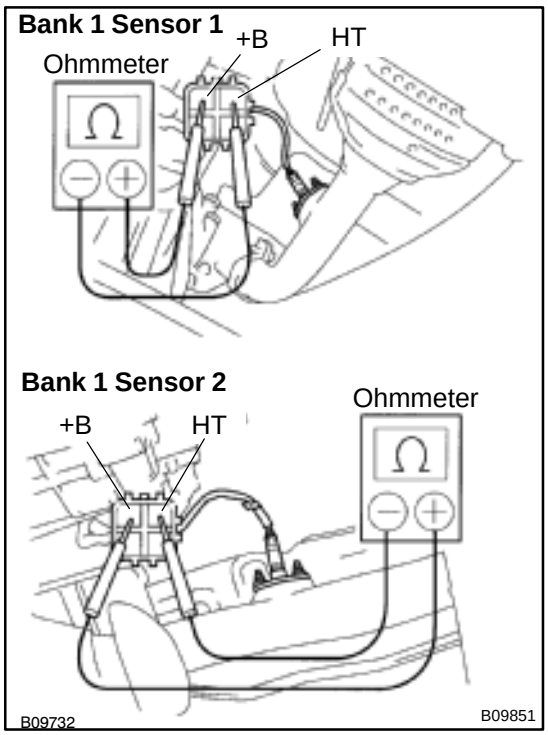

INSPECTION

1. INSPECT HEATER RESISTANCE OF HEATED OXYGEN SENSOR

(a) Disconnect the sensor connector.

(b) Using an ohmmeter, measure the resistance between terminals +B and HT.

Resistance:

at 20°C (68°F)	11 – 16 Ω
at 800°C (1,472°F)	23 – 32 Ω

If the resistance is not as specified, replace the sensor.

Torque: 20 N·m (200 kgf·cm, 14 ft·lbf)

(c) Reconnect the oxygen sensor connector.

2. Bank 1 Sensor 1:
INSPECT OPERATION OF HEATED OXYGEN SENSOR (See page DI–234)

3. Bank 1 Sensor 2:
INSPECT OPERATION OF HEATED OXYGEN SENSOR (See page DI–243)

SF04V–04

COMPONENTS

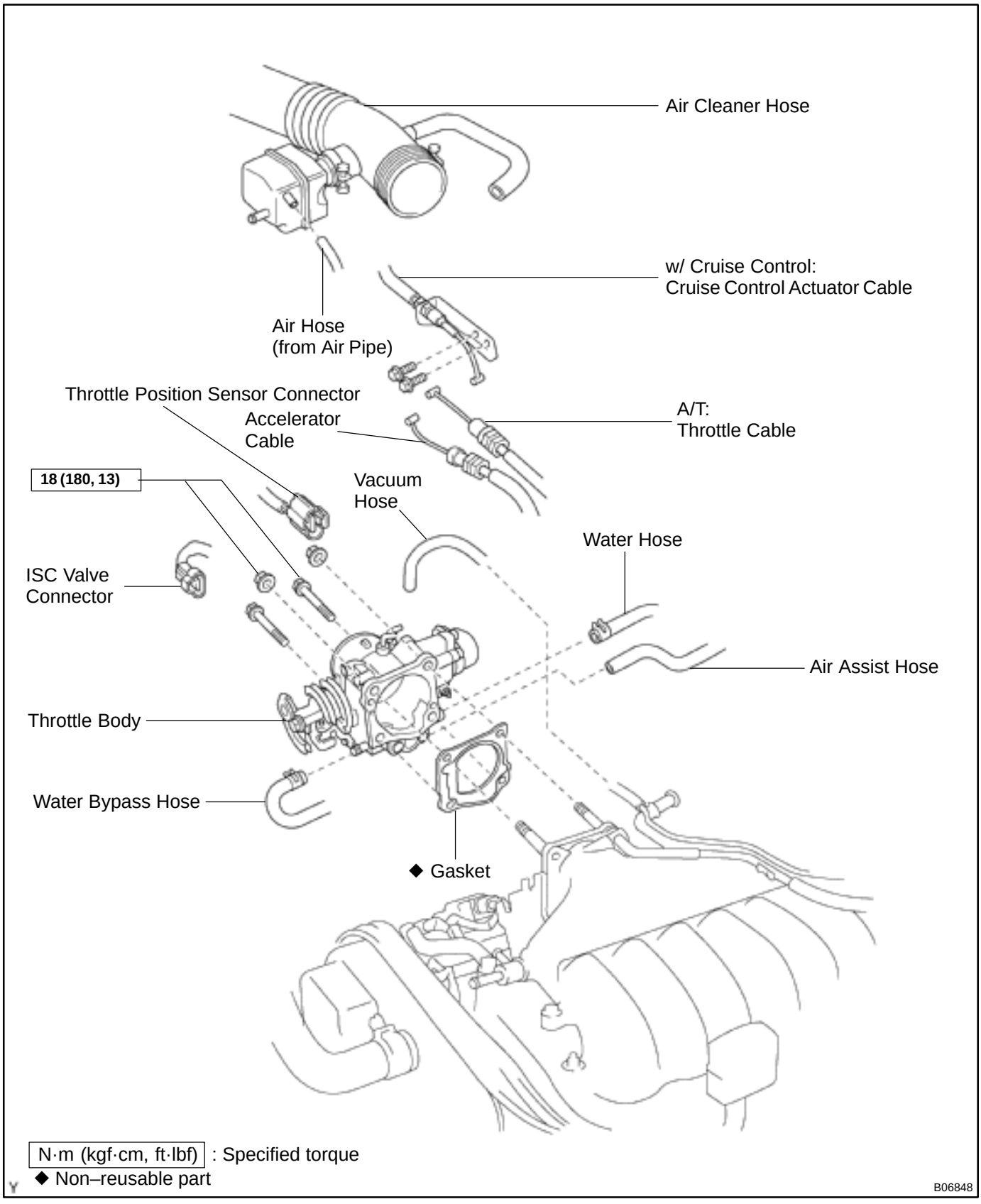

SF04X–04

INSPECTION

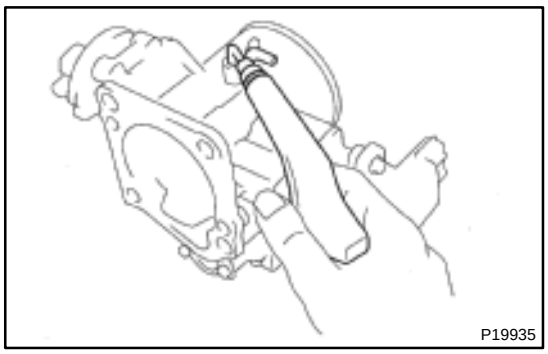

1. CLEAN THROTTLE BODY

(a) Using a soft brush and carburetor cleaner, clean the cast parts.

(b) Using compressed air, clean all the passages and apertures.

NOTICE:

To prevent deterioration, do not clean the throttle position sensor and IAC valve.

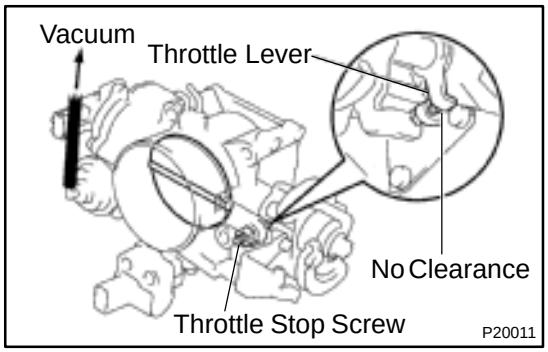

2. INSPECT THROTTLE VALVE

(a) Apply vacuum to the throttle opener.

(b) Check that there is no clearance between the throttle stop screw and throttle lever when the throttle valve is fully closed.

Throttle valve fully closed angle: 10°

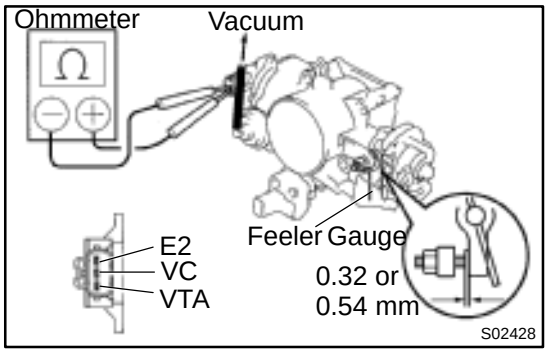

3. INSPECT THROTTLE POSITION SENSOR

(a) Apply vacuum to the throttle opener.

(b) Insert a feeler gauge between the throttle stop screw and stop lever.

(c) Using an ohmmeter, measure the resistance between each terminal.

Clearance between lever and stop screw	Between terminals	Resistance
0 mm (0 in.)	VTA – E2	0.2 – 5.7 kΩ
Throttle valve fully open	VTA – E2	2.0 – 10.2 kΩ
–	VC – E2	2.5 – 5.9 kΩ

SF10E–01

INSTALLATION

Installation is in the reverse order of removal. (See page SF–32)

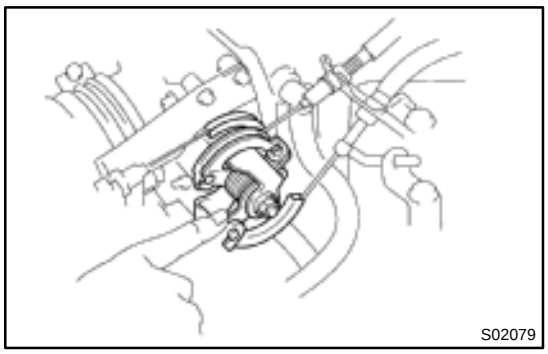

THROTTLE BODY

SF10C–02

ON–VEHICLE INSPECTION

1. INSPECT THROTTLE BODY

Check that the throttle linkage moves smoothly.

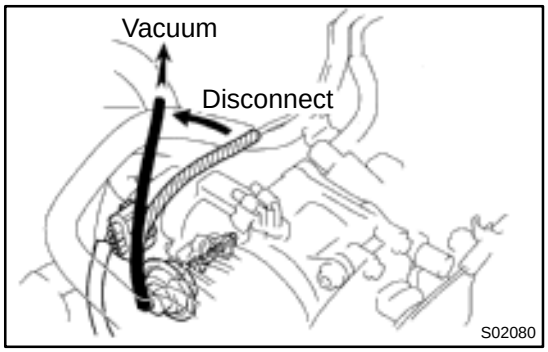

2. INSPECT THROTTLE POSITION SENSOR

(a) Apply vacuum to the throttle opener.

(b) Disconnect the sensor connector.

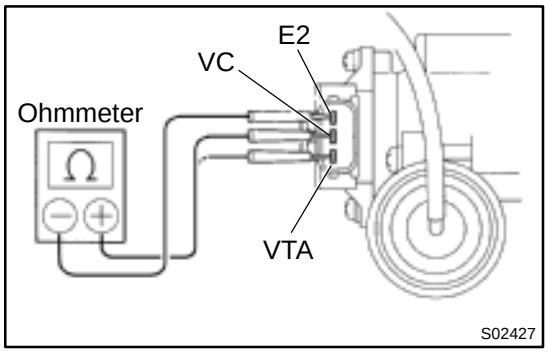

(c) Using an ohmmeter, measure the resistance between each terminal.

Throttle valve condition	Between terminals	Resistance
Fully closed	VTA – E2	0.2 – 5.7 kΩ
Fully open	VTA – E2	2.0 – 10.2 kΩ
–	VC – E2	2.5 – 5.9 kΩ

(d) Reconnect the sensor connector.

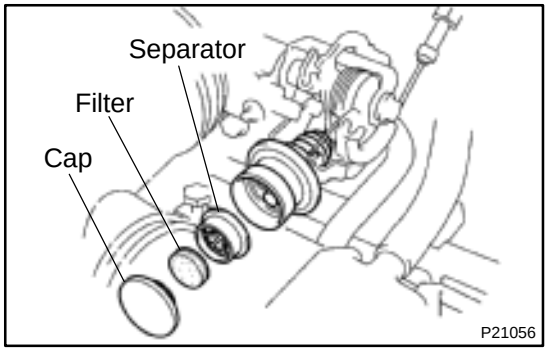

3. M/T:
INSPECT DASHPOT (DP)

(a) Allow the engine to warm up to normal operating temperature.

(b) Check the idle speed.
Idle speed: 700 ± 50 rpm

(c) Remove the cap, filter and separator from the DP.

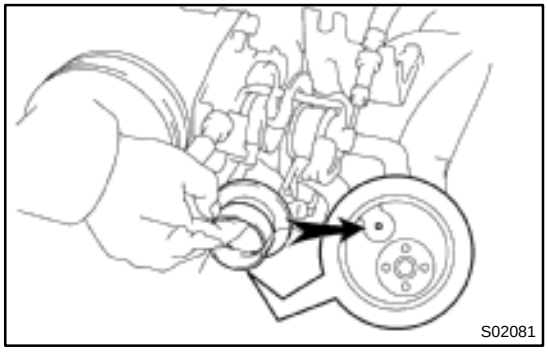

(d) Maintain the engine speed at 2,500 rpm or more.

(e) Plug the VTV hole with your finger.

(f) Release the throttle valve.

(g) Check the DP is set.
DP setting speed: 1,800 – 2,200 rpm

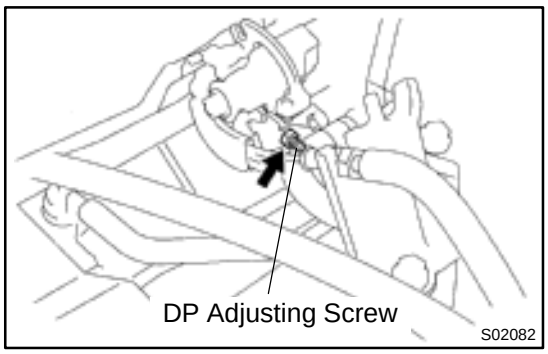

(h) If the setting speed is not as specified, adjust it with the DP adjusting screw.
(i) Remove your finger from the hole and check that the engine returns to the idle speed in approx. 1 second.
(j) Reinstall the DP separator, filter and cap.

HINT:

Install the filter with the coarser surface facing the atmospheric side (outward).

4. INSPECT THROTTLE OPENER

(a) Allow the engine to warm up to normal operating temperature.
(b) Check the idle speed.
Idle speed: 700 ± 50 rpm

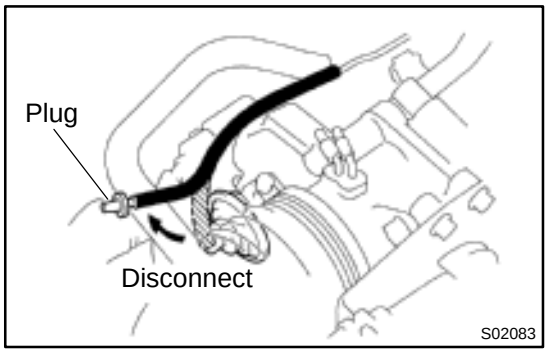

(c) Disconnect the vacuum hose from the throttle opener, and plug the hose end.
(d) Check the throttle opener setting speed.
Throttle opener setting speed: 900 – 1,950 rpm

If the throttle opener setting is not as specified, replace the throttle body.

(e) Stop the engine.
(f) Reconnect the vacuum hose to the throttle opener.
(g) Start the engine and check that the idle speed returns to the correct speed.

SF10D–03

REMOVAL

1. DRAIN ENGINE COOLANT

2. DISCONNECT CABLES:

(a) w/ Cruise Control:
Disconnect the cruise control actuator cable.

(b) Disconnect the accelerator cable.

(c) A/T:
Disconnect the throttle cable.

3. REMOVE AIR CLEANER HOSE

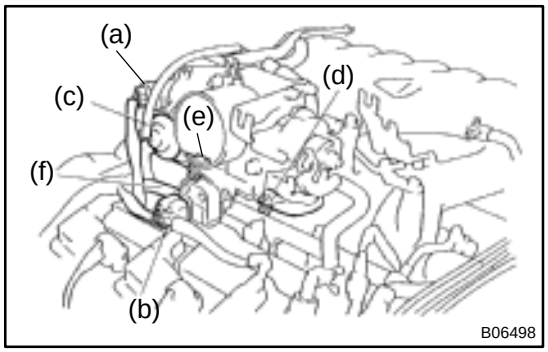

4. REMOVE THROTTLE BODY

(a) Disconnect the throttle position sensor connector.

(b) Disconnect the IAC valve connector.

(c) Disconnect the vacuum hose for the throttle opener.

(d) Disconnect the water bypass hose (from water bypass pipe).

(e) Disconnect the water hose (from intake manifold).

(f) Disconnect the air assist hose.

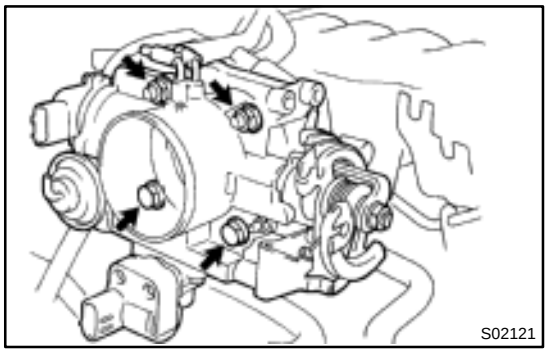

(g) Remove the 2 bolts, 2 nuts, throttle body and gasket.
Torque: 18 N·m (180 kgf·cm, 13 ft·lbf)

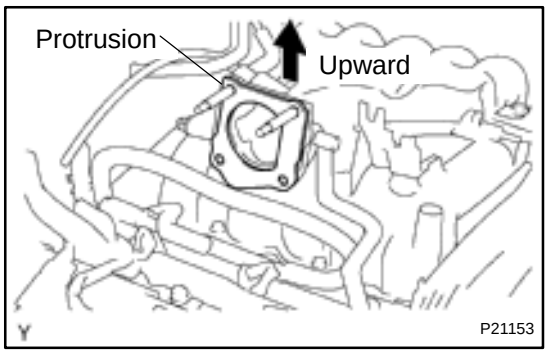

HINT:
At the time of installation, plaese refer to the following items. Place a new gasket on the air intake chamber facing the protrusion upward.

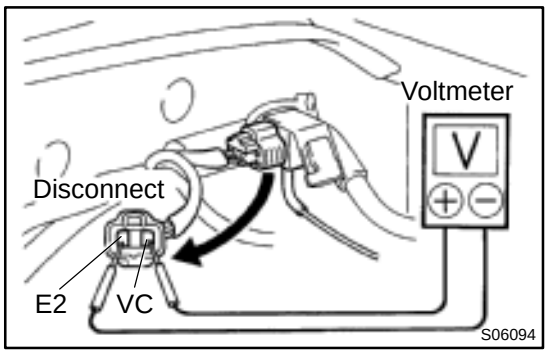

VAPOR PRESSURE SENSOR

SF05L–03

INSPECTION

1. INSPECT POWER SOURCE VOLTAGE OF VAPOR PRESSURE SENSOR

(a) Disconnect the vapor pressure sensor connector.

(b) Turn the ignition switch ON.

(c) Using a voltmeter, measure the voltage between connector terminals VC and E2 of the wiring harness side.

Voltage: 4.5 – 5.5 V

(d) Turn the ignition switch OFF.

(e) Reconnect the vapor pressure sensor connector.

2. INSPECT POWER OUTPUT OF VAPOR PRESSURE SENSOR

(a) Turn the ignition switch ON.

(b) Disconnect the vacuum hose from the vapor pressure sensor.

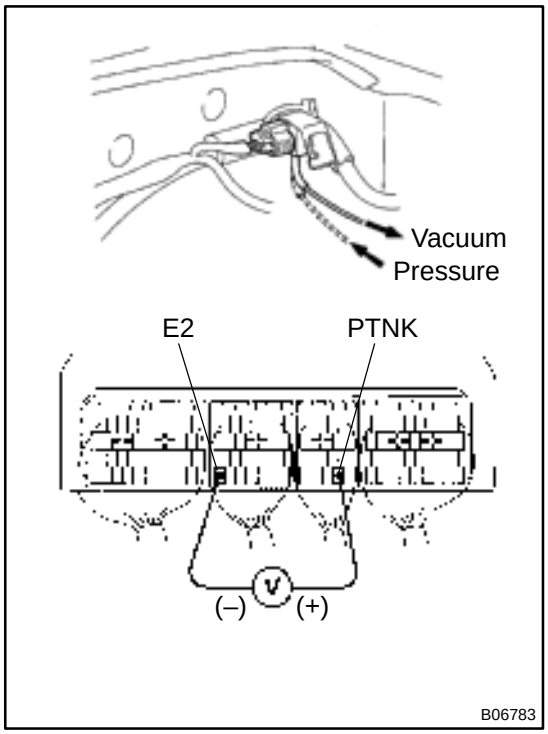

(c) Connect a voltmeter to terminals PTNK and E2 of the ECM, and measure the output voltage under ambient atmospheric pressure.

(1) Apply vacuum (2.0 kPa, 15 mmHg, 0.59 in.Hg) to the vapor pressure sensor.

Voltage: 1.3 – 2.1 V

(2) Release the vacuum from the vapor pressure sensor.

Voltage: 3.0 – 3.6 V

(3) Apply pressure (1.5 kPa, 15 gf/cm^2, 0.22 psi) to the vapor pressure sensor.

Voltage: 4.2 – 4.8 V

(d) Reconnect the vacuum hose to the vapor pressure sensor.

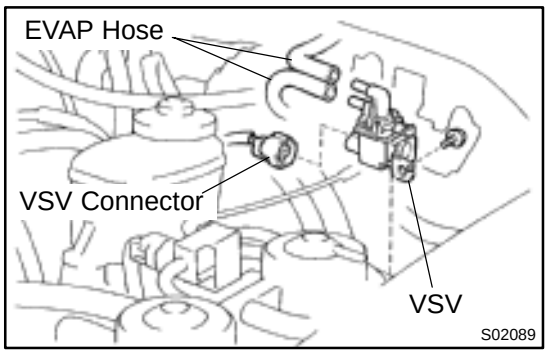

VSV FOR EVAPORATIVE EMISSION (EVAP)

SF10I–02

INSPECTION

1. REMOVE VSV

(a) Disconnect the connector and 2 EVAP hoses.

(b) Remove the screw and VSV.

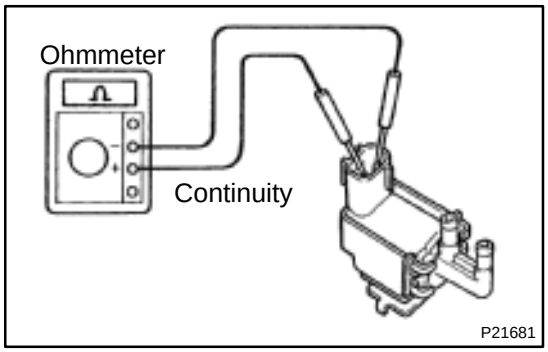

2. INSPECT VSV

(a) Inspect the VSV for open circuit.

Using an ohmmeter, check that there is continuity between the terminals.

Resistance: 30 – 34 Ω at 20˚C (68˚F)

If there is no continuity, replace the VSV.

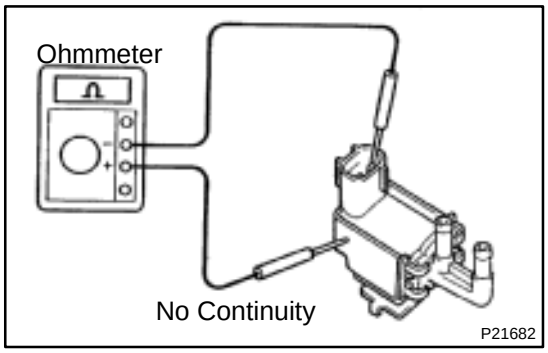

(b) Inspect the VSV for ground.

Using an ohmmeter, check that there is no continuity between each terminal and the body.

If there is continuity, replace the VSV.

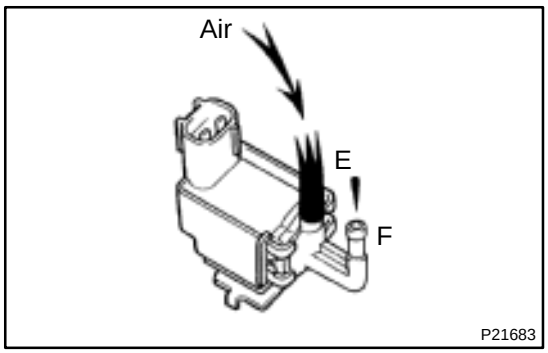

(c) Inspect the VSV operation.

(1) Check that air does not flow from ports E to F.

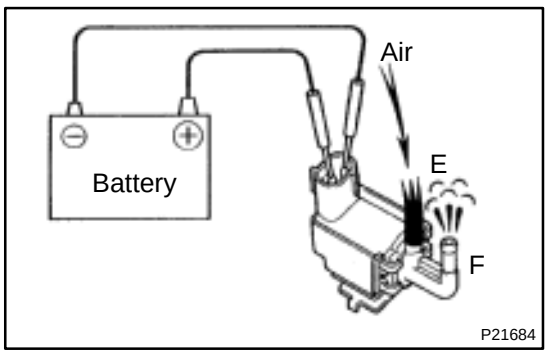

(2) Apply battery positive voltage across the terminals.

(3) Check that air flows from ports E to F.

If operation is not as specified, replace the VSV.

3. REINSTALL VSV

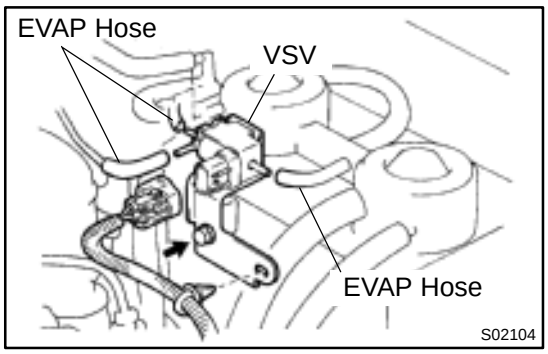

VSV FOR VAPOR PRESSURE SENSOR

SF10J–02

INSPECTION

1. REMOVE VSV

(a) Disconnect the connector and 2 vacuum hoses.

(b) Remove the bolt and VSV.

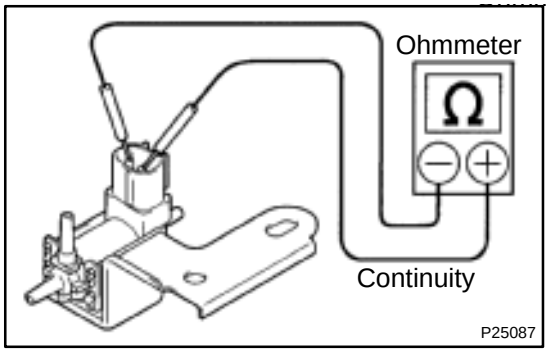

2. INSPECT VSV

(a) Inspect the VSV for open circuit.

Using an ohmmeter, check that there is continuity between the terminals.

Resistance: 37 – 44 Ω at 20˚C (68˚F)

If there is no continuity, replace the VSV.

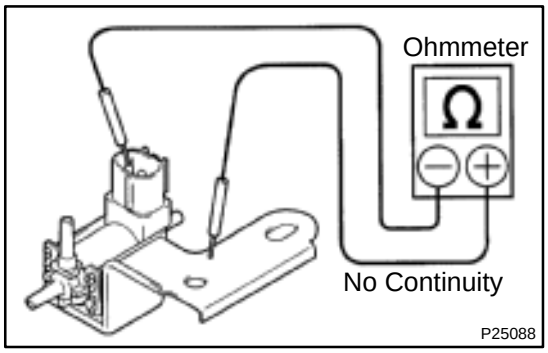

(b) Inspect the VSV for ground.

Using an ohmmeter, check that there is no continuity between each terminal and the body.

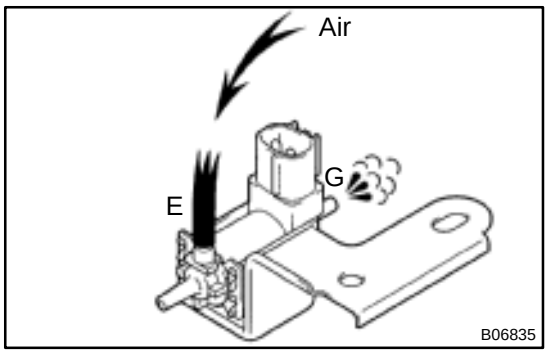

(c) Inspect the VSV operation.

(1) Check that air flows from ports E to G.

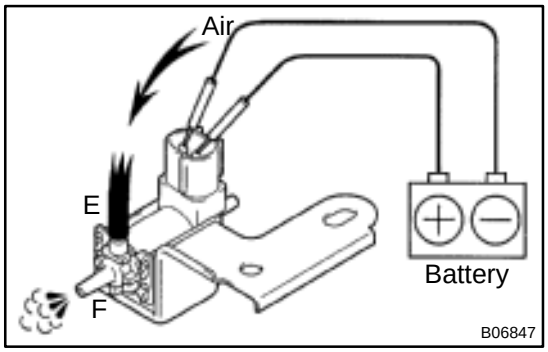

(2) Apply battery positive voltage across the terminals.

(3) Check that air flows from ports E to F.

If operation is not as specified, replace the VSV.

3. REINSTALL VSV

CAMSHAFT POSITION SENSOR

IG020–02

COMPONENTS

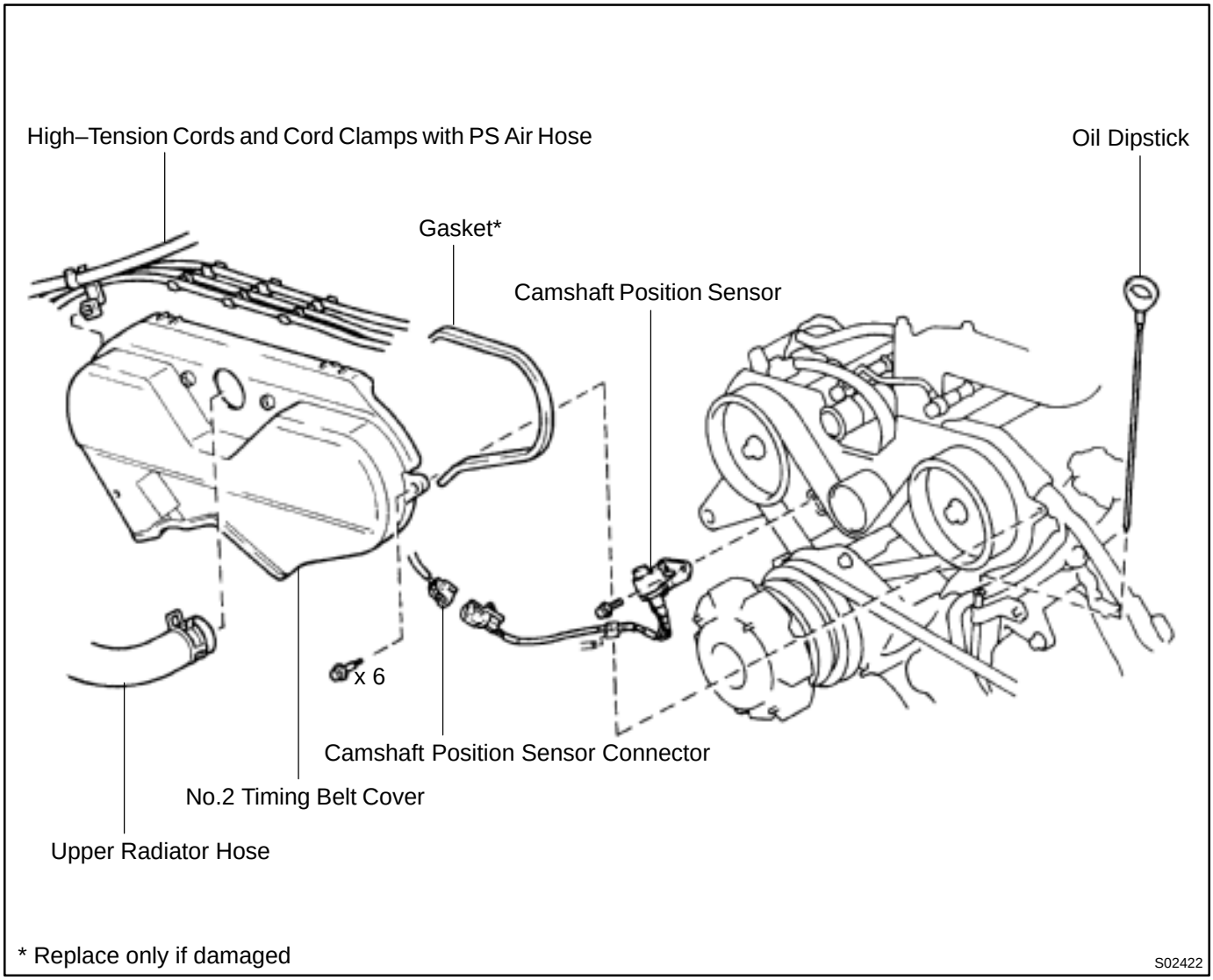

IG0FD–01

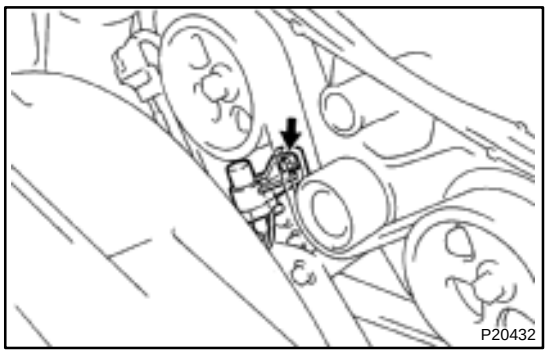

REPLACEMENT

1. REMOVE NO.2 TIMING BELT COVER
(See page EM–13)

2. REMOVE CAMSHAFT POSITION SENSOR

(a) Disconnect the sensor connector.

(b) Remove the bolt and sensor.

3. REINSTALL NEW CAMSHAFT POSITION SENSOR

(a) Install a new sensor with the bolt.
Torque: 7.8 N·m (80 kgf·cm, 69 in.·lbf)

(b) Connect the sensor connector.

4. REINSTALL NO.2 TIMING BELT COVER
(See page EM–19)

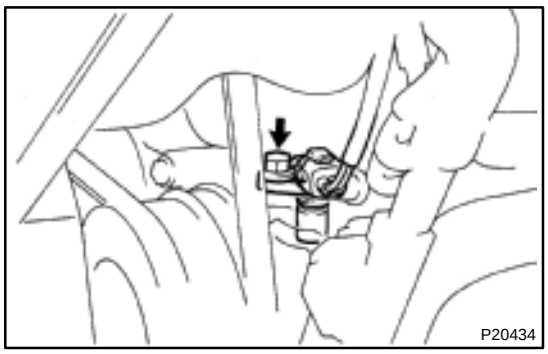

CRANKSHAFT POSITION SENSOR

IG0FE–01

REPLACEMENT

1. REMOVE ENGINE UNDER COVER

2. REMOVE CRANKSHAFT POSITION SENSOR

(a) Disconnect the sensor connector.

(b) Remove the bolt and sensor.

Torque: 7.8 N·m (80 kgf·cm, 69 in.·lbf)

3. REINSTALL NEW CRANKSHAFT POSITION SENSOR

(a) Install the sensor with the bolt.

(b) Connect the sensor connector.

4. REINSTALL ENGINE UNDER COVER

IGNITION COIL

COMPONENTS

IG01U–02

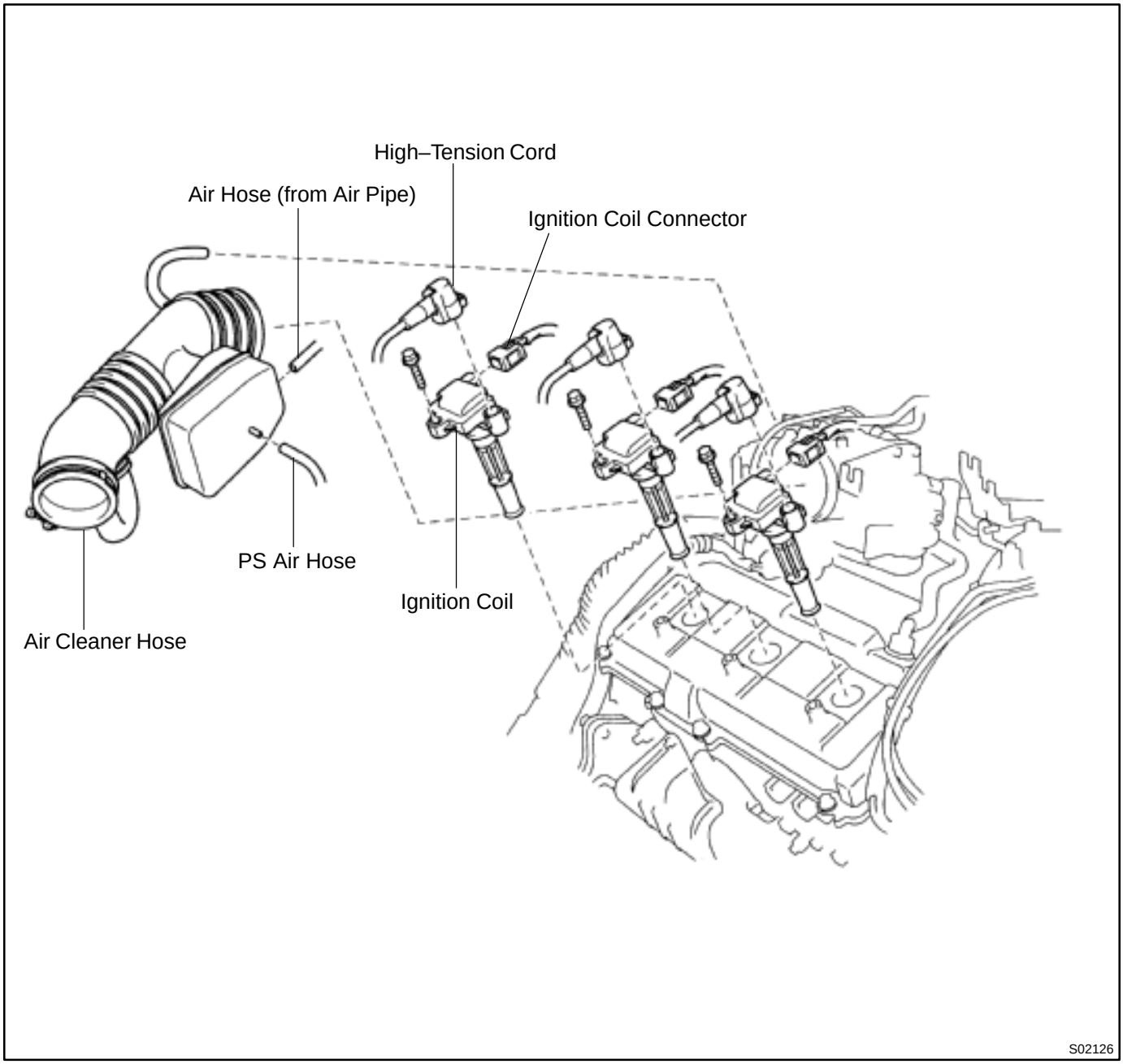

IG0FC–01

REPLACEMENT

1. REMOVE AIR CLEANER HOSE

2. DISCONNECT HIGH–TENSION CORDS FROM IGNITION COILS

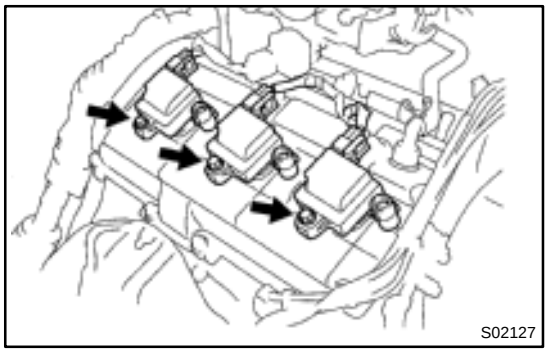

3. REMOVE IGNITION COILS

(a) Disconnect the connector from the ignition coil.

(b) Remove the bolt and ignition coil from the LH cylinder head.

4. REINSTALL NEW IGNITION COILS

(a) Connect a new ignition coil to the spark plug, and attach the ignition coil to the cylinder head cover.

(b) Install the ignition coil with the bolt.

Torque: 7.8 N·m (80 kgf·cm, 69 in.·lbf)

5. RECONNECT HIGH–TENSION CORDS TO IGNITION COILS

6. REINSTALL AIR CLEANER HOSE

IGNITION SYSTEM

IG0FB–01

ON–VEHICLE INSPECTION

NOTICE:

"Cold" and "Hot" in these sentences express the temperature of the coils themselves. "Cold" is from –10˚C (14˚F) to 50˚C (122˚F) and "Hot" is from 50˚C (122˚F) to 100˚C (212˚F).

1. INSPECT IGNITOR AND SPARK TEST

(a) Disconnect high–tension cords from spark plug.
(b) Remove the spark plug.
(c) Install the spark plug to each high–tension cord.
(d) Ground the spark plug.
(e) Check if spark occurs while engine is being cranked.

NOTICE:

To prevent excess fuel being injected from the injectors during this test, do not crank the engine for more 5 – 10 seconds at a time.

If the spark does not occur, do the test as follows:

SPARK TEST
↓ NO
CHECK CONNECTION OF IGNITION COIL AND IGNITER → BAD → Connect securely.
↓ OK
CHECK RESISTANCE OF HIGH–TENSION CORD (See step 2)
Maximum resistance: 25 kΩ per cord → BAD → Replace the cord(s).
↓ OK
CHECK POWER SUPPLY TO IGNITION COIL AND IGNITER
1. Turn ignition switch to ON.
2. Check that there is battery voltage at ignition coil positive (+) terminal. → BAD → Check wiring between ignition switch to ignition coil and igniter.
↓ OK
CHECK RESISTANSE OF IGNITION COIL (See step 4)

Resistance:	Cold	Hot
Primary	0.67 – 1.05 Ω	0.85 – 1.23 Ω
Secondary	9.3 – 16.0 Ω	11.7 – 18.8 Ω

→ BAD → Replace ignition coil.
↓ OK
CHECK RESISTANSE OF CAMSHAFT POSITION SENSOR (See step 5)

Resistance:	Cold	Hot
	835 – 1,400 W	1,060 – 1,645 Ω

→ BAD → Replace sensor.
↓ OK
CHECK RESISTANSE OF CRANKSHAFT POSITION SENSOR (See step 6)

Resistance:	Cold	Hot
	1,630 – 2,740 Ω	2,065 – 3,225 Ω

→ BAD → Replace sensor.
↓ OK
CHECK IGT SIGNAL FROM ECM (See page DI–254) → BAD → Check wiring between ECM, and igniter, and then try another ECM.
↓
TRY ANOTHER IGNITER

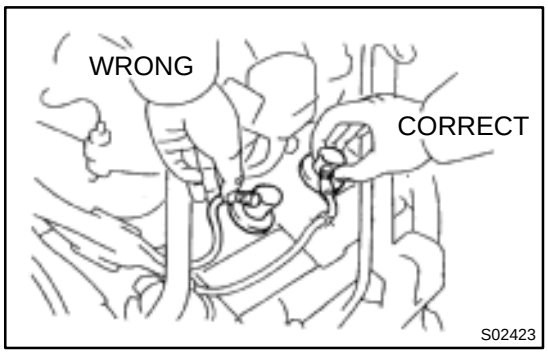

2. INSPECT HIGH–TENSION CORDS

(a) Remove the air cleaner hose.

(b) Disconnect the high–tension cords at the rubber boot. Do not pull on the high–tension cords.

NOTICE:

Pulling on or bending the cords may damage the conductor inside.

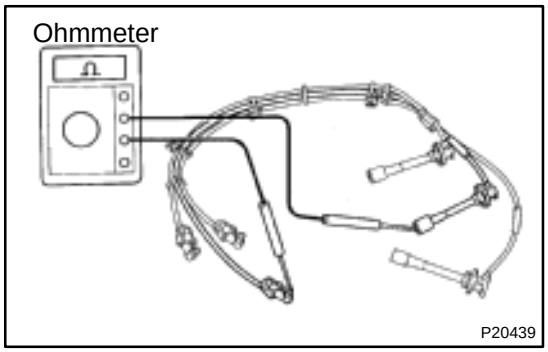

(c) Using an ohmmeter, measure the high–tension cord resistance.

Maximum resistance: 25 kΩ per cord

If the resistance is greater than maximum, check the terminals. If necessary, replace the high–tension cord.

(d) Reconnect and install the high–tension cords as shown in the illustration.

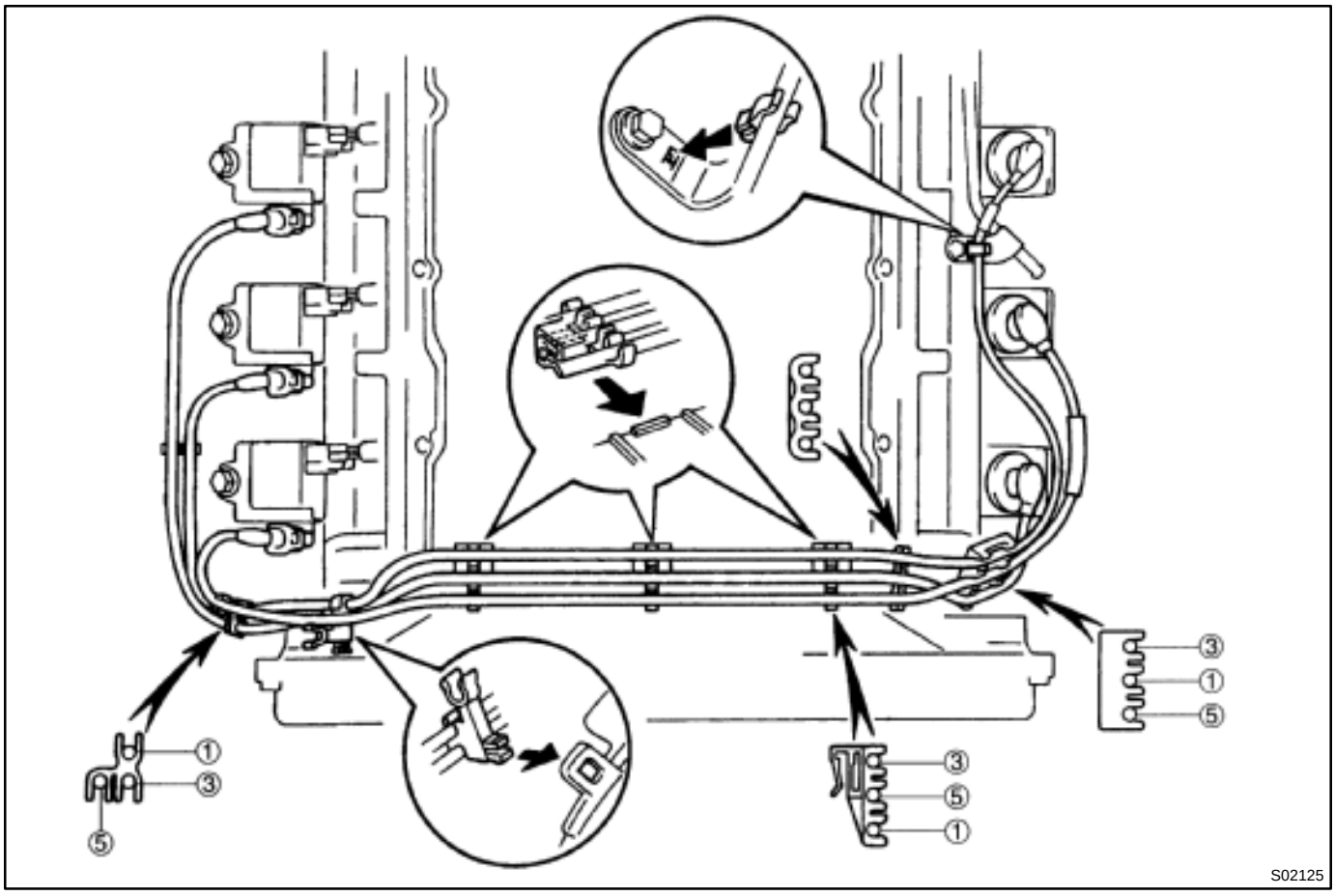

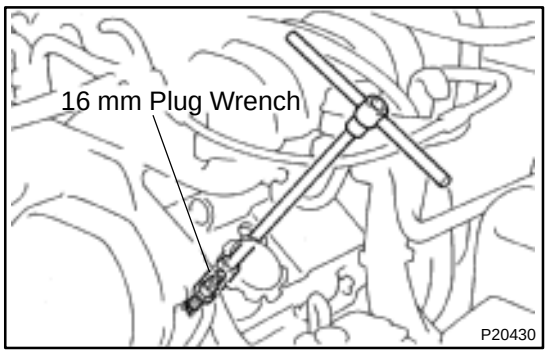

3. INSPECT SPARK PLUGS

(a) Disconnect the 3 high–tension cords.

(b) Remove the 3 ignition coils.

(c) Using a 16 mm plug wrench, remove the 6 spark plugs.

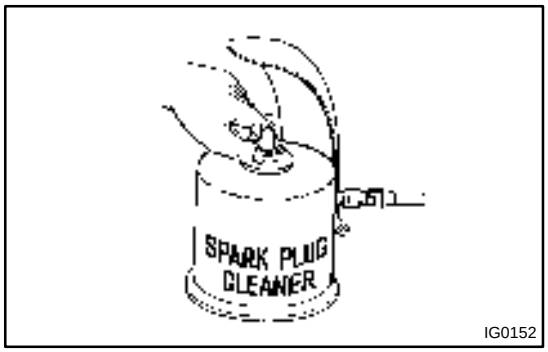

(d) Clean the spark plugs.

If the electrode has traces of wet carbon, allow it to dry and then clean with a spark plug cleaner.

Air pressure: Below 588 kPa (6 kgf/cm^2, 85 psi)

Duration: 20 seconds or less

HINT:

If there are traces of oil, remove it with gasoline before using the spark plug cleaner.

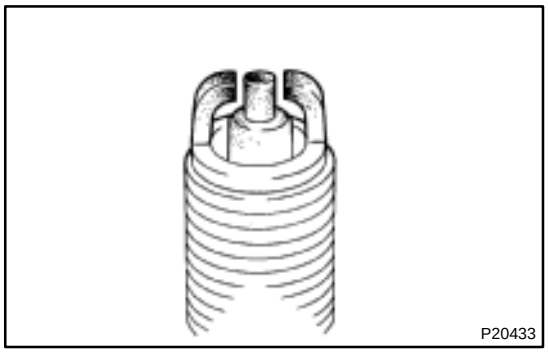

(e) Visually check the spark plug for thread damage and insulator damage.

If abnormal, replace the spark plug.

Recommended spark plug:

DENSO made	K16TR11
NGK made	BKR5EKB–11

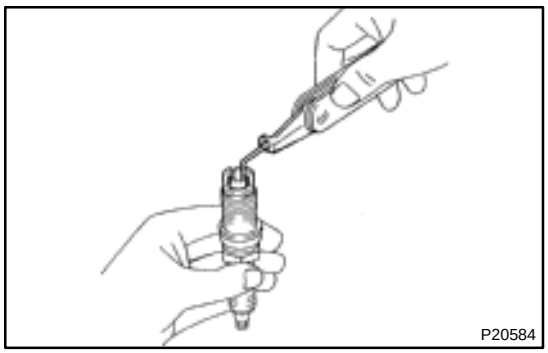

(f) Adjust the electrode gap.

Carefully bend the outer electrode to obtain the correct electrode gap.

Correct electrode gap: 1.1 mm (0.043 in.)

(g) Using a 16 mm plug wrench, reinstall the spark plugs.

Torque: 18 N·m (180 kgf·cm, 13 ft·lbf)

(h) Reinstall the 3 ignition coils.

(i) Reconnect the 3 high–tension cords.

4. INSPECT IGNITION COIL

(a) Remove the air cleaner hose.

(b) Disconnect the high–tension cords and ignition coil connectors from the ignition coils.

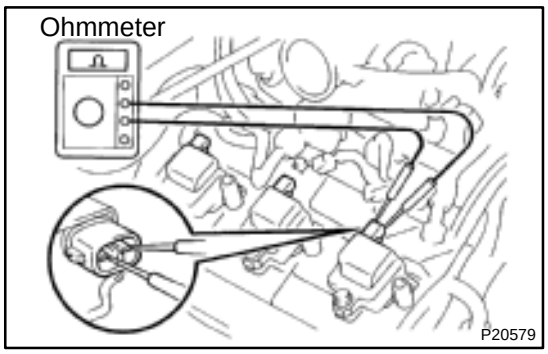

(c) Inspect the primary coil resistance.
Using an ohmmeter, measure the resistance between the positive (+) and negative (–) terminals.
Primary coil resistance:

Cold	0.67 – 1.05 Ω
Hot	0.85 – 1.23 Ω

If the resistance is not as specified, replace the ignition coil.
(d) Remove the ignition coils.

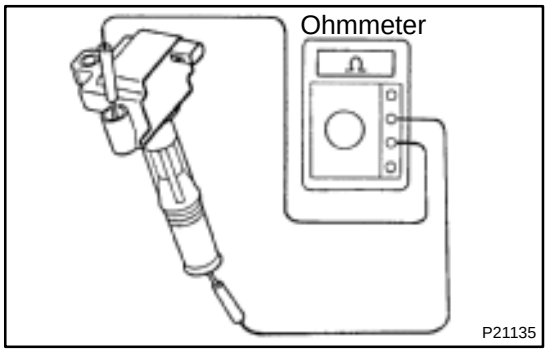

(e) Inspect the secondary coil resistance.
Using an ohmmeter, measure the resistance between the positive (+) and high–tension terminals.
Secondary coil resistance:

Cold	9.3 – 16.0 Ω
Hot	11.7 – 18.8 Ω

If the resistance is not as specified, replace the ignition coil.
(f) Reinstall the ignition coils.
(g) Reconnect the ignition coil connectors and the high–tension cords.
(h) Reinstall the air cleaner hose.

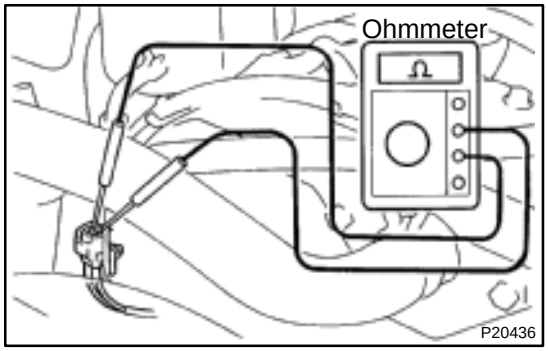

5. INSPECT CAMSHAFT POSITION SENSOR
(a) Disconnect the sensor connector.
(b) Using an ohmmeter, measure the resistance between the terminals.
Resistance:

Cold	835 – 1,400 Ω
Hot	1,060 – 1,645 Ω

If the resistance is not as specified, replace the sensor.
(See page IG–9)
(c) Reconnect the camshaft position sensor connector.

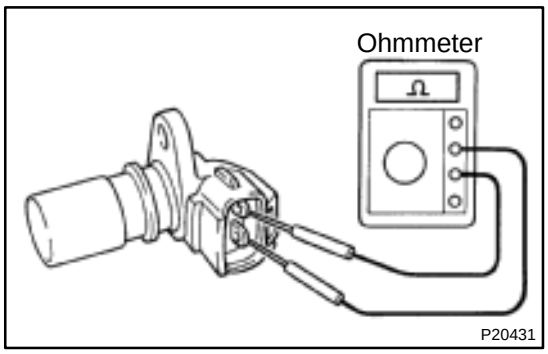

6. INSPECT CRANKSHAFT POSITION SENSOR

(a) Remove the sensor connector. (See page IG–10)

(b) Using an ohmmeter, measure the resistance between the terminals.

Resistance:

Cold	1,630 – 2,740 Ω
Hot	2,065 – 3,225 Ω

(c) Reinstall the sensor.

TERMS

IN01W–03

ABBREVIATIONS USED IN THIS MANUAL

Abbreviations	Meaning
ABS	Anti–Lock Brake System
AC	Alternating Current
ACC	Accessory
ACIS	Acoustic Control Induction System
ACSD	Automatic Cold Start Device
A.D.D.	Automatic Disconnecting Differential
A/F	Air–Fuel Ratio
AHC	Active Height Control Suspension
ALR	Automatic Locking Retractor
ALT	Alternator
AMP	Amplifier
ANT	Antenna
APPROX.	Approximately
A/T	Automatic Transmission (Transaxle)
ATF	Automatic Transmission Fluid
AUTO	Automatic
AUX	Auxiliary
AVG	Average
AVS	Adaptive Variable Suspension
BACS	Boost Altitude Compensation System
BAT	Battery
BDC	Bottom Dead Center
B/L	Bi–Level
B/S	Bore–Stroke Ratio
BTDC	Before Top Dead Center
BVSV	Bimetallic Vacuum Switching Valve
Calif.	California
CB	Circuit Breaker
CCo	Catalytic Converter For Oxidation
CD	Compact Disc
CF	Cornering Force
CG	Center Of Gravity
CH	Channel
COMB.	Combination
CPE	Coupe
CPS	Combustion Pressure Sensor
CPU	Central Processing Unit
CRS	Child Restraint System
CTR	Center
C/V	Check Valve
CV	Control Valve
CW	Curb Weight

DC	Direct Current
DEF	Defogger
DFL	Deflector
DIFF.	Differential
DIFF. LOCK	Differential Lock
D/INJ	Direct Injection
DLI	Distributorless Ignition
DOHC	Double Over Head Cam
DP	Dash Pot
DS	Dead Soak
DSP	Digital Signal Processor
ECAM	Engine Control And Measurement System
ECD	Electronic Controlled Diesel
ECDY	Eddy Current Dynamometer
ECU	Electronic Control Unit
ED	Electro–Deposited Coating
EDU	Electronic Driving Unit
EDIC	Electric Diesel Injection Control
EFI	Electronic Fuel Injection
E/G	Engine
EGR–VM	Egr–Vacuum Modulator
ELR	Emergency Locking Retractor
ENG	Engine
ESA	Electronic Spark Advance
ETCS	Electronic Throttle Control System
EVP	Evaporator
E–VRV	Electric Vacuum Regulating Valve
EXH	Exhaust
FE	Fuel Economy
FF	Front–Engine Front–Wheel–Drive
F/G	Fuel Gage
FIPG	Formed In Place Gasket
FL	Fusible Link
F/P	Fuel Pump
FPU	Fuel Pressure Up
Fr	Front
FR	Front–Engine Rear–Wheel–Drive
F/W	Flywheel
FW/D	Flywheel Damper
FWD	Front–Wheel–Drive
GAS	Gasoline
GND	Ground
HAC	High Altitude Compensator
H/B	Hatchback
H–FUSE	High Current Fuse
HI	High

HID	High Intensity Discharge (Head Lamp)
HSG	Housing
HT	Hard Top
HWS	Heated Windshield System
IAC	Idle Air Control
IC	Integrated circuit
IDI	Indirect Diesel Injection
IFS	Independent Front Suspension
IG	Ignition
IIA	Integrated Ignition Assembly
IN	Intake (Manifold, Valve)
INT	Intermittent
I/P	Instrument Panel
IRS	Independent Rear Suspension
J/B	Junction Block
J/C	Junction Connector
KD	Kick–Down
LAN	Local Area Network
LB	Liftback
LCD	Liquid Crystal Display
LED	Light Emitting Diode
LH	Left–Hand
LHD	Left–Hand Drive
L/H/W	Length, Height, Width
LLC	Long–Life Coolant
LNG	Liquified Natural Gas
LO	Low
LPG	Liquified Petroleum Gas
LSD	Limited Slip Differential
LSP & PV	Load Sensing Proportioning And Bypass Valve
LSPV	Load Sensing Proportioning Valve
MAX.	Maximum
MIC	Microphone
MIL	Malfunction Indicator Lamp
MIN.	Minimum
MP	Multipurpose
MPX	Multiplex Communication System
M/T	Manual Transmission
MT	Mount
MTG	Mounting
N	Neutral
NA	Natural Aspiration
No.	Number
O/D	Overdrive
OEM	Original Equipment Manufacturing
OHC	Overhead Camshaft

OHV	Overhead Valve
OPT	Option
O/S	Oversize
P & BV	Proportioning And Bypass Valve
PCS	Power Control System
PCV	Positive Crankcase Ventilation
PKB	Parking Brake
PPS	Progressive Power Steering
PS	Power Steering
PTO	Power Take–Off
R & P	Rack And Pinion
R/B	Relay Block
RBS	Recirculating Ball Type Steering
R/F	Reinforcement
RFS	Rigid Front Suspension
RRS	Rigid Rear Suspension
RH	Right–Hand
RHD	Right–Hand Drive
RLY	Relay
ROM	Read Only Memory
Rr	Rear
RR	Rear–Engine Rear–Wheel Drive
RWD	Rear–Wheel Drive
SDN	Sedan
SEN	Sensor
SICS	Starting Injection Control System
SOC	State Of Charge
SOHC	Single Overhead Camshaft
SPEC	Specification
SPI	Single Point Injection
SRS	Supplemental Restraint System
SSM	Special Service Materials
SST	Special Service Tools
STD	Standard
STJ	Cold–Start Fuel Injection
SW	Switch
SYS	System
T/A	Transaxle
TACH	Tachometer
TBI	Throttle Body Electronic Fuel Injection
TC	Turbocharger
TCCS	TOYOTA Computer–Controlled System
TCV	Timing Control Valve
TDC	Top Dead Center
TEMP.	Temperature
TEMS	TOYOTA Electronic Modulated Suspension

TIS	Total Information System For Vehicle Development
T/M	Transmission
TMC	TOYOTA Motor Corporation
TMMK	TOYOTA Motor Manufacturing Kentucky, Inc.
TRAC	Traction Control System
TURBO	Turbocharge
U/D	Underdrive
U/S	Undersize
VCV	Vacuum Control Valve
VENT	Ventilator
VIN	Vehicle Identification Number
VPS	Variable Power Steering
VSC	Vehicle Skid Control Vehicle Stability Control
VSV	Vacuum Switching Valve
VTV	Vacuum Transmitting Valve
w/	With
WGN	Wagon
W/H	Wire Harness
w/o	Without
1st	First
2nd	Second
2WD	Two Wheel Drive Vehicle (4x2)
4WD	Four Wheel Drive Vehicle (4x4)

HOW TO USE THIS MANUAL

IN01O–05

GENERAL INFORMATION

1. INDEX

An INDEX is provided on the first page of each section to guide you to the item to be repaired. To assist you in finding your way through the manual, the Section Title and major heading are given at the top of every page.

2. PRECAUTION

At the beginning of each section, a PRECAUTION is given that pertains to all repair operations contained in that section.
Read these precautions before starting any repair task.

3. TROUBLESHOOTING

TROUBLESHOOTING tables are included for each system to help you diagnose the problem and find the cause. The fundamentals of how to proceed with troubleshooting are described on page IN–18.
Be sure to read this before performing troubleshooting.

4. PREPARATION

Preparation lists the SST (Special Service Tools), recommended tools, equipment, lubricant and SSM (Special Service Materials) which should be prepared before beginning the operation and explains the purpose of each one.

5. REPAIR PROCEDURES

Most repair operations begin with an overview illustration. It identifies the components and shows how the parts fit together.
Example:

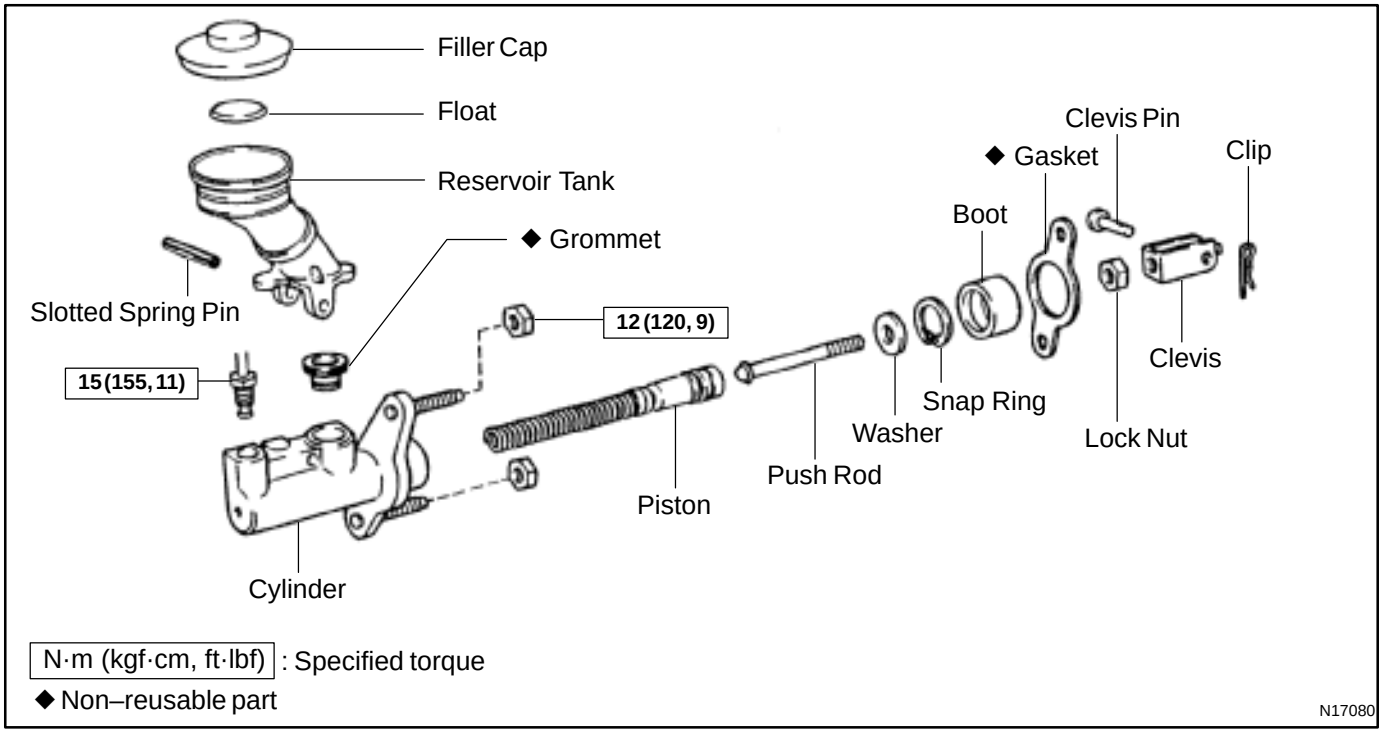

The procedures are presented in a step–by–step format:

- The illustration shows what to do and where to do it.
- The task heading tells what to do.
- The detailed text tells how to perform the task and gives other information such as specifications and warnings.

Example:

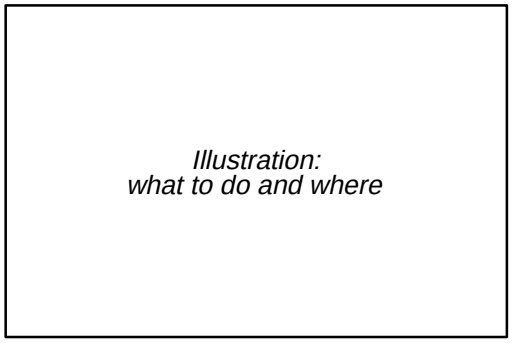

Task heading : what to do

21. CHECK PISTON STROKE OF OVERDRIVE BRAKE

(a) Place SST and a dial indicator onto the overdrive brake piston as shown in the illustration.

SST 09350–30020 (09350–06120)

Set part No. *Component part No.*

Detailed text : how to do task

(b) Measure the stroke applying and releasing the compressed air (392 — 785 kPa, 4 — 8 kgf/cm^2 or 57 — 114 psi) as shown in the illustration.

Piston stroke: 1.40 — 1.70 mm (0.0551 — 0.0669 in.)

Specification

This format provides the experienced technician with a FAST TRACK to the information needed. The upper case task heading can be read at a glance when necessary, and the text below it provides detailed information. Important specifications and warnings always stand out in bold type.

6. REFERENCES

References have been kept to a minimum. However, when they are required you are given the page to refer to.

7. SPECIFICATIONS

Specifications are presented in bold type throughout the text where needed. You never have to leave the procedure to look up your specifications. They are also found in Service Specifications section for quick reference.

8. CAUTIONS, NOTICES, HINTS:

- CAUTIONS are presented in bold type, and indicate there is a possibility of injury to you or other people.
- NOTICES are also presented in bold type, and indicate the possibility of damage to the components being repaired.
- HINTS are separated from the text but do not appear in bold. They provide additional information to help you perform the repair efficiently.

9. SI UNIT

The UNITS given in this manual are primarily expressed according to the SI UNIT (International System of Unit), and alternately expressed in the metric system and in the English System.

Example:

Torque: 30 N·m (310 kgf·cm, 22 ft·lbf)

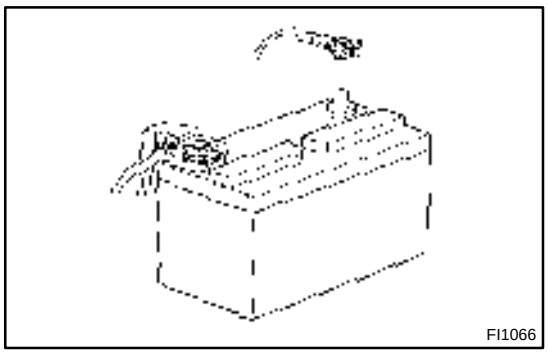
FI1066

REPAIR INSTRUCTIONS

GENERAL INFORMATION

IN0D9–01

BASIC REPAIR HINT

(a) Use fender, seat and floor covers to keep the vehicle clean and prevent damage.

(b) During disassembly, keep parts in the appropriate order to facilitate reassembly.

(c) Installation and removal of battery terminal:
  (1) Before performing electrical work, disconnect the negative (–) terminal cable from the battery.
  (2) If it is necessary to disconnect the battery for inspection or repair, first disconnect the negative (–) terminal cable.
  (3) When disconnecting the terminal cable, to prevent damage to battery terminal, loosen the cable nut and raise the cable straight up without twisting or prying it.
  (4) Clean the battery terminals and cable ends with a clean shop rag. Do not scrape them with a file or other abrasive objects.
  (5) Install the cable ends to the battery terminals after loosening the nut and tighten the nut after installation. Do not use a hammer to tap the cable ends onto the terminals.
  (6) Be sure the cover for the positive (+) terminal is properly in place.

(d) Check hose and wiring connectors to make sure that they are connected securely and correctly.

(e) Non–reusable parts
  (1) Always replace cotter pins, gaskets, O–rings, oil seals, etc. with new ones.
  (2) Non–reusable parts are indicated in the component illustrations by the "◆" symbol.

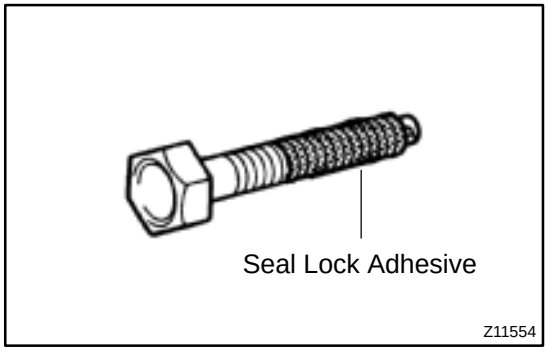

Z11554

(f) Precoated parts
Precoated parts are bolts, nuts, etc. that are coated with a seal lock adhesive at the factory.
  (1) If a precoated part is retightened, loosened or caused to move in any way, it must be recoated with the specified adhesive.
  (2) When reusing precoated parts, clean off the old adhesive and dry with compressed air. Then apply the specified seal lock adhesive to the bolt, nut or threads.

(3) Precoated parts are indicated in the component illustrations by the "★" symbol.

(g) When necessary, use a sealer on gaskets to prevent leaks.

(h) Carefully observe all specifications for bolt tightening torques. Always use a torque wrench.

(i) Use of special service tools (SST) and special service materials (SSM) may be required, depending on the nature of the repair. Be sure to use SST and SSM where specified and follow the proper work procedure. A list of SST and SSM can be found in the Preparation section in this manual.

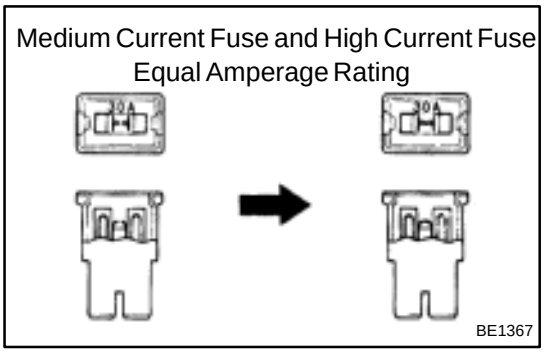

(j) When replacing fuses, be sure the new fuse has the correct amperage rating. DO NOT exceed the rating or use one with a lower rating.

Illustration	Symbol	Part Name	Abbreviation
 BE5594	 IN0365	FUSE	FUSE
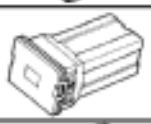 BE5595	 IN0366	MEDIUM CURRENT FUSE	M–FUSE
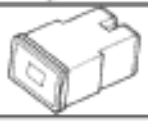 BE5596	 IN0367	HIGH CURRENT FUSE	H–FUSE
 BE5597	 IN0367	FUSIBLE LINK	FL
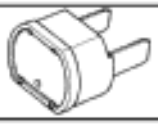 BE5598	 IN0368	CIRCUIT BREAKER	CB

V00076

(k) Care must be taken when jacking up and supporting the vehicle. Be sure to lift and support the vehicle at the proper locations (See page IN–8).
- Cancel the parking brake on the level place and shift the transmission in Neutral (or N position).
- When jacking up the front wheels of the vehicle at first place stoppers behind the rear wheels.
- When jacking up the rear wheels of the vehicle at first place stoppers before the front wheels.
- When either the front or rear wheels only should be jacked up, set rigid racks and place stoppers in front and behind the other wheels on the ground.
- After the vehicle is jacked up, be sure to support it on rigid racks. It is extremely dangerous to do any work on a vehicle raised on a jack alone, even for a small job that can be finished quickly.

(l) Observe the following precautions to avoid damage to the following parts:

(1) Do not open the cover or case of the ECU unless absolutely necessary. (If the IC terminals are touched, the IC may be destroyed by static electricity.)

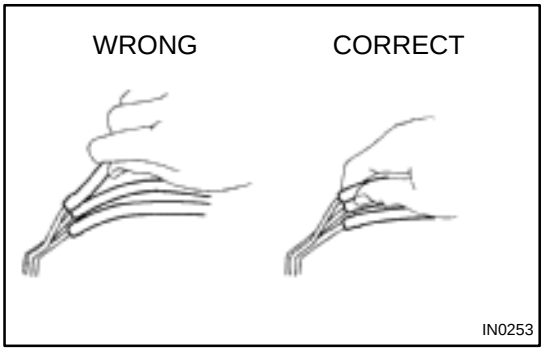

(2) To disconnect vacuum hoses, pull off the end, not the middle of the hose.

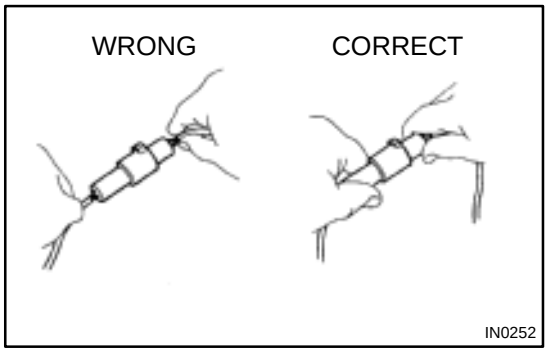

(3) To pull apart electrical connectors, pull on the connector itself, not the wires.

(4) Be careful not to drop electrical components, such as sensors or relays. If they are dropped on a hard floor, they should be replaced and not reused.

(5) When steam cleaning an engine, protect the electronic components, air filter and emission–related components from water.

(6) Never use an impact wrench to remove or install temperature switches or temperature sensors.

(7) When checking continuity at the wire connector, insert the tester probe carefully to prevent terminals from bending.

(8) When using a vacuum gauge, never force the hose onto a connector that is too large. Use a step–down adapter for adjustment. Once the hose has been stretched, it may leak air.

Example

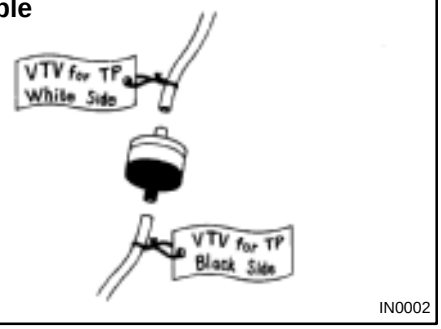

(m) Installation and removal of vacuum hose:

(1) When disconnecting vacuum hoses, use tags to identify where they should be reconnected to.

(2) After completing a job, double check that the vacuum hoses are properly connected. A label under the hood shows the proper layout.

(n) Unless otherwise stated, all resistance is measured at an ambient temperature of 20˚C (68˚F). Because the resistance may be outside specifications if measured at high temperatures immediately after the vehicle has been running, measurement should be made when the engine has cooled down.

IN01X–02

GLOSSARY OF SAE AND TOYOTA TERMS

This glossary lists all SAE–J1930 terms and abbreviations used in this manual in compliance with SAE recommendations, as well as their Toyota equivalents.

SAE ABBREVIATIONS	SAE TERMS	TOYOTA TERMS ( )—ABBREVIATIONS
A/C	Air Conditioning	Air Conditioner
ACL	Air Cleaner	Air Cleaner
AIR	Secondary Air Injection	Air Injection (AI)
AP	Accelerator Pedal	–
B+	Battery Positive Voltage	+B, Battery Voltage
BARO	Barometric Pressure	–
CAC	Charge Air Cooler	Intercooler
CARB	Carburetor	Carburetor
CFI	Continuous Fuel Injection	–
CKP	Crankshaft Position	Crank Angle
CL	Closed Loop	Closed Loop
CMP	Camshaft Position	Cam Angle
CPP	Clutch Pedal Position	–
CTOX	Continuous Trap Oxidizer	–
CTP	Closed Throttle Position	–
DFI	Direct Fuel Injection (Diesel)	Direct Injection (DI)
DI	Distributor Ignition	–
DLC1 DLC2 DLC3	Data Link Connector 1 Data Link Connector 2 Data Link Connector 3	1: Check Connector 2: Total Diagnosis Comunication Link (TDCL) 3: OBD II Diagnostic Connector
DTC	Diagnostic Trouble Code	Diagnostic Code
DTM	Diagnostic Test Mode	–
ECL	Engine Control Level	–
ECM	Engine Control Module	Engine ECU (Electronic Control Unit)
ECT	Engine Coolant Temperature	Coolant Temperature, Water Temperature (THW)
EEPROM	Electrically Erasable Programmable Read Only Memory	Electrically Erasable Programmable Read Only Memory (EEPROM), Erasable Programmable Read Only Memory (EPROM)
EFE	Early Fuel Evaporation	Cold Mixture Heater (CMH), Heat Control Valve (HCV)
EGR	Exhaust Gas Recirculation	Exhaust Gas Recirculation (EGR)
EI	Electronic Ignition	Distributorless Ignition (DI)
EM	Engine Modification	Engine Modification (EM)
EPROM	Erasable Programmable Read Only Memory	Programmable Read Only Memory (PROM)
EVAP	Evaporative Emission	Evaporative Emission Control (EVAP)
FC	Fan Control	–
FEEPROM	Flash Electrically Erasable Programmable Read Only Memory	–
FEPROM	Flash Erasable Programmable Read Only Memory	–
FF	Flexible Fuel	–
FP	Fuel Pump	Fuel Pump
GEN	Generator	Alternator
GND	Ground	Ground (GND)

HO2S	Heated Oxygen Sensor	Heated Oxygen Sensor (HO2S)
IAC	Idle Air Control	Idle Speed Control (ISC)
IAT	Intake Air Temperature	Intake or Inlet Air Temperature
ICM	Ignition Control Module	–
IFI	Indirect Fuel Injection	Indirect Injection
IFS	Inertia Fuel–Shutoff	–
ISC	Idle Speed Control	–
KS	Knock Sensor	Knock Sensor
MAF	Mass Air Flow	Air Flow Meter
MAP	Manifold Absolute Pressure	Manifold Pressure Intake Vacuum
MC	Mixture Control	Electric Bleed Air Control Valve (EBCV) Mixture Control Valve (MCV) Electric Air Control Valve (EACV)
MDP	Manifold Differential Pressure	–
MFI	Multiport Fuel Injection	Electronic Fuel Injection (EFI)
MIL	Malfunction Indicator Lamp	Check Engine Light
MST	Manifold Surface Temperature	–
MVZ	Manifold Vacuum Zone	–
NVRAM	Non–Volatile Random Access Memory	–
O2S	Oxygen Sensor	Oxygen Sensor, O_2 Sensor (O_2S)
OBD	On–Board Diagnostic	On–Board Diagnostic (OBD)
OC	Oxidation Catalytic Converter	Oxidation Catalyst Converter (OC), CCo
OP	Open Loop	Open Loop
PAIR	Pulsed Secondary Air Injection	Air Suction (AS)
PCM	Powertrain Control Module	–
PNP	Park/Neutral Position	–
PROM	Programmable Read Only Memory	–
PSP	Power Steering Pressure	–
PTOX	Periodic Trap Oxidizer	Diesel Particulate Filter (DPF) Diesel Particulate Trap (DPT)
RAM	Random Access Memory	Random Access Memory (RAM)
RM	Relay Module	–
ROM	Read Only Memory	Read Only Memory (ROM)
RPM	Engine Speed	Engine Speed
SC	Supercharger	Supercharger
SCB	Supercharger Bypass	–
SFI	Sequential Multiport Fuel Injection	Electronic Fuel Injection (EFI), Sequential Injection
SPL	Smoke Puff Limiter	–
SRI	Service Reminder Indicator	–
SRT	System Readiness Test	–
ST	Scan Tool	–
TB	Throttle Body	Throttle Body
TBI	Throttle Body Fuel Injection	Single Point Injection Central Fuel Injection (Ci)
TC	Turbocharger	Turbocharger
TCC	Torque Converter Clutch	Torque Converter

TCM	Transmission Control Module	Transmission ECU (Electronic Control Unit)
TP	Throttle Position	Throttle Position
TR	Transmission Range	–
TVV	Thermal Vacuum Valve	Bimetallic Vacuum Switching Valve (BVSV) Thermostatic Vacuum Switching Valve (TVSV)
TWC	Three–Way Catalytic Converter	Three–Way Catalytic (TWC) CC_{RO}
TWC+OC	Three–Way + Oxidation Catalytic Converter	CC_R + CCo
VAF	Volume Air Flow	Air Flow Meter
VR	Voltage Regulator	Voltage Regulator
VSS	Vehicle Speed Sensor	Vehicle Speed Sensor (Read Switch Type)
WOT	Wide Open Throttle	Full Throttle
WU–OC	Warm Up Oxidation Catalytic Converter	–
WU–TWC	Warm Up Three–Way Catalytic Converter	Manifold Converter
3GR	Third Gear	–
4GR	Fourth Gear	–

IN01U–04

HOW TO PROCEED WITH TROUBLESHOOTING

Carry out troubleshooting in accordance with the procedure on the following page. Here, only the basic procedure is shown. Details are provided in Diagnostics section, showing the most effective methods for each circuit. Confirm the troubleshooting procedures first for the relevant circuit before beginning troubleshooting of that circuit.

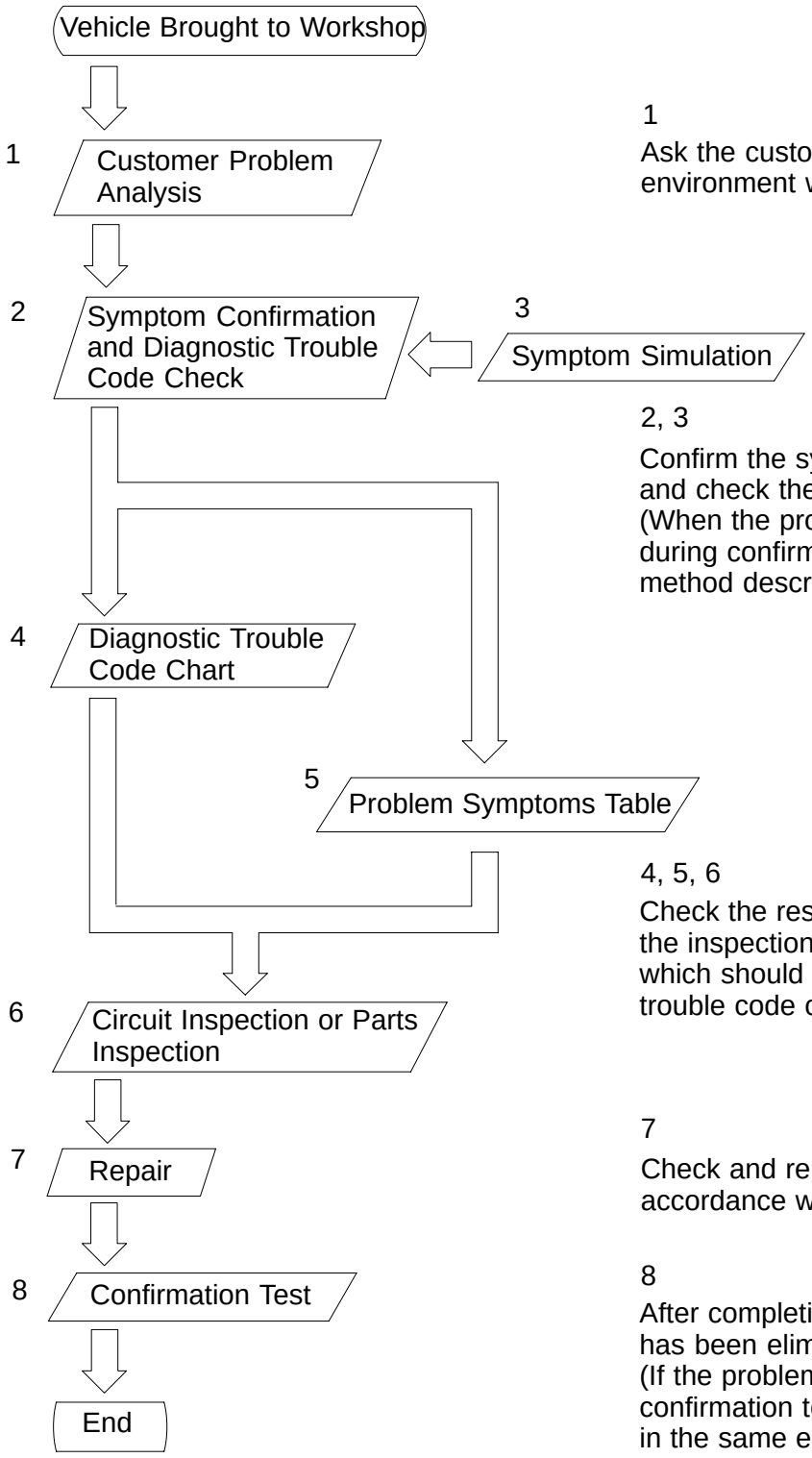

1

Ask the customer about the conditions and the environment when the problem occurred.

2, 3

Confirm the symptoms and the problem conditions, and check the diagnostic trouble codes.
(When the problem symptoms do not appear during confirmation, use the symptom simulation method described later on.)

4, 5, 6

Check the results obtained in Step 2, then confirm the inspection procedure for the system or the part which should be checked using the diagnostic trouble code chart or the problem symptoms table.

7

Check and repair the affected system or part in accordance with the instructions in Step 6.

8

After completing repairs, confirm that the problem has been eliminated.
(If the problem is not reproduced, perform the confirmation test under the same conditions and in the same environment as when it occurred for the first time.)

1. CUSTOMER PROBLEM ANALYSIS

In troubleshooting, the problem symptoms must be confirmed accurately and all preconceptions must be cleared away in order to give an accurate judgment. To ascertain just what the problem symptoms are, it is extremely important to ask the customer about the problem and the conditions at the time it occurred.

Important Point in the Problem Analysis:

The following 5 items are important points in the problem analysis. Past problems which are thought to be unrelated and the repair history, etc. may also help in some cases, so as much information as possible should be gathered and its relationship with the problem symptoms should be correctly ascertained for reference in troubleshooting. A customer problem analysis table is provided in Diagnostics section for each system for your use.

Important Points in the Customer Problem Analysis

- What ——— Vehicle model, system name
- When ——— Date, time, occurrence frequency
- Where ——— Road conditions
- Under what conditions? ——— Running conditions, driving conditions, weather conditions
- How did it happen? ——— Problem symptoms

(Sample) Engine control system check sheet.

CUSTOMER PROBLEM ANALYSIS CHECK

ENGINE CONTROL SYSTEM Check Sheet

Inspector's Name _____

Customer's Name		**Model and Model Year**	
Driver's Name		**Frame No.**	
Data Vehicle Brought in		**Engine Model**	
License No.		**Odometer Reading**	km miles

Problem Symptoms	☐ **Engine does not Start**	☐ **Engine does not crank** ☐ **No initial combustion** ☐ **No complete combustion**
	☐ **Difficult to Start**	☐ **Engine cranks slowly** ☐ **Other** _____
	☐ **Poor Idling**	☐ **Incorrect first idle** ☐ **Idling rpm is abnormal** ☐ **High (rpm)** ☐ **Low (rpm)** ☐ **Rough idling** ☐ **Other** _____
	☐ **Poor Drive ability**	☐ **Hesitation** ☐ **Back fire** ☐ **Muffler explosion (after–fire)** ☐ **Surging** ☐ **Knocking** ☐ **Other** _____
	☐ **Engine Stall**	☐ **Soon after starting** ☐ **After accelerator pedal depressed** ☐ **After accelerator pedal released** ☐ **During A/C operation** ☐ **Shifting from N to D** ☐ **Other** _____
	☐ **Others**	

☐ **Constant** ☐ **Sometimes (times per day/month)**

2. SYMPTOM CONFIRMATION AND DIAGNOSTIC TROUBLE CODE CHECK

The diagnostic system in the TOYOTA TACOMA fulfills various functions. The first function is the Diagnostic Trouble Code Check in which a malfunction in the signal circuits to the ECU is stored in code in the ECU memory at the time of occurrence, to be output by the technician during troubleshooting. Another function is the Input Signal Check which checks if the signals from various switches are sent to the ECU correctly. By using these check functions, the problem areas can be narrowed down quickly and troubleshooting can be performed effectively. Diagnostic functions are incorporated in the following systems in the TOYOTA TACOMA.

System	Diagnostic Trouble Code Check	Input Signal Check (Sensor Check)	Diagnostic Test Mode (Active Test)
Engine	○ (with Check Mode)	○	○
Automatic Transmission	○ (with Check Mode)	○	
Anti–Lock Brake System	○	○	
Supplemental Restraint System	○		
Cruise Control System (DENSO MADE)	○	○	
Cruise Control System (FORD MADE)	○	○	

In diagnostic trouble code check, it is very important to determine whether the problem indicated by the diagnostic trouble code is still occurring or occurred in the past but returned to normal at present. In addition, it must be checked in the problem symptom check whether the malfunction indicated by the diagnostic trouble code is directly related to the problem symptom or not. For this reason, the diagnostic trouble codes should be checked before and after the symptom confirmation to determine the current conditions, as shown in the table below. If this is not done, it may, depending on the case, result in unnecessary troubleshooting for normally operating systems, thus making it more difficult to locate the problem, or in repairs not pertinent to the problem. Therefore, always follow the procedure in correct order and perform the diagnostic trouble code check.

DIAGNOSTIC TROUBLE CODE CHECK PROCEDURE

Diagnostic Trouble Code Check (Make a note of and then clear)	**Confirmation of Symptoms**	**Diagnostic Trouble Code Check**	**Problem Condition**
Diagnostic Trouble Code Display	Problem symptoms exist	Same diagnostic trouble code is displayed	Problem is still occurring in the diagnostic circuit
⇨		Normal code is displayed	The problem is still occurring in a place other than in the diagnostic circuit (The diagnostic trouble code displayed first is either for a past problem or it is a secondary problem)
⇨	No problem symptoms exist		The problem occurred in the diagnostic circuit in the past
Normal Code Display ⇨	Problem symptoms exist	Normal code is displayed	The problem is still occurring in a place other than in the diagnostic circuit
⇨	No problem symptoms exist	Normal code is displayed	The problem occurred in a place other than in the diagnostic circuit in the past

Taking into account the above points, a flow chart showing how to proceed with troubleshooting using the diagnostic trouble code check is shown below. This flow chart shows how to utilize the diagnostic trouble code check effectively, then by carefully checking the results, indicates how to proceed either to diagnostic trouble code troubleshooting or to troubleshooting of problem symptoms table.

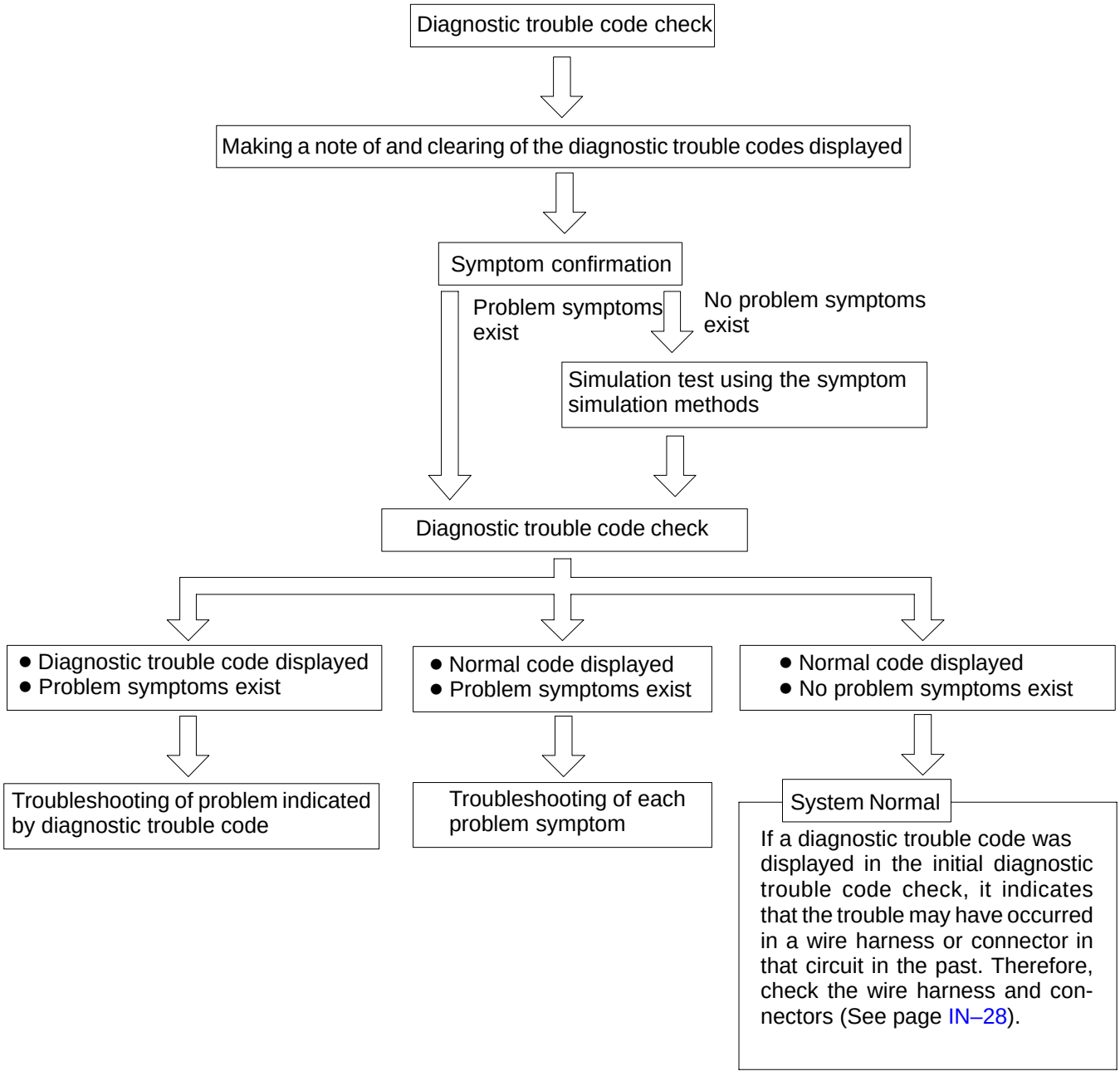

3. SYMPTOM SIMULATION

The most difficult case in troubleshooting is when there are no problem symptoms occurring. In such cases, a thorough customer problem analysis must be carried out, then simulate the same or similar conditions and environment in which the problem occurred in the customer's vehicle. No matter how much experience a technician has, or how skilled he may be, if he proceeds to troubleshoot without confirming the problem symptoms he will tend to overlook something important in the repair operation and make a wrong guess somewhere, which will only lead to a standstill. For example, for a problem which only occurs when the engine is cold, or for a problem which occurs due to vibration caused by the road during driving, etc., the problem can never be determined so long as the symptoms are confirmed with the engine hot condition or the vehicle at a standstill. Since vibration, heat or water penetration (moisture) is likely cause for problem which is difficult to reproduce, the symptom simulation tests introduced here are effective measures in that the external causes are applied to the vehicle in a stopped condition.

Important Points in the Symptom Simulation Test:

In the symptom simulation test, the problem symptoms should of course be confirmed, but the problem area or parts must also be found out. To do this, narrow down the possible problem circuits according to the symptoms before starting this test and connect a tester beforehand. After that, carry out the symptom simulation test, judging whether the circuit being tested is defective or normal and also confirming the problem symptoms at the same time. Refer to the problem symptoms table for each system to narrow down the possible causes of the symptom.

1	**VIBRATION METHOD: When vibration seems to be the major cause.**
CONNECTORS Slightly shake the connector vertically and horizontally. **WIRE HARNESS** Slightly shake the wire harness vertically and horizontally. The connector joint, fulcrum of the vibration, and body through portion are the major areas to be checked thoroughly.	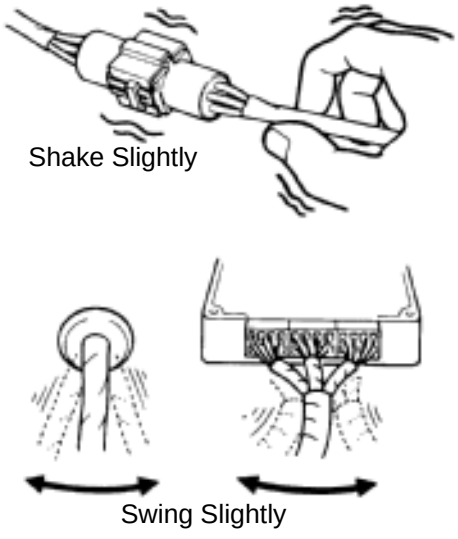
PARTS AND SENSOR Apply slight vibration with a finger to the part of the sensor considered to be the problem cause and check that the malfunction occurs. HINT: Applying strong vibration to relays may result in open relays.	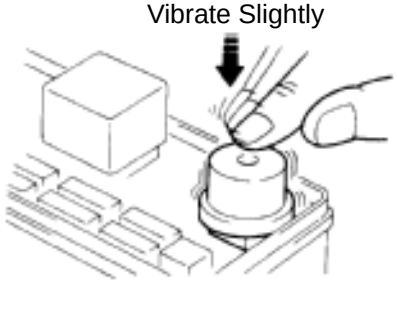

V07268

2	**HEAT METHOD: When the problem seems to occur when the suspect area is heated.**

Heat the component that is the likely cause of the malfunction with a hair dryer or similar object. Check to see if the malfunction occurs.

NOTICE:

(1) Do not heat to more than 60 ˚C (140 ˚F). (Temperature is limited not to damage the components.)

(2) Do not apply heat directly to parts in the ECU.

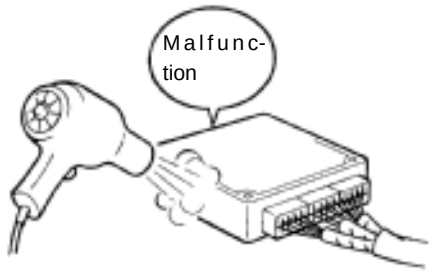

FI2334

3	**WATER SPRINKLING METHOD: When the malfunction seems to occur on a rainy day or in a high–humidity condition.**

Sprinkle water onto the vehicle and check to see if the malfunction occurs.

NOTICE:

(1) Never sprinkle water directly into the engine compartment, but indirectly change the temperature and humidity by applying water spray onto the radiator front surface.

(2) Never apply water directly onto the electronic components.

HINT:

If a vehicle is subject to water leakage, the leaked water may contaminate the ECU. When testing a vehicle with a water leakage problem, special caution must be taken.



FI6649

4	**OTHER: When a malfunction seems to occur when electrical load is excessive.**

Turn on all electrical loads including the heater blower, head lights, rear window defogger, etc. and check to see if the malfunction occurs.

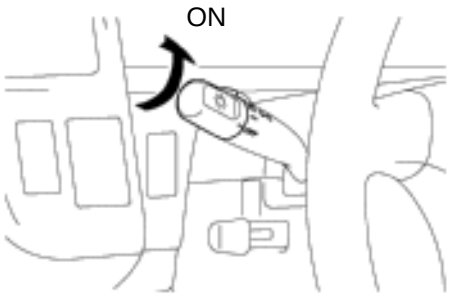

B02389

B02390

4. DIAGNOSTIC TROUBLE CODE CHART

The inspection procedure is shown in the table below. This table permits efficient and accurate troubleshooting using the diagnostic trouble codes displayed in the diagnostic trouble code check. Proceed with troubleshooting in accordance with the inspection procedure given in the diagnostic chart corresponding to the diagnostic trouble codes displayed. The engine diagnostic trouble code chart is shown below as an example.

- DTC No.
  Indicates the diagnostic trouble code.
- Page or Instructions
  Indicates the page where the inspection procedure for each circuit is to be found, or gives instructions for checking and repairs.

- Trouble Area
  Indicates the suspect area of the problem.

- Detection Item
  Indicates the system of the problem or contents of the problem.

DTC CHART (SAE Controlled)

HINT:
Parameters listed in the chart may not be exactly the same as your reading due to the type of instrument or other factors.

If a malfunction code is displayed during the DTC check mode, check the circuit for that code listed in the table below. For details of each code, turn to the page referred to under the "See page" for the respective "DTC No." in the DTC chart.

DTC No. (See page)	Detection Item	Trouble Area	MIL*	Memory
P0100 (DI–24)	Mass Air Flow Circuit Malfunction	● Open or short in mass air flow meter circuit ● Mass air flow meter ● ECM	○	○
P0101 (DI–28)	Mass Air Flow Circuit Range/ Performance Problem	● Mass air flow meter	○	○
P0110 (DI–29)	Intake Air Temp. Circuit Malfunction	● Open or short in intake air temp. sensor circuit ● Intake air temp. sensor ● ECM	○	○
P0115 (DI–33)	Engine Coolant Temp. Circuit Malfunction	● Open or short in engine coolant temp. sensor circuit ● Engine coolant temp. sensor ● ECM	○	○
P0116 (DI–37)	Engine Coolant Temp. Circuit Range/ Performance Problem	● Engine coolant temp. sensor ● Cooling system	○	○
	/Pedal Position Sensor/Switch nction	● Open or short in throttle position sensor circuit ● Throttle position sensor ● ECM		
	sition Sensor/ Switch rformance Prob-	● Throttle position sensor		

5. PROBLEM SYMPTOMS TABLE

The suspected circuits or parts for each problem symptom are shown in the table below. Use this table to troubleshoot the problem when a ”Normal” code is displayed in the diagnostic trouble code check but the problem is still occurring. Numbers in the table indicate the inspection order in which the circuits or parts should be checked.

HINT:

When the problem is not detected by the diagnostic system even though the problem symptom is present, it is considered that the problem is occurring outside the detection range of the diagnostic system, or that the problem is occurring in a system other than the diagnostic system.

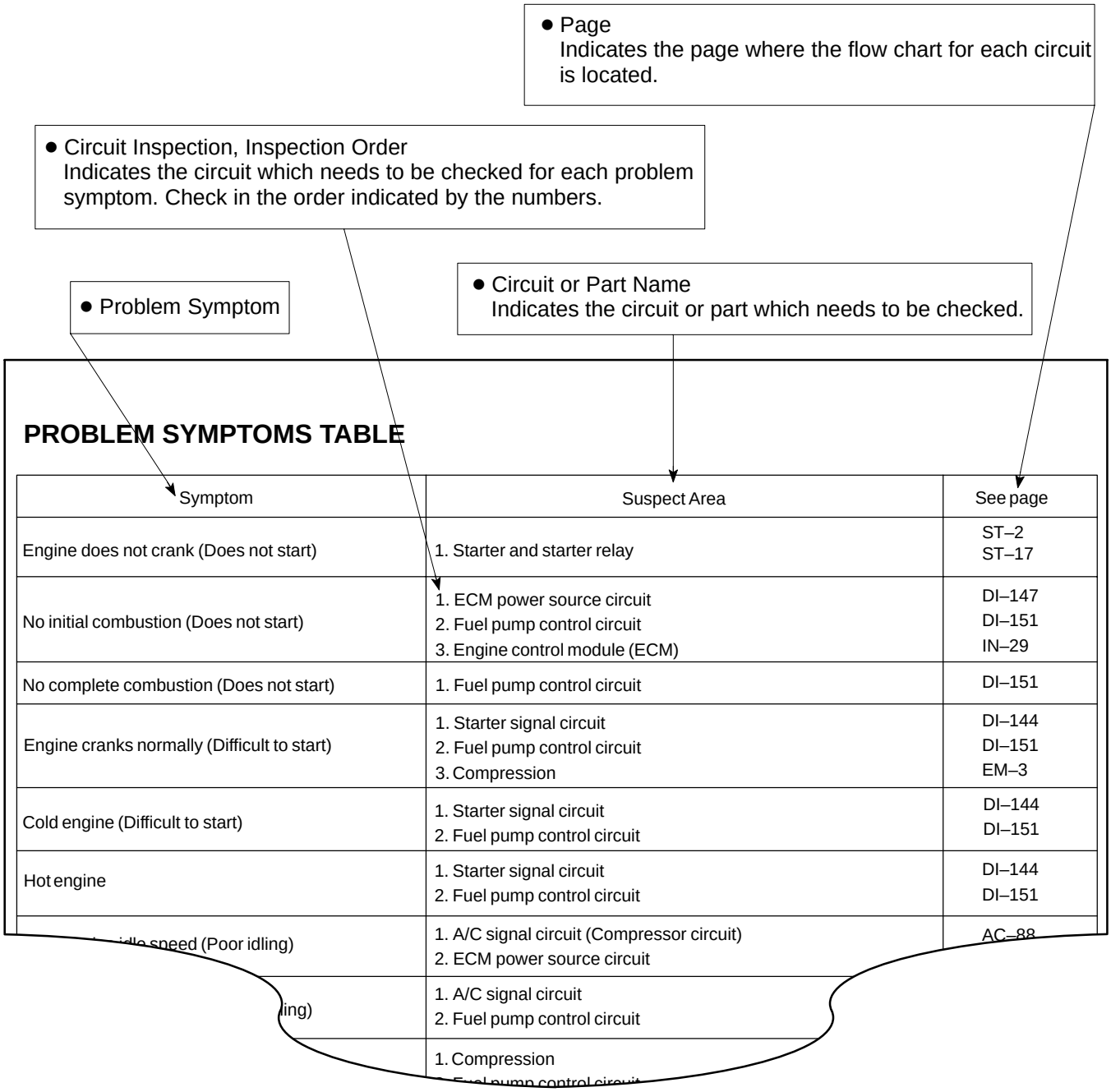

PROBLEM SYMPTOMS TABLE

Symptom	Suspect Area	See page
Engine does not crank (Does not start)	1. Starter and starter relay	ST–2 ST–17
No initial combustion (Does not start)	1. ECM power source circuit 2. Fuel pump control circuit 3. Engine control module (ECM)	DI–147 DI–151 IN–29
No complete combustion (Does not start)	1. Fuel pump control circuit	DI–151
Engine cranks normally (Difficult to start)	1. Starter signal circuit 2. Fuel pump control circuit 3. Compression	DI–144 DI–151 EM–3
Cold engine (Difficult to start)	1. Starter signal circuit 2. Fuel pump control circuit	DI–144 DI–151
Hot engine	1. Starter signal circuit 2. Fuel pump control circuit	DI–144 DI–151
idle speed (Poor idling)	1. A/C signal circuit (Compressor circuit) 2. ECM power source circuit	AC–88
ling)	1. A/C signal circuit 2. Fuel pump control circuit	
	1. Compression 2. Fuel pump control circuit	

6. CIRCUIT INSPECTION

How to read and use each page is shown below.

● Diagnostic Trouble Code No. and Detection Item

● Circuit Description
The major role and operation, etc. of the circuit and its component parts are explained.

DTC	P0325	Knock Sensor 1 Circuit Malfunction

CIRCUIT DESCRIPTION

Knock sensor is fitted to the cylinder block to detect engine knocking. This sensor contains a piezoelectric element which generates a voltage when it becomes deformed, which occurs when the cylinder block vibrates due to knocking. If engine knocking occurs, ignition timing is retarded to suppress it.

DTC No.	DTC Detecting Condition	Trouble Area
P0325	No knock sensor 1 signal to ECM with engine speed, 1,200 rpm or more.	● Open or short in knock sensor1 circuit ● Knock sensor 1 (looseness) ● ECM

If the ECM detects the above diagnosis conditions, it operates the fail safe function in which the corrective retard angle value is set to the maximum value.

● Indicates the diagnostic trouble code, diagnostic trouble code set parameter and suspect area of the problem.

WIRING DIAGRAM

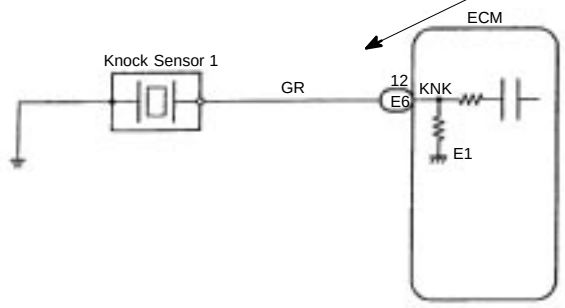

● Wiring Diagram
This shows a wiring diagram of the circuit.
Use this diagram together with ELECTRICAL WIRING DIAGRAM to thoroughly understand the circuit.
Wire colors are indicated by an alphabetical code.
B = Black, L = Blue, R = Red, BR = Brown,
LG = Light Green, V = Violet, G = Green,
O = Orange, W = White, GR = Gray, P = Pink,
Y = Yellow, SB = Sky Blue
The first letter indicates the basic wire color and the second letter indicates the color of the stripe.

V08423

● Indicates the position of the ignition switch during the check.

LOCK
Ignition Switch LOCK (OFF)

ON
Ignition Switch ON

START
Ignition Switch START

ACC
Ignition Switch ACC

● Inspection Procedure
Use the inspection procedure to determine if the circuit is normal or abnormal, and, if it is abnormal, use it to determine whether the problem is located in the sensors, actuators, wire harness or ECU.

INSPECTION PROCEDURE

1	**Check continuity between terminal KNK of ECM connector and body ground.**

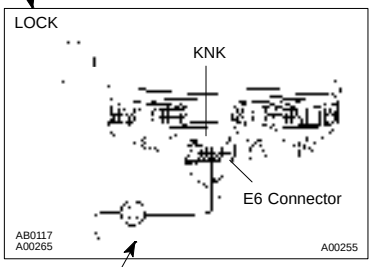

PREPARATION:
(a) Remove the glove compartment (See page SF–68).
(b) Disconnect the E6 connector of ECM.

CHECK:
Measure resistance between terminal KNK of ECM connector and body ground.

OK:
Resistance: 1 MΩ or higher

OK	**Go to step 3.**

NG

2	**Check knock sensor (See page SF–61).**

OK	**Replace knock sensor.**

● Indicates the place to check the voltage or resistance.
● Indicates the connector position to be checked, from the front or back side.

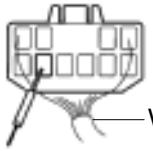

Check from the connector back side. (with harness)



Check from the connector front side. (without harness)
In this case, care must be taken not to bend the terminals.

● Indicates the condition of the connector of ECU during the check.

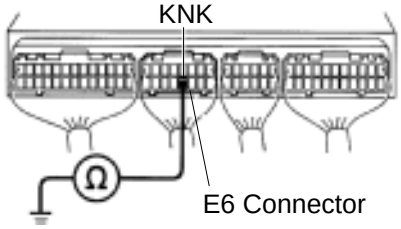

Connector being checked is connected.

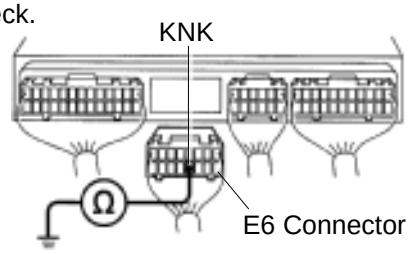

Connector being checked is disconnected.

V08425

IN01V–02

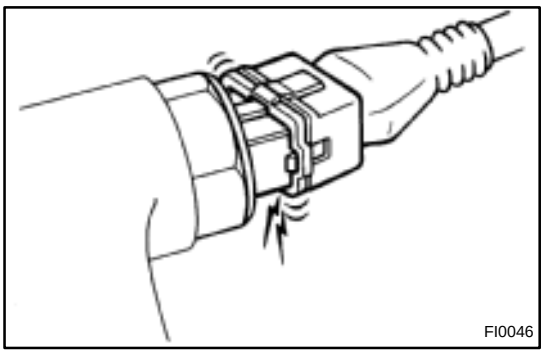
FI0046

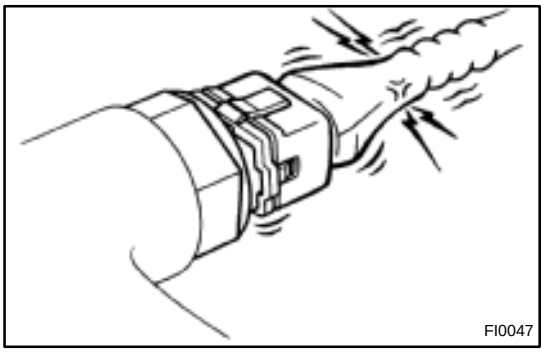
FI0047

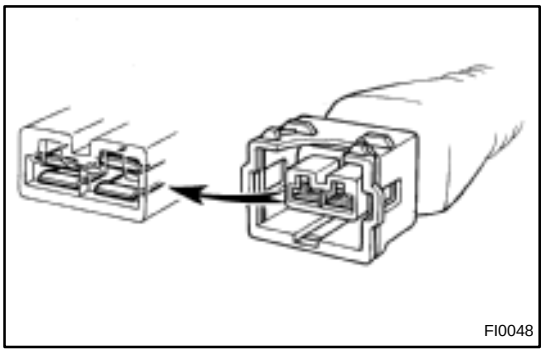
FI0048

HOW TO USE THE DIAGNOSTIC CHART AND INSPECTION PROCEDURE

1. CONNECTOR CONNECTION AND TERMINAL INSPECTION

- For troubleshooting, diagnostic trouble code charts or problem symptom table are provided for each circuit with detailed inspection procedures on the following pages.
- When all the component parts, wire harnesses and connectors of each circuit except the ECU are found to be normal in troubleshooting, then it is determined that the problem is in the ECU. Accordingly, if diagnosis is performed without the problem symptoms occurring, refer to Step 8 to replace the ECU. So always confirm that the problem symptoms are occurring, or proceed with inspection while using the symptom simulation method.
- The instructions ”Check wire harness and connector” and ”Check and replace ECU” which appear in the inspection procedure, are common and applicable to all diagnostic trouble codes. Follow the procedure outlined below whenever these instructions appear.

OPEN CIRCUIT:

This could be due to a disconnected wire harness, faulty contact in the connector, and a connector terminal pulled out, etc.

HINT:

- It is rarely the case that a wire is broken in the middle of it. Most cases occur at the connector. In particular, carefully check the connectors of sensors and actuators
- Faulty contact could be due to rusting of the connector terminals, to foreign materials entering terminals or a deformation of connector terminals. Simply disconnecting and reconnecting the connectors once changes the condition of the connection and may result in a return to normal operation. Therefore, in troubleshooting, if no abnormality is found in the wire harness and connector check, but the problem disappears after the check, then the cause is considered to be in the wire harness or connectors.

SHORT CIRCUIT:

This could be due to a contact between wire harness and the body ground or to a short circuit occurred inside the switch, etc.

HINT:

When there is a short circuit between the wire harness and body ground, check thoroughly whether the wire harness is caught in the body or is clamped properly.

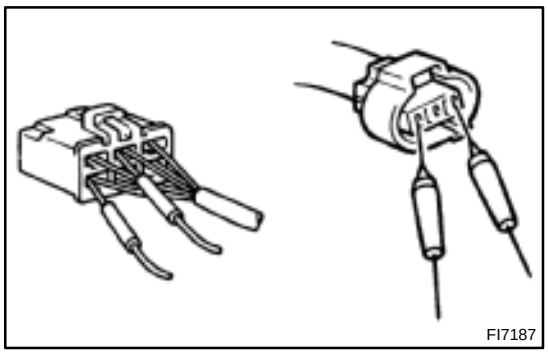
FI7187

2. CONNECTOR HANDLING

When inserting tester probes into a connector, insert them from the rear of the connector. When necessary, use mini test leads. For water resistant connectors which cannot be accessed from behind, take good care not to deform the connector terminals.

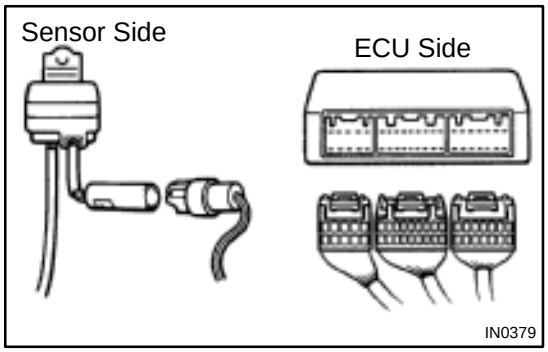

IN0379

3. CONTINUITY CHECK (OPEN CIRCUIT CHECK)

(a) Disconnect the connectors at both ECU and sensor sides.

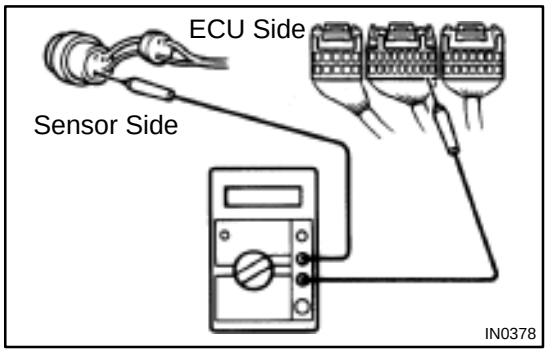

IN0378

(b) Measure the resistance between the applicable terminals of the connectors.

Resistance: 1 Ω or less

HINT:

Measure the resistance while lightly shaking the wire harness vertically and horizontally.

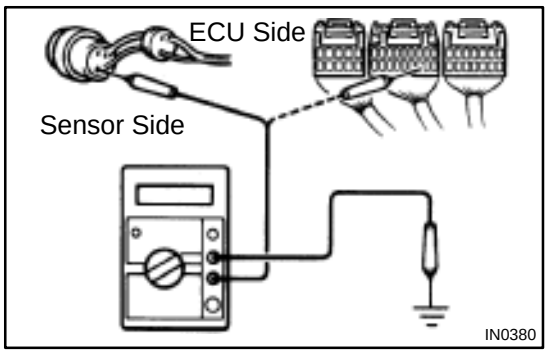

IN0380

4. RESISTANCE CHECK (SHORT CIRCUIT CHECK)

(a) Disconnect the connectors on both ends.

(b) Measure the resistance between the applicable terminals of the connectors and body ground. Be sure to carry out this check on the connectors on both ends.

Resistance: 1 MΩ or higher

HINT:

Measure the resistance while lightly shaking the wire harness vertically and horizontally.

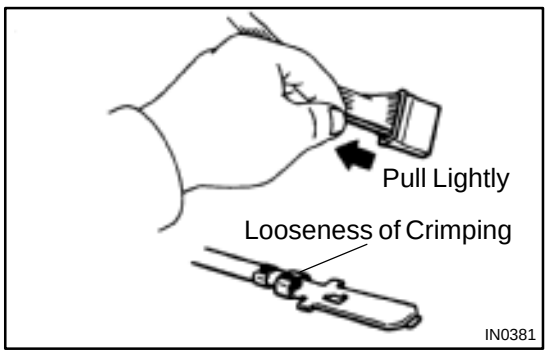

IN0381

5. VISUAL CHECK AND CONTACT PRESSURE CHECK

(a) Disconnect the connectors at both ends.

(b) Check for rust or foreign material, etc. in the terminals of the connectors.

(c) Check crimped portions for looseness or damage and check that the terminals are secured in lock portion.

HINT:

The terminals should not come out when pulled lightly from the back.

(d) Prepare a test male terminal and insert it in the female terminal, then pull it out.

NOTICE:

When testing a gold–plated female terminal, always use a gold–plated male terminal.

HINT:

When the test terminal is pulled out more easily than others, there may be poor contact in that section.

Fig. 1

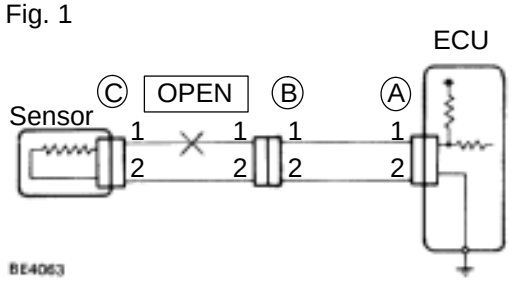

6. CHECK OPEN CIRCUIT

For the open circuit in the wire harness in Fig. 1, perform "(a) Continuity Check" or "(b) Voltage Check" to locate the section.

Fig. 2

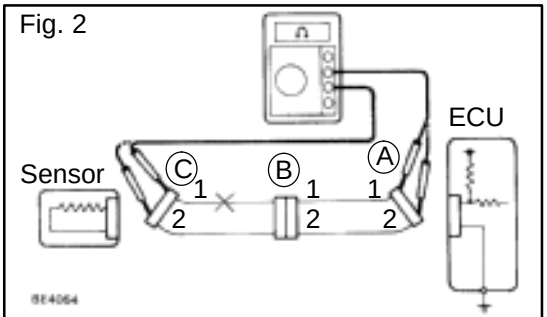

(a) Check the continuity.

(1) Disconnect connectors "A" and "C" and measure the resistance between them.

In the case of Fig. 2,

Between terminal 1 of connector "A" and terminal 1 of connector "C" → No continuity (open)

Between terminal 2 of connector "A" and terminal 2 of connector "C" → Continuity

Therefore, it is found out that there is an open circuit between terminal 1 of connector "A" and terminal 1 of connector "C".

Fig. 3

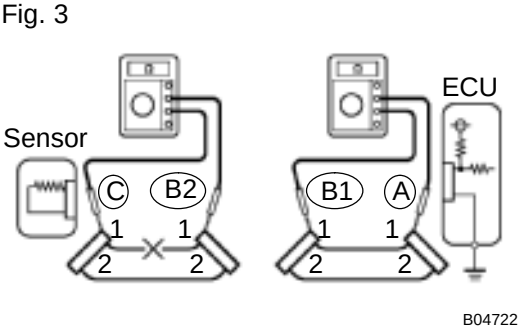

(2) Disconnect connector "B" and measure the resistance between the connectors.

In the case of Fig. 3,

Between terminal 1 of connector "A" and terminal 1 of connector "B1" → Continuity

Between terminal 1 of connector "B2" and terminal 1 of connector "C" → No continuity (open)

Therefore, it is found out that there is an open circuit between terminal 1 of connector "B2" and terminal 1 of connector "C".

Fig. 4

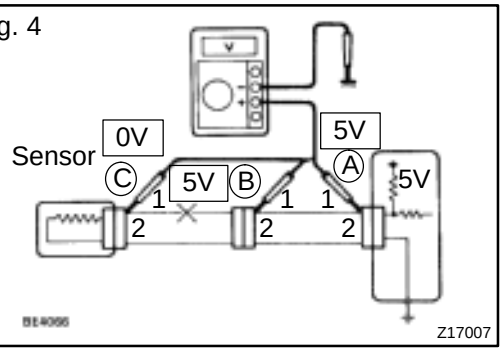

(b) Check the voltage.

In a circuit in which voltage is applied (to the ECU connector terminal), an open circuit can be checked for by conducting a voltage check.

As shown in Fig. 4, with each connector still connected, measure the voltage between body ground and terminal 1 of connector ”A” at the ECU 5V output terminal, terminal 1 of connector ”B”, and terminal 1 of connector ”C”, in that order.

If the results are:

5V: Between Terminal 1 of connector ”A” and Body Ground
5V: Between Terminal 1 of connector ”B” and Body Ground
0V: Between Terminal 1 of connector ”C” and Body Ground

Then it is found out that there is an open circuit in the wire harness between terminal 1 of ”B” and terminal 1 of ”C”.

Fig. 5

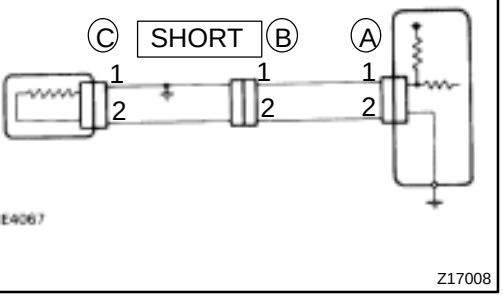

7. CHECK SHORT CIRCUIT

If the wire harness is ground shorted as in Fig. 5, locate the section by conducting a ”continuity check with ground”.

Fig. 6

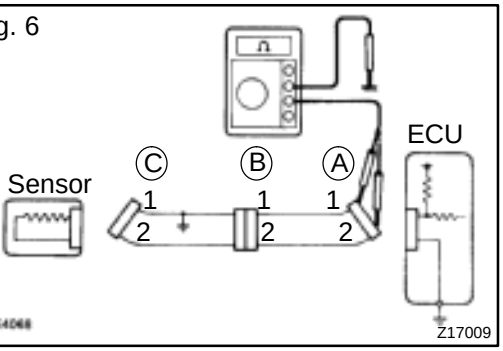

Check the continuity with ground.

(1) Disconnect connectors ”A” and ”C” and measure the resistance between terminal 1 and 2 of connector ”A” and body ground.

In the case of Fig. 6

Between terminal 1 of connector ”A” and body ground → Continuity (short)

Between terminal 2 of connector ”A” and body ground → No continuity

Therefore, it is found out that there is a short circuit between terminal 1 of connector ”A” and terminal 1 of connector ”C”.

Fig. 7

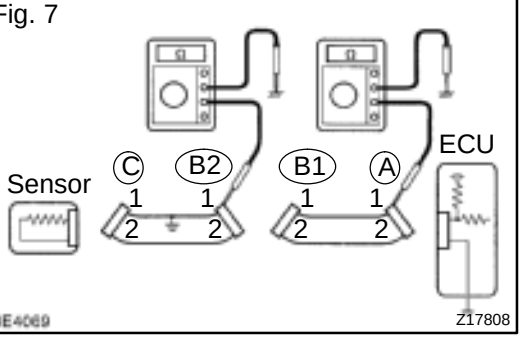

(2) Disconnect connector ”B” and measure the resistance between terminal 1 of connector ”A” and body ground, and terminal 1 of connector ”B2” and body ground.
Between terminal 1 of connector ”A” and body ground → No continuity
Between terminal 1 of connector ”B2” and body ground → Continuity (short)
Therefore, it is found out that there is a short circuit between terminal 1 of connector ”B2” and terminal 1 of connector ”C”.

8. CHECK AND REPLACE ECU

First check the ECU ground circuit. If it is faulty, repair it. If it is normal, the ECU could be faulty, so replace the ECU with a normal functioning one and check that the symptoms appear.

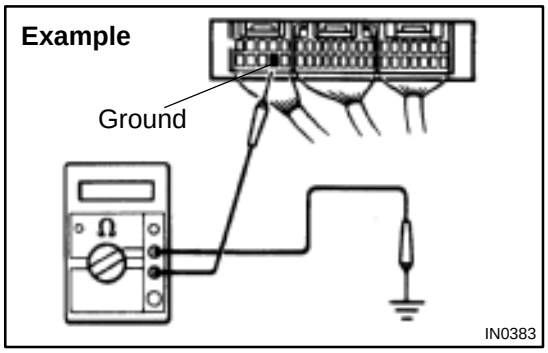

(1) Measure the resistance between the ECU ground terminal and the body ground.

Resistance: 1 Ω or less

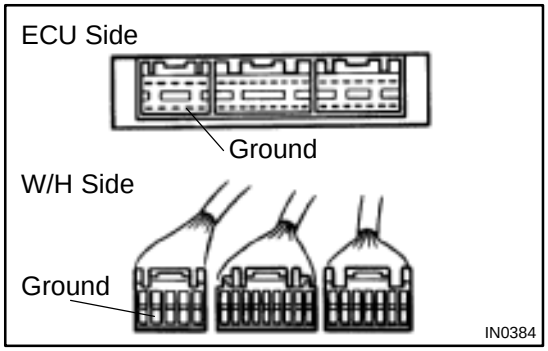

(2) Disconnect the ECU connector, check the ground terminals on the ECU side and the wire harness side for bend and check the contact pressure.

FOR ALL OF VEHICLES

IN0DB–03

PRECAUTION

1. FOR VEHICLES EQUIPPED WITH SRS AIRBAG

(a) The TOYOTA TACOMA is equipped with an SRS (Supplemental Restraint System), such as the driver airbag and front passenger airbag.
Failure to carry out service operations in the correct sequence could cause the supplemental restraint system to unexpectedly deploy during servicing, possibly leading to a serious accident.
Further, if a mistake is made in servicing the supplemental restraint system, it is possible the SRS may fail to operate when required. Before servicing (including removal or installation of parts, inspection or replacement), be sure to read the following items carefully, then follow the correct procedure described in this manual.

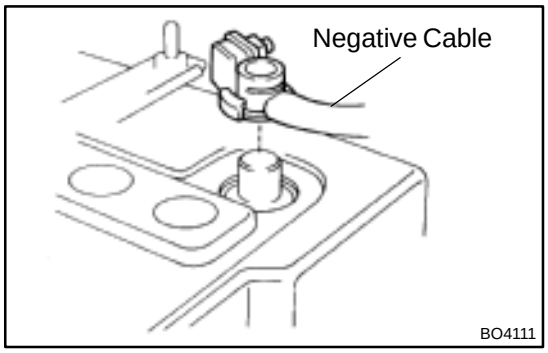

(b) GENERAL NOTICE

(1) Malfunction symptoms of the supplemental restraint system are difficult to confirm, so the diagnostic trouble codes become the most important source of information when troubleshooting. When troubleshooting the supplemental restraint system, always inspect the diagnostic trouble codes before disconnecting the battery (See page DI–456).

(2) Work must be started after 90 seconds from the time the ignition switch is turned to the ”LOCK” position and the negative (–) terminal cable is disconnected from the battery.
(The supplemental restraint system is equipped with a back–up power source so that if work is started within 90 seconds of disconnecting the negative (–) terminal cable from the battery, the SRS may deploy.)
When the negative (–) terminal cable is disconnected from the battery, memory of the clock and audio systems will be cancelled. So before starting work, make a record of the contents memorized by the each memory system. Then when work is finished, reset the clock and audio systems as before.
To avoid erasing the memory of each memory system, never use a back–up power supply another battery.

(3) Even in cases of a minor collision where the SRS does not deploy, the steering wheel pad, the passenger's airbag assembly, airbag sensor assembly and front airbag sensor should be inspected (See page RS–13, RS–27, RS–40 and RS–45).
(4) Never use SRS parts from another vehicle. When replacing parts, replace them with new parts.
(5) Before repairs, remove the airbag sensor if shocks are likely to be applied to the sensor during repairs.
(6) Never disassemble and repair the steering wheel pad, front passenger airbag assembly, airbag sensor assembly and front airbag sensor.
(7) If the steering wheel pad, front passenger airbag assembly, airbag sensor assembly and front airbag sensor have been dropped, or if there are cracks, dents or other defects in the case, bracket or connector, replace them with new ones.
(8) Do not expose the steering wheel pad, front passenger airbag assembly, airbag sensor assembly and front airbag sensor directly to hot air or flames.
(9) Use a volt/ohmmeter with high impedance (10 kΩ/V minimum) for troubleshooting of the electrical circuit.
(10) Information labels are attached to the periphery of the SRS components. Follow the instructions on the notices.
(11) After work on the supplemental restraint system is completed, check the SRS warning light (See page DI–456).

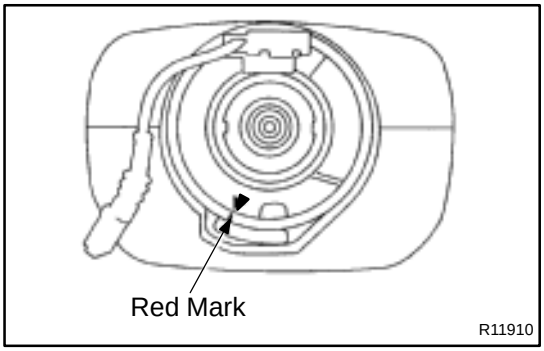

(c) SPIRAL CABLE (in Combination Switch)
The steering wheel must be fitted correctly to the steering column with the spiral cable at the neutral position, otherwise cable disconnection and other troubles may result. Refer to SR–20 concerning correct steering wheel installation.

(d) STEERING WHEEL PAD (with Airbag)

(1) When removing the steering wheel pad or handling a new steering wheel pad, it should be placed with the pad top surface facing up.
In this case, the twin–lock type connector lock lever should be in the locked state and care should be taken to place it so the connector will not be damaged. In addition do not store a steering wheel pad on top of another one. Storing the pad with its metallic surface up may lead to a serious accident if the airbag inflates for some reason.

(2) Never measure the resistance of the airbag squib. (This may cause the airbag to deploy, which is very dangerous.)

(3) Grease should not be applied to the steering wheel pad and the pad should not be cleaned with detergents of any kind.

(4) Store the steering wheel pad where the ambient temperature remains below 93˚C (200˚F), without high humidity and away from electrical noise.

(5) When using electric welding, first disconnect the airbag connector (yellow color and 2 pins) under the steering column near the combination switch connector before starting work.

(6) When disposing of a vehicle or the steering wheel pad alone, the airbag should be deployed using an SST before disposal (See page RS–15).
Carry out the operation in a safe place away from electrical noise.

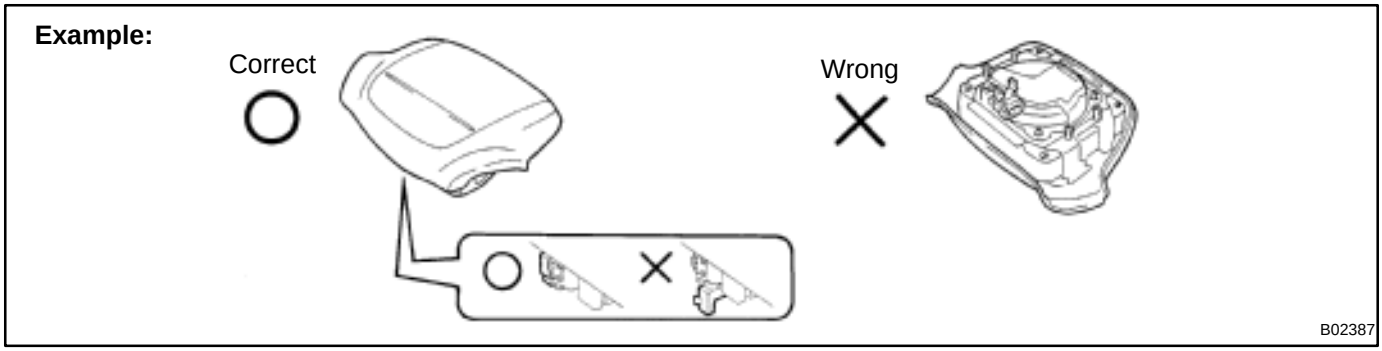

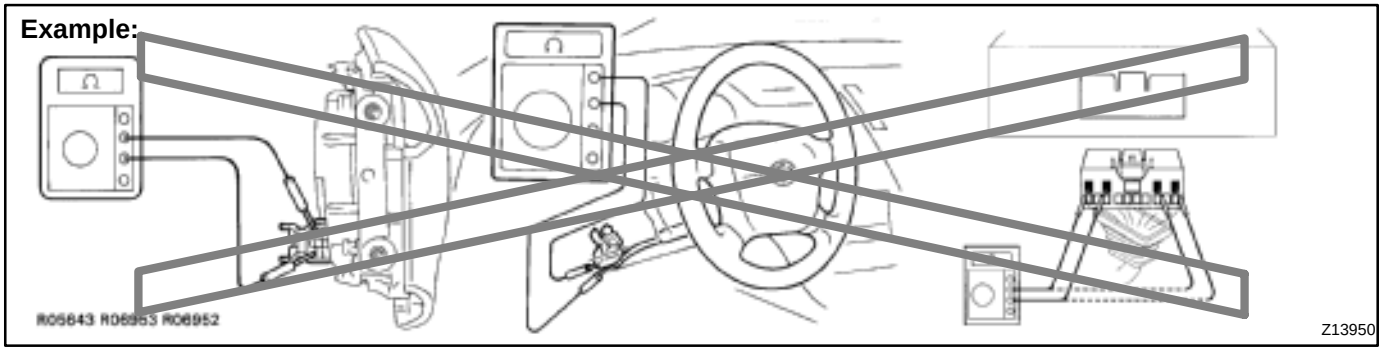

(e) FRONT PASSENGER AIRBAG ASSEMBLY

(1) Always store a removed or new front passenger airbag assembly with the airbag deployment direction facing up.
Storing the airbag assembly with the airbag deployment direction facing down could cause a serious accident if the airbag deploys.

(2) Never measure the resistance of the airbag squib. (This may cause the airbag to deploy, which is very dangerous.)

(3) Grease should not be applied to the front passenger airbag assembly and the airbag door should not be cleaned with detergents of any kind.

(4) Store the airbag assembly where the ambient temperature remains below 93˚C (200˚F), without high humidity and away from electrical noise.

(5) When using electric welding, first disconnect the airbag connector (yellow color and 2 pins) installed on assembly before starting work.

(6) When disposing of a vehicle or the airbag assembly alone, the airbag should be deployed using an SST before disposal (See page RS–29).
Perform the operation in a safe place away from electrical noise.

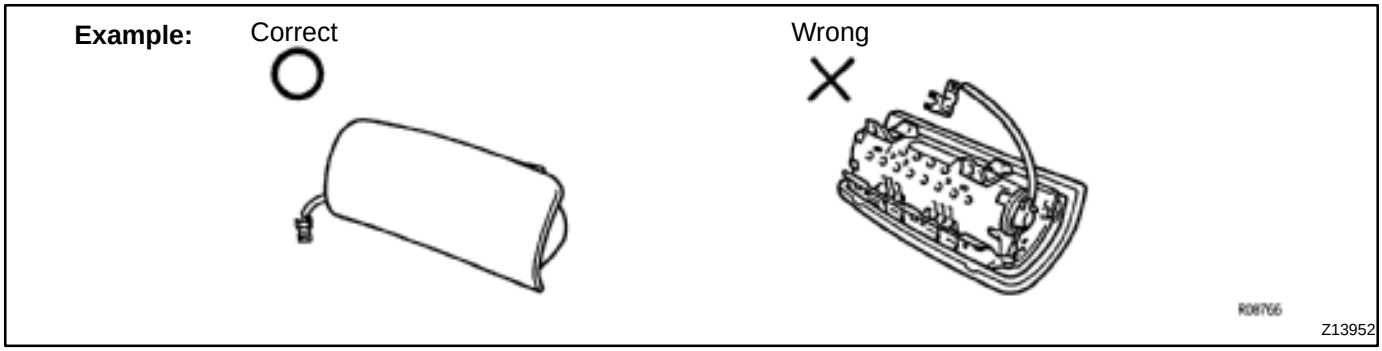

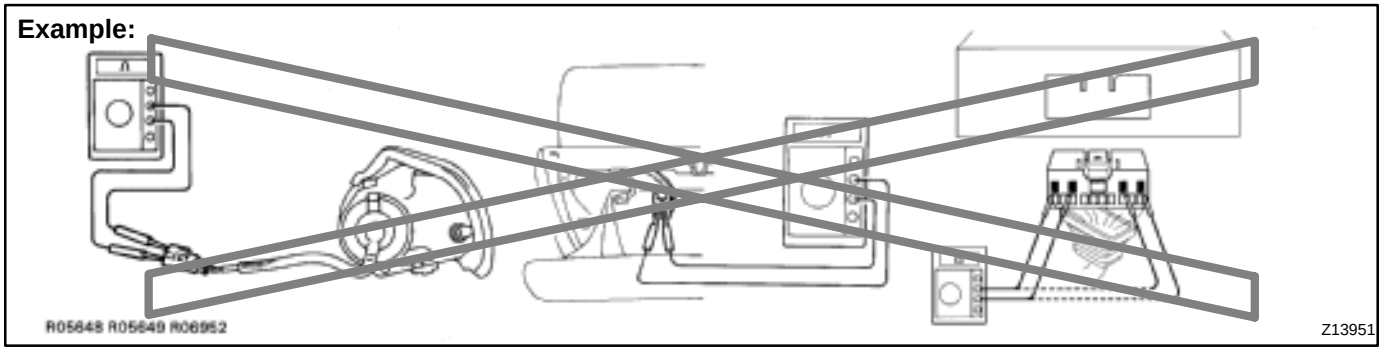

(f) SEAT BELT PRETENSIONER

(1) Never measure the resistance of the seat belt pretensioner. (This may cause the seat belt pretensioner activation which is very dangerous.)

(2) Never disassemble the seat belt pretensioner.

(3) Never install the seat belt pretensioner in another vehicle.

(4) Store the seat belt pretensioner where the ambient temperature remains below 80˚C (176˚F) and away from electrical noise without high humidity.

(5) When using electric welding, first disconnect the connector (yellow color and 2 pins) before starting work.

(6) When disposing of a vehicle or the seat belt pretensioner alone, the seat belt pretensioner should be activated before disposal (See page BO–103). Perform the operation in a safe place away from electrical noise.

(7) The seat belt pretensioner is hot after activation, so let it cool down sufficiently before the disposal. However never apply water to the seat belt pretensioner.

Example:

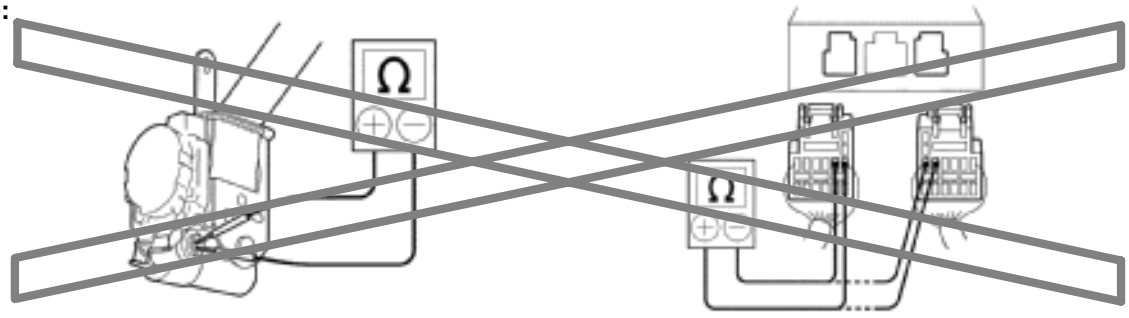

B02121

(g) AIRBAG SENSOR ASSEMBLY

(1) Never reuse the airbag sensor assembly involved in a collision when the SRS has deployed.

(2) The connectors to the airbag sensor assembly should be connected or disconnected with the sensor mounted on the floor. If the connectors are connected or disconnected while the airbag sensor assembly is not mounted to the floor, it could cause undesired ignition of the supplemental restraint system.

(3) Work must be started after 90 seconds from the time the ignition switch is turned to the ”LOCK” position and the negative (–) terminal cable is disconnected from the battery, even if only loosening the set bolts of the airbag sensor assembly.

(h) WIRE HARNESS AND CONNECTOR

The SRS wire harness is integrated with the cowl wire harness assembly and floor wire harness assembly. All the connectors for the system are also a standard yellow color. If the SRS wire harness becomes disconnected or the connector becomes broken due to an accident, etc., repair or replace it.

2. FOR VEHICLES EQUIPPED WITH A CATALYTIC CONVERTER

CAUTION:

If large amount of unburned gasoline flows into the converter, it may overheat and create a fire hazard. To prevent this, observe the following precautions and explain them to your customer.

(a) Use only unleaded gasoline.

(b) Avoid prolonged idling.
Avoid running the engine at idle speed for more than 20 minutes.

(c) Avoid spark jump test.
(1) Perform spark jump test only when absolutely necessary. Perform this test as rapidly as possible.
(2) While testing, never race the engine.

(d) Avoid prolonged engine compression measurement
Engine compression tests must be done as rapidly as possible.

(e) Do not run engine when fuel tank is nearly empty.
This may cause the engine to misfire and create an extra load on the converter.

(f) Avoid coasting with ignition turned off.

(g) Do not dispose of used catalyst along with parts contaminated with gasoline or oil.

3. IF VEHICLE IS EQUIPPED WITH MOBILE COMMUNICATION SYSTEM

For vehicles with mobile communication systems such as two–way radios and cellular telephones, observe the following precautions.

(1) Install the antenna as far as possible away from the ECU and sensors of the vehicle's electronic system.
(2) Install the antenna feeder at least 20 cm (7.87 in.) away from the ECU and sensors of the vehicle's electronic systems. For details about ECU and sensors locations, refer to the section on the applicable component.
(3) Do not wind the antenna feeder together with the other wiring as much as possible, also avoid running the antenna feeder parallel with other wire harness.
(4) Check that the antenna and feeder are correctly adjusted.
(5) Do not install powerful mobile communications system.

4. FOR USING OBD II SCAN TOOL OR TOYOTA HAND–HELD TESTER

CAUTION:

Observe the following for safety reasons:

- **Before using the OBD II scan tool or TOYOTA hand–held tester, the OBD II scan tool's instruction book or TOYOTA hand–held tester's operator manual should be read thoroughly.**
- **Be sure to route all cables securely when driving with the OBD II scan tool or TOYOTA hand–held tester connected to the vehicle. (i.e. Keep cables away from feet, pedals, steering wheel and shift lever.)**
- **Two persons are required when test driving with the OBD II scan tool or TOYOTA hand–held tester, one person to drive the vehicle and one person to operate the OBD II scan tool or TOYOTA hand–held tester.**

HOW TO TROUBLESHOOT ECU CONTROLLED SYSTEMS

IN01T–04

GENERAL INFORMATION

A large number of ECU controlled systems are used in the TOYOTA TACOMA. In general, the ECU controlled system is considered to be a very intricate system requiring a high level of technical knowledge and expert skill to troubleshoot. However, the fact is that if you proceed to inspect the circuits one by one, troubleshooting of these systems is not complex. If you have adequate understanding of the system and a basic knowledge of electricity, accurate diagnosis and necessary repair can be performed to locate and fix the problem. This manual is designed through emphasis of the above standpoint to help service technicians perform accurate and effective troubleshooting, and is compiled for the following major ECU controlled systems:

The troubleshooting procedure and how to make use of it are described on the following pages.

System	Page
1. 2RZ–FE, 3RZ–FE Engine	DI–1
2. 5VZ–FE Engine	DI–180
3. A340E, A340F Automatic Transmission	DI–340
4. Anti–Lock Brake System	DI–413
5. Supplemental Restraint System	DI–454
6. Cruise Control System (DENSO MADE)	DI–557
7. Cruise Control System (FORD MADE)	DI–610

FOR USING OBD II SCAN TOOL OR TOYOTA HAND–HELD TESTER

- Before using the scan tool or tester, the scan tool's instruction book or tester's operator manual should be read thoroughly.
- If the scan tool or tester cannot communicate with ECU controlled systems when you have connected the cable of the scan tool or tester to DLC3, turned the ignition switch ON and operated the scan tool, there is a problem on the vehicle side or tool side.
  (1) If communication is normal when the tool is connected to another vehicle, inspect the diagnosis data link line (Bus⊕line) or ECU power circuit of the vehicle.
  (2) If communication is still not possible when the tool is connected to another vehicle, the problem is probably in the tool itself, so perform the Self Test procedures outline in the Tester Operator's Manual.

IDENTIFICATION INFORMATION

IN01P–03

VEHICLE IDENTIFICATION AND ENGINE SERIAL NUMBER

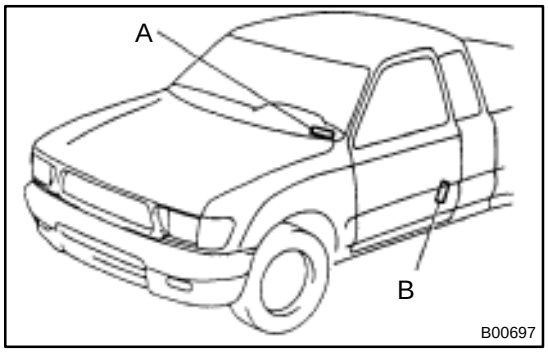

1. VEHICLE IDENTIFICATION NUMBER

The vehicle identification number is stamped on the vehicle identification number plate and certification label.

A: Vehicle Identification Number Plate

B: Certification Label

2RZ–FE, 3RZ–FE Engine:

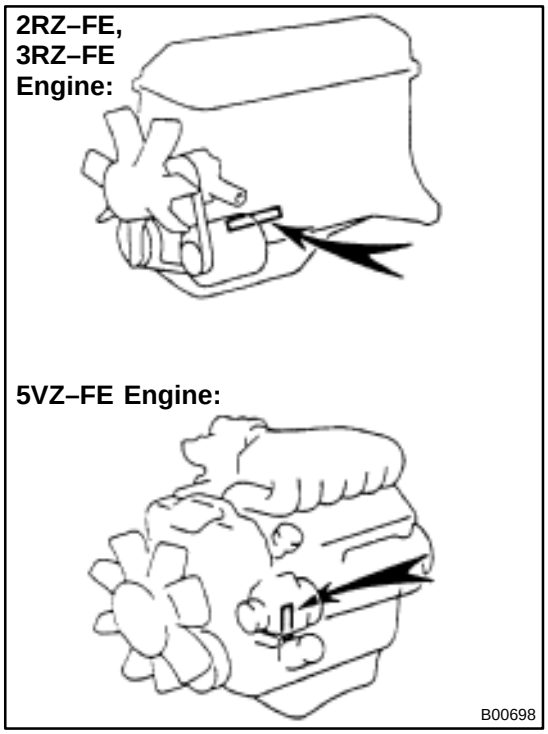

2. ENGINE SERIAL NUMBER

The engine serial number is stamped on the engine block, as shown in the illustration.

IN0DA–01

VEHICLE LIFT AND SUPPORT LOCATIONS

2WD Except PRE RUNNER:

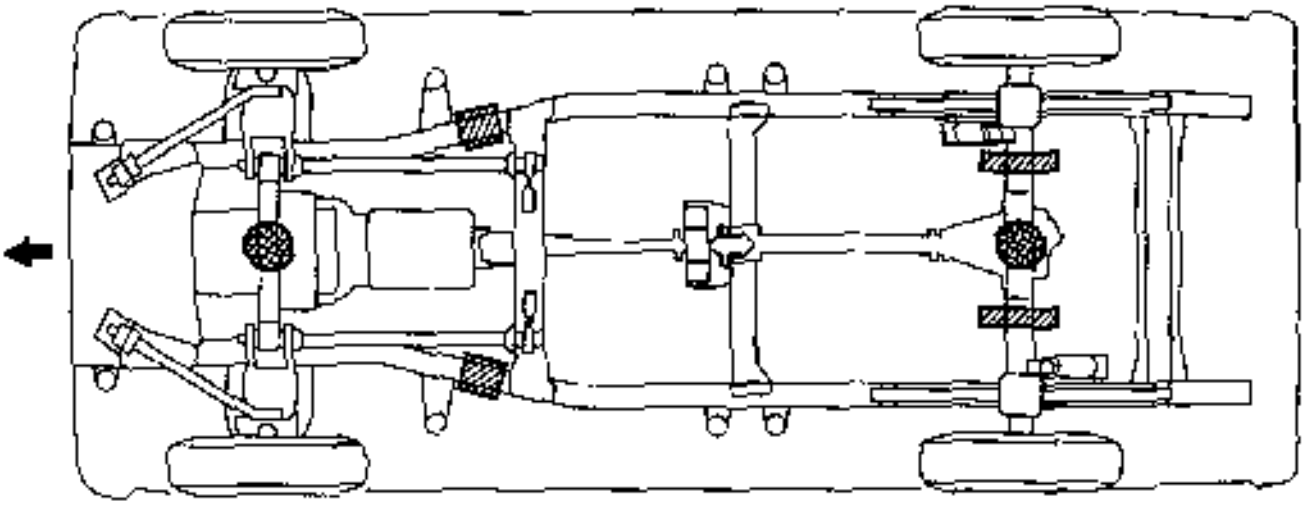

4WD:

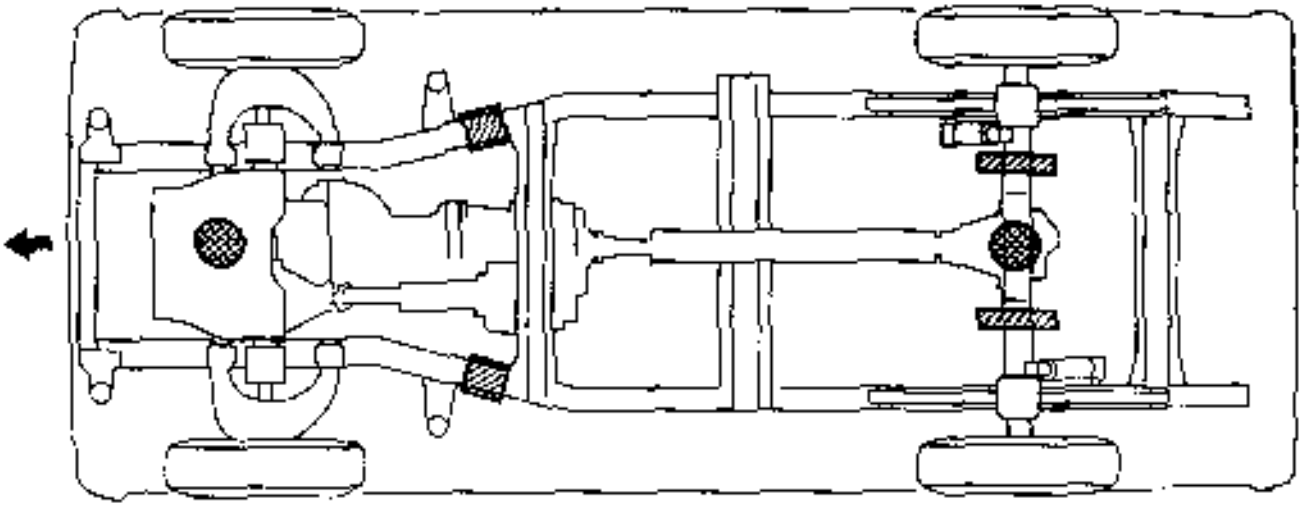

JACK POSITION •

Front • • • • • • • • • • Center of crossmember

Rear • • • • • • • • • • Under the rear differential

SUPPORT POSITION

Safety stand • • • • • • • • • • • • • • • • • • •

B00699

PRE RUNNER:

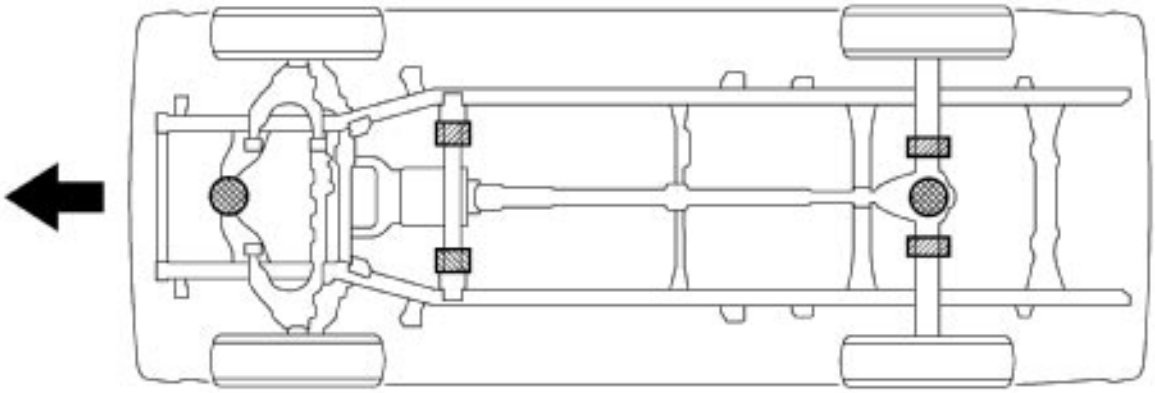

JACK POSITION .....

Front ..... Center of crossmember

Rear ..... Under the rear differential

SUPPORT POSITION

Safety stand .....

B04189

OIL COOLER

COMPONENTS

LU01L–03

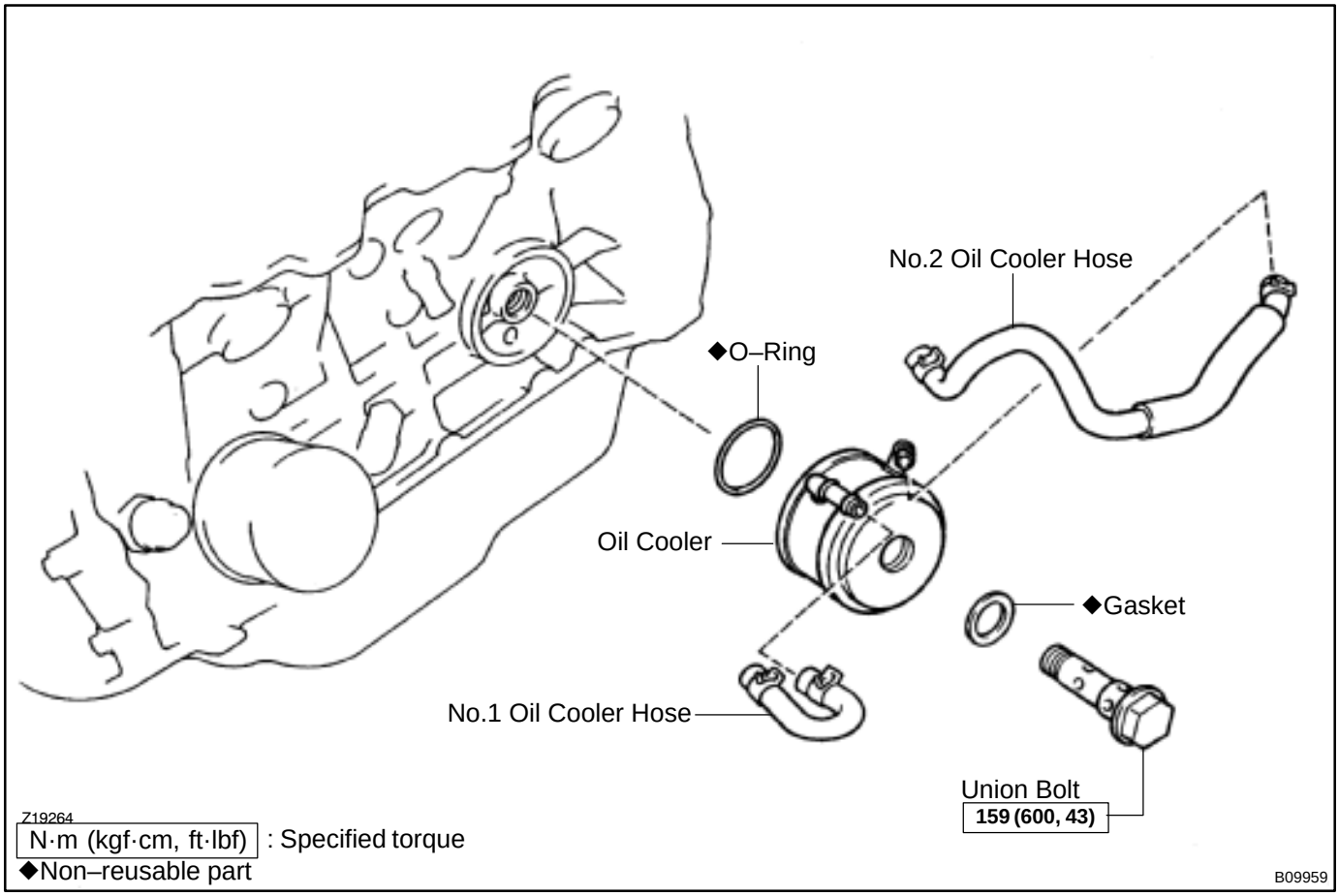

LU0IS–01

INSPECTION

INSPECT OIL COOLER

Check the oil cooler for damage or clogging.
If necessary, replace the oil cooler.

LU0IT–01

INSTALLATION

Installation is in the reverse order of removal. (See page LU–18)

LU0IR–01

REMOVAL

1. DRAIN ENGINE COOLANT

2. DISCONNECT OIL COOLER HOSES

Disconnect the No.1 and No.2 oil cooler hoses.

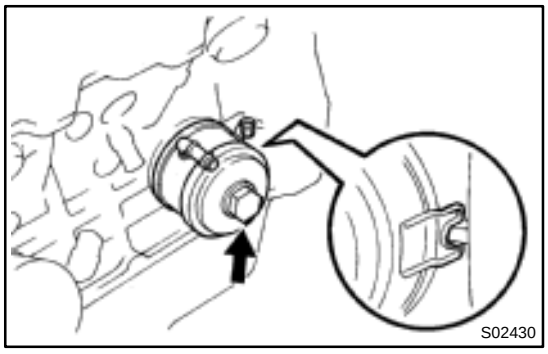

3. REMOVE OIL COOLER

Remove the bolt, relief valve, gaskets and oil cooler.

Torque: 59 N·m (600 kgf·cm, 43 ft·lbf)

HINT:

At the time of installation, please refer to the following items.

- Replace the O–ring with a new part.
- Use a new gasket to the relief valve.

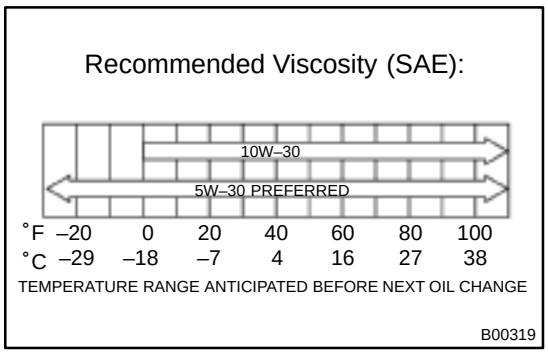

OIL AND FILTER

INSPECTION

LU022–03

1. CHECK ENGINE OIL QUALITY

Check the oil for deterioration, entry of water, discoloring or thinning.

If the quality is visibly poor, replace the oil.

Oil grade:

API grade SJ, Energy–Conserving or ILSAC multigrade engine oil. SAE 5W–30 is the best choice for your vehicle, for good fuel economy, and good starting in cold weather.

2. CHECK OIL LEVEL

After warming up the engine and then 5 minutes after the engine stop, the oil level should be between the ”L” and ”F” marks of the dipstick.

If low, check for leakage and add oil up to the ”F” mark.

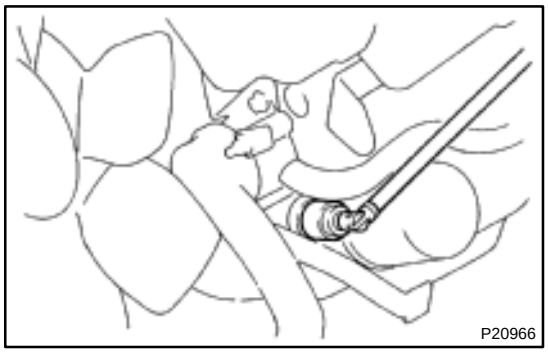

3. REMOVE OIL PRESSURE SWITCH

Using SST, remove the oil pressure switch.

SST 09816–30010

4. INSTALL OIL PRESSURE GAUGE

5. WARM UP ENGINE

Allow the engine to warm up to normal operating temperature.

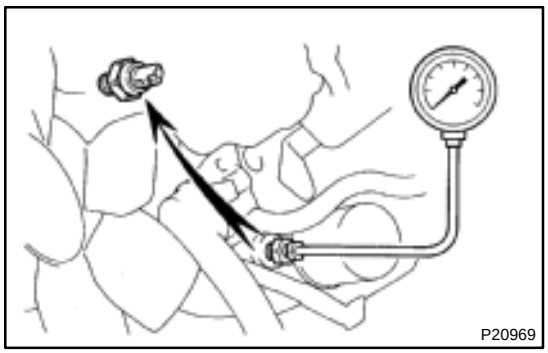

6. CHECK OIL PRESSURE

Oil pressure:

at idle	29 kPa (0.3 kgf/cm^2, 4.3 psi) or more
at 3,000 rpm	245 – 520 kPa (2.5 – 5.3 kgf/cm^2, 36 – 75 psi)

7. REMOVE OIL PRESSURE GAUGE

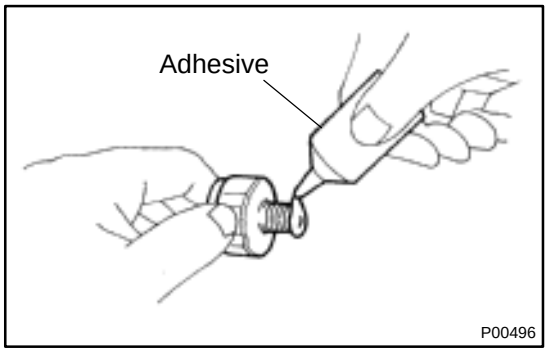

8. REINSTALL OIL PRESSURE SWITCH

(a) Apply adhesive to 2 or 3 threads.

Adhesive:

Part No. 08833–00080, THREE BOND 1344, LOCTITE 242 or equivalent

(b) Using SST, install the oil pressure switch.

SST 09816–30010

Torque: 15 N·m (150 kgf·cm, 11 ft·lbf)

9. START ENGINE AND CHECK FOR LEAKS

LU024–02

REPLACEMENT

CAUTION:

- **Prolonged and repeated contact with mineral oil will result in the removal of natural fats from the skin, leading to dryness, irritation and dermatitis. In addition, used engine oil contains potentially harmful contaminants which may cause skin cancer.**
- **Care should be taken, therefore, when changing engine, oil to minimize the frequency and length of time your skin is exposed to used engine oil. Protective clothing and gloves that cannot be penetrated by oil should be worn. The skin should be thoroughly washed with soap and water, or use water–less hand cleaner, to remove any used engine oil. Do not use gasoline, thinners, or solvents.**
- **In order to preserve the environment, used oil and used oil filters must be disposed of only at designated disposal sites.**

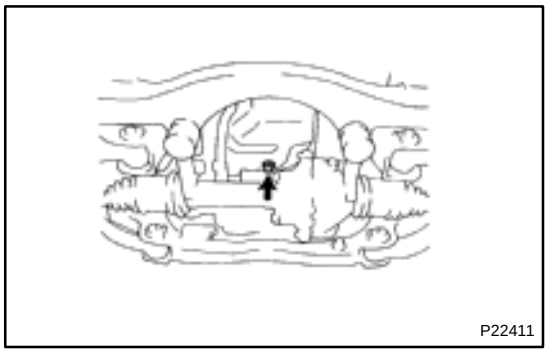

1. DRAIN ENGINE OIL

(a) Remove the oil filler cap.
(b) Remove the oil dipstick.
(c) Remove the oil drain plug and drain the oil into a container.

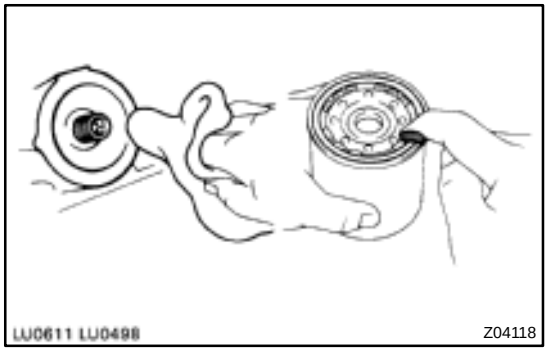

2. REPLACE OIL FILTER

(a) Using SST, remove the oil filter (located on left side of the cylinder block).
SST 09228–07501
(b) Clean the filter contact surface on the filter mounting.
(c) Apply clean engine oil to the gasket of a new oil filter.
(d) Tighten the filter by hand until the gasket contacts the seat of the filter mounting. Then using SST, give it an additional 3/4 turn to seat the filter.
SST 09228–07501

3. REFILL WITH ENGINE OIL

(a) Clean and install the oil drain plug with a new gasket.

(b) Fill the engine with new oil.

Oil capacity:

2WD		
Drain and refill	w/ Oil filter change	5.9 liters (6.2 US qts, 5.2 imp. qts)
	w/o Oil filter change	5.1 liters (5.4 US qts, 4.5 imp. qts)
Dry fill		6.3 liters (6.7 US qts, 5.5 imp. qts)
4WD		
Drain and refill	w/ Oil filter change	5.2 liters (5.5 US qts, 4.6 imp. qts)
	w/o Oil filter change	4.9 liters (5.2 US qts, 4.3 imp. qts)
Dry fill		5.9 liters (6.2 US qts, 5.2 imp. qts)

(c) Reinstall the oil filler cap.

4. START ENGINE AND CHECK FOR LEAKS

5. RECHECK ENGINE LEVEL

OIL PUMP

COMPONENTS

LU021–02

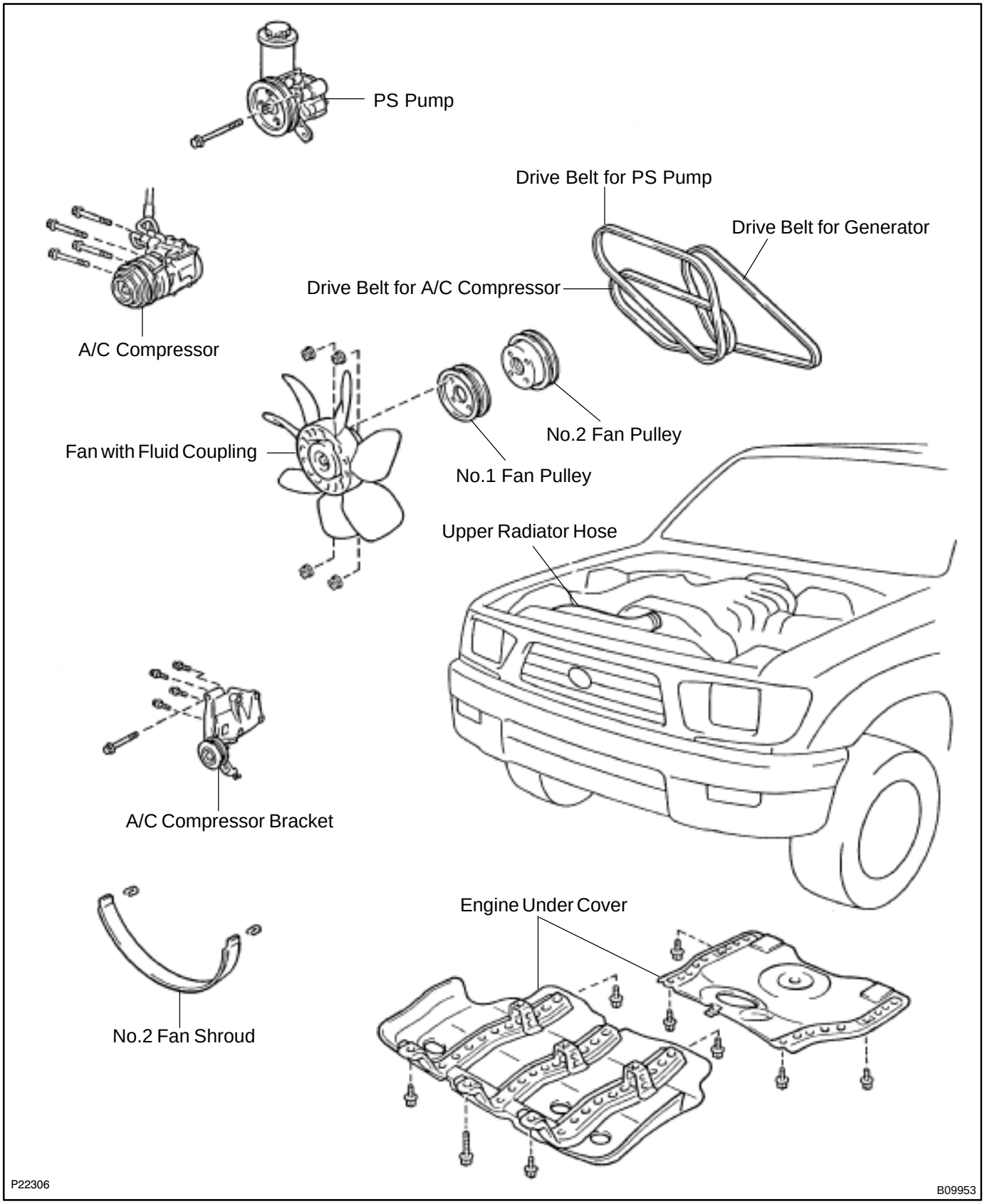

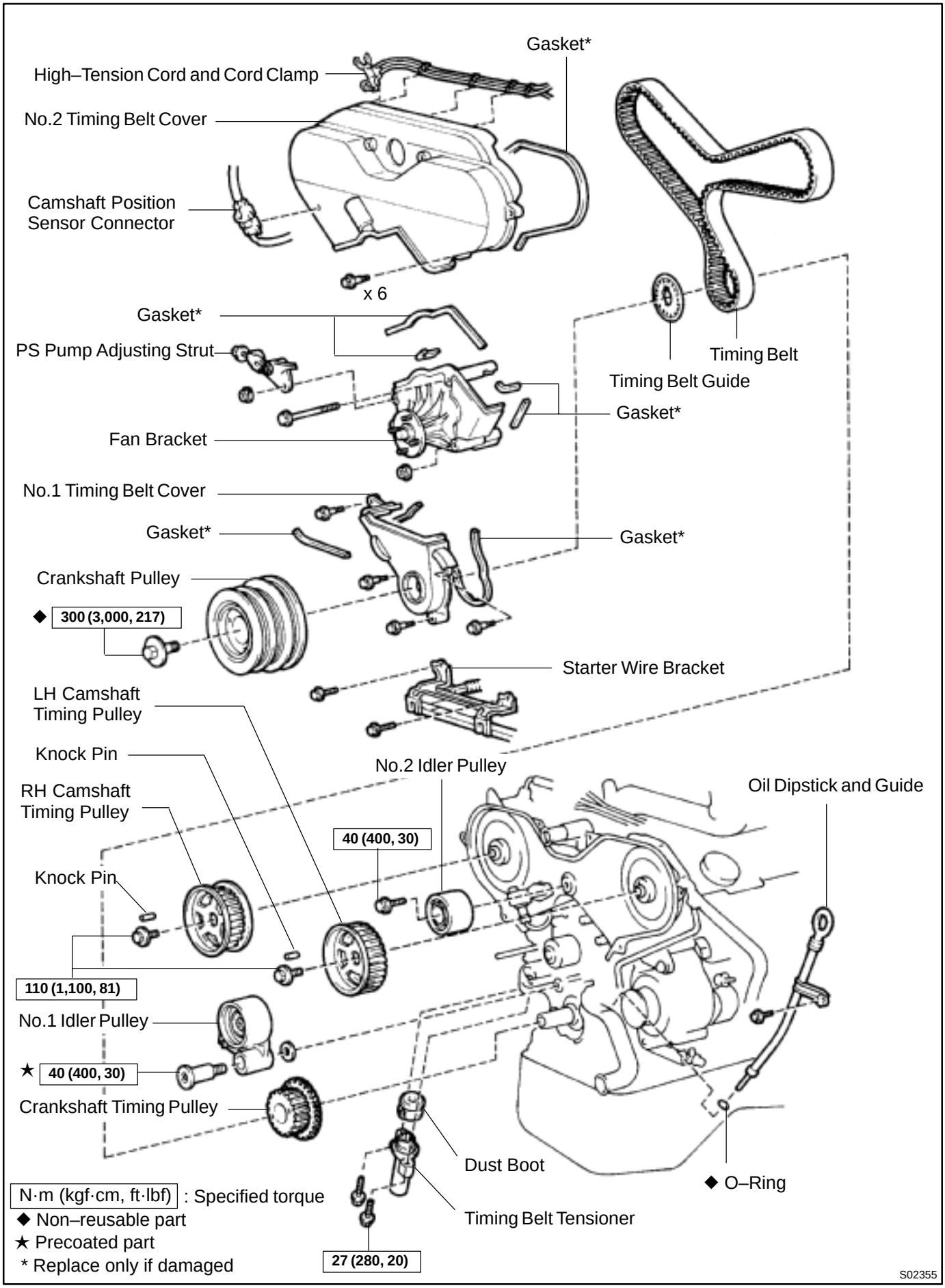
Gasket*
High–Tension Cord and Cord Clamp
No.2 Timing Belt Cover
Camshaft Position Sensor Connector
x 6
Gasket*
PS Pump Adjusting Strut
Timing Belt
Timing Belt Guide
Gasket*
Fan Bracket
No.1 Timing Belt Cover
Gasket*
Gasket*
Crankshaft Pulley
◆ 300 (3,000, 217)
Starter Wire Bracket
LH Camshaft Timing Pulley
Knock Pin
No.2 Idler Pulley
Oil Dipstick and Guide
RH Camshaft Timing Pulley
40 (400, 30)
Knock Pin
110 (1,100, 81)
No.1 Idler Pulley
★ 40 (400, 30)
Crankshaft Timing Pulley
Dust Boot
◆ O–Ring
N·m (kgf·cm, ft·lbf) : Specified torque
◆ Non–reusable part
★ Precoated part
* Replace only if damaged
Timing Belt Tensioner
27 (280, 20)
S02355

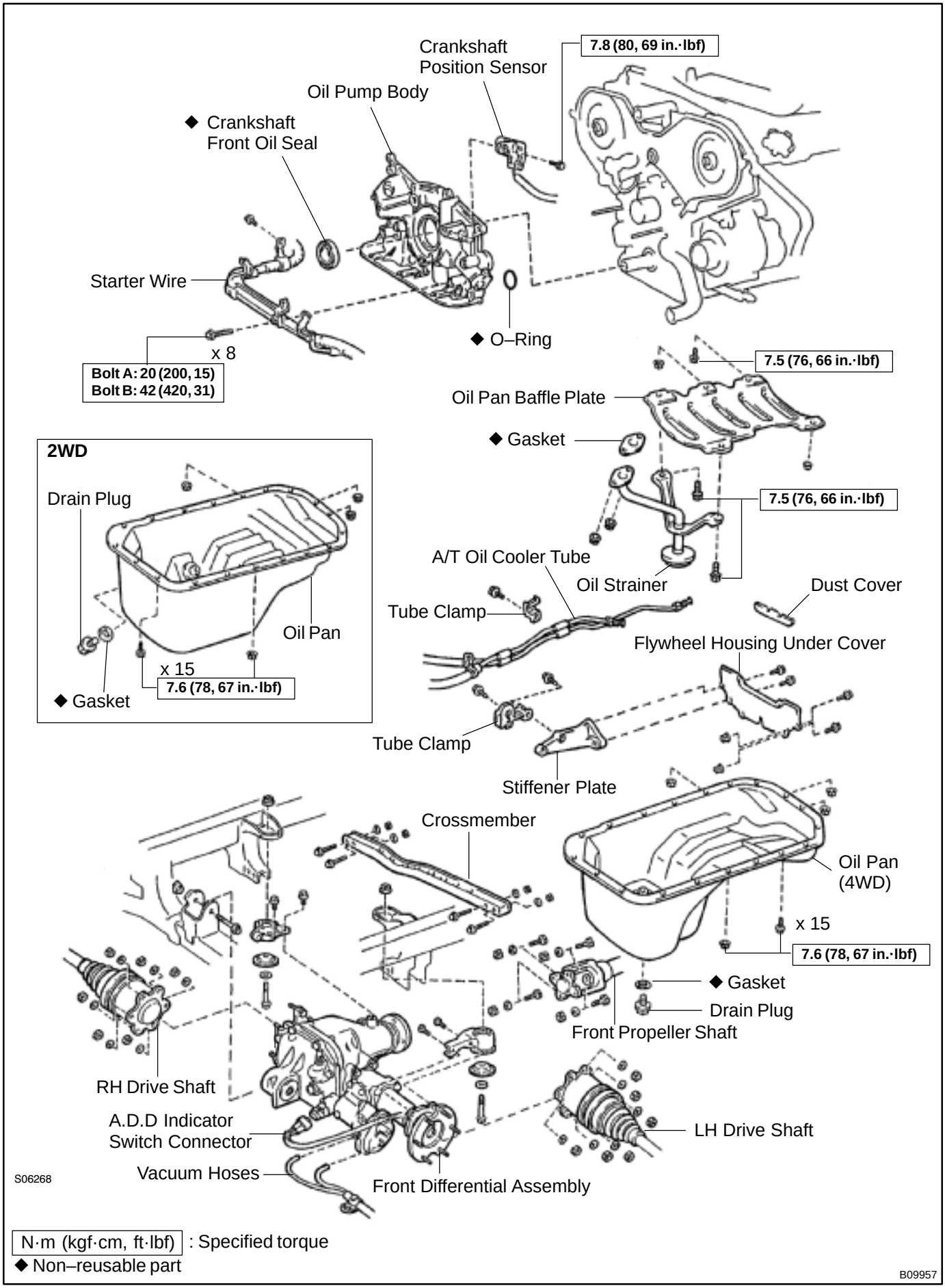
Crankshaft Position Sensor
7.8 (80, 69 in.·lbf)
Oil Pump Body
◆ Crankshaft Front Oil Seal
Starter Wire
x 8
Bolt A: 20 (200, 15)
Bolt B: 42 (420, 31)
◆ O–Ring
7.5 (76, 66 in.·lbf)
Oil Pan Baffle Plate
◆ Gasket
7.5 (76, 66 in.·lbf)
A/T Oil Cooler Tube
Oil Strainer
Dust Cover
Tube Clamp
Flywheel Housing Under Cover
Tube Clamp
Stiffener Plate
2WD
Drain Plug
Oil Pan
x 15
7.6 (78, 67 in.·lbf)
◆ Gasket
Crossmember
Oil Pan (4WD)
x 15
7.6 (78, 67 in.·lbf)
◆ Gasket
Drain Plug
Front Propeller Shaft
RH Drive Shaft
A.D.D Indicator Switch Connector
LH Drive Shaft
Vacuum Hoses
Front Differential Assembly
S06268
N·m (kgf·cm, ft·lbf) : Specified torque
◆ Non–reusable part
B09957

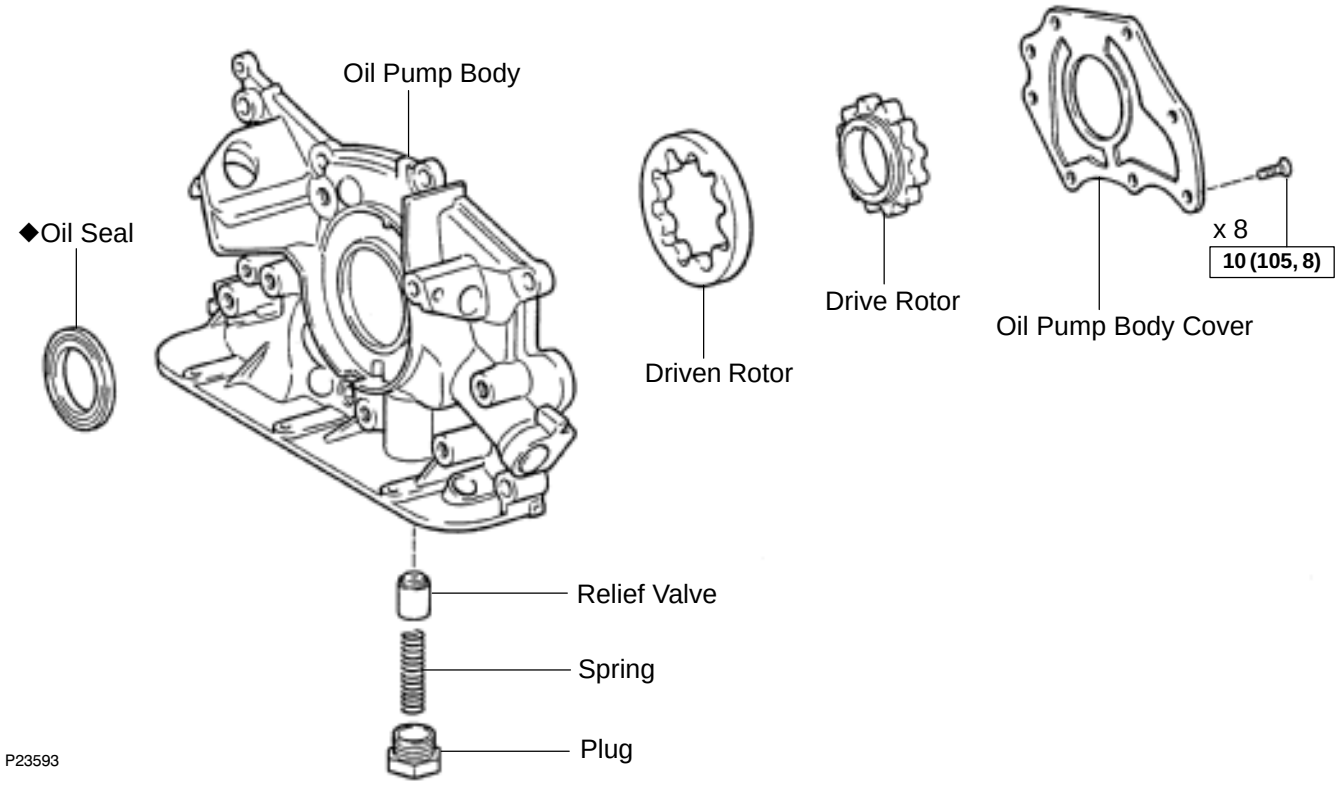

N·m (kgf·cm, ft·lbf) : Specified torque
◆ Non–reusable part

B09958

LU01G–03

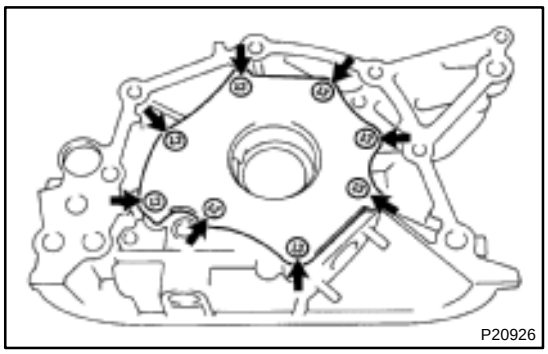

DISASSEMBLY

1. REMOVE DRIVEN AND DRIVE ROTORS

(a) Remove the 8 screws and pump body cover.
Torque: 10 N·m (105 kgf·cm, 8 ft·lbf)

(b) Remove the drive and driven rotors.

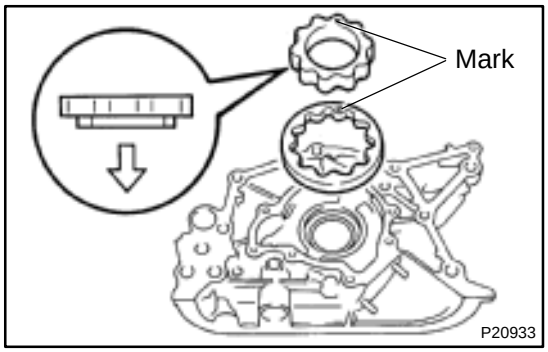

HINT:
At the time of reassembly, please refer to the following items.
Place the drive and driven rotor into pump body with the marks facing the pump body cover side.

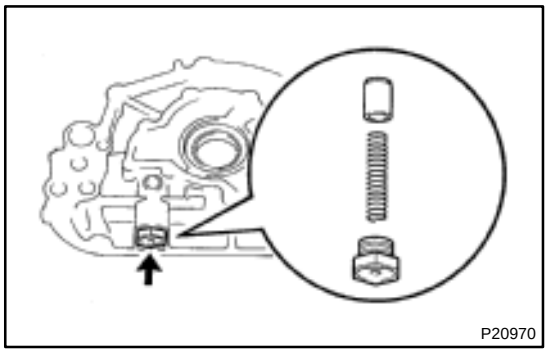

2. REMOVE RELIEF VALVE

Remove the plug, spring and relief valve.

LU01H–03

INSPECTION

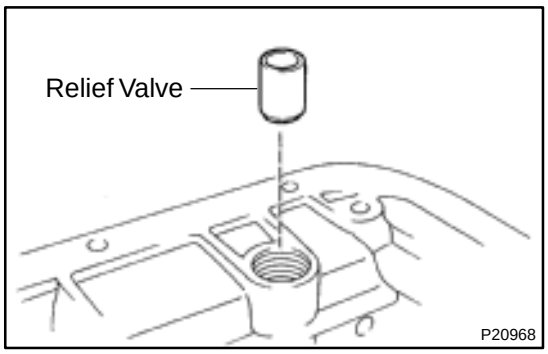

1. INSPECT RELIEF VALVE

Coat the relief valve with engine oil and check that it falls smoothly into the valve hole by its own weight.

If the valve does not fall smoothly, replace the valve and/or oil pump assembly.

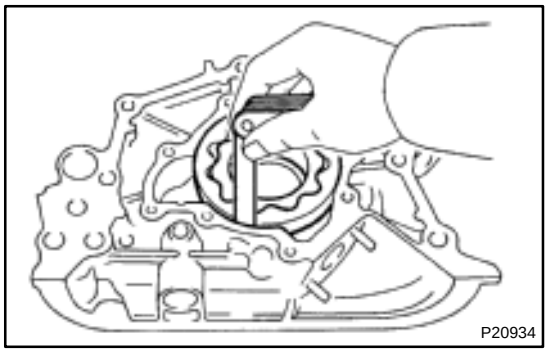

2. INSPECT DRIVE AND DRIVEN ROTORS

(a) Inspect the rotor for body clearance.

Using a feeler gauge, measure the clearance between the driven rotor and pump body.

Standard clearance:
0.10 – 0.18 mm (0.0039 – 0.0069 in.)
Maximum clearance: 0.30 mm (0.0118 in.)

If the clearance is greater than the maximum, replace the oil pump rotor set and/or pump body.

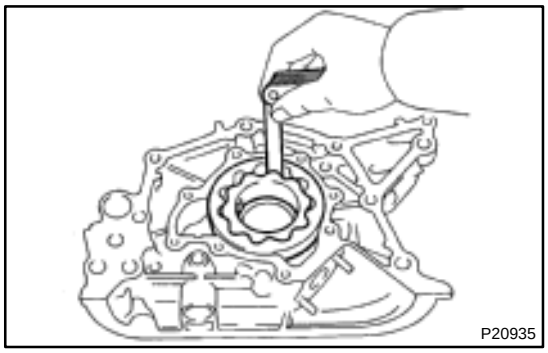

(b) Inspect the rotors for tip clearance.

Using a feeler gauge, measure the clearance between the drive and driven rotors.

Standard clearance:
0.11 – 0.24 mm (0.0043 – 0.0094 in.)
Maximum clearance: 0.35 mm (0.0138 in.)

If the clearance is greater than the maximum, replace the oil pump rotor set.

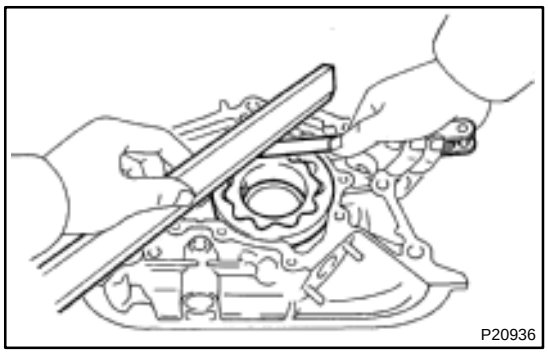

(c) Inspect the rotors for side clearance.

Using a feeler gauge and precision straight edge, measure the side clearance between the rotors and precision straight edge.

Standard clearance:
0.03 – 0.09 mm (0.0012 – 0.0035 in.)
Maximum clearance: 0.15 mm (0.0059 in.)

If the clearance is greater than the maximum, replace the oil pump rotor set and/or pump body.

LU01K–03

INSTALLATION

1. INSTALL OIL PUMP

(a) Remove any old packing (FIPG) material and be careful not to drop any oil on the contact surfaces of the oil pump and cylinder block.

- Using a razor blade and gasket scraper, remove all the old packing (FIPG) material from the gasket surfaces and sealing grooves.
- Thoroughly clean all components to remove all the loose material.
- Using a non–residue solvent, clean both sealing surfaces.

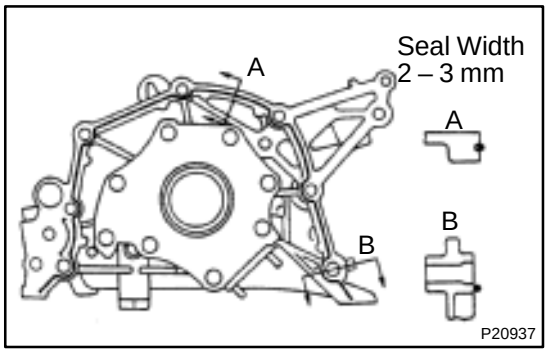

(b) Apply seal packing to the oil pump, as shown in the illustration.

Seal packing: Part No. 08826–00080 or equivalent

- Install nozzle that has been cut out to a 2 – 3 mm (0.08 – 0.12 in.) opening.

HINT:

Avoid applying an excessive amount to the surface.

- Parts must be assembled within 5 minutes of application. Otherwise the material must be removed and reapplied.
- Immediately remove nozzle from the tube and reinstall cap.

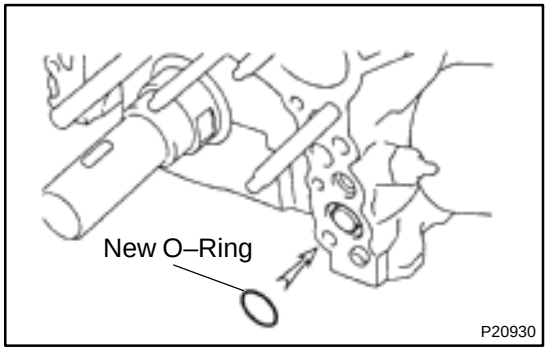

(c) Place a new O–ring into the groove of the cylinder block.

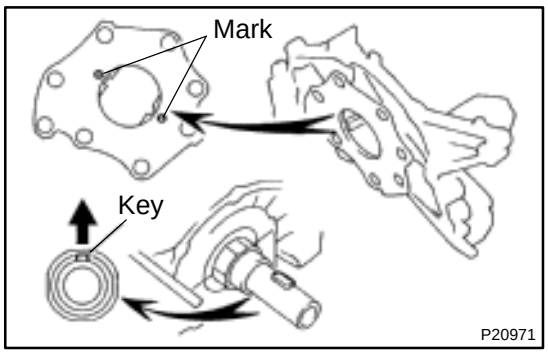

(d) Install the oil pump to the crankshaft with the spline teeth of the drive rotor engaged with the large teeth of the crankshaft.

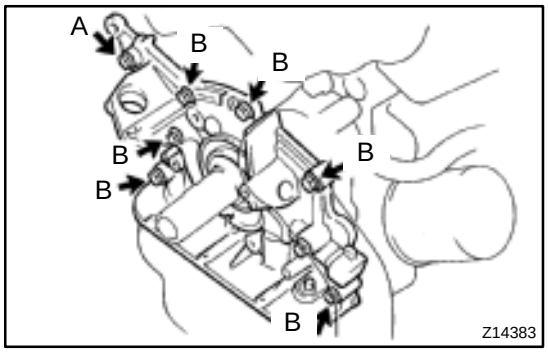

(e) Install the oil pump and ground strap with the 8 bolts.
Torque:
Bolt A: 20 N·m (200 kgf·cm, 15 ft·lbf)
Bolt B: 42 N·m (420 kgf·cm, 31 ft·lbf)

2. INSTALL CRANKSHAFT POSITION SENSOR

3. INSTALL OIL PAN BAFFLE PLATE

Install the baffle plate with the bolt and 2 nuts.
Torque: 7.5 N·m (76 kgf·cm, 66 in.·lbf)

4. INSTALL OIL STRAINER

Install a new gasket and the oil strainer with the 2 bolts and 2 nuts.
Torque: 7.5 N·m (76 kgf·cm, 66 in.·lbf)

5. INSTALL OIL PAN

(a) Remove any old packing (FIPG) material and be careful not to drop any oil on the contacting surfaces of the, oil pan, cylinder block and sealing grooves.
- Using a razor blade and gasket scraper, remove all the remaining seal packing (FIPG) material from the gasket surfaces.
- Thoroughly clean all components to remove all the loose material.
- Clean both sealing surfaces with a non–residue solvent.

NOTICE:
Do not use a solvent which will affect the painted surfaces.

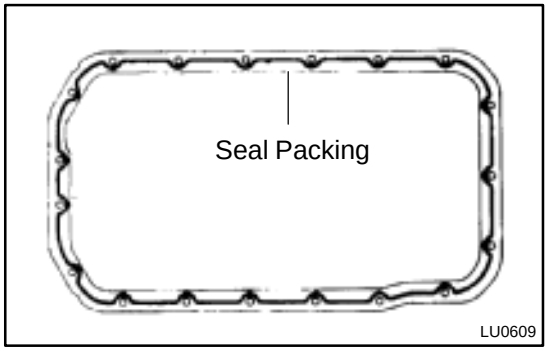

(b) Apply seal packing to the oil pan as shown in the illustration.
Seal packing: Part No. 08826–00080 or equivalent
- Install a nozzle that has been cut to a 3 – 4 mm (0.12 – 0.16 in.) opening.

HINT:
Avoid applying an excess amount to the surface.

- If parts are not assembled within 5 minutes of applying the seal packing, the effectiveness of the seal packing is lost and the seal packing must be removed and reapplied.
- Immediately remove the nozzle from the tube and reinstall the cap after using the seal packing.

(c) Install the oil pan with the 4 nuts and 15 bolts.
Torque: 7.6 N·m (78 kgf·cm, 67 in.·lbf)

6. INSTALL FLYWHEEL HOUSING UNDER, COVER DUST AND STIFFENER PLATE
7. CONNECT STARTER WIRE CLAMP
8. A/T:
INSTALL OIL COOLER TUBE AND CLANP
(A340E: See page AT–29)
(A340F: See page AT–38)
9. INSTALL CRANKSHAFT TIMING PULLEY (See page EM–19)
10. 4WD:
INSTALL FRONT DIFFERENTIAL (See page SA–70)
11. FILL WITH ENGINE OIL
12. START ENGINE AND CHECK FOR LEAKS
13. INSTALL ENGINE UNDER COVER
14. RECHECK ENGINE OIL LEVEL

LU0IQ–01

REASSEMBLY

Reassembly is in the reverse order of disassembly (See page LU–10).

LU01F–03

REMOVAL

HINT:

When repairing the oil pump, the oil pan and strainer should be removed and cleaned.

1. **REMOVE CRANKSHAFT TIMING PULLEY**
   (See page EM–13)
2. **4WD:**
   REMOVE FRONT DIFFERENTIAL
   (See page SA–51)
3. **DRAIN ENGINE OIL**
4. **A/T:**
   REMOVE OIL COOLER TUBE AND CLAMP
   (A340E: See page AT–26)
   (A340F: See page AT–32)
5. **REMOVE REAR END COVER AND DUST COVER**
6. **DISCONNECT STARTER WIRE CLAMP**
7. **REMOVE CRANKSHAFT POSITION SENSOR**

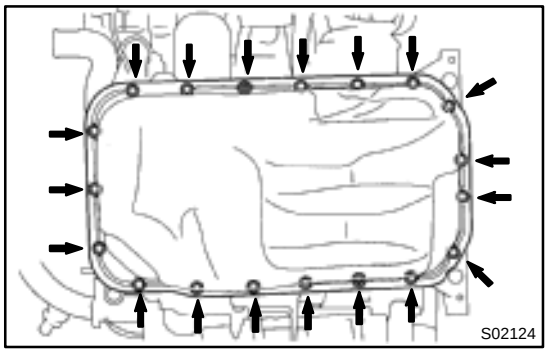

8. REMOVE OIL PAN

(a) Remove the 17 bolts and 2 nuts.

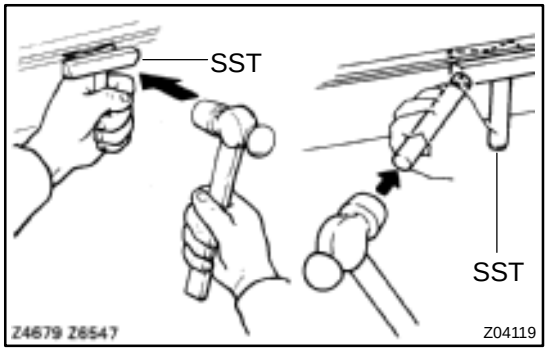

(b) Using SST and a brass bar, separate the oil pan from the cylinder block.
SST 09032–00100

HINT:

When removing the oil pan, be careful not to damage the oil pan flange.

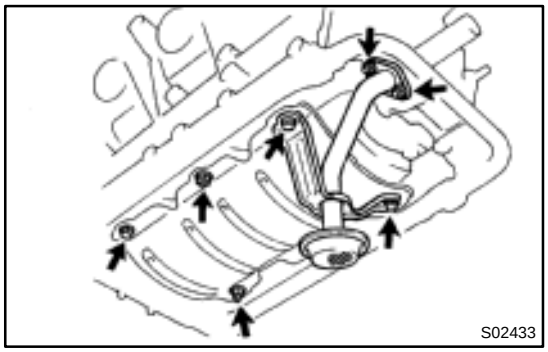

9. REMOVE OIL STRAINER

Remove the 2 bolt, 2 nuts and oil strainer and gasket.

10. REMOVE OIL PAN BAFFLE PLATE.

Remove the bolt, 2 nuts baffle plate.

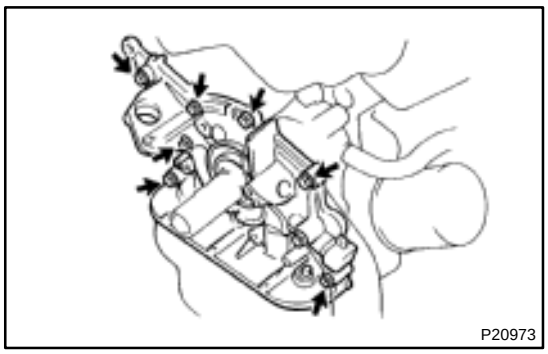

11. REMOVE OIL PUMP

(a) Remove the 8 bolts, ground strap and oil pump.

(b) Using a plastic–faced hammer, carefully tap out the oil pump body.

(c) Remove the O–ring from the cylinder block.

LU01I–04

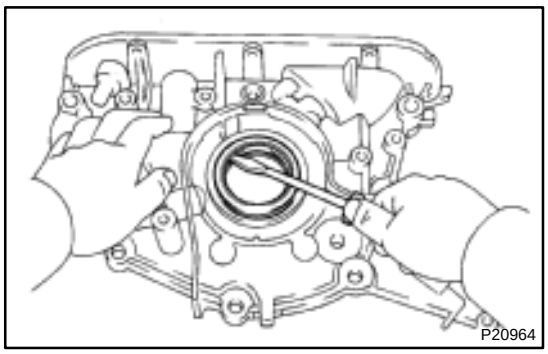

REPLACEMENT

REPLACE CRANKSHAFT FRONT OIL SEAL

HINT:

There are 2 methods ((a) and (b)) to replace the oil seal.

(a) If oil pump is removed from cylinder block:

(1) Using a screwdriver, pry out the oil seal.

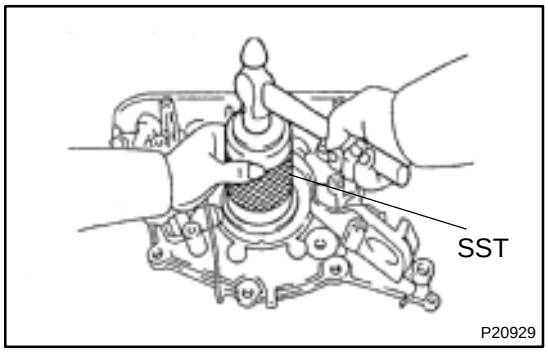

(2) Using SST and a hammer, tap in a new oil seal until its surface is flush with the oil pump body edge.

SST 09309–37010

(3) Apply MP grease to the oil seal lip.

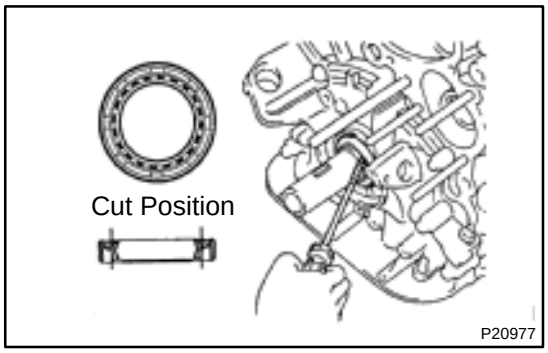

(b) If oil pump is installed to the cylinder block:

(1) Using a knife, cut off the oil seal lip.

(2) Using a screwdriver, pry out the oil seal.

NOTICE:

Be careful not to damage the crankshaft. Tape the screwdriver tip.

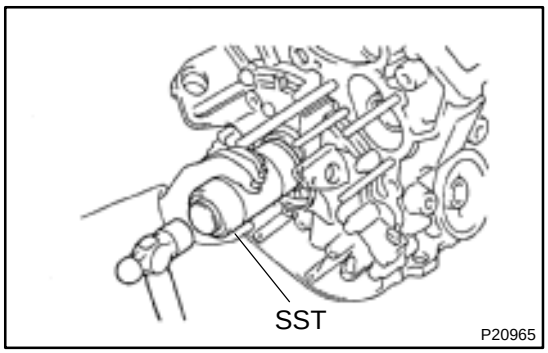

(3) Apply MP grease to a new oil seal lip.

(4) Using SST and a hammer, tap in the oil seal until its surface is flush with the oil pump body edge.

SST 09306–37010

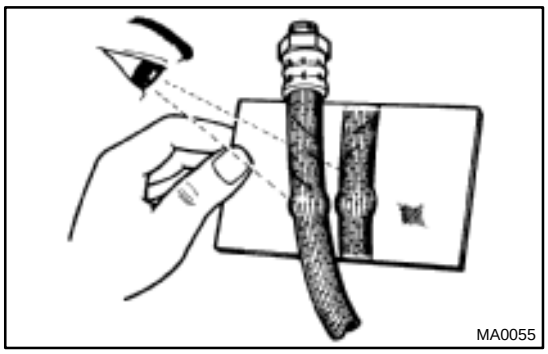
MA0055

BRAKE

MA00C–02

INSPECTION

1. INSPECT BRAKE LINE PIPES AND HOSES

HINT:

Inspect in a well–lighted area. Inspect the entire circumference and length of the brake hoses using a mirror as required. Turn the front wheels fully right or left before inspecting the front brake.

(a) Check the all brake lines and hoses for the Damage.
(b) Check the all brake lines and hoses for the Wear.
(c) Check the all brake lines and hoses for the Deformation.
(d) Check the all brake lines and hoses for the Cracks.
(e) Check the all brake lines and hoses for the Corrosion.
(f) Check the all brake lines and hoses for the Leaks.
(g) Check the all brake lines and hoses for the Bends.
(h) Check the all brake lines and hoses for the Twists.
(i) Check all clamps for tightness and connections for leakage.
(j) Check that the hoses and lines are clear of sharp edges, moving parts and the exhaust system
(k) Check that the lines installed in grommets pass through the center of the grommets.

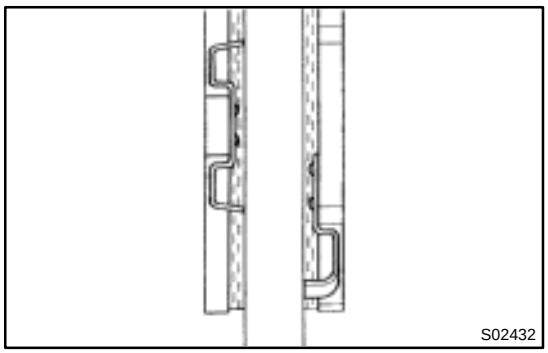
S02432

2. INSPECT FRONT BRAKE PADS AND DISCS (See page BR–21 and BR–24)

HINT:

If a squealing or scraping noise occurs from the brake during driving, check the pad wear indicator.

If there are traces of the indicator contacting the disc rotor, the disc pad should be replaced.

3. INSPECT REAR BRAKE LININGS AND DRUMS (See page BR–40 and BR–46)

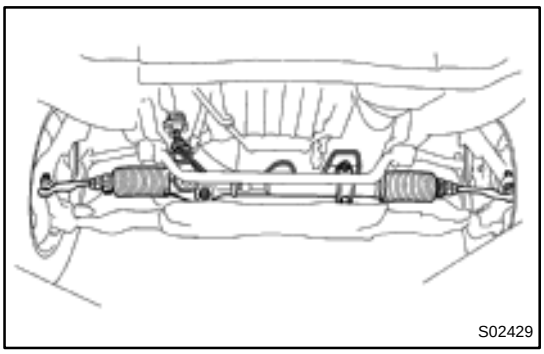
S02429

CHASSIS

MA00D–02

INSPECTION

1. INSPECT STEERING LINKAGE

(a) Check the steering wheel freeplay (See page SR–9).

(b) Check the steering linkage for loosenness or damage.
Check that:
- Tie rod ends do not have excessive play.
- Dust seals and boots are not damaged.
- Boot clamps are not loose.

2. INSPECT STEERING WHEEL PAD AND SPIRAL CABLE (See page RS–13)

3. INSPECT FRONT PASSENGER AIRBAG ASSEMBLY (See page RS–27)

4. INSPECT AIRBAG SENSOR ASSEMBLY (See page RS–40)

5. NSPECT WIRE HARNESS AND CONNECTOR (See page RS–50)

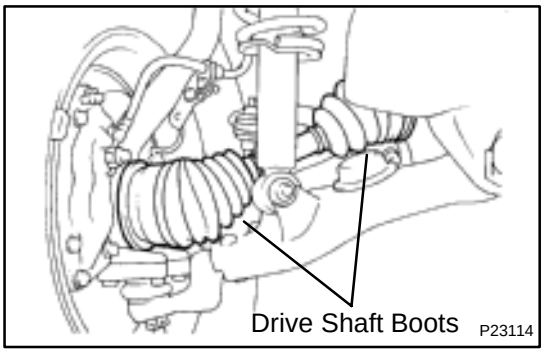

P23114

6. INSPECT STEERING GEAR HOUSING

Check the steering gear housing for oil leaks.
If leakage is found, check for cause and repair.

7. 4WD:
INSPECT DRIVE SHAFT BOOTS

Inspect the drive shaft boots for clamp looseness, grease leakage or damage.

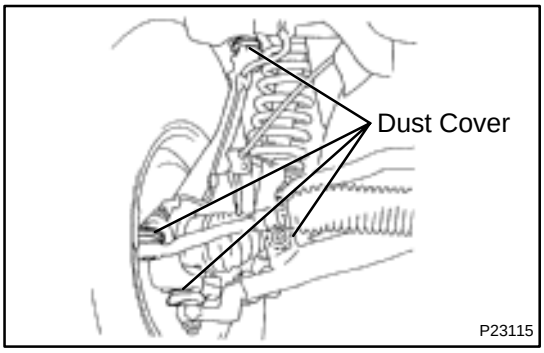

P23115

8. INSPECT BALL JOINTS AND DUST COVERS

(a) Inspect the ball joints for excessive looseness (See page SA–3).

(b) Inspect the dust cover for damage.

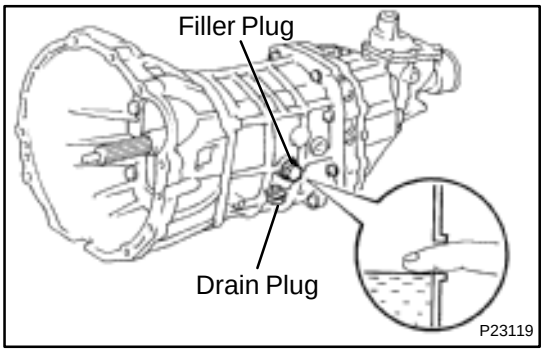

P23119

9. 2WD:
CHECK OIL LEVEL IN MANUAL TRANSMISSION, AUTOMATIC TRANSMISSION AND DIFFERENTIAL

(a) Manual transmission:
Remove the filler plug and feel inside the hole with your finger. Check that the oil comes to within 5 mm (0.20 in.) of the bottom edge of the hole. If the level is low, add oil until it begins to run out of the filler hole.
W59 Transmission oil (M/T): See page MT–4

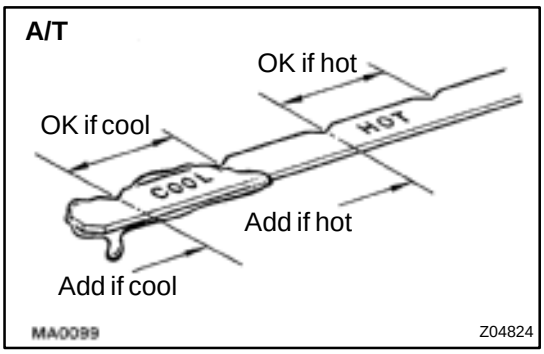

(b) Automatic transmission:
Check that the fluid level is in the ”HOT” range at the normal operating temperature (70 – 80˚C or 158 – 176˚F) and add as necessary.

NOTICE:

Do not overfill.

A43D Transmission fluid (A/T): See page AT–1

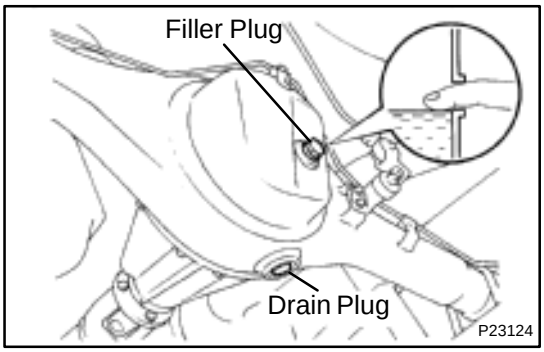

(c) Differential:
Remove the filler plug and feel inside the hole with your finger. Check that the oil comes to within 5 mm (0.20 in.) of the bottom edge of the hole. If the level is low, add oil until it begins to run out of the filler hole.

Differential oil: See page SA–49

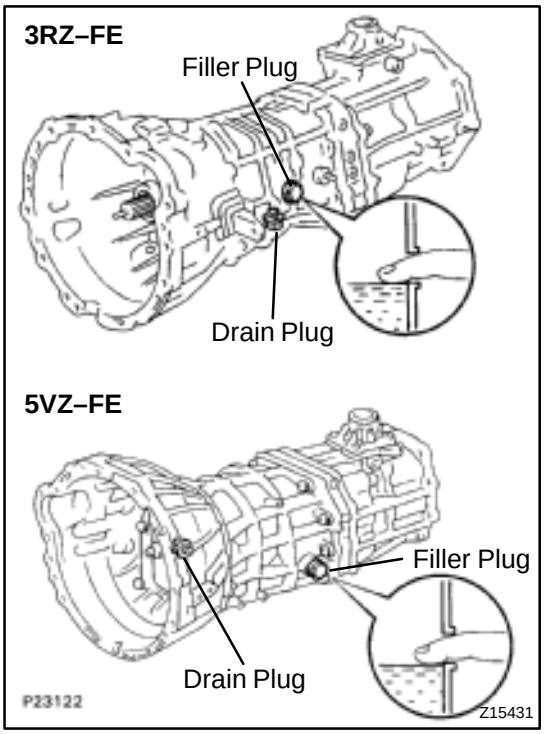

10. 4WD:

CHECK OIL LEVEL IN MANUAL TRANSMISSION, AUTOMATIC TRANSMISSION, TRANSFER AND DIFFERENTIAL

(a) Manual transmission:
Remove the filler plug and feel inside the hole with your finger. Check that the oil comes to within 5 mm (0.20 in.) of the bottom edge of the hole. If the level is low, add oil until it begins to run out of the filler hole.

W59 Transmission oil (M/T): See page MT–1

R150F Transmission oil (M/T): See page MT–7

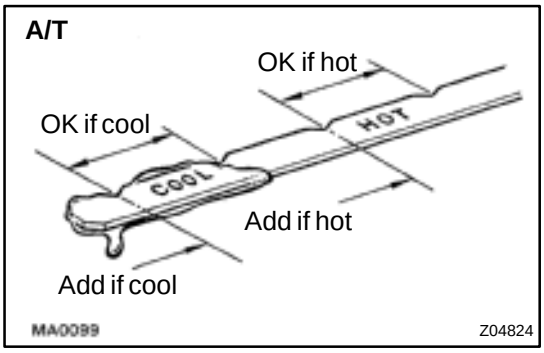

(b) Automatic transmission:
Check that the fluid level is in the ”HOT” range at the normal operating temperature (70 – 80˚C or 158 – 176˚F) and add as necessary.

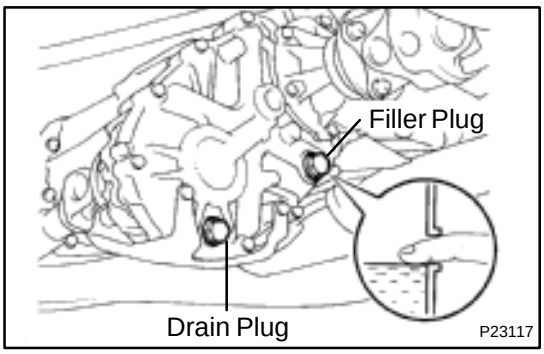

(c) Transfer:
Remove the filler plug and feel inside the hole with your finger. Check that the oil comes to within 5 mm (0.20 in.) of the bottom edge of the hole. If the level is low, add oil until it begins to run out of the filler hole.
Transfer oil: See page TR–1

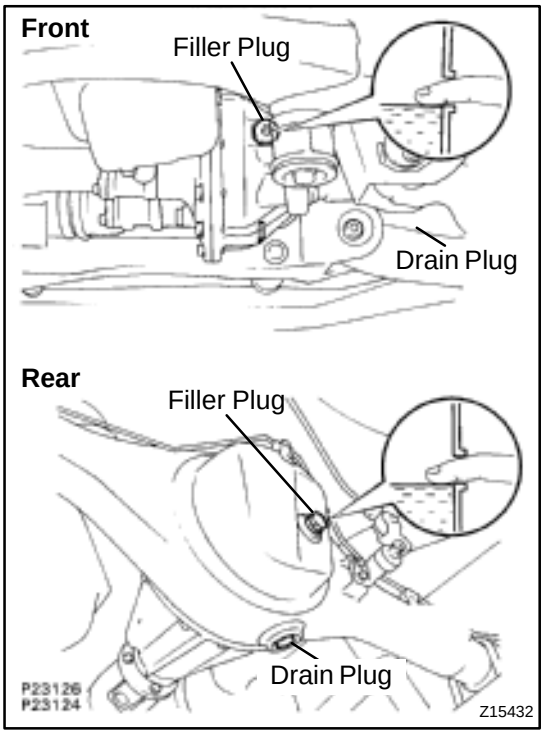

(d) Differential:
Remove the filler plug and feel inside the hole with your finger. Check that the oil comes to within 5 mm (0.20 in.) of the bottom edge of the hole. If the level is low, add oil until it begins to run out of the filler hole.
Front differential: See page SA–57
Rear differential oil: See page SA–144

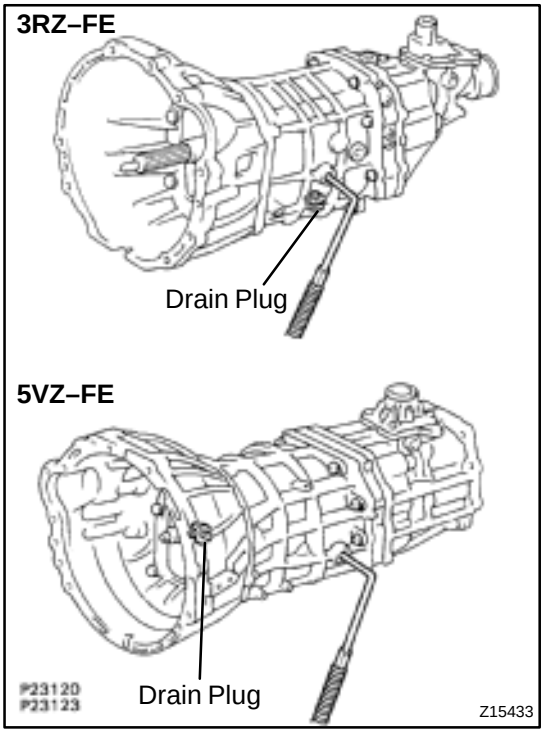

11. REPLACE MANUAL TRANSMISSION, TRANSFER (4WD) AND DEFFERENTIAL OIL

(a) Transfer:
Remove the transfer cover.

(b) Remove the drain plug and drain the oil.

(c) Reinstall drain plug securely.

(d) Add new oil until it begins to run out of the filler hole.
W59 (2WD) Transmission oil (M/T): See page MT–4
W59 (4WD) Transmission oil (M/T): See page MT–8
R150F Transmission oil (M/T): See page MT–8

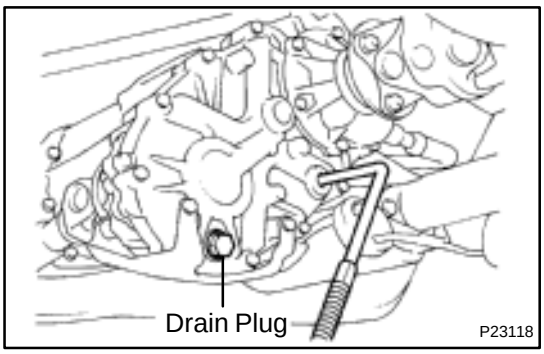

Transfer oil: See page TR–6

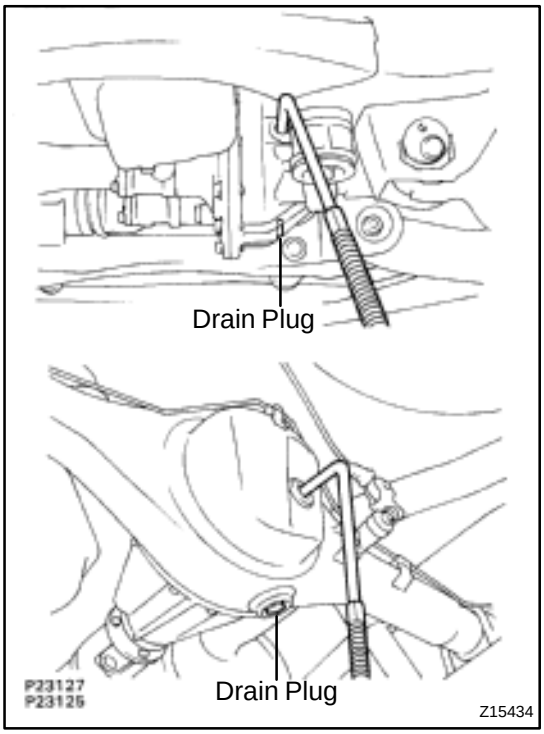

Front differential: See page SA–15
Rear differential oil: See page SA–146

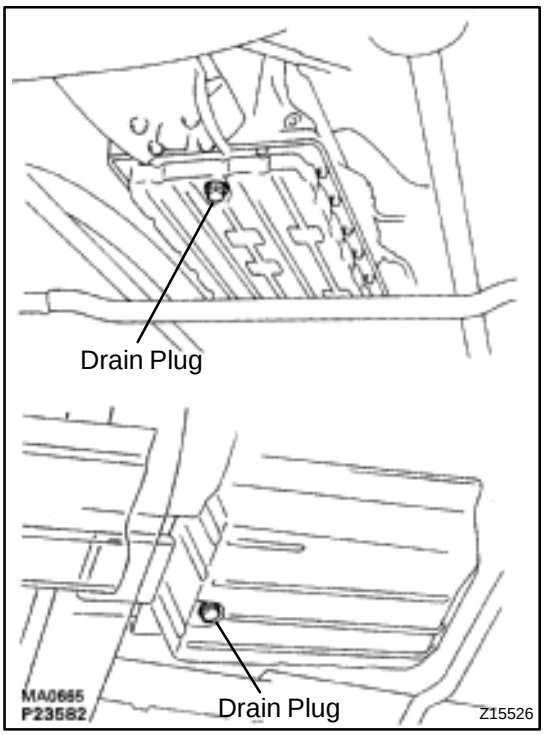

12. REPLACE AUTOMATIC TRANSMISSION FLUID

(a) Remove the drain plug(s) and drain the fluid.

(b) Reinstall the drain plug(s) securely.

(c) With the engine OFF, add new fluid through the oil filler pipe.

A340E, A340F Transmission fluid (A/T): See page DI–342

(d) Start the engine and shift the selector into all positions from ”P” through ”L” and then shift into ”P”.

(e) With the engine idling, check the fluid level.
Add fluid up to the ”COOL” level on the dipstick.

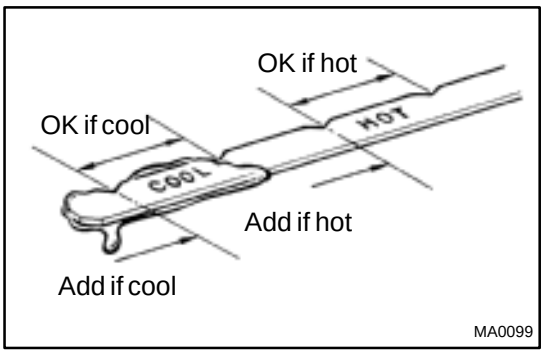

(f) Check that the fluid level is in the "HOT" range at the normal operating temperature (70 – 80˚C or 158 – 176˚F) and add as necessary.

NOTICE:

Do not overfill.

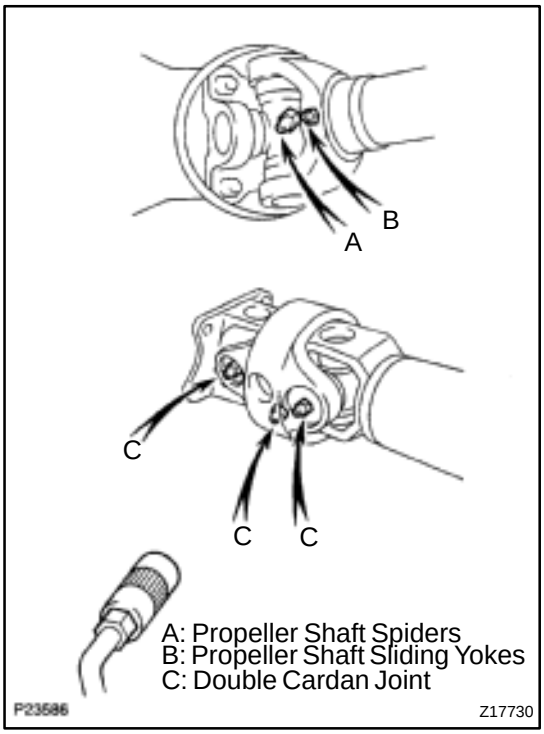

13. 4WD:
LUBRICATE PROPELLER SHAFT

Lubricate propeller shaft, referring to the lubrication chart. Before pumping in grease, wipe off any mud and dust on the grease fitting.

Grease grade:

Spiders: Lithium base chassis grease NLGI No.2

Slide yoke and double–cardan joint:

Molybdenum–disulphidelithium base chassis grease NLGI No.2

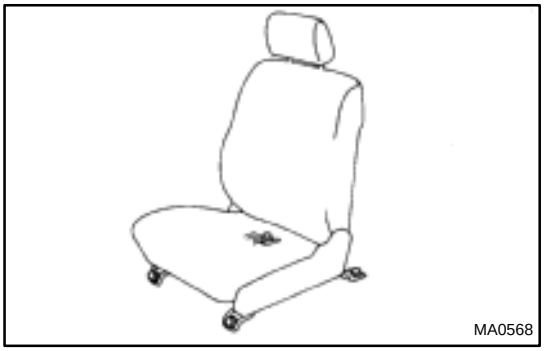

14. TIGHTEN BOLTS AND NUTS ON CHASSIS AND BODY

- Tighten these parts:
  Seat mounting bolts
  Torque: 37 N·m (375 kgf·cm, 27 ft·lbf)
- Under Severe Conditions:
  In addition to the above maintenance items, check for loose or missing bolts and nuts on the following.
  - Steering system
  - Drive train
  - Suspension system
  - Fuel tank mounts
  - Engine mounts, etc.

15. FINAL INSPECTION

(a) Check operation of body parts:
- Hood:
  - Auxiliary catch operates properly
  - Hood locks securely when closed
- Doors:
  - Door locks operate properly
  - Doors close properly
- Seats:
  - Seat adjusts easily and locks securely in any positions
  - Seat backs lock securely at any angle
  - Fold–down seat backs lock securely

(b) Road test:
- Engine and chassis parts do not have abnormal noises.
- Vehicle does not wander or pull to one side.
- Brakes work properly and do not drag.

(c) Be sure to deliver a clean vehicle and especially check:
- Steering wheel
- Shift lever knob
- All switch knobs
- Door handles
- Seats

ENGINE

MA00B–03

INSPECTION

HINT:

Inspect these items when the engine is cold.

1. 5VZ–FE ENGINE:
REPLACE TIMING BELT (See page EM–17)

2. INSPECT DRIVE BELTS
(2RZ–FE, 3RZ–FE: See page EM–40)
(5VZ–FE: See page EM–13)

3. REPLACE SPARK PLUGS
(2RZ–FE, 3RZ–FE: See page IG–1)
(5VZ–FE: See page IG–1)

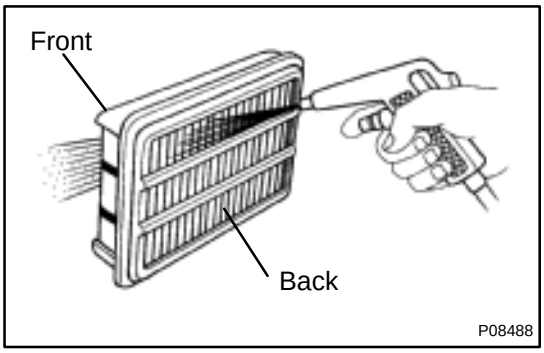

4. INSPECT AIR FILTER

(a) Visually check that the air cleaner element is not excessively dirty, damaged or oily.

HINT:

Oiliness may indicate a stuck PCV valve.

If necessary, replace the air cleaner element.

(b) Clean the element with compressed air.
First blow from back side thoroughly, then blow off the front side of the element.

5. REPLACE AIR FILTER

Replace the used air cleaner element with a new one.

6. REPLACE ENGINE OIL AND OIL FILTER
(2RZ–FE, 3RZ–FE: See page LU–2)
(5VZ–FE: See page LU–2)

7. REPLACE ENGINE COOLANT
(2RZ–FE, 3RZ–FE: See page CO–2)
(5VZ–FE: See page CO–2)

8. INSPECT CHARCOAL CANISTER
(2RZ–FE, 3RZ–FE: See page EC–8)
(5VZ–FE: See page EC–5)

9. REPLACE GASKET IN FUEL TANK CAP
(2RZ–FE, 3RZ–FE: See page SF–24)
(5VZ–FE: See page SF–25)

10. INSPECT FUEL LINES AND CONNECTIONS
(2RZ–FE, 3RZ–FE: See page SF–24)
(5VZ–FE: See page SF–25)

11. INSPECT EXHAUST PIPES AND MOUNTINGS
(2RZ–FE, 3RZ–FE: See page EM–117)
(5VZ–FE: See page EM–107)

12. REPLACE A/F SENSOR (California Spec.)
(2RZ–FE, 3RZ–FE: See page SF–50)
(5VZ–FE: See page SF–52)

13. REPLACE HEATED OXYGEN SENSOR
(2RZ–FE, 3RZ–FE: See page SF–54)
(5VZ–FE: See page SF–54)

INSIDE VEHICLE

MA009–02

GENERAL MAINTENANCE

These are maintenance and inspection items which are considered to be the owner's responsibility. They can be done by the owner or they can have them done at a service shop.
These items include those which should be checked on a daily basis, those which, in most cases, do not require (special) tools and those which are considered to be reasonable for the owner to do.
Items and procedures for general maintenance are as follows.

1. GENERAL NOTES

- Maintenance items may vary from country to country. Check the owner's manual supplement in which the maintenance schedule is shown.
- Every serice item in the periodic maintenance schedule must be performed.
- Periodic maintenance service must be performed according to whichever interval in the periodic maintenance schedule occurs first, the odometer reading (miles) or the time interval (months).
- Maintenance service after the last period should be performed at the same interval as before unless otherwise noted.
- Failure to do even one item an cause the engine to run poorly and increase exhaust emissions.

2.

(a) Check that the headlights, stop lights, taillights, turn signal lights, and other lights are all working.
(b) Check the headlight aim.

3. WARNING LIGHTS AND BUZZERS

Check that all warning lights and buzzers function properly.

4. HORN

Check that it is working.

5. WINDSHIELD GLASS

Check for scratches, pits or abrasions.

6. WINDSHIELD WIPER AND WASHER

(a) Check operation of the wipers and washer.
(b) Check that the wipers do not streak.

7. WINDSHIELD DEFROSTER

Check that air comes out from the defroster outlet when operating the heater or air conditioner.

8. REAR VIEW MIRROR

Check that it is mounted securely.

9. SUN VISORS

Check that they move freely and are mounted securely.

10. STEERING WHEEL

Check that it has the specified freeplay. Be alert for changes in steering condition, such as hard steering, excessive freeplay or strange noises.

11. SEATS

(a) Check that the seat adjusters operate smoothly.
(b) Check that all latches lock securely in any position.
(c) Check that the head restraints move up and down smoothly and that the locks hold securely in any latch position.
(d) For fold–down seat backs, check that the latches lock securely.

12. SEAT BELTS

(a) Check that the seat belt system such as the buckles, retractors and anchors operate properly and smoothly.
(b) Check that the belt webbing is not cut, frayed, worn or dameged.

13. ACCELERATOR PEDAL

Check the pedal for smooth operation and uneven pedal effort or catching.

14. CLUTCH PEDAL (See page CL–2)

(a) Check the pedal for smooth operation.

(b) Check that the pedal has the proper freeplay.

15. BRAKE PEDAL

(a) Check the pedal for smooth operation.

(b) Check that the pedal has the proper reserve distance and freeplay.

(c) Check the brake booster function.

16. BRAKES

At a safe place, check that the brakes do not pull to one side when applied.

17. PARKING BRAKE

(a) Check that the lever has the proper travel.

(b) On a safe incline, check that the vehicle is held securely with only the parking brake applied.

18. AUTOMATIC TRANSMISSION ”PARK” MECHANISM

(a) Check the lock release button of the selector lever for proper and smooth operation.

(b) On a safe incline, check that the vehicle is held securely with the selector lever in ”P” position and all brakes released.

OUTSIDE VEHICLE

MA008–01

GENERAL MAINTENANCE

These are maintenance and inspection items which are considered to be the owner's responsibility. They can be done by the owner or they can have them done at a service shop.
These items include those which should be checked on a daily basis, those which, in most cases, do not require (special) tools and those which are considered to be reasonable for the owner to do.
Items and procedures for general maintenance are as follows.

1. GENERAL NOTES

- Maintenance items may vary from country to country. Check the owner's manual supplement in which the maintenance schedule is shown.
- Every serice item in the periodic maintenance schedule must be performed.
- Periodic maintenance service must be performed according to whichever interval in the periodic maintenance schedule occurs first, the odometer reading (miles) or the time interval (months).
- Maintenance service after the last period should be performed at the same interval as before unless otherwise noted.
- Failure to do even one item an cause the engine to run poorly and increase exhaust emissions.

2. TIRES

(a) Check the pressure with a gauge. If necessary, adjust.
(b) Check for cuts, damage or excessive wear.

3. WHEEL NUTS

When checking the tires, check the nuts for looseness or for missing nuts. If necessary, tighten them.

4. TIRE ROTATION

It is recommended that the tires be rotated every 6,200 miles (10,000 km).

5. WINDSHIELD WIPER BLADES

Check for wear or cracks whenever they do not wipe clean. If necessary, replace.

6. FLUID LEAKS

(a) Check underneath for leaking fuel, oil, water or other fluid.
(b) If you smell gasoline fumes or notice any leak, have the cause found and corrected.

7. DOORS AND ENGINE HOOD

(a) Check that all doors and the tailgate operate smoothly, and that all latches lock securely.
(b) Check that the engine hood secondary latch secures the hood from opening when the primary latch is released.

UNDER HOOD

MA00A–01

GENERAL MAINTENANCE

1. GENERAL NOTES

- Maintenance items may vary from country to country. Check the owner's manual supplement in which the maintenance schedule is shown.
- Every serice item in the periodic maintenance schedule must be performed.
- Periodic maintenance service must be performed according to whichever interval in the periodic maintenance schedule occurs first, the odometer reading (miles) or the time interval (months).
- Maintenance service after the last period should be performed at the same interval as before unless otherwise noted.
- Failure to do even one item an cause the engine to run poorly and increase exhaust emissions.

2. WINDSHIELD WASHER FLUID

Check that there is sufficient fluid in the tank.

3. ENGINE COOLANT LEVEL

Check that the coolant level is between the "FULL" and "LOW" lines on the see–through reservoir.

4. RADIATOR AND HOSES

(a) Check that the front of the radiator is clean and not blocked with leaves, dirt or bugs.
(b) Check the hoses for cracks, kinks, rot or loose connections.

5. BATTERY ELECTROLYTE LEVEL

Check that the electrolyte level of all battery cells is between the upper and lower level lines on the case.

6. BRAKE AND CLUTCH FLUID LEVELS

Check that the brake and clutch fluid levels are near the upper level line on the see–through reservoirs.

7. ENGINE DRIVE BELTS

Check all drive belts for fraying, cracks, wear or oiliness.

8. ENGINE OIL LEVEL

Check the level on the dipstick with the engine turned off.

9. POWER STEERING FLUID LEVEL

- Check the level on the dipstick.
- The level should be in the "HOT" or "COLD"range depending on the fluid temperature.

10. AUTOMATIC TRANSMISSION FLUID LEVEL

(a) Park the vehicle on a level surface.
(b) With the engine idling and the parking brake applied, shift the selector into all positions from "P" to "L", and then shift into "P" position.
(c) Pull out the dipstick and wipe off the fluid with a clean rag. Re–insert the dipstick and check that the fluid level is in the HOT range.
(d) Do this check with the fluid at normal driving temperature (70 – 80˚C, 158 – 176˚F).

HINT:

Wait until the engine cools down (approx. 30 min.) before checking the fluid level after extended driving at high speeds, in hot weather, in heavy traffic or pulling a trailer.

11. EXHAUST SYSTEM

If any change in the sound of the exhaust or smell of the exhaust fumes is noticed, have the cause located and corrected.

PP01K–01

COOLANT

Item	Capacity	Classification
w/ Rear heater	9.0 liters (9.5 US qts, 7.9 lmp. qts)	Ethylene–glycol base
w/o Rear heater	8.0 liters (8.5 US qts, 7.0 lmp. qts)	

PP0A9–01

EQUIPMENT

OBDII scan tool	
Ohmmeter	
Voltmeter	
Torque wrench	
Dial indicator with magnetic base	Drive plate
Vernier calipers	Torque converter clutch
Straight edge	Torque converter clutch

PP09F–01

EQUIPMENT

OBDII scan tool	
Torque wrench	
Dial indicator with magnetic base	Check drive plate runout
Vernier calipers	Check torque converter clutch installation
Straignt edge	Check torque converter clutch installation

PP0AI–01

EQUIPMENT

Dial indecator	
Torque wrench	

PP09K–02

EQUIPMENT

Belt tension gauge	Drive belt
Caliper gauge	PS vane pump (2RZ–FE, 3RZ–FE, 5VZ–FE)
Calipers	PS vane pump (2RZ–FE, 3RZ–FE, 5VZ–FE)
Dial indicator	Manual steering gear, PS gear (2WD, 4WD and Pre runner)
Feeler gauge	PS vane pump (2RZ–FE, 3RZ–FE, 5VZ–FE)
Micrometer	PS vane pump (2RZ–FE, 3RZ–FE, 5VZ–FE)
Torque wrench	

PP091–01

EQUIPMENT

Voltmeter	
Ammeter	
Ohmmeter	
Test lead	
Thermometer	Engine coolant temperature sender gauge
Syphon	Brake fluid level warning switch
Oil bath	Engine oil level warning switch
Bulb (3.4 W)	Fuel sender gauge, Integration relay
Bulb (21 W)	Turn signal flasher relay
Dry cell battery	Fuel sender gauge, Power mirror
Torque wrench	
Clip remover	For removing cowl louver

MAINTENANCE

EQUIPMENT

PP00Y–01

Mirror	Brake hose
Torque wrench	

PP018–01

EQUIPMENT

Caliper gauge	
CO/HC meter	
Compression gauge	
Connecting rod aligner	
Cylinder gauge	
Dial indicator	
Dye penetrant	
Timing light	Ignition timing
OBDII scan tool	Engine speed
Heater	
Magnetic finger	
Micrometer	
Piston ring compressor	
Piston ring expander	
Plastigage	
Precision straight edge	
Soft brush	
Spring tester	Valve spring
Steel square	Valve spring
Thermometer	
Torque wrench	
Valve seat cutter	
Vernier calipers	

PP015–04

EQUIPMENT

Hose Clipper	
OBDII scan tool	Engine speed
Torque wrench	
Vacuum Gauge	

PP01F–01

EQUIPMENT

OBDII scan tool	Engine speed
Graduated cylinder	Injector
Carburetor cleaner	Throttle body
Sound scope	Injector
Torque wrench	
Soft brush	Throttle body

PP01J–01

EQUIPMENT

Heater	
Radiator cap tester	
Thermometer	
Torque wrench	

PP01T–01

EQUIPMENT

Oil pressure gauge	
Precision straight edge	Oil pump
Torque wrench	

PP020–01

EQUIPMENT

Megger insulation resistance meter	Spark plug
Spark plug cleaner	

PP026–01

EQUIPMENT

Dial indicator	Commutator
Magnetic finger	Steel ball
Press	Magnetic switch terminal kit
Pull scale	Brush spring
Sandpaper	Commutator
Torque wrench	
V–block	Commutator
Vernier calipers	Commutator, Brush

PP02C–01

EQUIPMENT

Battery specific gravity gauge	Battery
Belt tension gauge	
Torque wrench	
Vernier calipers	Rotor (Slip ring)

PP09Y–01

EQUIPMENT

Calipers	
Torque wrench	
Dial indicator with magnetic base	

PP0AE–01

EQUIPMENT

Calipers	
Dial indicator	
Micrometer	
Torque wrench	
Feeler gauge	

PP09A–01

EQUIPMENT

Dial indicator or dial indicator with magnetic base	
Torque wrench	
Spring tension gauge	
Micrometer	
Voltmeter	
Ohmmeter	

PP09P–03

EQUIPMENT

Torque wrench	
Micrometer	Brake disc
Dial indicator	Brake disc
Brake drum gauge	Brake drum
Vernier calipers	Brake drum

PP03F–02

EQUIPMENT

Torque wrench	
Bolt: Length: 35 mm (1.38 in.) Pitch: 1.0 mm (0.039 in.) Diam.: 6.0 mm (0.236 in.)	Airbag disposal
Tire Width: 185 mm (7.28 in.) Inner diam.: 360mm (14.17 in.)	Airbag disposal
Tire with disc wheel Width: 185 mm (7.28 in.) Inner diam.: 360 mm (14.17 in.)	Airbag disposa
Vinyl bag	Airbag disposal

PP0MV–03

EQUIPMENT

Clip remover	
Torque wrench	
Torx driver	
Hog ring pliers	
Tape	To avoid surface damage
Adhesive tape	To avoid surface damage
Double – stick tape	
Adhesive	
Cleaner	
Shop rag	Regulator handle
Knife	Moulding
Heat light	Moulding
Piano wire	Windshield
Sealer gun	
Brush	
Putty spatula	
Wooden block or similar object	For tying both piano wire ends
Plastic sheet	To avoid surface damage
Rope (no projections, difficult to break)	Seat belt pretensioner disposal
Tire Width: 185 mm (7.28 in.) Inner diam: 360 mm (14.17 in.)	Seat belt pretensioner disposal
Tire with disc wheel Width: 185 mm (7.28 in.) Inner diam 360 mm (14.17 in.)	Seat belt pretinsioner disposal
Vinyl bag	Seat belt pretensioner disposal

PP095–01

EQUIPMENT

Voltmeter	
Ammeter	
Ohmmeter	
Test lead	
Thermometer	Thermistor
Torque wrench	
Dial indicator	Magnetic clutch
Plastic hammer	Magnetic clutch
Hexagon wrench	Expansion valve

PP01U–01

LUBRICANT

Item	Capacity	Classification
Engine oil		API grade SH, Energy–Conserving II multigrade
Dry fill	5.9 liters (6.2 US qts, 5.2 lmp. qts)	engine oil or ILSAC multigrade engine oil and
Drain and refill		recommended viscosity oil, with SAE 5W–30
w/ Oil filter change	5.2 liters (5.5 US qts, 4.6 lmp. qts)	being preferred engine oil
w/o Oil filter change	4.9 liters (5.2 US qts, 4.3 lmp. qts)	

PP0AA–01

LUBRICANT

Item	Capacity	Classification
Automatic transmission fluid Dry fill Drain and refill	 6.5 liters (6.9 US qts, 5.7 lmp.qts) 2.4 liters (2.5 US qts, 2.1 lmp.qts)	 ATF D–II or DEXRON®III (DEXRON®II)

PP09G–01

LUBRICANT

Item	Capacity	Classification
Automatic transmission fluid		
A340E:		
Dry fill	7.2 liters (7.6 US qts, 6.3 Imp.qts)	
Drain and refill	1.6 liters (1.7 US qts, 1.4 Imp.qts)	ATF D–II or DEXRON®III (DEXRON®II)
A340F:		
Dry fill	10.1 liters (10.7 US qts, 8.9 Imp.qts)	
Drain and refill	2.0 liters (2.1 US qts, 1.8 Imp.qts)	

PP0AF–01

LUBRICANT

Item	Capacity	Classification
Transfer oil	1.0 liters (1.1 US qts, 0.9 lmp.qts)	API GL–4 or GL–5 SAE 75W–90

PP09B–02

LUBRICANT

Item	Capacity	Application
Front drive shaft Outboard joint grease (Color = Black) Inboard joint grease (Color = Yellow ocher)	215 – 235 g (7.58 – 8.29 oz.) 230 – 250 g (8.11 – 8.82 oz.)	
Front differential Differential oil (w/o A.D.D.)	1.10 liters (1.16 US qts. 0.97 Imp. qts)	Hypoid gear oil API GL–5 Above –18˚C (0˚F) SAE 90 Below –18˚C (0˚F) SAE 80W or 80W–90
Differential oil (w/ A.D.D.)	1.15 liters (1.22 US qts. 1.01 Imp. qts)	Hypoid gear oil API GL–5 SAE 75W–90
Rear differential Differential oil (2RZ–FE)	1.35 liters (1.43 US qts. 1.19 Imp. qts)	
Differential oil (3RZ–FE, 5VZ–FE)	4WD Extra long models: 2.45 liters (2.58 US qts. 2.16 Imp. qts)	
	w/ Diff. lock Short models: 2.65 liters (2.80 US qts. 2.33 Imp. qts)	
	w/ Diff. lock Extra long models: 2.95 liters (3.18 US qts. 2.60 Imp. qts)	
	w/o Diff. lock: 2.55 liters (2.69 US qts. 2.24 Imp. qts)	

PP09Q–02

LUBRICANT

Item	Capacity	Classification
Brake fluid	–	SAE J1703 or FMVSS No. 116 DOT 3

PP09L–02

LUBRICANT

Item	Capacity	Classification
Power steering fluid Total	0.8 liters (0.9 US qts, 0.7 lmp.qts)	ATF DEXRON® II or III

PP0A0–01

LUBRICANT

Item	Capacity	Classification
MP grease	–	–

PP096–01

LUBRICANT

Item	Capacity	Classification
Compressor oil	–	ND–OIL 8 or equivalent
When replacing receiver	20 cc (0.71 fl.oz.)	
When replacing condenser	40 cc (1.4 fl. oz.)	
When replacing evaporator	40 cc (1.4 fl. oz.)	

PP017–06

RECOMMENDED TOOLS

	09040–00011	Hexagon Wrench Set .	
	09090–04020	Engine Sling Device	For suspending engine
	09200–00010	Engine Adjust Kit .	
	09258–00030	Hose Plug Set .	Plug for the vacuum hose, fuel hose etc.
	09904–00010	Expander Set .	

EMISSION CONTROL (5VZ–FE)

PP014–01

RECOMMENDED TOOLS

	09082–00040 TOYOTA Electrical Tester.	

PP01E–01

RECOMMENDED TOOLS

	09082–00040	TOYOTA Electrical Tester.	
	09200–00010	Engine Adjust Kit .	
	09258–00030	Hose Plug Set .	Plug for the vacuum hose, fuel hose etc.

PP01S–01

RECOMMENDED TOOLS

	09200–00010 Engine Adjust Kit .	

IGNITION (5VZ–FE)

PP01Z–01

RECOMMENDED TOOLS

	09082–00040	TOYOTA Electrical Tester.	
	09200–00010	Engine Adjust Kit .	

PP025–01

RECOMMENDED TOOLS

	09082–00040 TOYOTA Electrical Tester.	

PP02B–01

RECOMMENDED TOOLS

	09082–00040 TOYOTA Electrical Tester.	

PP09X–01

RECOMMENDED TOOLS

	09031–00030	Pin Punch .	Reservoir tank
	09082–00040	TOYOTA Electrical Tester.	
	09905–00013	Snap Ring Pliers .	

PP0A8–01

RECOMMENDED TOOLS

	09905–00013 Snap Ring Pliers .	

PP09E–02

RECOMMENDED TOOLS

	09040–00011	Hexagon Wrench Set .	
	(09043–20120)	Socket Hexagon Wrench 12.	
	09082–00040	TOYOTA Electrical Tester.	
	09905–00012	Snap Ring No.1 Expander .	
	09905–00013	Snap Ring Pliers .	

PP0AD–01

RECOMMENDED TOOLS

	09031–00030	Pin Punch .	
	09042–00010	Torx Socket T30 .	
	09082–00040	TOYOTA Electrical Tester.	
	09905–00012	Snap Ring No.1 Expander .	

PP099–01

RECOMMENDED TOOLS

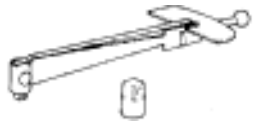	09025–00010	Torque Wrench (30 kgf–cm)	
	09031–00030	Pin Punch .	
	09044–00010	Torx Socket E14 .	
	09082–00040	TOYOTA Electrical Tester.	
	09905–00012	Snap Ring No.1 Expander .	
	09905–00013	Snap Ring Pliers .	

PP09O–02

RECOMMENDED TOOLS

	09082–00040 TOYOTA Electrical Tester.	
	09905–00013 Snap Ring Pliers .	

PP09J–02

RECOMMENDED TOOLS

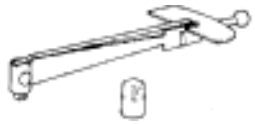	09025–00010	Torque Wrench (30 kgf–cm)	PS vane pump (2RZ–FE, 3RZ–FE, 5VZ–FE) Manual steering gear PS gear (2WD, 4WD and Pre runner)
	09042–00010	Torx Socket T30 .	Non–tilt steering column Tilt steering column
	09904–00010	Expander Set .	
	(09904–00050)	No. 4 Claw	
	09905–00012	Snap Ring No.1 Expander .	
	09905–00013	Snap Ring Pliers .	

PP28H–01

RECOMMENDED TOOLS

	09042–00020	Torx Socket T40 .	Airbag sensor assembly
	09082–00050	TOYOTA Electrical Tester Set.	
	09082–00040	TOYOTA Electrical Tester.	
	(09083–00150)	Test Lead Set	

PP090–01

RECOMMENDED TOOLS

	09082–00050 TOYOTA Electrical Tester Set.	

PP094–01

RECOMMENDED TOOLS

	09082–00040	TOYOTA Electrical Tester.	
	09216–00021	Belt Tension Gauge .	
	09216–00030	Belt Tension Gauge Cable .	

CLUTCH

SST (Special Service Tools)

PP09W–01

	09023–00100	Union Nut Wrench 10 mm	Clutch line
	09301–00110	Clutch Guide Tool	
	09303–35011	Input Shaft Front Bearing Puller	
	09304–30012	Input Shaft Front Bearing Replacer	
	09333–00013	Clutch Diaphragm Spring Aligner	

PP1YR–01

SSM (Special Service Materials)

08826–00090	Seal Packing 1281, THREE BOND 1281 or equivalent (FIPG)	Front differential (w/ A.D.D.) Rear differential (3RZ–FE, 5VZ–FE w/ Diff. lock)
08833–00070	Adhesive 1324, THREE BOND 1324 or equivalent	Front differential
08833–00080	Adhesive 1344 THREE BOND 1344 LOCTITE 242 or equivalent	Rear differential (3RZ–FE, 5VZ–FE w/ Diff. lock)
08833–00100	THREE BOND 1360K or equivalent	Rear differential (3RZ–FE w/o Diff. lock)

PP1B9–07

SSM (Special Service Materials)

08833–00080	Adhesive 1344 THREE BOND 1344 LOCTITE 242 or equivalent	Manual steering gear PS gear (2WD, 4WD and Pre runner)

PP0TC–04

SSM (Special Service Materials)

08833–00070	Adhesive 1324, THREE BOND 1324 or equivalent	
08833–00030	Three cement black or equivalent	
08850–00801	Windshield Glass Adhesive Set or equivalent	

ENGINE MECHANICAL (5VZ–FE)

PP016–06

SST (Special Service Tools)

	09201–10000	Valve Guide Bushing Remover & Replacer Set	
	(09201–01060)	Valve Guide Bushing Remover & Replacer 6	
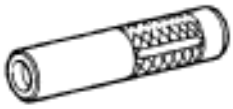	09201–41020	Valve Stem Oil Seal Replacer	
	09202–70020	Valve Spring Compressor	
	09213–54015	Crankshaft Pulley Holding Tool	
	(90119–08216)	Bolt	
	09222–30010	Connecting Rod Bushing Remover & Replacer	
	09223–15030	Oil Seal & Bearing Replacer	Crankshaft rear oil seal
	09228–07501	Oil Filter Wrench	
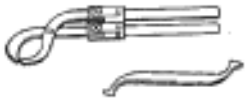	09248–55040	Valve Clearance Adjust Tool Set	
	(09248–05410)	Valve Lifter Press	
	(09248–05420)	Valve Lifter Stopper	

	09330–00021	Companion Flange Holding Tool	Crankshaft pulley
	09816–30010	Oil Pressure Switch Socket	Oil pressure switch
	09843–18020	Diagnosis Check Wire	
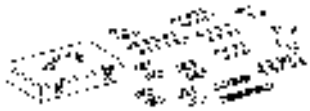	09950–50012	Puller C Set	
	(09951–05010)	Hanger 150	Crankshaft pulley Crankshaft timing pulley
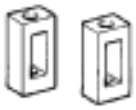	(09952–05010)	Slide Arm	Crankshaft pulley Crankshaft timing pulley
	(09953–05020)	Center Bolt 150	Crankshaft pulley Crankshaft timing pulley
	(09954–05010)	Claw No.1	Crankshaft timing pulley
	(09954–05030)	Claw No.3	Crankshaft pulley
	09950–70010	Handle Set	
	(09951–07150)	Handle 150	Crankshaft rear oil seal Valve guide bushing
	09960–10010	Variable Pin Wrench Set	
	(09962–01000)	Variable Pin Wrench Arm Assy	Camshaft timing pulley Camshaft sub–gear

	(09963–01000) Pin 10	Camshaft timing pulley
	(09963–00600) Pin 6	Camshaft sub–gear

SFI (5VZ–FE)

PP01D–06

SST (Special Service Tools)

	09205–76030	Cylinder Head Setting Bolt Tightening Adaptor	ECT sensor
	09268–41047	Injection Measuring Tool Set	
	(09268–41091)	NO.7 Union	
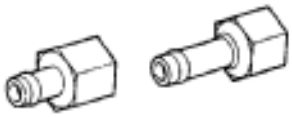	(09268–52011)	Injection Measuring Attachment	
	09268–45014	EFI Fuel Pressure Gauge	
	09631–22020	Power Steering Hose Nut 14 x 17 mm Wrench Set	Fuel line flare nut
	09817–16011	Back–up Light Switch Tool	Knock sensor
	09842–30070	Wiring ”F” EFI Inspection	
	09843–18020	Diagnosis Check Wire	

COOLING (5VZ–FE)

PP01I–01

SST (Special Service Tools)

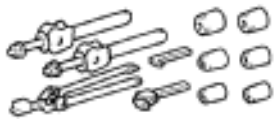	09230–01010 Radiator Service Tool Set	

LUBRICATION (5VZ–FE)

PP01R–01

SST (Special Service Tools)

	09032–00100	Oil Pan Seal Cutter	
	09228–07501	Oil Filter Wrench	
	09309–37010	Transmission Bearing Replacer	Camshaft front oil seal
	09816–30010	Oil Pressure Switch Socket	

STARTING (5VZ–FE)

PP024–01

SST (Special Service Tools)

	09286–46011	Injection Pump Spline Shaft Puller	Armature bearing
	09201–41020	Valve Stem Oil Seal Replacer	Armature front bearing
	09810–38140	Starter Magnet Switch Nut Wrench 14	Terminal kit

CHARGING (5VZ–FE)

PP02A–01

SST (Special Service Tools)

	09285–76010	Injection Pump Camshaft Bearing Cone Replacer	Rotor rear bearing cover
	09286–46011	Injection Pump Spline Shaft Puller	Rectifier end frame
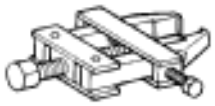	09820–00021	Alternator Rear Bearing Puller	
	09820–00030	Alternator Rear Bearing Replacer	
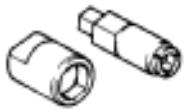	09820–63010	Alternator Pulley Set Nut Wrench Set	
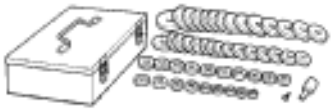	09950–60010	Replacer Set	Rotor front bearing
	(09951–00500)	Replacer 50	

AUTOMATIC TRANSMISSION (A43D)

PP0A7–01

SST (Special Service Tools)

	09308–10010	Oil Seal Puller	
	09325–20010	Transmission Oil Plug	
	09350–20015	TOYOTA Automatic Transmission Tool Set	
	(09397–22020)	One–way Clutch Test Tool Set	
	09992–00095	Automatic Transmission Oil Pressure Gauge Set	
	(09992–00112)	Adaptor A	
	(09992–00271)	Gauge Assy	

AUTOMATIC TRANSMISSION (A340E, A340F)

PP1YE–01

SST (Special Service Tools)

	09032–00100	Oil Pan Seal Cutter	Valve body assembly
	09308–00010	Oil Seal Puller	Extension housing oil seal
	09309–37010	Transmission Bearing Replacer	Extension housing oil seal
	09350–30020	TOYOTA Automatic Transmission Tool Set	
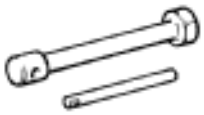	(09351–32010)	One–way Clutch Test Tool	Torque converter clutch and drive plate
	(09351–32020)	Stator Stopper	Torque converter clutch and drive plate
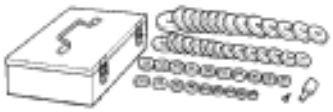	09950–60010	Replacer Set	
	(09951–00350)	Replacer 35	Extension housing oil seal
	09950–70010	Handle Set	
	(09951–07100)	Handle 100	Extension housing oil seal

AUTOMATIC TRANSMISSION (A340E, A340F)

PP1YE–01

SST (Special Service Tools)

	09032–00100	Oil Pan Seal Cutter	Valve body assembly
	09308–00010	Oil Seal Puller	Extension housing oil seal
	09309–37010	Transmission Bearing Replacer	Extension housing oil seal
	09350–30020	TOYOTA Automatic Transmission Tool Set	
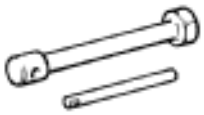	(09351–32010)	One–way Clutch Test Tool	Torque converter clutch and drive plate
	(09351–32020)	Stator Stopper	Torque converter clutch and drive plate
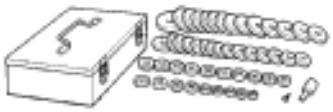	09950–60010	Replacer Set	
	(09951–00350)	Replacer 35	Extension housing oil seal
	09950–70010	Handle Set	
	(09951–07100)	Handle 100	Extension housing oil seal

TRANSFER

PP0AC–03

SST (Special Service Tools)

	09223–15020	Oil Seal & Bearing Replacer	Planetary gear outer bearing
	09304–12012	Input Shaft Front Bearing Replacer	Shift fork shaft oil seal
	09316–60011	Transmission & Transfer Bearing Replacer	
	(09316–00011)	Replacer Pipe	High and low clutch hub Rear output shaft bearing Front case oil seal
	(09316–00071)	Replacer ”F”	Rear output shaft bearing
	09330–00021	Companion Flange Holding Tool	Companion flange
	09515–30010	Rear Wheel Bearing Replacer	Planetary gear outer bearing
	09554–22010	Differential Oil Seal Replacer	Extension housing oil seal
	09554–30011	Differential Oil Seal Replacer	Planetary gear outer bearing
	09555–55010	Differential Drive Pinion Bearing Replacer	Driven sprocket rear bearing Rear output shaft bearing Planetary gear outer bearing
	09612–65014	Steering Worm Bearing Puller	
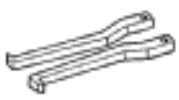	(09612–01030)	Claw ”C”	Planetary gear inner bearing

	(09612–01050)	Hanger Pin with Nut	Planetary gear inner bearing
	09950–40011	Puller B Set	
	(09951–04020)	Hanger 200	Companion flange
	(09952–04010)	Slide Arm	Companion flange
	(09953–04030)	Center Bolt 200	Companion flange
	(09954–04010)	Arm 25	Companion flange
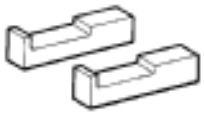	(09955–04051)	Claw No.5	Companion flange
	(09957–04010)	Attachment	Companion flange
	(09958–04011)	Holder	Companion flange
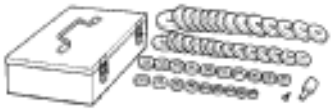	09950–60010	Replacer Set	
	(09951–00220)	Replacer 22	Companion flange oil seal
	(09951–00350)	Replacer 35	Companion flange oil seal
	(09951–00570)	Replacer 57	Planetary gear inner bearing

	(09951–00590) Replacer 59	Front bearing retainer oil seal
	(09952–06010) Adapter	Companion flange oil seal
	09950–70010 Handle Set	
	(09951–07100) Handle 100	Front bearing retainer oil seal Planetary gear outer bearing Planetary gear inner bearing Companion flange oil seal

PROPELLER SHAFT

SST (Special Service Tools)

PP0AH–03

	09325–20010	Transmission Oil Plug	2–joint type: Transmission oil leakage prevention
	09325–40010	Transmission Oil Plug	3–joint type: Transmission oil leakage prevention
	09330–00021	Companion Flange Holding Tool	Flange
	09332–25010	Universal Joint Bearing Remover & Replacer	Spider bearing
	09950–30011	Puller A Set	
	(09951–03010)	Upper Plate	
	(09953–03010)	Center Bolt	
	(09954–03010)	Arm	
	(09955–03030)	Lower Plate 130	
	(09956–03020)	Adapter 18	

SUSPENSION AND AXLE

SST (Special Service Tools)

PP1YQ–02

	09214–76011	Crankshaft Pulley Replacer	Rear differential (3RZ–FE, 5VZ–FE w/ Diff. lock)
	09223–15020	Oil Seal & Bearing Replacer	Front differential
	09223–15030	Oil Seal & Bearing Replacer	Front axle (4WD and pre runner)
	09223–56010	Crankshaft Rear Oil Seal Replacer	Rear axle
	09226–10010	Crankshaft Front & Rear Bearing Replacer	Front differential
	09240–00020	Wire Gauge Set	Front drive shaft (4WD)
	09308–00010	Oil Seal Puller	Front differential Rear axle Rear differential (3RZ–FE, 5VZ–FE w/ Diff. lock)
	09309–37010	Transmission Bearing Replacer	Front differential Front suspension (4WD and pre runner)
	09316–12010	Transfer Bearing Replacer	Rear differential (Except 2RZ–FE)
	09316–60011	Transmission & Transfer Bearing Replacer	
	(09316–00011)	Replacer Pipe	Rear differential
	(09316–00021)	Replacer ”A”	Rear differential

	(09316–00051)	Replacer ”D”	Rear axle Rear differential (3RZ–FE, 5VZ–FE w/ Diff. lock)
	09318–12010	Transfer Bearing Adjusting Nut Wrench	Front axle (4WD and pre runner)
	09330–00021	Companion Flange Holding Tool	Front differential Rear differential
	09350–20015	TOYOTA Automatic Transmission Tool Set	Front differential
	(09369–20040)	Piston Spring Compressor Set	
	09350–32014	TOYOTA Automatic Transmission Tool Set	Front differential Rear differential
	09308–10010	Oil Seal Puller	
	09502–12010	Differential Bearing Replacer	Front differential
	09504–00011	Differential Side Bearing Adjusting Nut Wrench	Rear differential (2RZ–FE and 3RZ–FE, 5VZ–FE w/ Diff. lock)
	09504–22011	Differential Side Bearing Replacer	Rear differential (3RZ–FE, 5VZ–FE w/o Diff. lock)
	09506–30012	Differential Drive Pinion Rear Bearing Cone Replacer	Front differential Rear differential
	09506–35010	Differential Drive Pinion Rear Bearing Replacer	Front suspension (4WD and pre runner) Rear differential (3RZ–FE, 5VZ–FE w/o Diff. lock)
	09515–30010	Rear Wheel Bearing Replacer	Rear axle

	09521–24010	Drive Shaft Boot Clamping Tool	Front drive shaft (4WD)
	09521–25011	Rear Axle Shaft Puller	Rear axle
	09523–36010	Rear Axle Hub Guide Tool	Rear differential (3RZ–FE, 5VZ–FE w/o Diff. lock)
	09527–17011	Rear Axle Shaft Bearing Remover	Front axle
	09550–10013	Replacer Set ”B”	
	(09252–10010)	No. 1 Replacer Handle–	Rear differential Rear suspension
	(09553–10010)	Differential Side Bearing Replacer	Rear suspension
	(09557–10011)	Differential Drive Pinion Front Bearing Replacer	Rear differential (2RZ–FE)
	09554–22010	Differential Oil Seal Replacer	Front differential
	09554–30011	Differential Oil Seal Replacer	Rear differential (2RZ–FE)
	09556–22010	Drive Pinion Front Bearing Remover	Front differential Rear differential
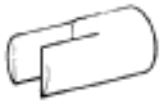	09564–32011	Differential Preload Adaptor	Front differential
	09570–22011	Differential Mounting Cushion Remover & Replacer	Front differential

	09608–32010	Steering Knuckle Oil Seal Replacer	Front differential
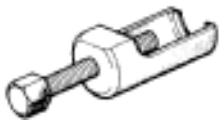	09610–20012	Pitman Arm Puller	Front suspension
	09612–65014	Steering Worm Bearing Puller	Front differential
	(09612–01020)	Claw ”B”	
	(09612–01050)	Hanger Pin with Nut	
	09628–62011	Ball Joint Puller	Front axle (2WD) Front drive shaft (4WD) Front suspension
	09631–10030	Oil Seal Remover	Front drive shaft (4WD)
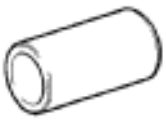	09632–36010	Steering Vane Pump Bearing Replacer	Front suspension (4WD and pre runner)
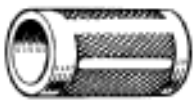	09636–20010	Upper Ball Joint Dust Cover Replacer	Front differential Rear differential
	09649–17010	Steering Knuckle Tool	Front axle (4WD and pre runner) Rear differential (3RZ–FE, 5VZ–FE w/o Diff. lock)
	09650–17011	Hub Bolt Remover	Front axle (4WD) Rear axle
	09710–30021	Suspension Bushing Tool Set	
	(09710–03031)	Bushing Remover	Front suspension (2WD)

	(09710–03051)	Bushing Replacer	Front axle (4WD)
	(09710–03071)	Remover	Front suspension (2WD)
	(09710–03101)	Bushing Replacer	Front suspension (2WD)
	(09710–03141)	Bushing Remover Base	Front suspension (2WD)
	09726–40010	Lower Control Shaft Bearing Replacer	Rear differential (3RZ–FE, 5VZ–FE w/ Diff. lock)
	09727–22011	Front Spring Compressor	Front suspension (2WD)
	(09727–23010)	Hook Set	
	(09727–23020)	Spacer	
	(09727–23030)	Rod Set	
	(09727–23040)	Attachment Set	
	09727–30021	Coil Spring Compressor	Front suspension (4WD and pre runner)
	09751–36011	Brake Line Union Nut 10 x 12 mm Wrench	Rear axle
	09922–10010	Variable Open Wrench	Front suspension (4WD and pre runner)

	09950–00020	Bearing Remover	Front differential Rear differential
	09950–30011	Puller A Set	
	(09951–03010)	Upper Plate	Front differential Rear differential
	(09953–03010)	Center Bolt	Front differential Rear differential
	(09954–03010)	Arm	Front differential Rear differential
	(09955–03030)	Lower Plate 130	Front differential Rear differential
	(09956–03020)	Adapter 18	Front differential Rear differential (2RZ–FE, 3RZ–FE, 5VZ–FE w/ Diff. lock)
	(09956–03050)	Adapter 24	Rear differential (3RZ–FE, 5VZ–FE w/o Diff. lock)
	09950–40011	Puller B Set	
	(09951–04010)	Hanger 150	Front axle (4WD), Front differential, Front suspension (4WD and pre runner), Rear differential
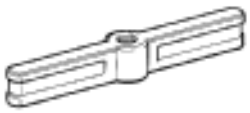	(09951–04020)	Hanger 200	Front axle (4WD)
	(09952–04010)	Slide Arm	Front axle (4WD), Front differential, Front suspension (4WD and pre runner), Rear differential
	(09953–04020)	Center Bolt 150	Front axle (4WD), Front differential, Front suspension (4WD and pre runner), Rear differential

	(09954–04010)	Arm 25	Front axle (4WD) Front differential Front suspension (4WD) Rear differential
	(09955–04011)	Claw No.1	Front differential
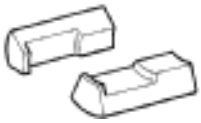	(09955–04031)	Claw No.3	Front axle (4WD) Front suspension (4WD and Pre runner)
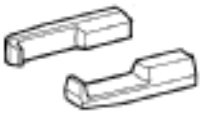	(09955–04061)	Claw No.6	Front differential Rear differential
	(09957–04010)	Attachment	Front axle (4WD), Front differential, Front suspension (4WD and pre runner), Rear differential
	(09958–04011)	Holder	Front axle (4WD), Front differential, Front suspension (4WD and pre runner), Rear differential
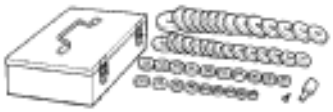	09950–60010	Replacer Set	
	(09951–00380)	Replacer 38	Front differential
	(09951–00450)	Replacer 45	Rear differential (2RZ–FE)
	(09951–00480)	Replacer 48	Front differential Rear differential (Except 2RZ–FE)
	(09951–00490)	Replacer 49	Front axle (2WD)
	(09951–00540)	Replacer 54	Front differential
	(09951–00550)	Replacer 55	Rear differential (3RZ–FE, 5VZ–FE w/ Diff. lock)

	(09951–00560)	Replacer 56	Rear axle
	(09951–00610)	Replacer 61	Rear axle
	(09951–00640)	Replacer 64	Front axle (2WD) Rear differential (3RZ–FE, 5VZ–FE w/o Diff. lock)
	(09951–00650)	Replacer 65	Front axle (4WD and pre runner) Front differential
	09950–60020	Replacer Set No.2	
	(09951–00710)	Replacer 71	Front axle (2WD) Rear axle Rear differential
	(09951–00730)	Replacer 73	Rear differential (3RZ–FE, 5VZ–FE w/ Diff. lock)
	(09951–00790)	Replacer 79	Front differential Rear differential
	(09951–00810)	Replacer 81	Front axle (4WD)
	(09951–00890)	Replacer 89	Rear axle
	(09951–00910)	Replacer 91	Front axle (4WD and pre runner) Rear differential (3RZ–FE, 5VZ–FE w/o Diff. lock)
	09950–70010	Handle Set	Front axle Front differential Rear axle Rear differential
	(09951–07150)	Handle 150	

	09960–10010	Variable Pin Wrench Set	Rear differential (3RZ–FE, 5VZ–FE w/ Diff. lock)
	(09962–01000)	Variable Pin Wrench Arm Assy	
	(09963–00700)	Pin 7	

BRAKE

PP09N–01

SST (Special Service Tools)

	09023–00100	Union Nut Wrench 10 mm	
	09703–30010	Brake Shoe Return Spring Tool	
	09709–29018	LSPV Gauge Set	
	09718–00010	Shoe Hold Down Spring Driver	
	09737–00010	Brake Booster Push Rod Gauge	
	09843–18020	Diagnosis Check Wire	

STEERING

PP09I–03

SST (Special Service Tools)

	09521–24010	Drive Shaft Boot Clamping Tool	PS gear (2WD)
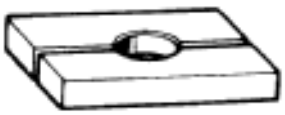	09527–20011	Rear Axle Shaft Bearing Remover	PS gear (2WD)
	09608–04031	Front Hub Inner Bearing Cone Replacer	PS vane pump (2RZ–FE, 3RZ–FE)
	09612–00012	Rack & Pinion Steering Rack Housing Stand	Manual steering gear PS gear (2WD, 4WD and Pre runner)
	09612–22011	Tilt Handle Bearing Replacer	PS gear (2WD)
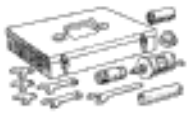	09612–24014	Steering Gear Housing Overhaul Tool Set	
	(09613–22011)	Steering Rack Shaft Bushing Puller	PS gear (2WD)
	(09616–10010)	Steering Pinion Bearing Adjusting Socket	Manual steering gear
	09616–00010	Steering Worm Bearing Adjusting Socket	PS gear (2WD, 4WD and Pre runner)
	09631–00350	Steering Rack Cover 35	PS gear (4WD and Pre runner)
	09631–10021	Rack Stopper Wrench	Manual steering gear PS gear (2WD)
	09631–10030	Oil Seal Remover	PS vane pump (2RZ–FE, 3RZ–FE)

	09631–12071	Steering Rack Oil Seal Test Tool	PS gear (2WD, 4WD and Pre runner)
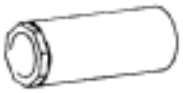	09631–20060	Bearing Guide Nut Wrench	PS gear (4WD and Pre runner)
	09631–20081	Seal Ring Tool	PS gear (2WD, 4WD and Pre runner)
	09631–20102	Steering Rack Cover ”H”	PS gear (2WD)
	09631–22020	Power Steering Hose Nut 14 x 17 mm Wrench Set	PS gear (2WD, 4WD and Pre runner)
	09633–00020	Power Steering Hose Nut Wrench	PS gear (2WD, 4WD and Pre runner)
	09640–10010	Power Steering Pressure Gauge Set	
	(09641–01010)	Gauge Assy	Power steering fluid
	(09641–01030)	Attachment B	Power steering fluid
	(09641–01060)	Attachment E	Power steering fluid
	09922–10010	Variable Open Wrench	Manual steering gear PS gear (2WD, 4WD and Pre runner)
	09950–40011	Puller B Set	
	(09958–04011)	Holder	Tilt steering column

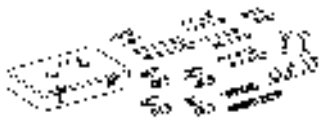	09950–50012	Puller C Set	
	(09951–05010)	Hanger 150	Non–tilt steering column Tilt steering column
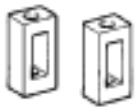	(09952–05010)	Slide Arm	Non–tilt steering column Tilt steering column
	(09953–05010)	Center Bolt 100	Non–tilt steering column Tilt steering column
	(09954–05020)	Claw No.2	Non–tilt steering column Tilt steering column
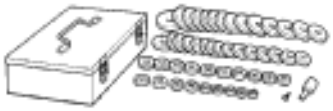	09950–60010	Replacer Set	
	(09951–00180)	Replacer 18	PS gear (2WD, 4WD and Pre runner)
	(09951–00240)	Replacer 24	PS gear (2WD)
	(09951–00250)	Replacer 25	Manual steering gear PS gear (2WD)
	(09951–00260)	Replacer 26	PS gear (2WD, 4WD and Pre runner)
	(09951–00280)	Replacer 28	PS gear (2WD, 4WD and Pre runner)
	(09951–00310)	Replacer 31	PS gear (2WD)
	(09951–00320)	Replacer 32	PS gear (2WD, 4WD and Pre runner)

	(09951–00330) Replacer 33	PS vane pump (5VZ–FE) PS gear (2WD, 4WD and Pre runner)
	(09951–00360) Replacer 36	PS gear (4WD and Pre runner)
	(09951–00400) Replacer 40	PS gear (2WD)
	(09951–00420) Replacer 42	PS gear (2WD)
	(09951–00490) Replacer 49	PS gear (4WD and Pre runner)
	(09952–06010) Adapter	PS gear (4WD and Pre runner)
	09950–70010 Handle Set	
	(09951–07100) Handle 100	PS vane pump (5VZ–FE) Manual steerig gear PS gear (4WD and Pre runner)
	(09951–07150) Handle 150	PS gear (2WD, 4WD and Pre runner)
	(09951–07200) Handle 200	PS gear (2WD)
	(09951–07360) Handle 360	PS gear (2WD, 4WD and Pre runner)
	09960–10010 Variable Pin Wrench Set	
	(09962–01000) Variable Pin Wrench Arm Assy	PS vane pump (2RZ–FE, 3RZ–FE, 5VZ–FE)

	(09963–01000) Pin 10	PS vane pump (2RZ–FE, 3RZ–FE, 5VZ–FE)

SUPPLEMENTAL RESTRAINT SYSTEM

PP1YP–01

SST (Special Service Tools)

	09082–00700	SRS Airbag Deployment Tool	
	09082–00760	Airbag Deployment Wire Sub–harness No.4	
	09843–18020	Diagnosis Check Wire	

BODY ELECTRICAL

PP08Z–01

SST (Special Service Tools)

 09843–18020 Diagnosis Check Wire	

BODY

PP1YH–01

SST (Special Service Tools)

	09082–00700	SRS Airbag Deployment Tool	
	09082–00740	Airbag Deployment Wire Sub–harness No.2	
	09806–30010	Windshield Moulding Remover	
	09812–00010	Door Hinge Set Bolt Wrench	

AIR CONDITIONING

SST (Special Service Tools)

PP093–01

	07110–58060 Air Conditioner Service Tool Set	
	(07117–58060) Refrigerant Drain Service Valve	
	(07117–58070) T–Joint	
	(07117–58080) Quick Disconnect Adapter	
	(07117–58090) Quick Disconnect Adapter	
	(07117–88060) Refrigerant Charging Hose	
	(07117–88070) Refrigerant Charging Hose	
	(07117–88080) Refrigerant Charging Hose	
	07112–66040 Magnetic Clutch Remover	
	07112–76060 Magnetic Clutch Stopper	
	07114–84010 Snap Ring Pliers	
	07114–84020 Snap Ring Pliers	

	07116–38360 Gas Leak Detector Assembly	

PROPELLER SHAFT ASSEMBLY (4WD and PRE RUNNER)

PR00V–02

COMPONENTS

HINT:

Pre runner is the models described below.

RZN191L–TRPDKAB, RZN196L–CRPDKAB, VZN195L–CRPDKAB

Front propeller shaft (4WD):

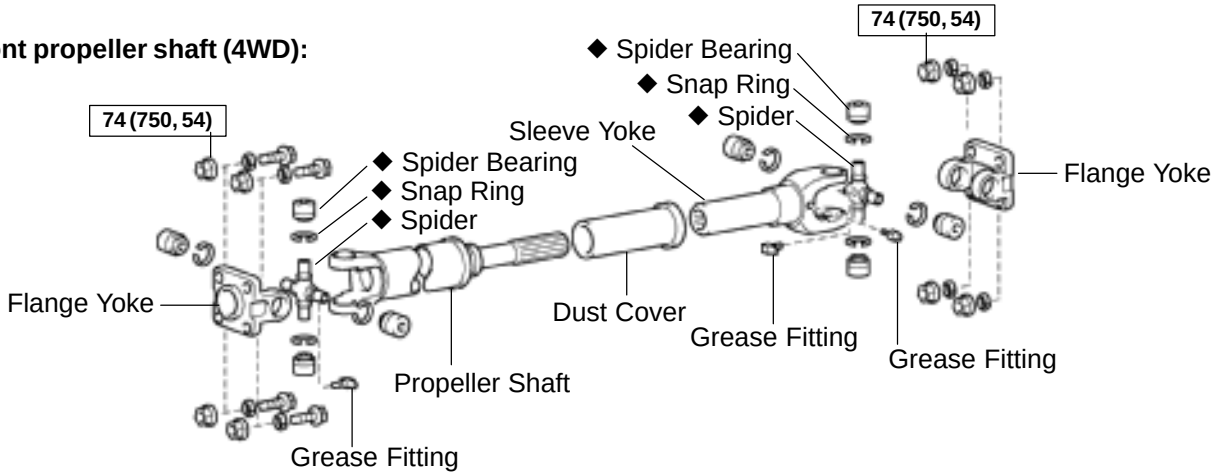

Propeller shaft (pre runner) and rear propeller shaft (4WD):

2–joint type:

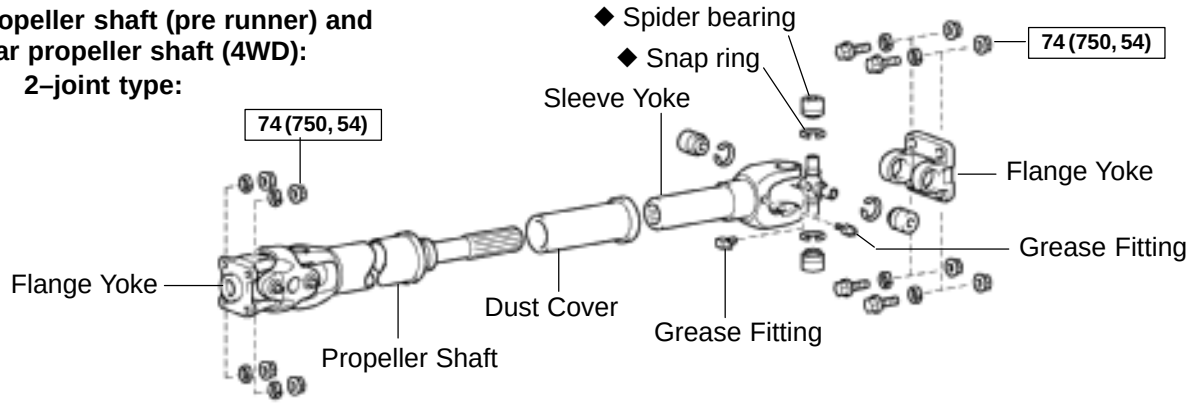

3–joint type:

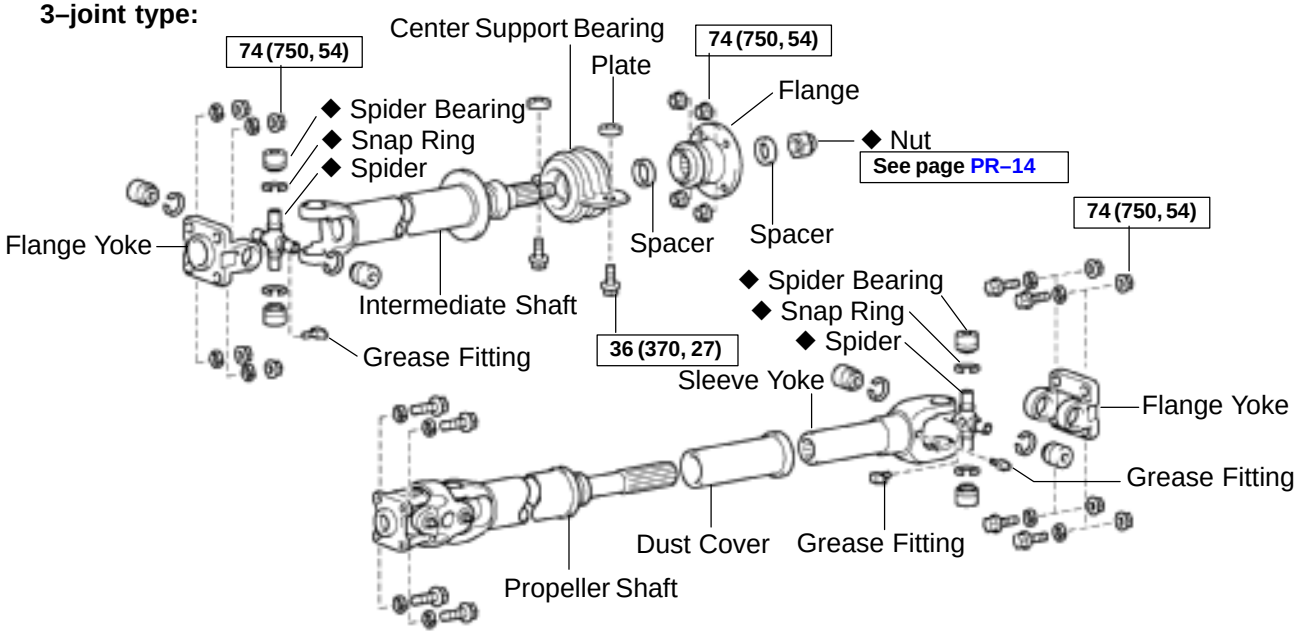

N·m (kgf·cm, ft·lbf) : Specified torque

◆ Non–reusable part

F01900

PR04Y–01

DISASSEMBLY

NOTICE:

Be careful not to grip the propeller shaft tube too tightly in a vise as this will cause deformation.

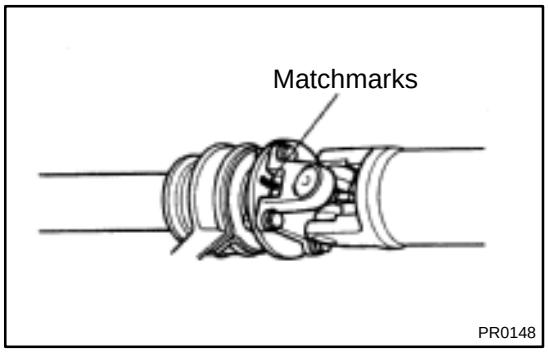

1. 3–joint type:

SEPARATE PROPELLER SHAFT AND INTERMEDIATE SHAFT

(a) Place matchmarks on the flanges.

(b) Remove the 4 nuts, bolts and washers.

(c) Separate the propeller shaft and intermediate shaft.

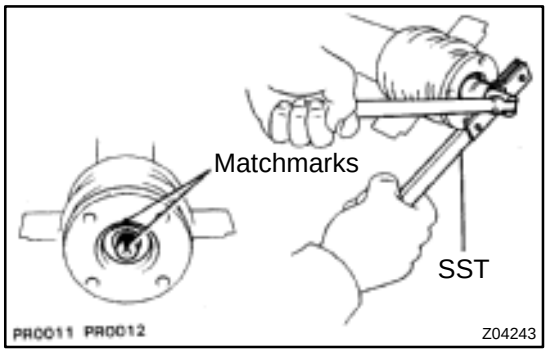

2. 3–joint type:

REMOVE FLANGE FROM INTERMEDIATE SHAFT

(a) Using a chisel and hammer, loosen the staked part of the nut.

(b) Using SST to hold the flange, remove the nut and spacer.
SST 09330–00021

(c) Place matchmarks on the flange and shaft.

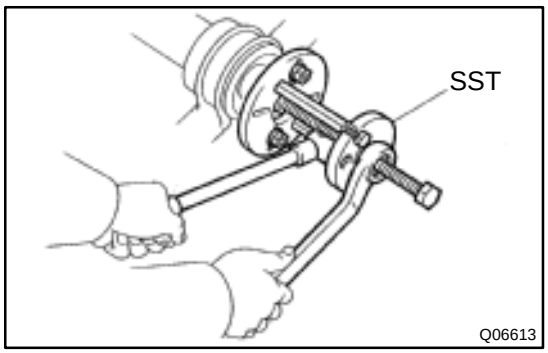

(d) Using SST, remove the flange from the intermediate shaft.
SST 09950–30011 (09951–03010, 09953–03010, 09954–03010, 09955–03030, 09956–03020)

(e) Remove the spacer.

3. 3–joint type:

REMOVE CENTER SUPPORT BEARING FROM INTERMEDIATE SHAFT

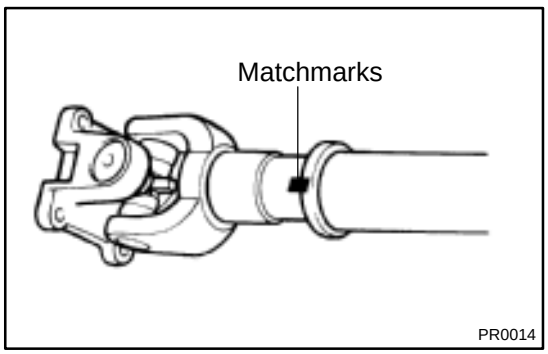

4. REMOVE SLEEVE YOKE FROM PROPELLER SHAFT

(a) Place matchmarks on the sleeve yoke and shaft.

(b) Pull out the sleeve yoke from the shaft.

(c) Remove the dust cover from the shaft.

PR04Z–01

INSPECTION

NOTICE:

Be careful not to grip the propeller shaft tube too tightly in a vise as this will cause deformation.

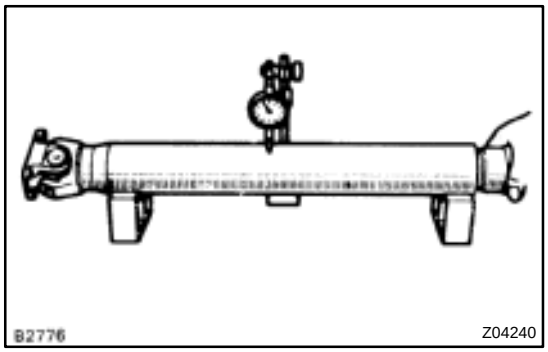

1. INSPECT PROPELLER SHAFT AND INTERMEDIATE SHAFT FOR DAMAGE OR RUNOUT

(a) Inspect the shafts for wear or damage.

(b) Using a dial indicator, check the runout of the shafts.

Maximum runout: 0.8 mm (0.031 in.)

If the shaft runout exceeds the maximum, replace the shaft.

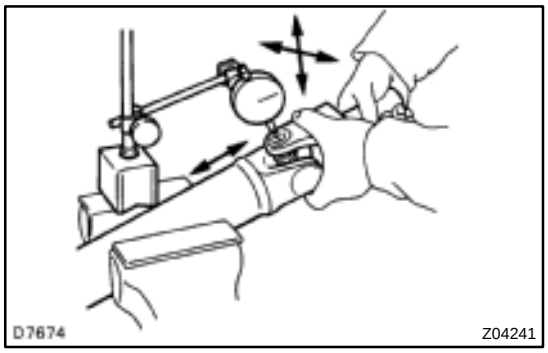

2. INSPECT SPIDER BEARING

(a) Inspect the spider bearings for wear or damage.

(b) Using a dial indicator, check the spider bearing axial play by turning the yoke while holding the shaft tightly.

Maximum bearing axial play: 0.05 mm (0.0020 in.)

If the spider bearing axial play exceeds the maximum, replace the spider bearing (See page PR–17).

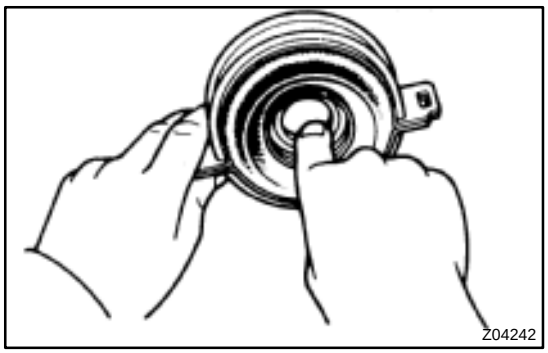

3. 3–joint type:
INSPECT CENTER SUPPORT BEARING FOR WEAR OR DAMAGE

Check that the bearing turns freely.

If the bearing is damaged, worn, or does not turn freely, replace it.

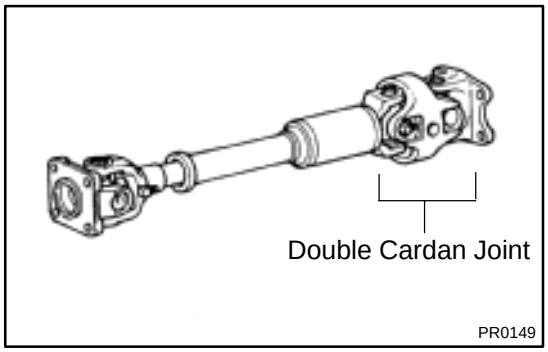

4. w/ Double cardan joint propeller shaft:
INSPECT WITH DOUBLE CARDAN JOINT PROPELLER SHAFT

(a) Inspect the shaft for wear or damage.

(b) Inspect the double cardan joint for wear or damage.

If any problem is found, replace the propeller shaft assembly.

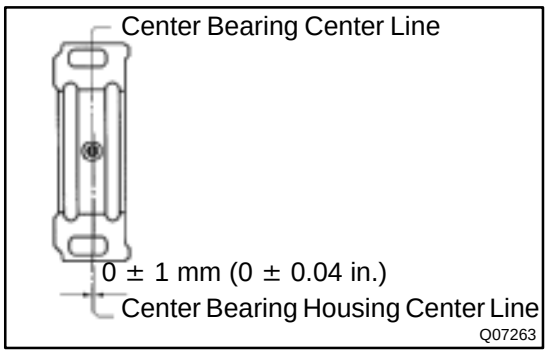

PR051–01

INSTALLATION

Installation is in the reverse order of removal (See page PR–11).

HINT:

- Propeller shaft (pre runner) and rear propeller shaft (4WD) of 3–joint type:
  Center bearing center line and the center bearing housing center line must be adjusted within 0 ± 1 mm (0 ± 0.04 in.) of each other in the vehicles front and rear direction when the vehicle is unloaded.
- Propeller shaft (pre runner) and rear propeller shaft (4WD) of 3–joint type:
  When adjusting the center bearing housing center line, it should be perpendicular to the axis of front propeller shaft.
- With a grease gun, pump grease into each fitting until it begins to flow around the oil seal.
  Grease:
  Spiders:
  Lithium base chassis grease, NLGI No. 2.
  Sleeve yoke and double cardan joint:
  Molybdenum disulfide lithium base chassis grease, NLGI No. 2.

TROUBLESHOOTING

PROBLEM SYMPTOMS TABLE

PR00O–02

Use the table below to help you find the cause of the problem. The numbers indicate the priority of the likely cause of the problem. Check each part in order. If necessary, replace these parts.

Symptom	Suspect Area	See page
Noise	1. Center bearing (Worn)	PR–5 PR–13
	2. Sleeve yoke spline (Worn)	–
	3. Spider bearing (Worn or Stuck)	PR–5 PR–13
Vibration	1. Transmission extension housing rear bushing (Worn)	–
	2. Sleeve yoke spline (Stuck)	–
	3. Propeller shaft (Runout)	PR–5 PR–13
	4. Propeller shaft (Imbalance)	–

PR050–01

REASSEMBLY

NOTICE:

Be careful not to grip the propeller shaft tube too tightly in a vise as this will cause deformation.

HINT:

When replacing the propeller shaft, install new parts facing, as shown in the illustration.

Front:

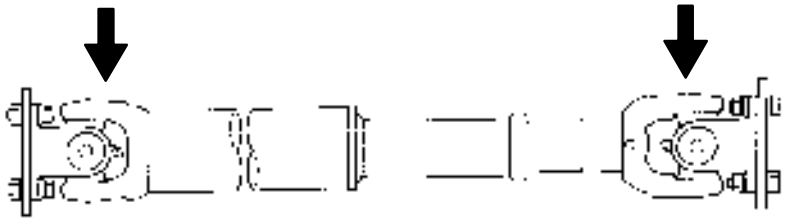

Rear:

2–joint type:

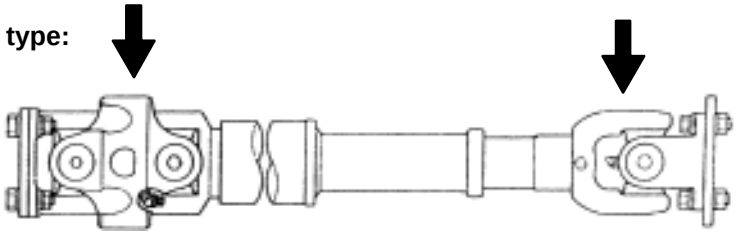

3–joint type:

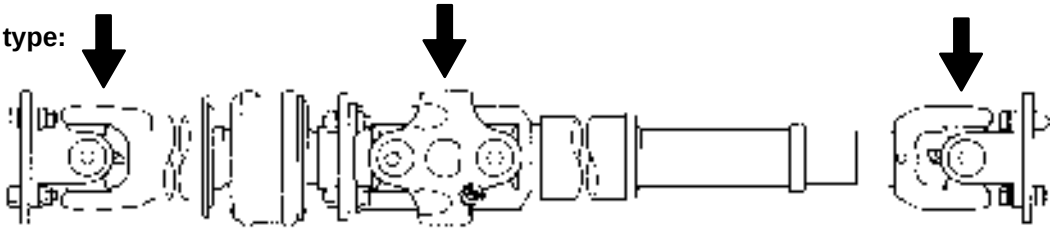

Q07229

Q07230

Q07231

F02102

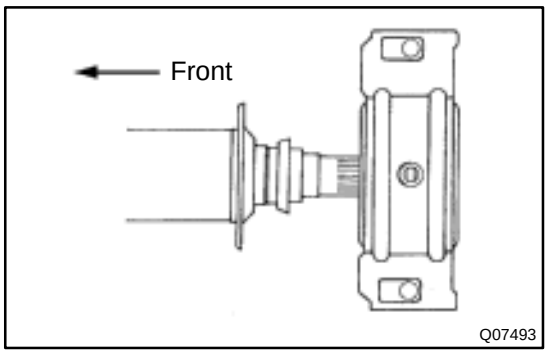

1. 3–joint type:
INSTALL CENTER SUPPORT BEARING ON INTERMEDIATE SHAFT

Install the center support bearing and spacer.

HINT:

Install the center support bearing with the cutout toward the rear.

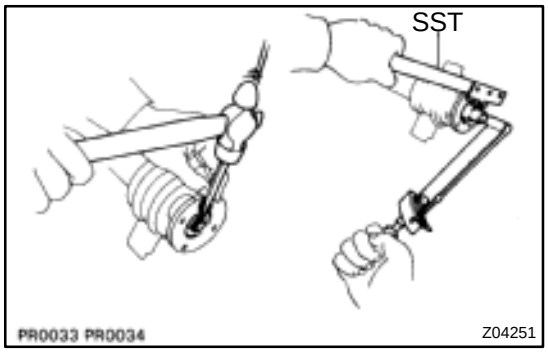

2. 3–joint type:
INSTALL FLANGE ON INTERMEDIATE SHAFT

(a) Coat the splines of the intermediate shaft with MP grease.

(b) Place the flange on the shaft and align the matchmarks.

HINT:

If replacing either the center flange or intermediate shaft, reassemble them so that the front flange yoke of the intermediate shaft and the rear flange yoke of the propeller shaft are facing in the same direction.

(c) Install the spacer.

(d) Using SST to hold the flange, press the bearing into position by tightening down a new nut.

SST 09330–00021

Torque: 181 N·m (1,850 kgf·cm, 134 ft·lbf)

(e) Loosen the nut.

(f) Torque the nut again.

Torque: 69 N·m (700 kgf·cm, 51 ft·lbf)

(g) Using a chisel and hammer, stake the nut.

3. 3–joint type:
CONNECT PROPELLER SHAFT AND INTERMEDIATE SHAFT

(a) Align the matchmarks on the flanges and connect the flanges with the 4 bolts, washers and nuts.

HINT:

If replacing either the center flange or intermediate shaft, reassemble them so that the front flange yoke of the intermediate shaft and the rear flange yoke of the propeller shaft are facing in the same direction.

(b) Torque the nuts.

Torque: 74 N·m (750 kgf·cm, 54 ft·lbf)

4. INSERT SLEEVE YOKE INTO PROPELLER SHAFT

(a) Apply grease to the propeller shaft spline and sleeve yoke sliding surface.

Grease:

Molybdenum disulfide lithium base chassis grease, NLGI No. 2.

(b) Install the dust cover to the shaft.

(c) Align the matchmarks on the yoke and propeller shaft.

PR04X–01

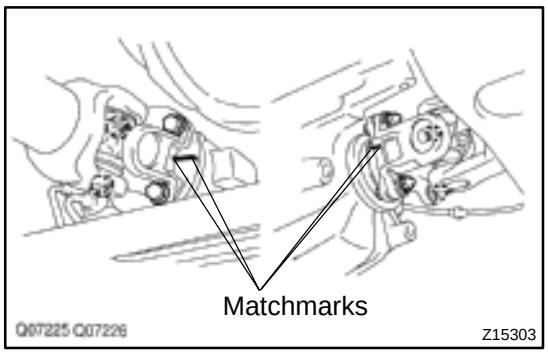

REMOVAL

1. 4WD:

REMOVE FRONT PROPELLER SHAFT

(a) Place matchmarks on the propeller shaft and front differential flanges.

(b) Remove the 4 nuts, bolts and washers.
Torque: 74 N·m (750 kgf·cm, 54 ft·lbf)

(c) Suspend the front side of the propeller shaft.

(d) Place matchmarks on the propeller shaft and transfer flanges.

(e) Remove the 4 nuts and washers.
Torque: 74 N·m (750 kgf·cm, 54 ft·lbf)

(f) Remove the front propeller shaft.

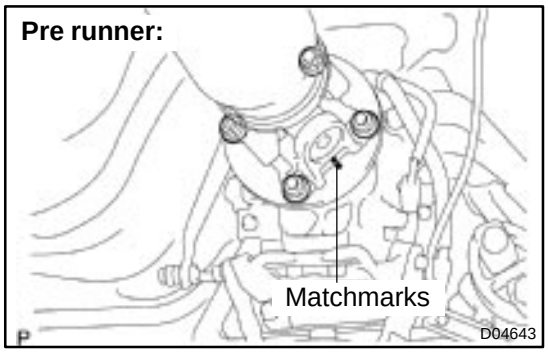

2. REMOVE PROPELLER SHAFT (PRE RUNNER) AND REAR PROPELLER SHAFT (4WD)

(a) Place matchmarks on the propeller shaft, transmission (pre runner) and transfer (4WD) flanges.

(b) Remove the 4 nuts and washers.
Torque: 74 N·m (750 kgf·cm, 54 ft·lbf)

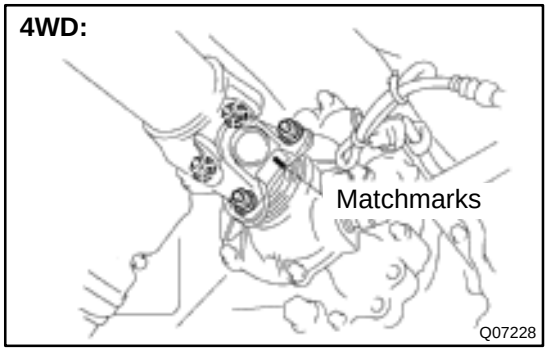

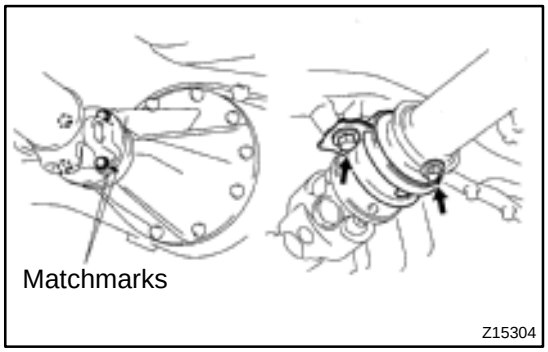

(c) Place matchmarks on the propeller shaft and rear differential flanges.

(d) Remove the 4 nuts, bolts and washers.
Torque: 74 N·m (750 kgf·cm, 54 ft·lbf)

(e) 3–joint type:
Remove the center support bearing 2 set bolts and 2 plates from the frame crossmember.
Torque: 36 N·m (370 kgf·cm, 27 ft·lbf)

(f) Remove the propeller shaft.

SPIDER BEARING

PR011–02

REPLACEMENT

NOTICE:

Be careful not to grip the propeller shaft tube too tightly in a vise as this will cause deformation.

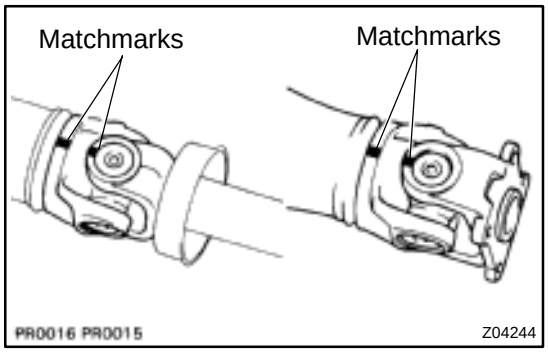

1. PLACE MATCHMARKS ON SHAFT AND YOKE

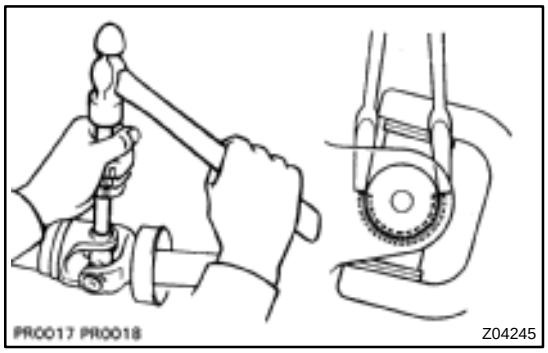

2. TMC made:
REMOVE SNAP RING

(a) Using a brass bar and hammer, slightly tap in the bearing outer races.

(b) Using 2 screwdrivers, remove the 4 snap rings from the grooves.

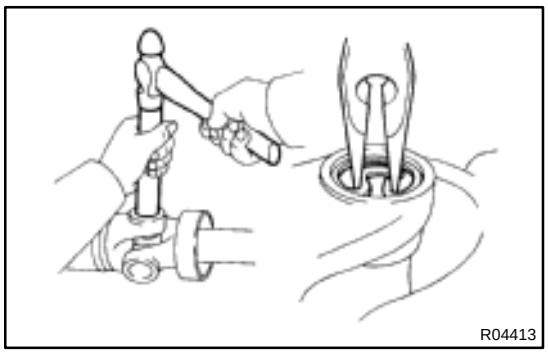

3. DANA made:
REMOVE SNAP RING

(a) Using a brass bar and hammer, slightly tap in the bearing outer races.

(b) Using needle nose pliers, remove the 4 snap rings from the grooves.

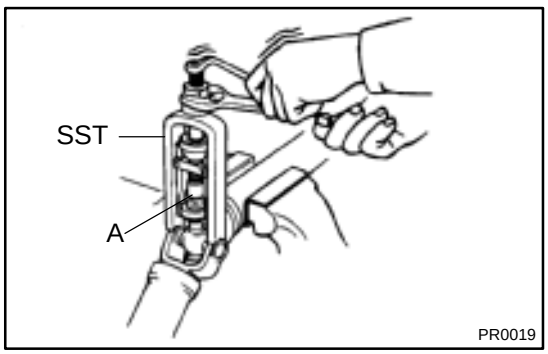

4. REMOVE SPIDER BEARING

(a) Using SST, push out the bearing from the propeller shaft.
SST 09332–25010

HINT:

Sufficiently raise the part indicated by ”A” so that it does not come into contact with the bearing.

(b) Clamp the bearing outer race in a vise and tap off the propeller shaft with a hammer.

HINT:
Remove the bearing on the opposite side in the same procedure.

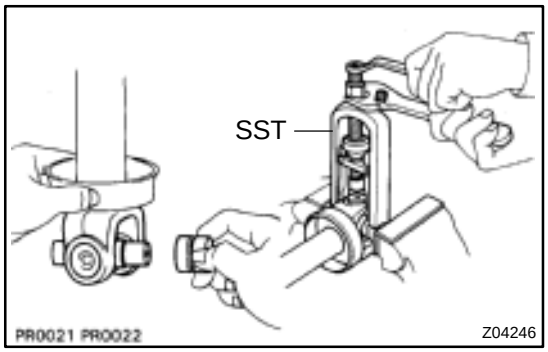

(c) Install the 2 removed bearing outer races to the spider.
(d) Using SST, push out the bearing from the yoke.
SST 09332–25010
(e) Clamp the outer bearing race in a vise and tap off the yoke with a hammer.

HINT:
Remove the bearing on the opposite side in the same procedure.

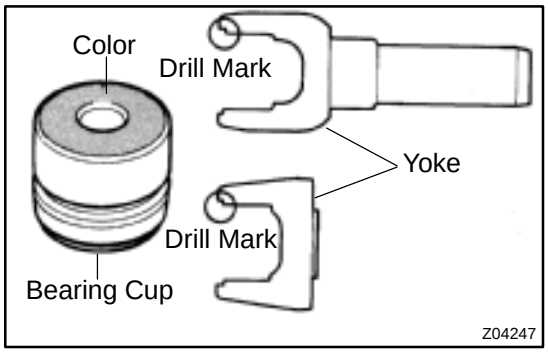

5. SELECT SPIDER BEARING

Select the bearing according to whether or not there is a drill mark on the yoke section.

Yoke	Bearing
With drill mark	With color mark (Red)
No drill mark	No color mark

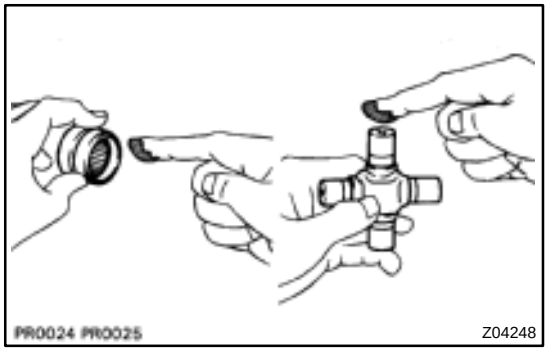

6. INSTALL SPIDER BEARING

(a) Apply MP grease to a new spider and bearings.

NOTICE:

Be careful not to apply too much grease.

(b) Align the matchmarks on the yoke and shaft.
(c) Fit the spider into the yoke.

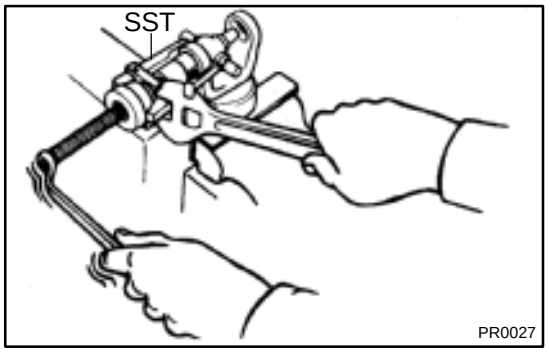

(d) Using SST, install new bearings on the spider.
SST 09332–25010

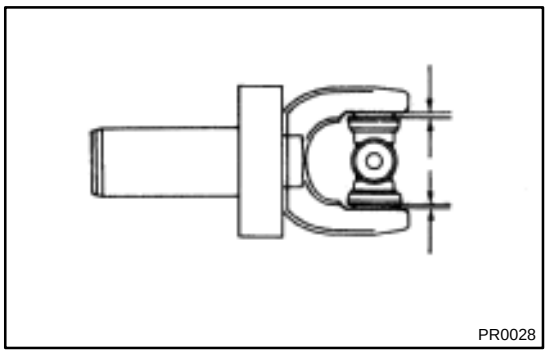
PR0028

(e) Using SST, adjust both bearings so that the snap ring grooves are at maximum and equal widths.

TMC made:

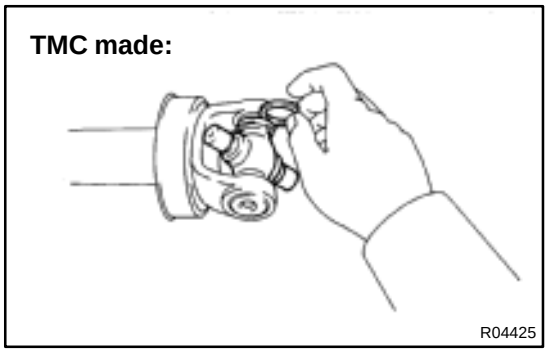
R04425

7. INSTALL SNAP RING

(a) Install 2 new snap rings of equal thickness which will allow 0 – 0.05 mm (0 – 0.0020 in.) axial play.

HINT:

Do not reuse the snap rings.

TMC made:

Color	Mark	Thickness mm (in.)
–	1	2.100 – 2.150 (0.0827 – 0.0846)
–	2	2.150 – 2.200 (0.0846 – 0.0866)
–	3	2.200 – 2.250 (0.0866 – 0.0886)
Brown	–	2.250 – 2.300 (0.0886 – 0.0906)
Blue	–	2.300 – 2.350 (0.0906 – 0.0925)
–	6	2.350 – 2.400 (0.0925 – 0.0945)
–	7	2.400 – 2.450 (0.0945 – 0.0965)
–	8	2.450 – 2.500 (0.0965 – 0.0984)

DANA made:

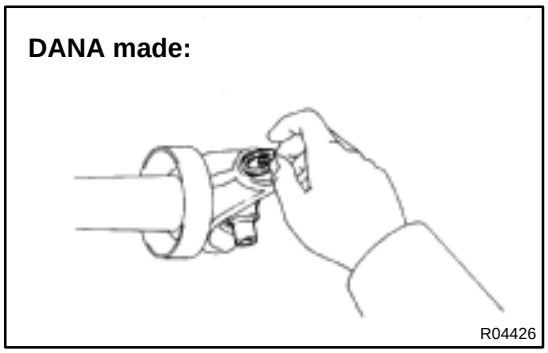
R04426

DANA made:

Color	Thickness mm (in.)
Green	1.384 (0.0545)
Red	1.435 (0.0565)
Black	1.486 (0.0585)
Copper	1.511 (0.0595)
Silver	1.537 (0.0605)
Yellow	1.588 (0.0625)
Blue	1.638 (0.0645)

(b) Using a hammer, tap the yoke until there is no clearance between the bearing outer race and snap ring.

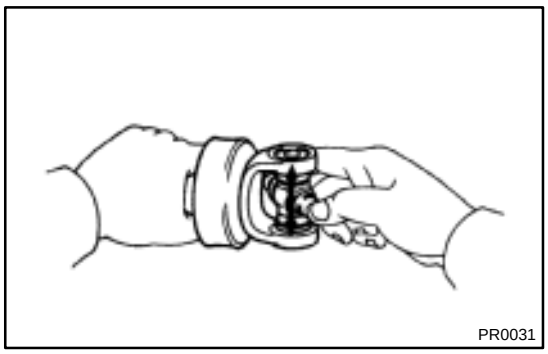
PR0031

8. CHECK SPIDER BEARING

(a) Check that the spider bearing moves smoothly.

(b) Check the spider bearing axial play.

Maximum bearing axial play: 0.05 mm (0.0020 in.)

HINT:

- Install new spider bearings on the shaft side in the procedure described above.
- When replacing the propeller shaft spider on pre runner and rear propeller shaft spider on 4WD vehicles, be sure that the grease fitting assembly hole is facing in the direction shown in the illustration on the next page.

SPIDER GREASE FITTING ASSEMBLY DIRECTION FOR 4WD FRONT PROPELLER SHAFT

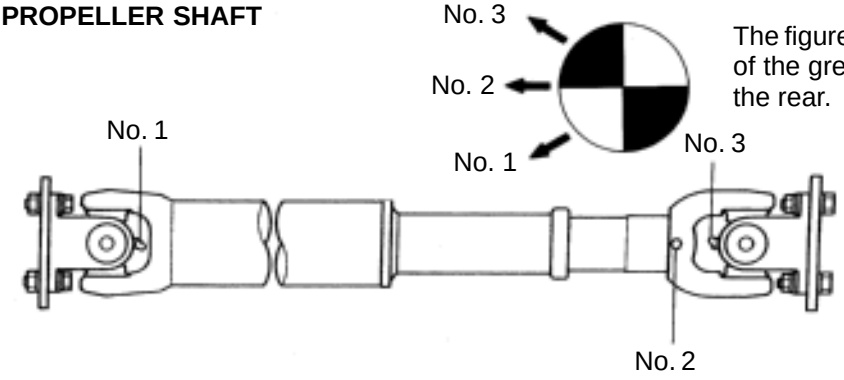

The figure at left shows the locations of the grease fittings as seen from the rear.

SPIDER GREASE FITTING ASSEMBLY DIRECTION FOR PRE RUNNER PROPELLER SHAFT AND 4WD REAR PROPELLER SHAFT
2–joint type:

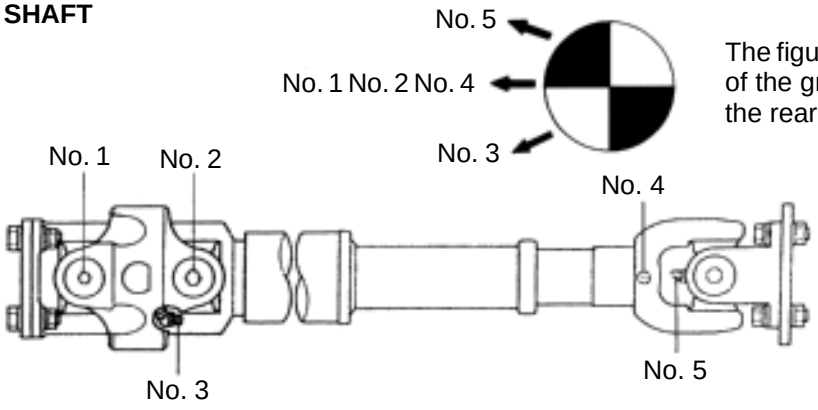

The figure at left shows the locations of the grease fittings as seen from the rear.

SPIDER GREASE FITTING ASSEMBLY DIRECTION FOR PRE RUNNER PROPELLER SHAFT AND 4WD REAR PROPELLER SHAFT
3–joint type:

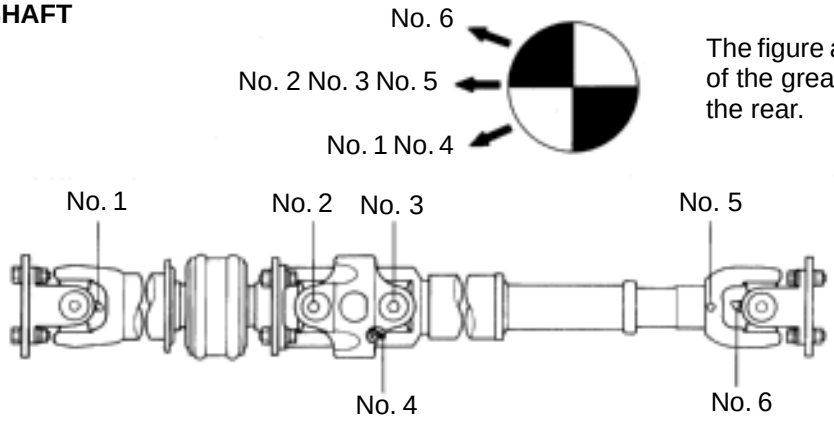

The figure at left shows the locations of the grease fittings as seen from the rear.

Z15305

AIRBAG SENSOR ASSEMBLY

COMPONENTS

RS02F–02

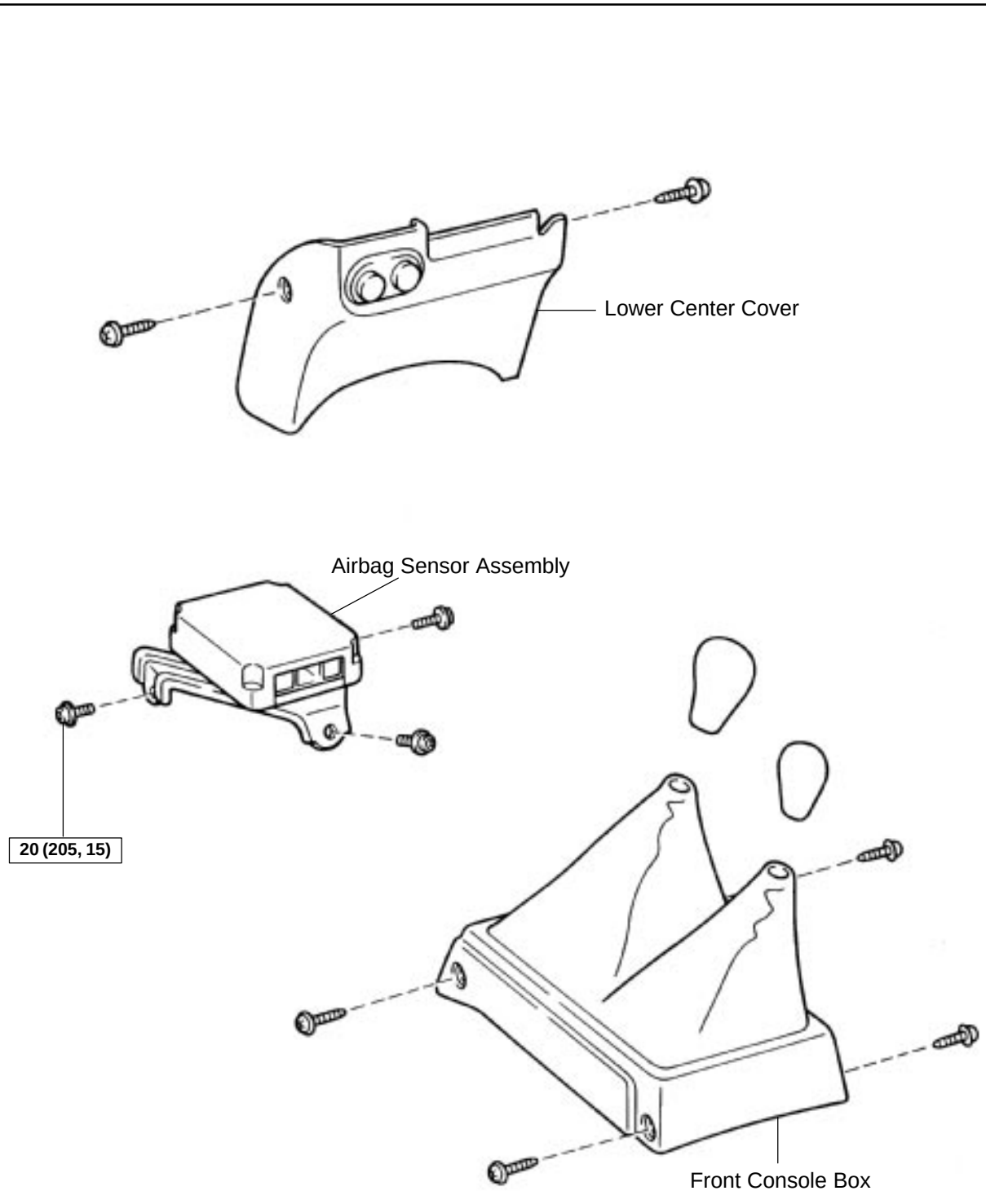

N·m (kgf·cm, ft·lbf) : Specified torque

H01275

RS02H–03

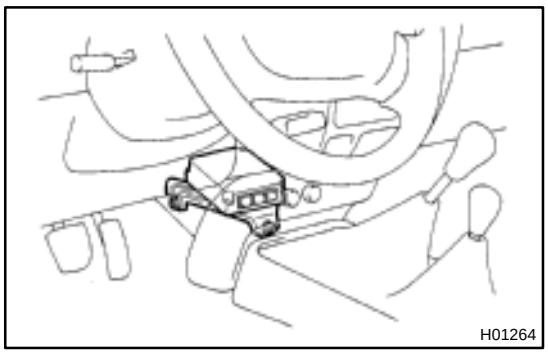

INSPECTION

1. VEHICLES NOT INVOLVED IN COLLISION

Do a diagnostic system check. (See page DI–456)

2. VEHICLES INVOLVED IN COLLISION AND SRS IS NOT DEPLOYED

Do a diagnostic system check. (See page DI–456)

3. VEHICLES INVOLVED IN COLLISION AND SRS IS DEPLOYED

Replace the airbag sensor assembly.

RS02I–03

INSTALLATION

NOTICE:

- **Never use SRS parts from another vehicle. When replacing parts, replace with new parts.**
- **Never reuse the airbag sensor assembly involved in a collision when the airbag has deployed.**
- **Never repair a sensor in order to reuse it.**

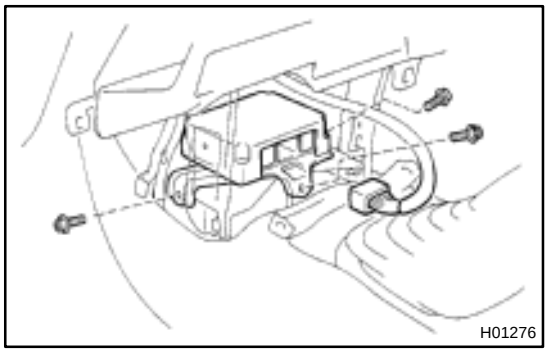

1. INSTALL AIRBAG SENSOR ASSEMBLY

(a) Using a torx wrench, install the airbag sensor assembly with the 3 screws.
Torx wrench: T40 (Part No. 09042–00020 or locally manufactured tool)
Torque: 20 N·m (205 kgf·cm, 15 ft·lbf)

(b) Connect the connector.

NOTICE:

- **Installation of the connector is done after the sensor assembly has been installed.**
- **Make sure the sensor assembly is installed to the specified torque.**
- **If the sensor assembly has been dropped, or there are cracks, dents or other defects in the case, bracket or connector, replace the sensor assembly with a new one.**
- **When installing the airbag sensor assembly, take care that the SRS wiring does not interfere with other parts and is not pinched between other parts.**
- **After installation, shake the sensor assembly to check that there is no looseness.**

2. INSTALL REMOVED PARTS (See page RS–39)

RS02G–03

REMOVAL

NOTICE:

Do not open the cover or the case of the ECU and various electrical devices unless absolutely necessary.

If the IC terminals are touched, the IC may be destroyed by static electricity.

1. REMOVE FRONT CONSOLE BOX

2. REMOVE LOWER CENTER COVER

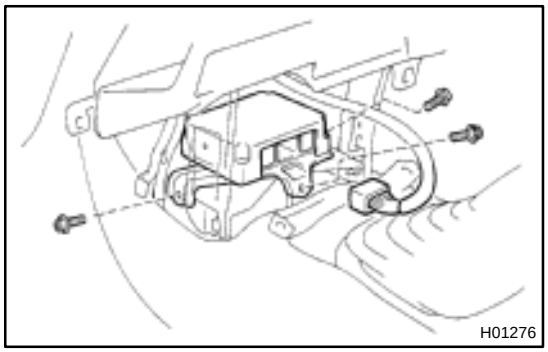

3. REMOVE AIRBAG SENSOR ASSEMBLY

(a) Disconnect the connector.

NOTICE:

Remove the connector with the sensor assembly installed.

(b) Using a torx wrench remove the 3 screws and airbag sensor assembly.

Torx wrench: T40 (Part No. 09042–00020 or locally manufactured tool)

RS01J–14

REPLACEMENT

REPLACEMENT REQUIREMENT

In the following cases, replace the airbag sensor assembly.

- If the SRS has been deployed in a collision.
- If the airbag sensor assembly has been found to be faulty in troubleshooting.
- If the airbag sensor assembly has been dropped.

CAUTION:

For removal and installation of the airbag sensor assembly, see page RS–39 and RS–42, and be sure to follow the correct procedure.

FRONT AIRBAG SENSOR

COMPONENTS

RS01L–16

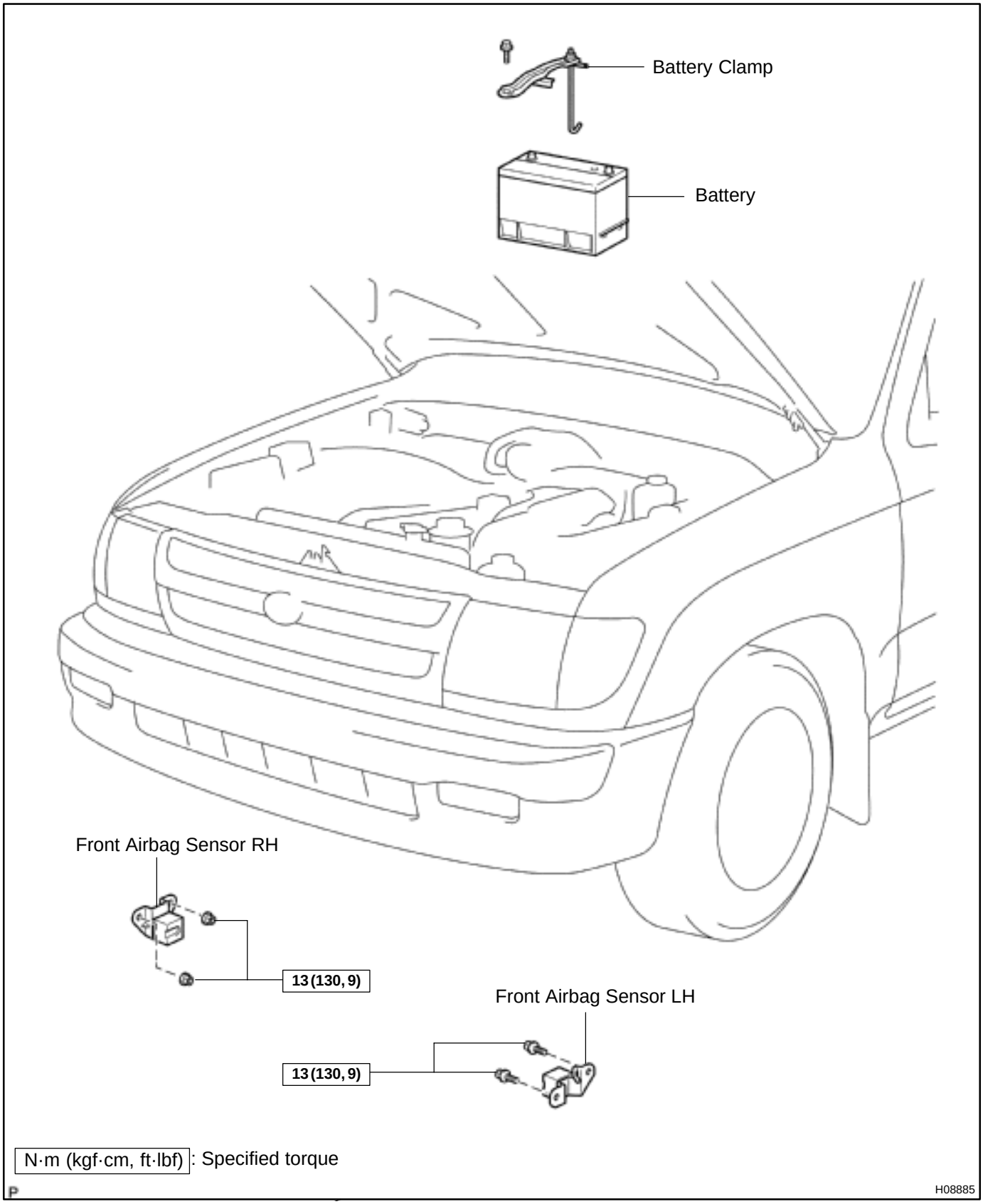

RS01N–18

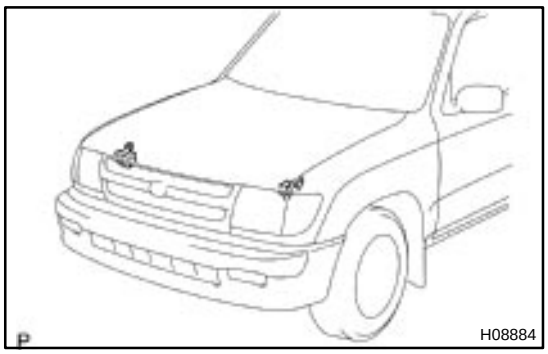

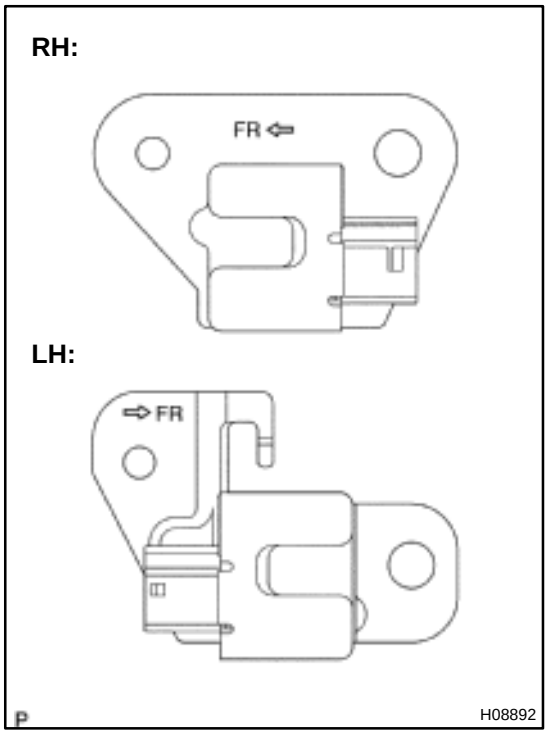

INSPECTION

1. VEHICLES NOT INVOLVED IN COLLISION

Do a diagnostic system check.
(See page DI–456)

2. VEHICLES INVOLVED IN COLLISION

(a) Do a diagnostic system check.
(See page DI–456)

(b) If the front fender of the car or its periphery is damaged, do a visual check for damage to the front airbag sensor, which includes the following items even if the airbag was not deployed:

- Bracket deformation
- Paint peeling off the bracket
- Cracks, dents or chips in the case
- Cracks, dents, chipping and scratches in the connector
- Peeling off of the label or damage to the serial number

RS01P–16

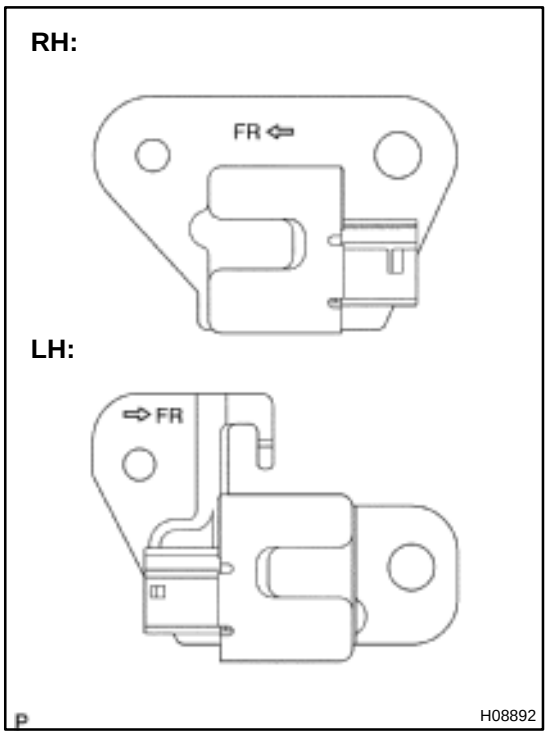

INSTALLATION

1. INSTALL FRONT AIRBAG SENSOR LH AND RH

(a) Install the front airbag sensor with the 2 bolts and 2 nuts with the arrows on the sensors facing toward the front of the vehicle.

Torque: 20 N·m (205 kgf·cm, 15 ft·lbf)

NOTICE:

- **Connection of the connector is done after the sensor has been installed.**
- **Make sure the sensor is installed with the specified torque.**
- **If the sensor has been dropped, or there are cracks, dents or other defects in the case, brackets or connector, replace the removed sensor with new one.**
- **The front sensor is equipped with an electrical connection check mechanism. Be sure to lock this mechanism securely when connecting the connector. If the connector is not securely locked, a malfunction code will be detected by the diagnostic system.**

(b) Connect the front airbag sensor connectors.

2. INSTALL BATTERY

(a) Install the battery carrier and battery.

(b) Install the battery clamp with the bolt.

RS0FV–01

REMOVAL

NOTICE:

- **If the wiring connector of the SRS is disconnected with the ignition switch at ON or ACC position, DTCs will be recorded.**
- **Never use SRS parts from another vehicle. When replacing parts, replace then with new parts.**
- **Never reuse the sensor involved in a collision when the SRS has deployed.**
- **Never repair a sensor in order to reuse it.**

1. REMOVE BATTERY

(a) Remove the bolt and battery clamp.

(b) Remove the battery and battery carrier.

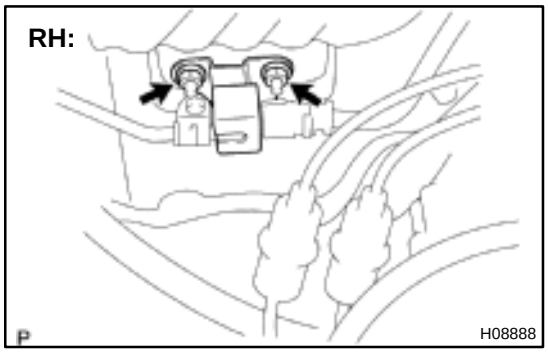

2. REMOVE FRONT AIRBAG SENSOR RH

(a) Disconnect the front airbag sensor connector.

NOTICE:

Disconnect the connector with the front airbag sensor installed.

(b) Remove the 2 nuts and front airbag sensor RH.

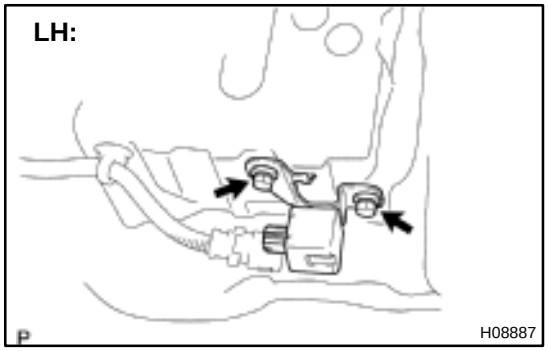

3. REMOVE FRONT AIRBAG SENSOR LH

(a) Disconnect the front airbag sensor connector.

NOTICE:

Disconnect the connector with the front airbag sensor installed.

(b) Remove the 2 bolts and front airbag sensor LH.

RS01O–10

REPLACEMENT

REPLACEMENT REQUIREMENTS

In the following cases, replace the front airbag sensor.

- If the SRS has been deployed in a collision. (Replace both the left and right airbag sensors.)
- If the front airbag sensor has been found to be faulty in troubleshooting.
- If the front airbag sensor has been found to be faulty during checking items.
  (See page RS–45)
- If the front airbag sensor has been dropped.

CAUTION:

For removal and installation of the front airbag sensor, see page RS–44 and RS–47. Be sure to follow the correct procedure.

FRONT PASSENGER AIRBAG ASSEMBLY

RS029–02

COMPONENTS

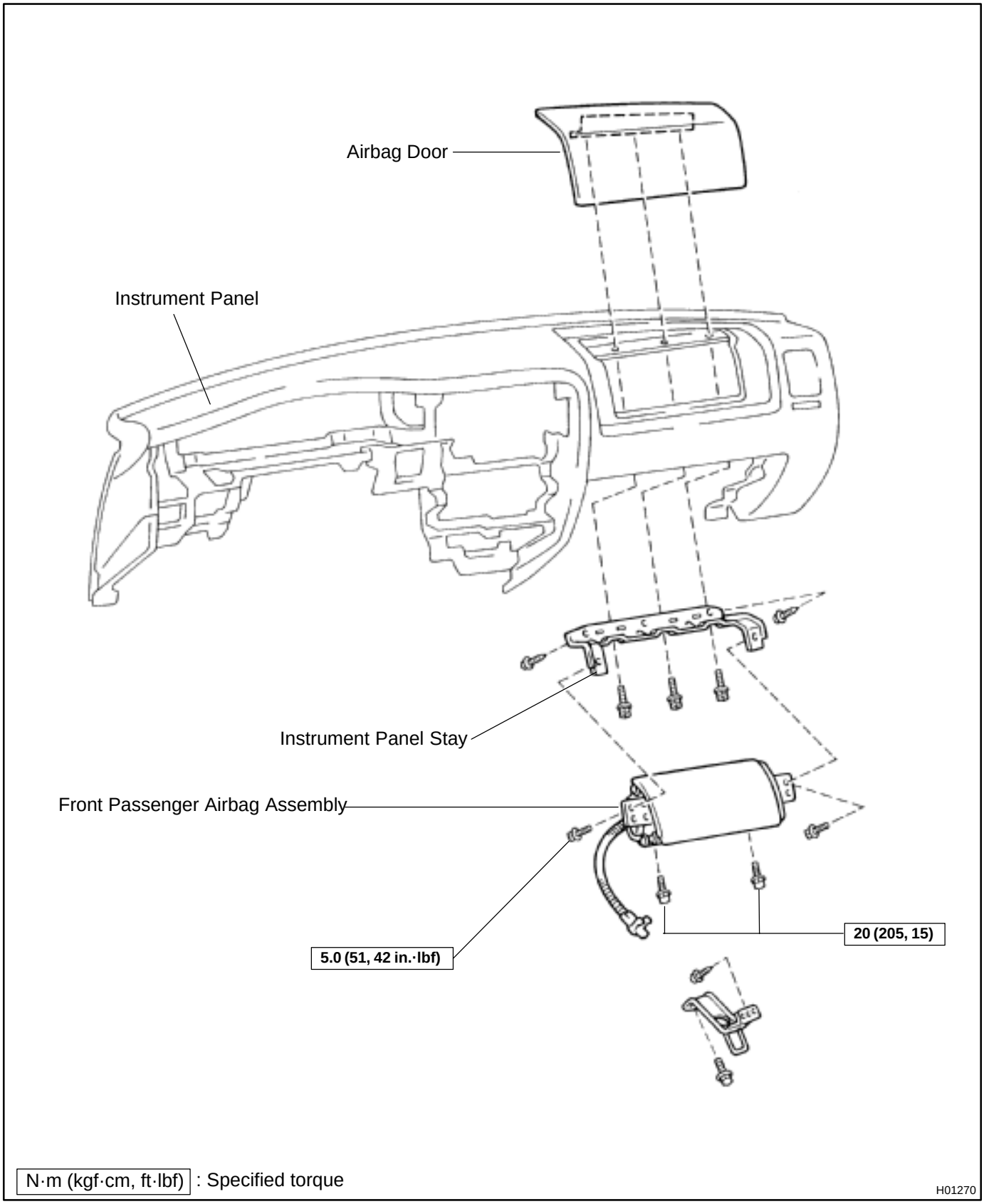

N·m (kgf·cm, ft·lbf) : Specified torque

H01270

RS0FT–02

DISPOSAL

HINT:

When scrapping vehicle equipped with an SRS or disposing of a front passenger airbag assembly, always first deploy the airbag in accordance with the procedure described below. If any abnormality occurs with the airbag deployment, contact the SERVICE DEPT. of TOYOTA MOTOR SALES, U.S.A., INC.

When disposing of a front passenger airbag assembly with an airbag deployed in a collision, follow the same procedure given in step 1–(e) in ”DISPOSAL”.

CAUTION:

- **Never dispose of a front passenger airbag assembly which has an undeployed airbag.**
- **The airbag produces a sizeable exploding sound when it deploys, so perform the operation out–of–doors and where it will not create a nuisance to nearby residents.**



- **When deploying the airbag, always use the specified SST (SRS Airbag Deployment Tool). Perform the operation in a place away from electrical noise.**
  SST 09082–00700
- **When deploying an airbag, perform the operation at least 10 m (33 ft) away from the front passenger airbag assembly.**
- **The front passenger airbag assembly is very hot when the airbag is deployed, so leave it alone for at least 30 minutes after deployment.**
- **Use gloves and safety glasses when handling a front passenger airbag assembly with deployed airbag.**
- **Always wash your hands with water after completing the operation.**
- **Do not apply water, etc. to a front passenger airbag assembly with deployed airbag.**

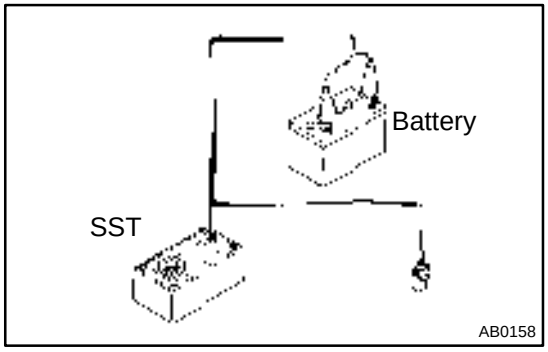

1. AIRBAG DEPLOYMENT WHEN SCRAPPING VEHICLE

HINT:

Have a battery ready as the power source to deploy the airbag.



(a) Confirm functioning of the SST.

CAUTION:

When deploying the airbag, always use the specified SST: SRS Airbag Deployment Tool.

SST 09082–00700

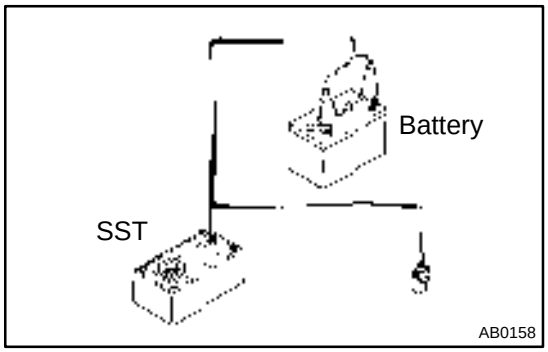

(1) Connect the SST to the battery.
Connect the red clip of the SST to the battery positive (+) terminal and the black clip to the battery negative (–) terminal.

HINT:

Do not connect the yellow connector which will be connected with the supplemental restraint system.

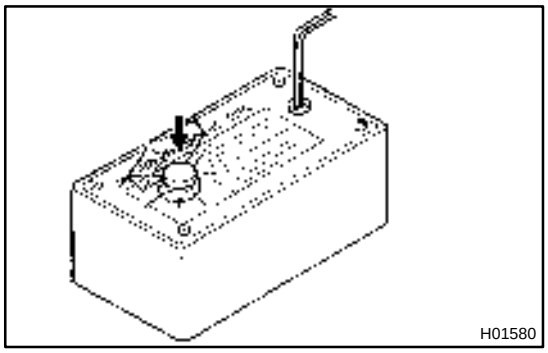

(2) Confirm functioning of the SST.
Press the SST activation switch, and confirm the LED of the SST activation switch lights up.

CAUTION:

If the LED lights up when the activation switch is not being pressed, SST malfunction is probable, so definitely do not use the SST.

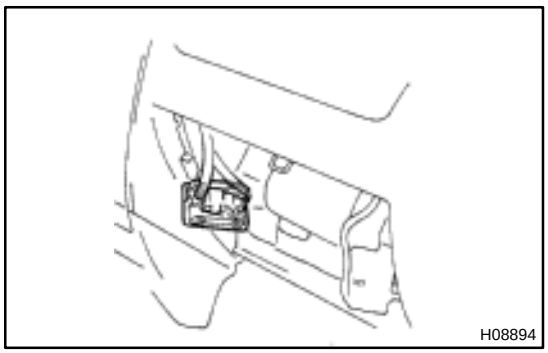

(b) Disconnect the airbag connector.
(1) Remove the glove compartment door.

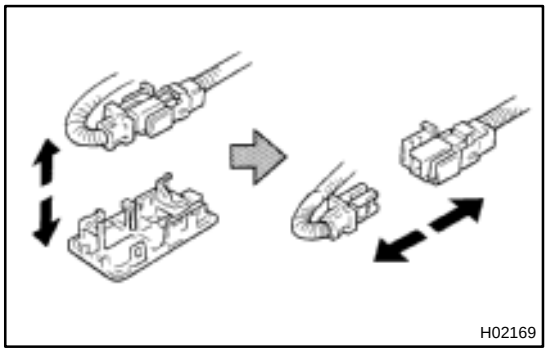

(2) Disconnect the airbag connector.

NOTICE:

When handling the airbag connector, take care not to damage the airbag wire harness.

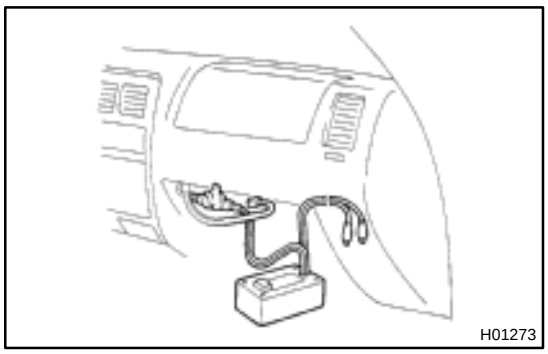
H01273

(c) Install the SST.

(1) Connect the SST connector to the front passenger airbag assembly connector.

SST 09082–00700, 09082–00760

NOTICE:

To avoid damaging the SST connector and wire harness, do not lock the secondary lock of the twin lock.

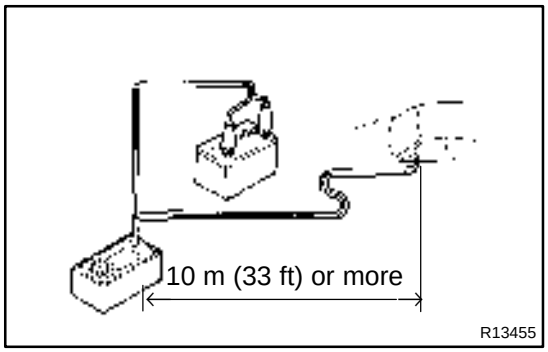

R13455

(2) Move the SST to at least 10 m (33 ft) from the front of the vehicle.

(3) Close all the doors and windows of the vehicle.

NOTICE:

Take care not to damage the SST wire harness.

(4) Connect the SST red clip to the battery positive (+) terminal and the black clip to the negative (–) terminal.

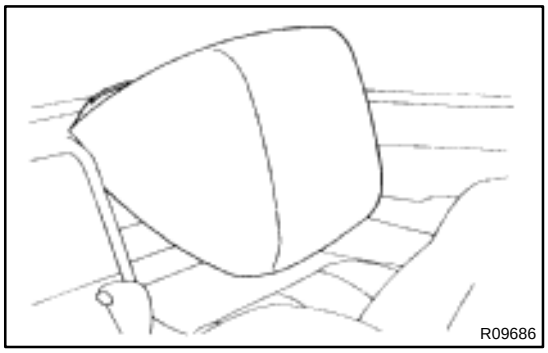
R09686

(d) Deploy the airbag.

(1) Confirm that no–one is inside the vehicle or within 10 m (33 ft) area around the vehicle.

(2) Press the SST activation switch and deploy the airbag.

HINT:

The airbag deploys simultaneously as the LED of the SST activation switch lights up.

(e) Dispose of the front passenger airbag assembly.

CAUTION:

- **The front passenger airbag assembly is very hot when the airbag is deployed, so leave it alone for at least 30 minutes after deployment.**
- **Use gloves and safety glasses when handling a front passenger airbag assembly with deployed airbag.**
- **Always wash your hands with water after completing the operation.**
- **Do not apply water, etc. to a front passenger airbag assembly with deployed airbag.**

(1) When scrapping a vehicle, deploy the airbag and scrap the vehicle with the front passenger airbag assembly still installed.

(2) When moving a vehicle for scrapping which has a front passenger airbag assembly with deployed airbag, use gloves and safety glasses.

2. DEPLOYMENT WHEN DISPOSING OF FRONT PASSENGER AIRBAG ASSEMBLY ONLY

NOTICE:

- **When disposing of the front passenger airbag assembly only, never use the customer's vehicle to deploy the airbag.**
- **Be sure to follow the procedure given below when deploying the airbag.**

HINT:

Have a battery ready as the power source to deploy the airbag.

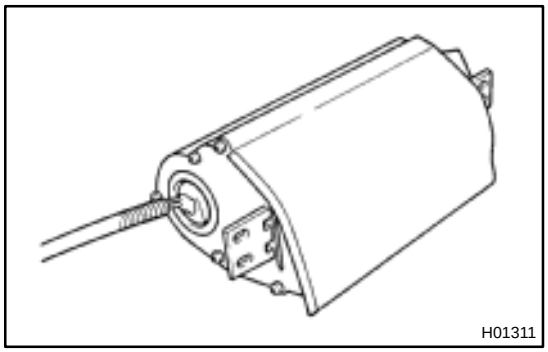

(a) Remove the front passenger airbag assembly (See page RS–26).

CAUTION:

- **When removing the front passenger airbag assembly, work must be started after 90 seconds from the time the ignition switch is turned to the "LOCK" position and the negative (–) terminal cable is disconnected from the battery.**
- **Store the front passenger airbag assembly with the airbag deployment direction facing upward.**

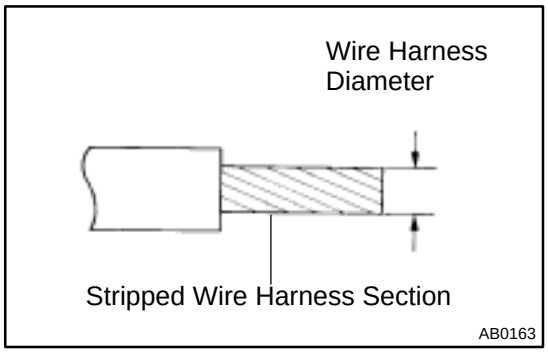

(b) Fix the front passenger airbag assembly to tire.

Using a service–purpose wire harness for the vehicle, tie down the front passenger airbag assembly to the tire.

Wire harness: Stripped wire harness section 1.25 mm^2 or more (0.0019 $in.^2$ or more)

HINT:

To calculate the square of the stripped wire harness section:

Square = 3.14 X (Diameter)^2 divided by 4

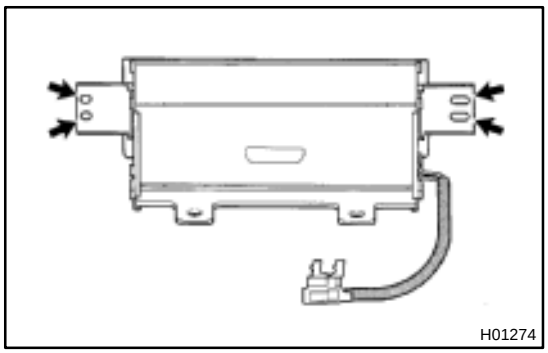

CAUTION:

If the front passenger airbag assembly is tied down with too thin wire harness, it may snap. This is highly dangerous. Always use a wire harness for vehicle use which is at least 1.25 mm^2 (0.0019 $in.^2$).

(1) Wind the wire harness around the tire, passing the wire harness through the installation holes indicated by arrows in the installation.

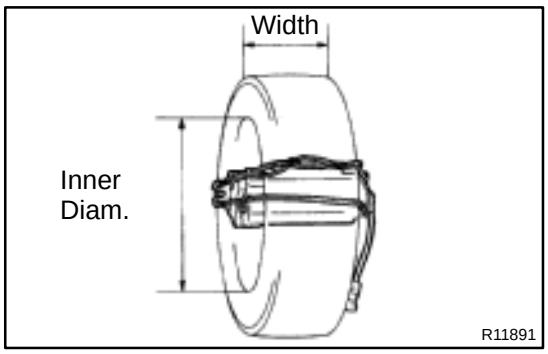

(2) Position the front passenger airbag assembly inside the tire with the airbag deployment direction facing inside.

Tire size: Must exceed the following dimensions–
Width: 185 mm (7.28 in.)
Inner diameter: 360 mm (14.17 in.)

CAUTION:

- **Make sure that the wire harness is tight. It is very dangerous if looseness in the wire harness results in the front passenger airbag assembly coming free due to the shock of the airbag deploying.**
- **Always tie down the front passenger airbag assembly with the airbag door facing inside.**

NOTICE:

The tire will be marked by the airbag deployment, so use a redundant tire.

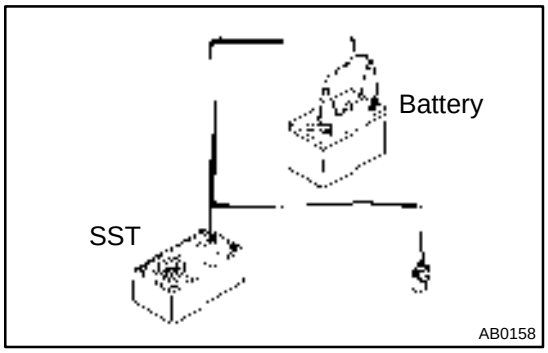

(c) Confirm functioning of the SST.
SST 09082–00700

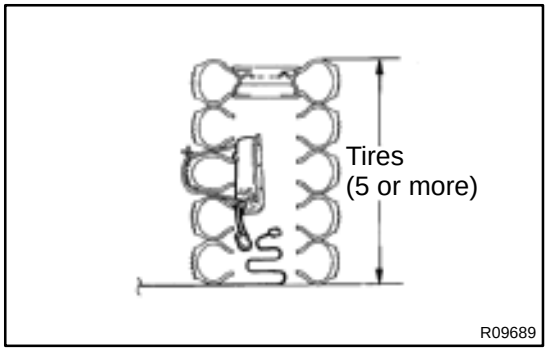

(d) Place tires.
(1) Place at least 2 tires under the tire to which the front passenger airbag assembly is tied.
(2) Place at least 2 tires over the tire to which the front passenger airbag assembly is tied. The top tire should have the wheel installed.

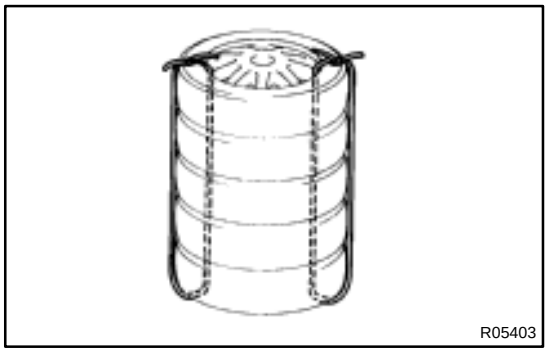

(3) Tie the tires together with 2 wire harnesses.

CAUTION:

Make sure that the wire harnesses are tight. It is very dangerous if loose wire harnesses result in the tires coming free due to the shock of the airbag deploying.

HINT:

Place the SST connector and wire harness inside tires. Provide at least 1 m (3 ft) of slack for the wire harness.

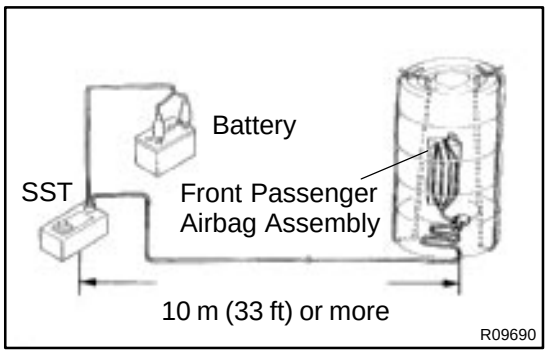

(e) Install the SST.
Connect the SST connector to the front passenger airbag assembly connector.
SST 09082–00700, 09082–00760

NOTICE:

To avoid damaging the SST connector and wire harness, do not lock the secondary lock of the twin lock.

(f) Deploy the airbag.
(1) Connect the SST red clip to the battery positive (+) terminal and the black clip to the battery negative (–) terminal.
(2) Confirm that no–one is within 10 m (33 ft) area around the tire which the front passenger airbag assembly is tied to.
(3) Press the SST activation switch and deploy the airbag.

HINT:
The airbag deploys simultaneously as the LED of the SST activation switch lights up.



(g) Dispose of the front passenger airbag assembly.

CAUTION:

- **The front passenger airbag assembly is very hot when the airbag is deployed, so leave it alone for at least 30 minutes after deployment.**
- **Use gloves and safety glasses when handling a front passenger airbag assembly with deployed airbag.**
- **Always wash your hands with water after completing the operation.**
- **Do not apply water, etc. to a front passenger airbag assembly with deployed airbag.**

(1) Remove the front passenger airbag assembly from the tire.
(2) Place the front passenger airbag assembly in a vinyl bag, tie the end tightly and dispose of it in the same way as other general parts.

RS02B–03

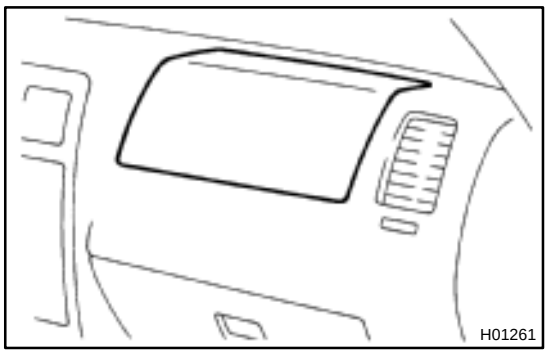
H01261

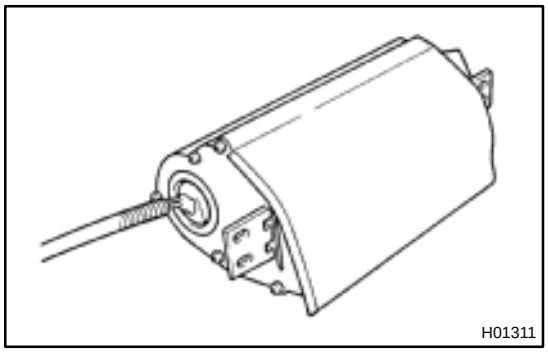
H01311

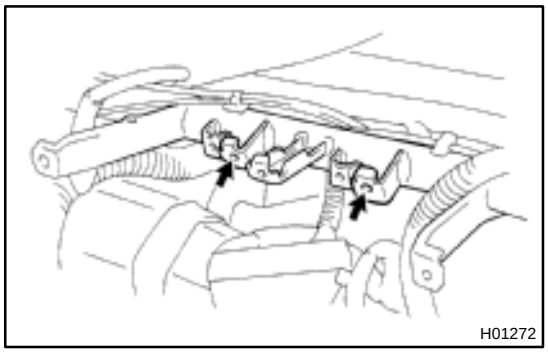
H01272

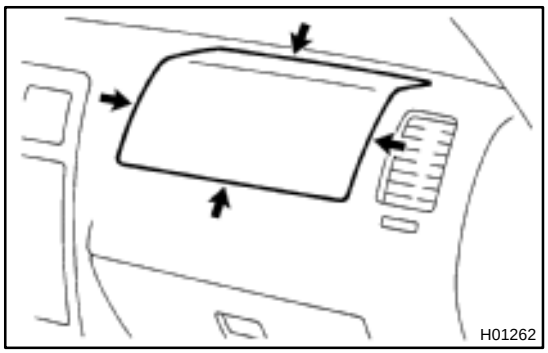
H01262

INSPECTION

1. VEHICLE NOT INVOLVED IN COLLISION

(a) Do a diagnostic system check.
(See page DI–456)

(b) Do a visual check which includes the following items with the front passenger airbag assembly installed in the vehicle.
Check for cuts, minute cracks or marked discoloration of the front passenger airbag door.

2. VEHICLE INVOLVED IN COLLISION AND AIRBAG IS NOT DEPLOYED

(a) Do a diagnostic system check.
(See page DI–456)

(b) Do a visual check which includes the following items with the front passenger airbag assembly removed from the vehicle.
- Check for cuts and cracks in, or marked discoloration of the front passenger airbag door.
- Check for cuts and cracks in wire harnesses, and for chipping in connectors.
- Check for deformation of the instrument panel and instrument panel reinforcement.

HINT:
- If the instrument panel or instrument panel reinforcement is deformed, never repair it. Always replace it with a new one.
- There should be no interference between the instrument panel and front passenger airbag door, or the glove compartment door and front passenger airbag door. The clearance should be uniform all the way around when the new airbag assembly is installed on the instrument panel.

CAUTION:
For removal and installation of the front passenger airbag assembly, see page RS–26 and RS–36 and be sure to follow the correct procedure.

3. VEHICLE INVOLVED IN COLLISION AND AIRBAG IS DEPLOYED

(a) Do a diagnostic system check.
(See page DI–456)

(b) Do a visual check which includes the following items with the airbag assembly removed from the vehicle.
- Check for deformation of the instrument panel, instrument panel reinforcement and glove compartment door.
- Check for damage to the connector and wire harness.

HINT:
- If the instrument panel or instrument panel reinforcement is deformed, never repair it. Always replace it with a new one.
- There should be no interference between the instrument panel and front passenger airbag door, or the glove compartment and front passenger airbag door. The clearance should be uniform all the way around when the new airbag assembly is installed on the instrument panel.

RS0FU–01

INSTALLATION

NOTICE:

Never use airbag parts from another vehicle. When replacing parts, replace with new parts.

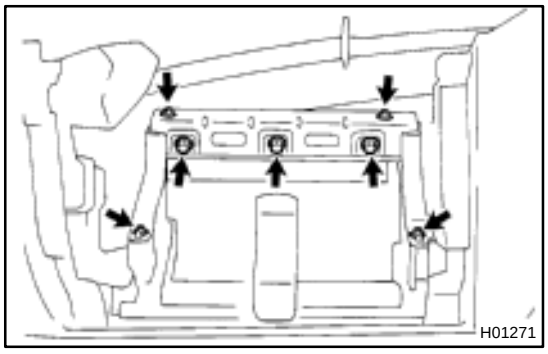

1. INSTALL FRONT PASSENGER AIRBAG ASSEMBLY

(a) Install the airbag door and instrument panel stay to the instrument panel.

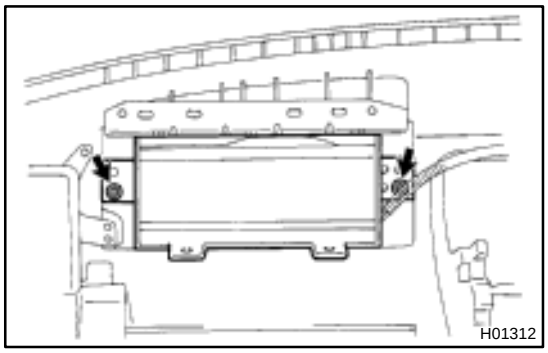

(b) Install the front passenger airbag assembly to the instrument panel.

CAUTION:

Make sure that no foreign objects are trapped between the airbag door and bag, and within the module.

NOTICE:

If the front passenger airbag assembly has been dropped, or there are cracks, dents or other defects in the case or connector, replace the front passenger airbag assembly with a new one.

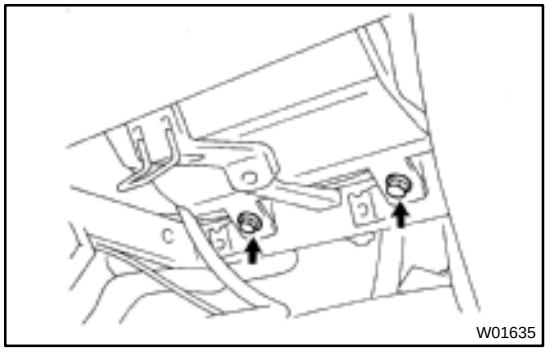

2. INSTALL INSTRUMENT PANEL (See page BO–52)

Install the 2 bolts to instrument panel reinforcement.

Torque: 20 N·m (205 kgf·cm, 15 ft·lbf)

NOTICE:

- **Make sure the front passenger airbag assembly is installed to the specified torque.**
- **When installing the instrument panel, take care that the airbag wire harness does not interfere with other parts and is not pinched between other parts.**

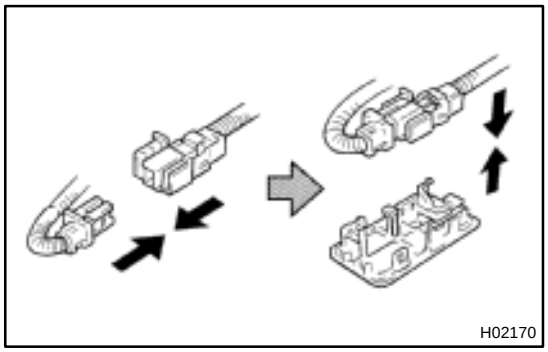

3. CONNECT AIRBAG CONNECTOR

(a) Connect the airbag connector.

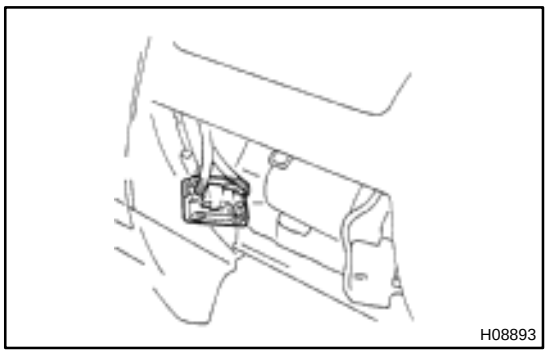

(b) Install the glove compartment door.

RS0FS–01

REMOVAL

NOTICE:

If the wiring connector of the SRS is disconnected with the ignition switch at ON or ACC, diagnostic trouble codes will be recorded.

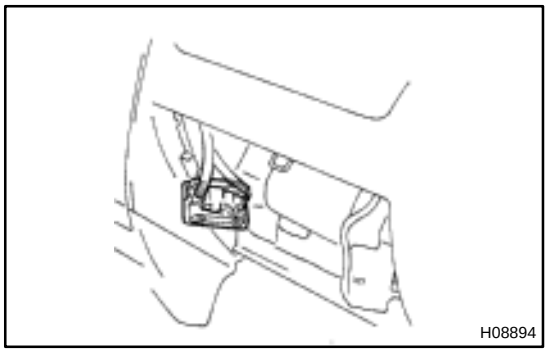

1. DISCONNECT AIRBAG CONNECTOR

(a) Remove the glove compartment door.

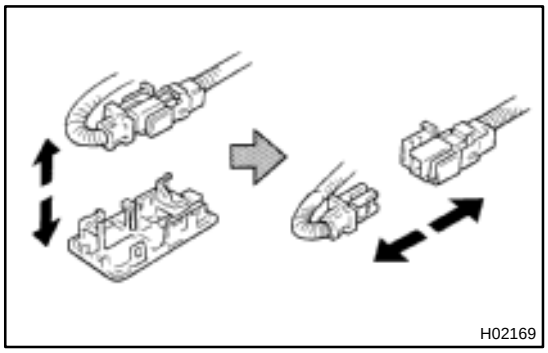

(b) Disconnect the airbag connector.

NOTICE:

When handling the airbag connector, take care not to damage the airbag wire harness.

2. REMOVE INSTRUMENT PANEL

(See page BO–47)

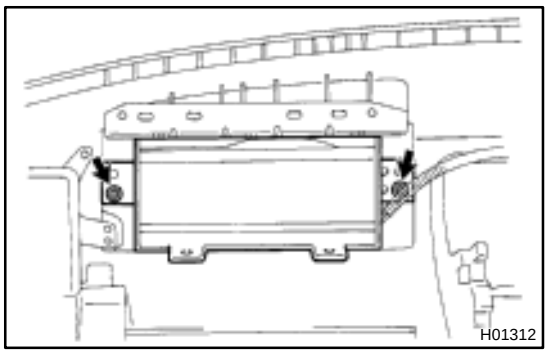

3. REMOVE FRONT PASSENGER AIRBAG ASSEMBLY

(a) Remove the 2 bolts and front passenger airbag assembly.

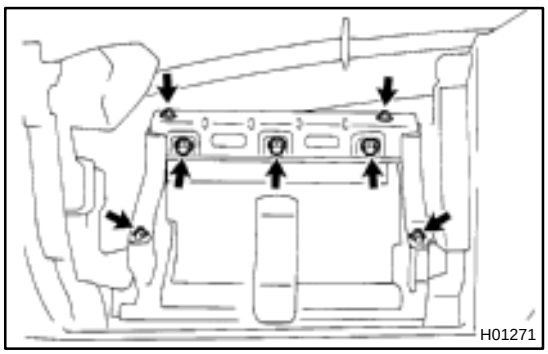

(b) Remove the 3 bolts, 2 screws and the instrument panel stay.

(c) Remove the airbag door.

CAUTION:

- **Do not store the front passenger airbag assembly with the airbag deployment direction facing downward.**
- **Never disassemble the front passenger airbag assembly.**

RS02D–04

REPLACEMENT

REPLACEMENT REQUIREMENTS

In the following cases, replace the front passenger airbag assembly, instrument panel or instrument panel reinforcement.

Case	Replacing part
If the airbag has been deployed.	Front passenger airbag assembly
If the front passenger airbag assembly has been found to be faulty in trouble-shooting.	Front passenger airbag assembly
If the front passenger airbag assembly has been found to be faulty during checking items (See page RS–27).	Front passenger airbag assembly
If the instrument panel has been found to be faulty during checking items (See page RS–27).	Instrument panel
If the instrument panel reinforcement has been found to be faulty during checking items (See page RS–27).	Instrument panel reinforcement
If the front passenger airbag assembly has been dropped.	Front passenger airbag assembly

CAUTION:

For replacement of the front passenger airbag assembly, see page RS–26 and RS–36. Be sure to follow the correct procedure.

RS0FR–02

OPERATION

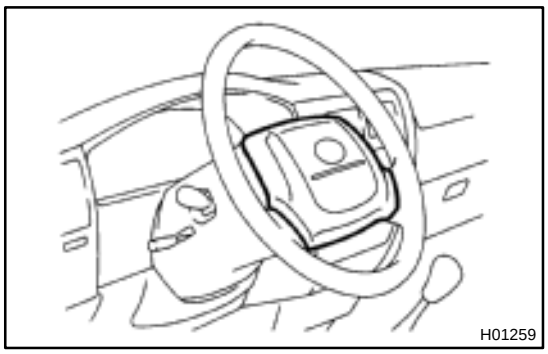

1. STEERING WHEEL PAD (with AIRBAG)

The inflater and bag of the SRS are stored in the steering wheel pad and cannot be disassembled. The inflater contains a squib, igniter charge, gas generant, etc., and inflates the bag when instructed by the airbag sensor assembly.

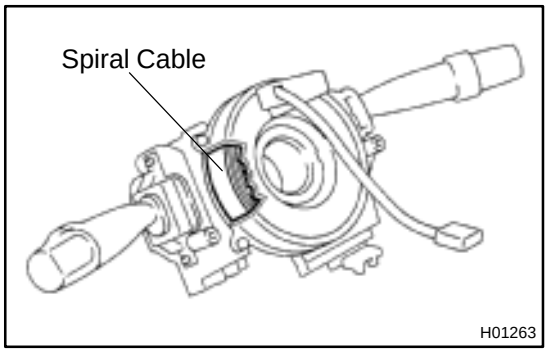

2. SPIRAL CABLE (in COMBINATION SWITCH)

A spiral cable is used as an electrical joint from the vehicle body side to the steering wheel.

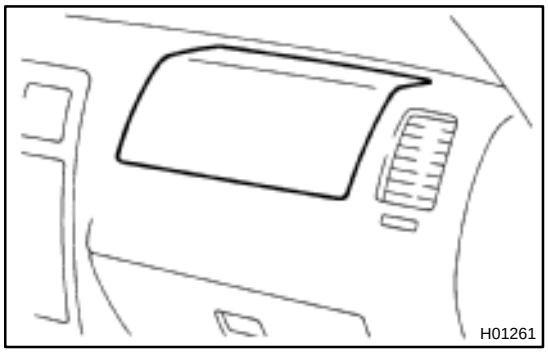

3. FRONT PASSENGER AIRBAG ASSEMBLY

The inflater and bag of the SRS are stored in the front passenger airbag assembly and cannot be disassembled. The inflater contains a squib, igniter charge and gas generant, etc., and inflates the bag when instructed by the airbag sensor assembly.

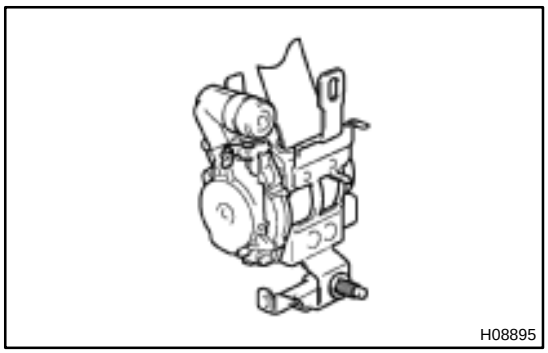

4. SEAT BELT PRETENSIONER

The seat belt pretensioner system is a component of the front seat outer belt. The pretensioner contains a squib, gas generant, strip, etc., and operates in the event of a frontal collision.

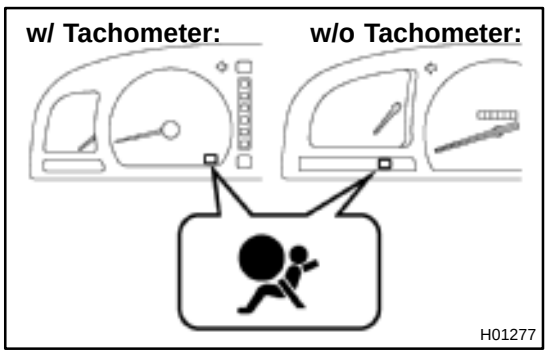

5. SRS WARNING LIGHT

The SRS warning light is located on the combination meter. It goes on to alert the driver of trouble in the system when a malfunction is detected in the airbag sensor assembly self–diagnosis. In normal operating conditions when the ignition switch is turned to the ACC or ON position, the light goes on for about 6 seconds and then goes off.

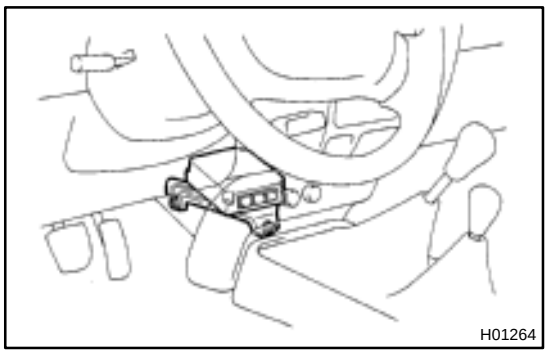

6. AIRBAG SENSOR ASSEMBLY

The airbag sensor assembly is mounted on the floor inside the center cluster. The airbag sensor assembly consists of a airbag sensor, safing sensor, diagnosis circuit, ignition control and drive circuit, etc.

It receives signals from the airbag sensor assembly and judges whether the SRS must be activated or not and diagnosis system malfunctions.

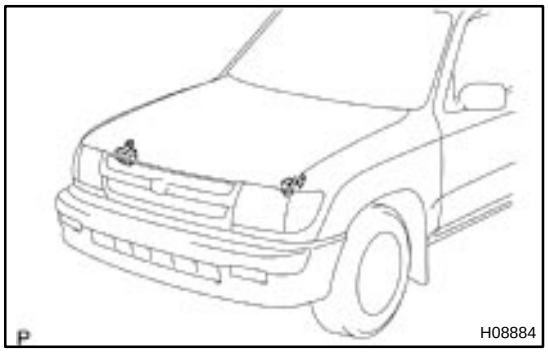

7. FRONT AIRBAG SENSOR

The front airbag sensor is mounted inside each of the aprons. The sensor unit is a mechanical type. When the sensor detects deceleration force above a predetermined limit, contact is made in the sensor, sending a signal to the airbag sensor assembly. The sensor cannot be disassembled.

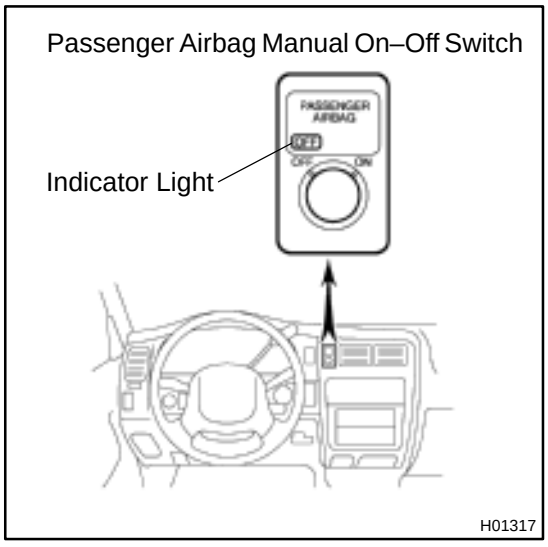

8. PASSENGER AIRBAG MANUAL ON–OFF SWITCH

Passenger airbag manual on–off switch is mounted on the center cluster finish panel. By turning the passenger airbag manual on–off switch to OFF with the ignition key, the passenger airbag system can be disabled. Also, in order to notify the passenger that the passenger airbag is disabled, OFF indicator inside the switch will light up.

Switch Position	Passenger Airbag	Indicator Light
ON	Operative	OFF
OFF	Disabled	ON

9. SRS CONNECTORS

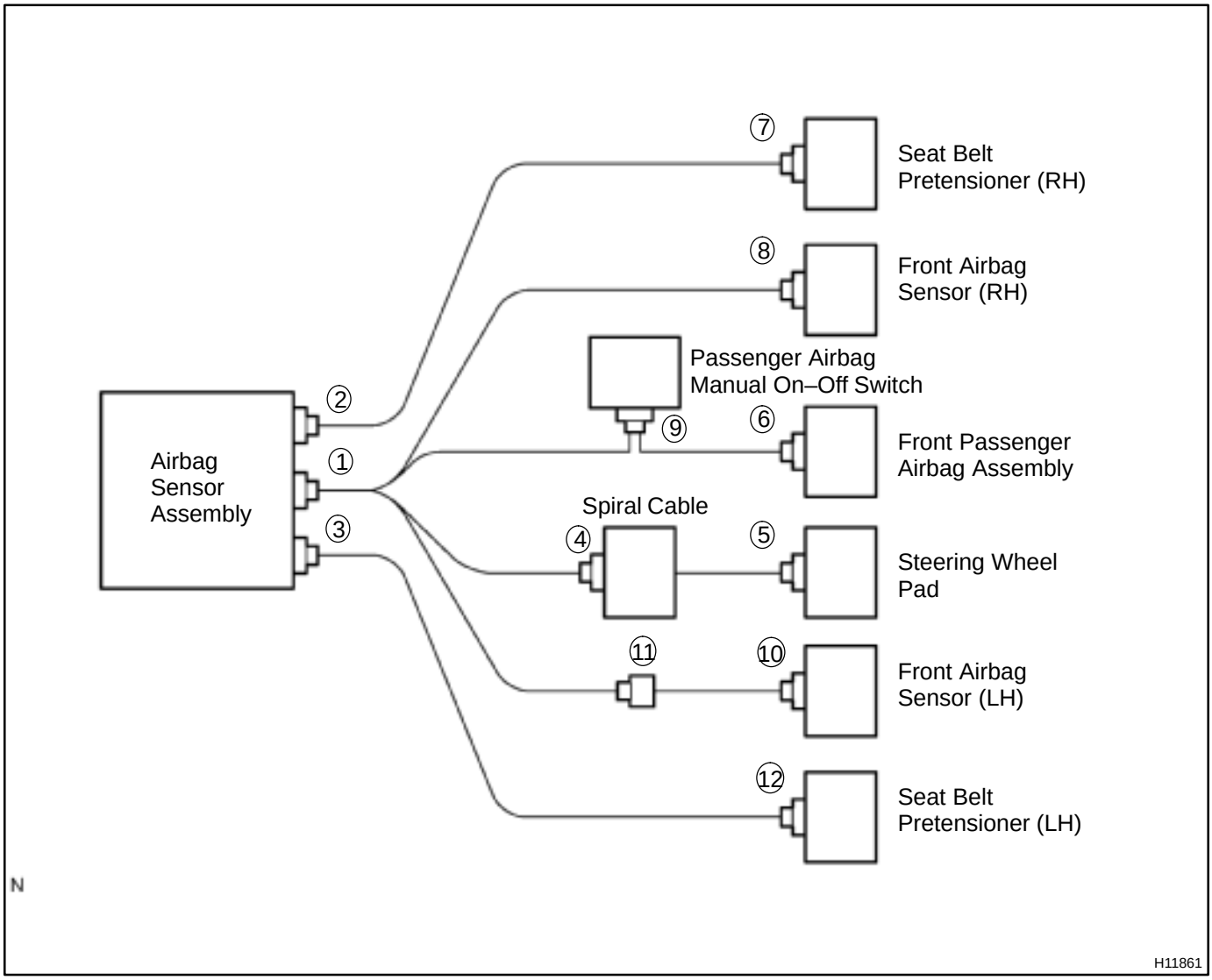

No.	Item	Application
(1)	Terminal Twin–Lock Mechanism	Connectors 1, 2, 3, 4, 5, 6, 7, 8, 9, 10, 11, 12,
(2)	Airbag Activation Prevention Mechanism	Connectors 1, 2, 3, 4, 5, 6, 7, 9, 12,
(3)	Electrical Connection Check Mechanism	Connectors 1, 2, 3
(4)	Connector Twin–Lock Mechanism	Connectors 4, 9

(a) All connectors in the SRS are colored in yellow to distinguish them from other connectors. Connectors having special functions and specifically designed for SRS are used in the locations shown above to ensure high reliability. These connectors use durable gold–plated terminals.

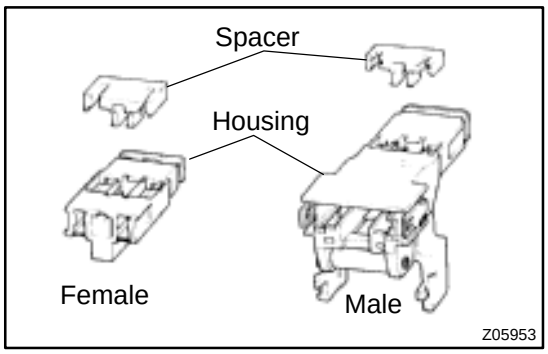

(1) Terminal Twin–Lock Mechanism:
Each connector has a two–piece construction consisting of a housing and a spacer. This design enables the terminal to be locked securely by two locking devices (the spacer and the lance) to prevent terminals from coming out.

(2) Airbag Activation Prevention Mechanism:
Each connector contains a short spring plate. When the connector is disconnected, positive (+) terminal and negative (–) terminal of the squib are attached.

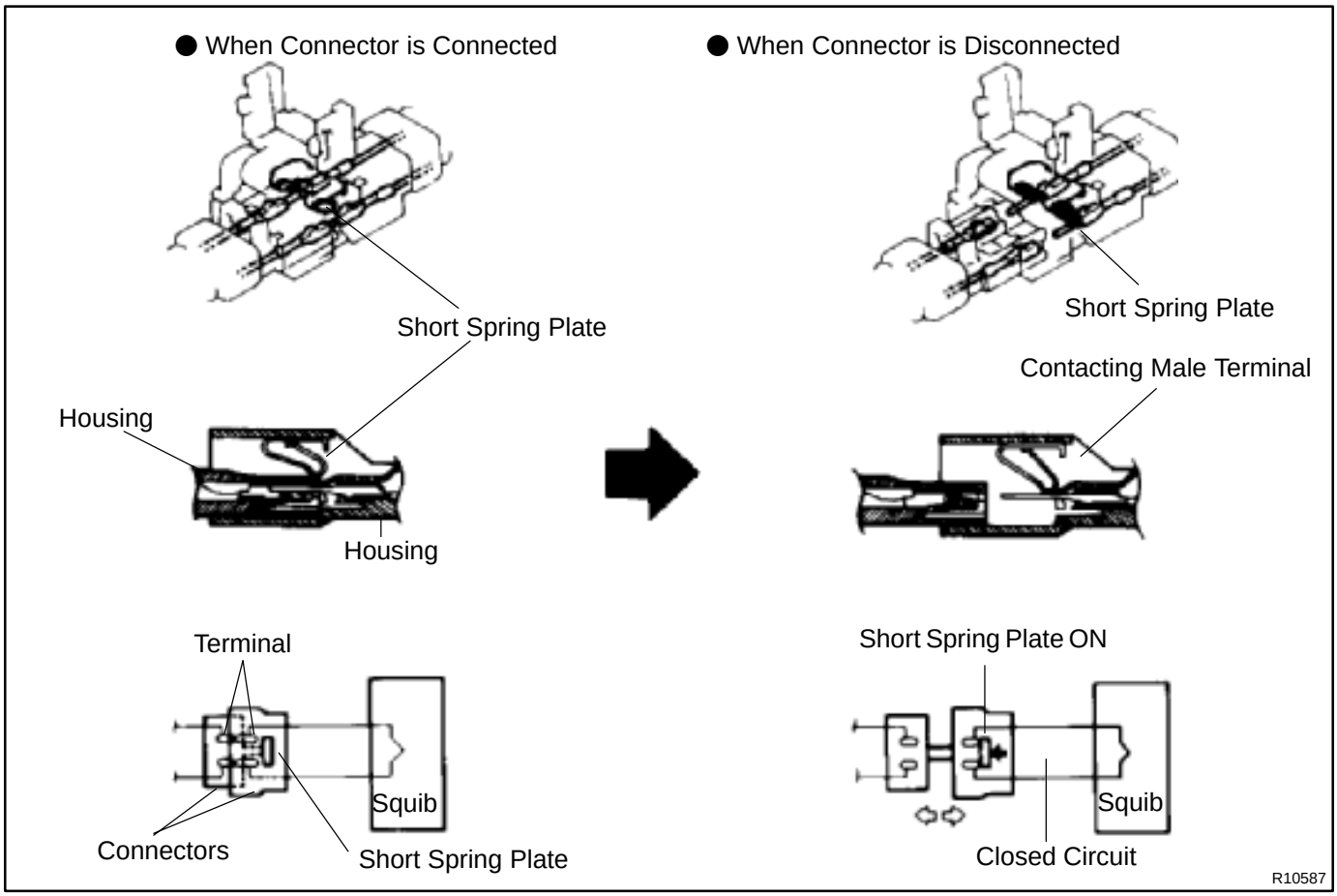

HINT:
The type of connector is shown in the diagram on the previous page.

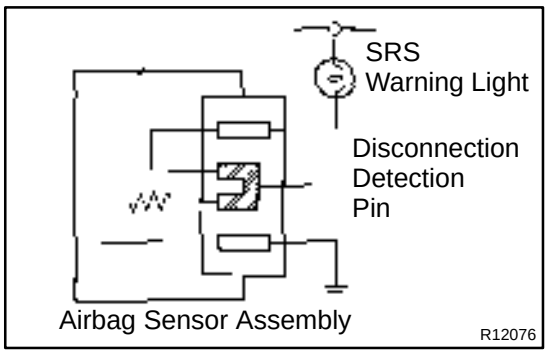

(3) Electrical Connection Check Mechanism:
This mechanism is designed to electrically check if connectors are connected correctly and completely. The electrical connection check mechanism is designed so that the connection detection pin connects with the diagnosis terminals when the connector housing lock is in the locked condition.

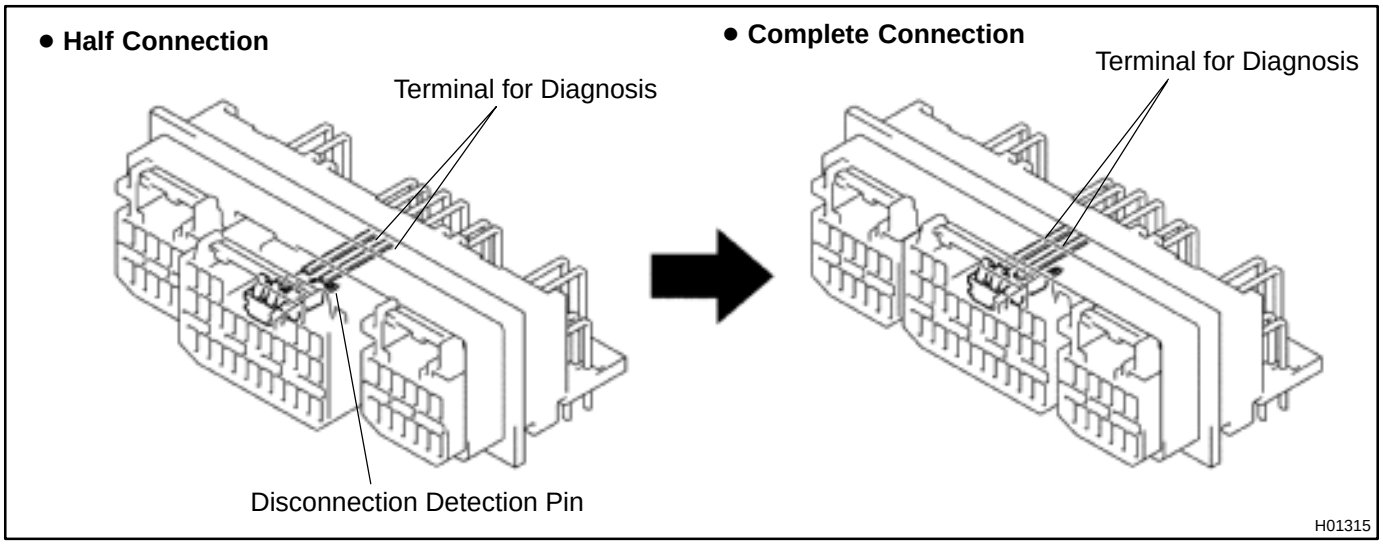

HINT:
The illustration shows connectors ”1”, ”2” and ”3” in step 9.

(4) Connector Twin–Lock Mechanism:
With this mechanism connectors (male and female connectors) are locked by two locking devices to increase connection reliability.

If the primary lock is incomplete, ribs interfere and prevent the secondary lock.

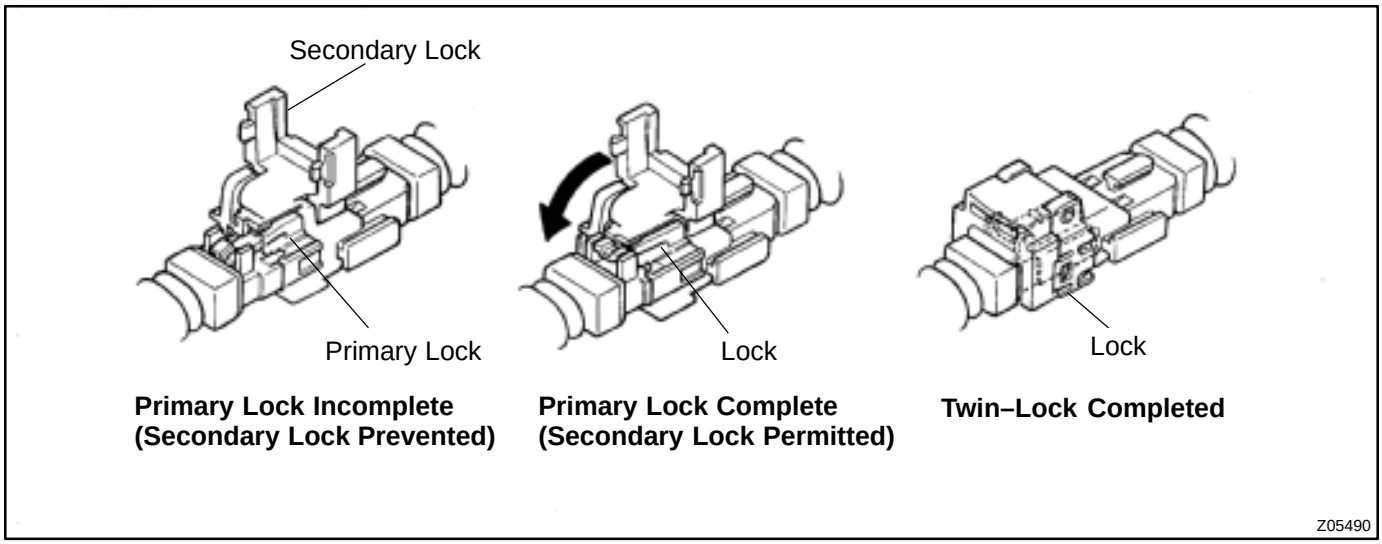

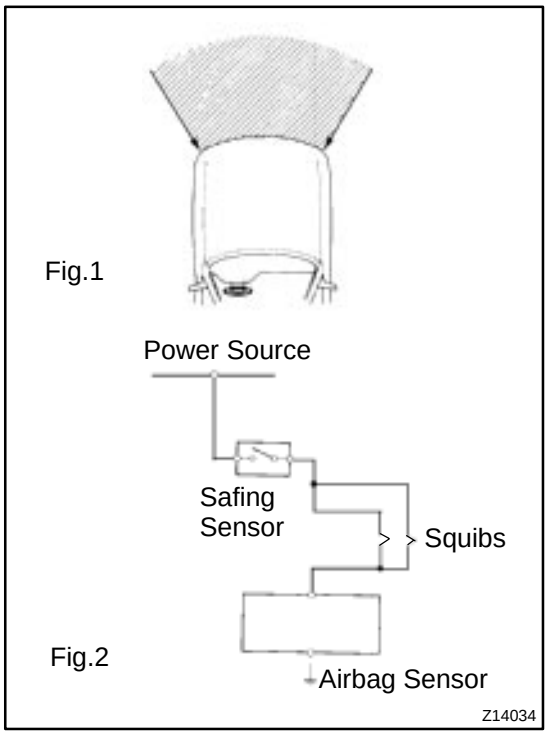

(b) When the vehicle is involved in a frontal collision in the hatched area (Fig. 1) and the shock is larger than a predetermined level, the SRS is activated automatically. A safing sensor is designed to go on at a smaller deceleration rate than the airbag sensors. As illustrated in Fig. 2, ignition is caused when a safing sensor and the airbag sensor go on simultaneously. When a deceleration force acts on the sensors, two squibs in the driver airbag and front passenger airbag ignite and generate gas. The gas discharging into the driver and front passenger airbags rapidly increases the pressure inside the bags breaking open the steering wheel pad and instrument panel door. Bag inflation then ends, and the bags deflate as the gas is discharged through discharge holes at the bag's rear or side.

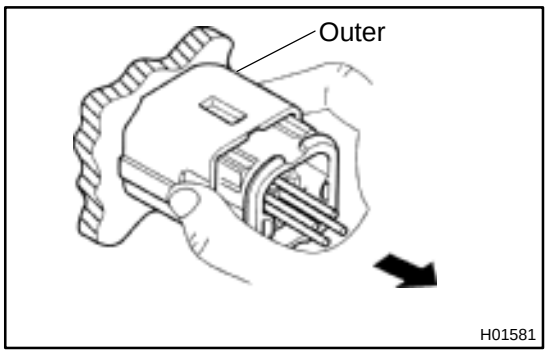

10. DISCONNECTION OF CONNECTORS FOR FRONT AIRBAG SENSOR

(a) While holding both flank sides of the outer, slide the outer to the direction shown by an arrow.

(b) Lock of the connectors is released, then disconnect the connectors.

HINT:

Make sure to hold both flank sides of the outer. If holding the top and bottom sides, it will obstruct disconnection.

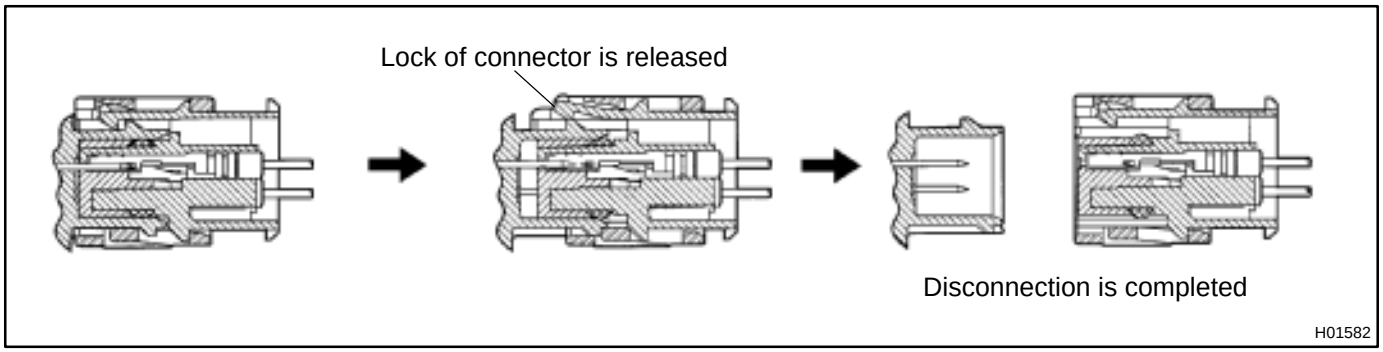

11. CONNECTION OF CONNECTORS FOR FRONT AIRBAG SENSOR

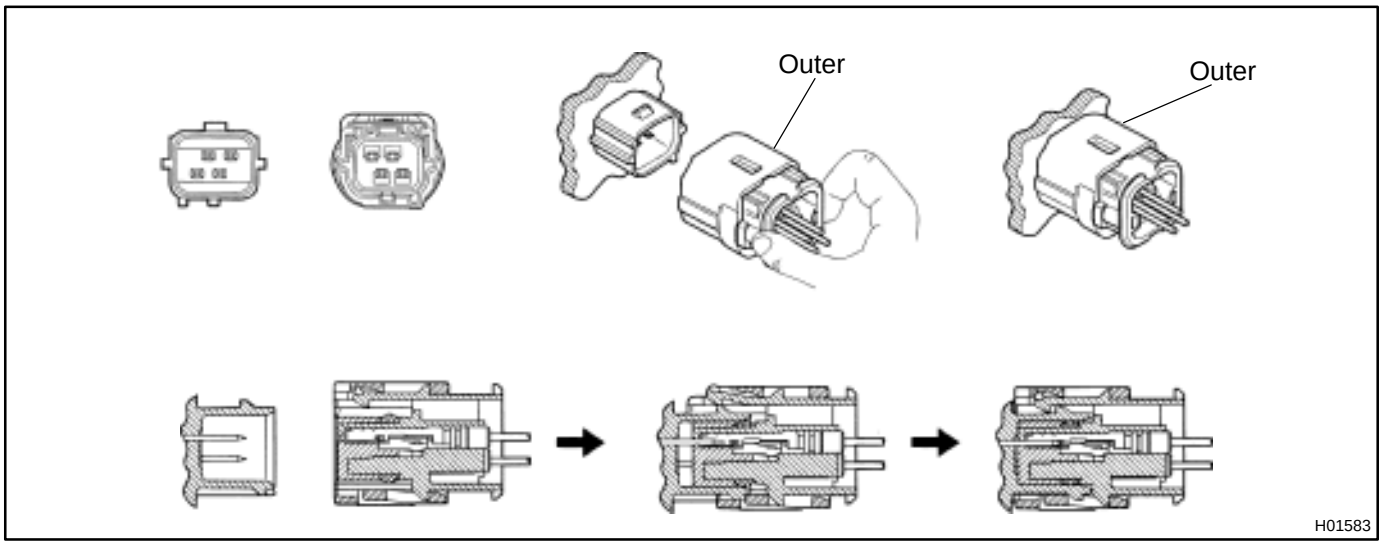

(a) Align the male connector (of the side of sensor) and female connector in the same direction as shown in the illustration and fit in them without rubbing.

(b) As they are fitted in, the outer slides rearward. Press it until the outer returns to its original position again.

If fitting stops half way, connectors will separate.

(c) Make sure to insert until they are locked. After fitting in, pull them slightly to check that they are locked. (When locked, make sure that the outer returns to its original position and sound at the time of fitting in can be heard.)

HINT:

- Do not fit in while holding the outer.
- When fitting in, the outer slides. Do not touch it.

12. DISCONNECTION OF CONNECTORS FOR STEERING WHEEL PAD AND FRONT PASSENGER AIRBAG ASSEMBLY

(a) Place a finger on the slider.
(b) Slide the slider to release lock.
(c) Disconnect the connector.

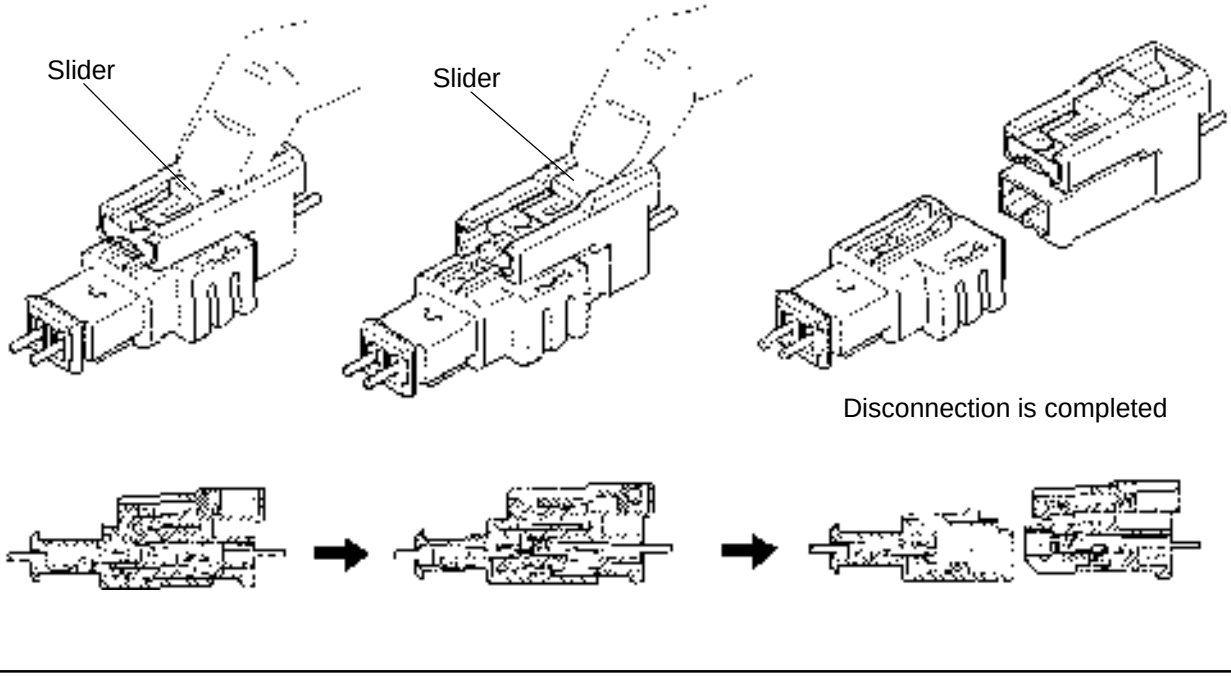

13. CONNECTION OF CONNECTORS FOR STEERING WHEEL PAD AND FRONT PASSENGER AIRBAG ASSEMBLY

(a) Align a lock part of male connector and a slider of female connector in the same direction as shown in the illustration, fit in them without rubbing.

(b) Make sure to insert until they are locked. After fitting in pull them slightly to check that they are locked. (When locked, make sure that the outer returns to its original position and sound at the time of fitting in can be heard.)

HINT:

- As the slider slides, do not touch it.
- Be careful not to deform the release board. If the release board is deformed, replace it with a new one.

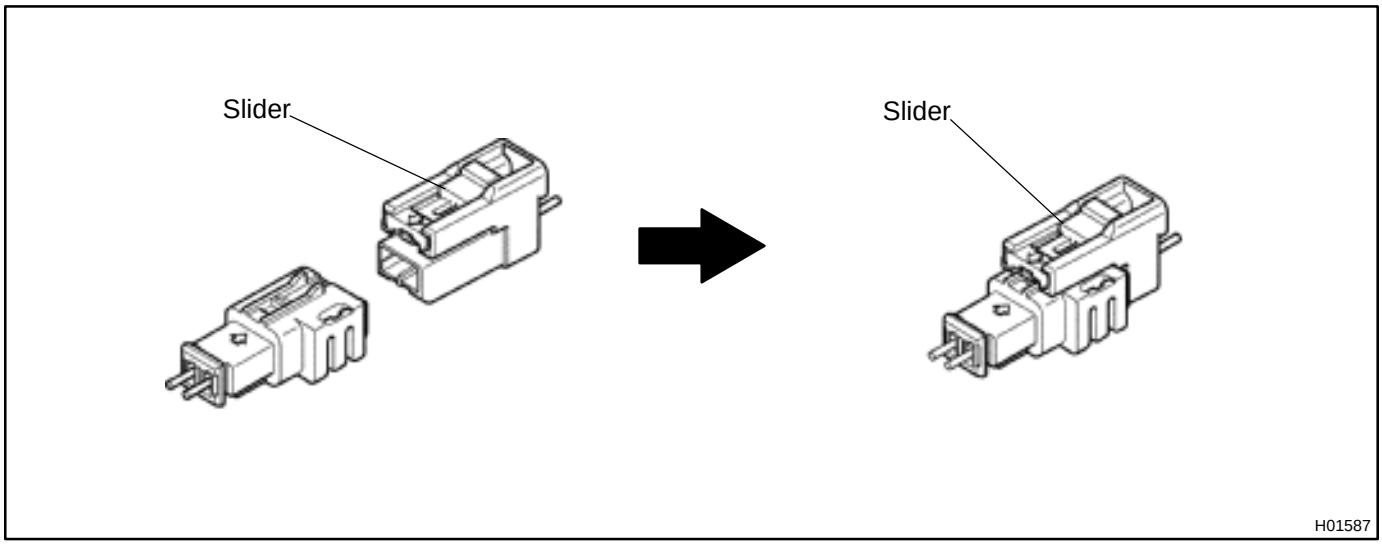

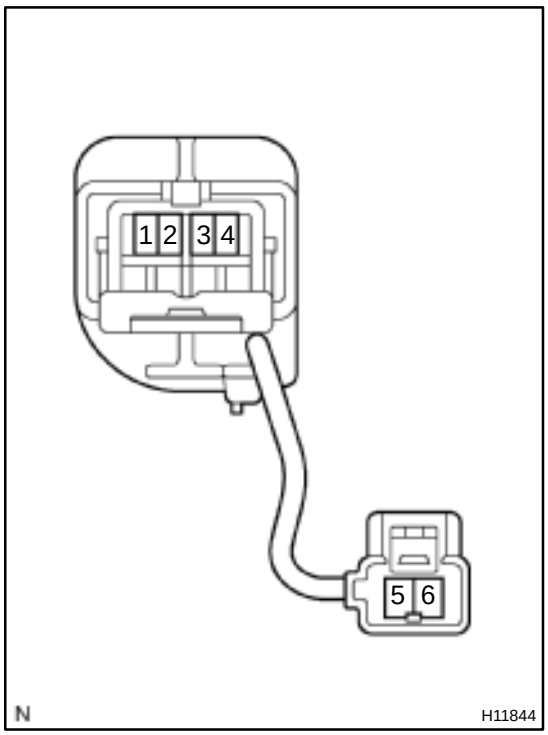

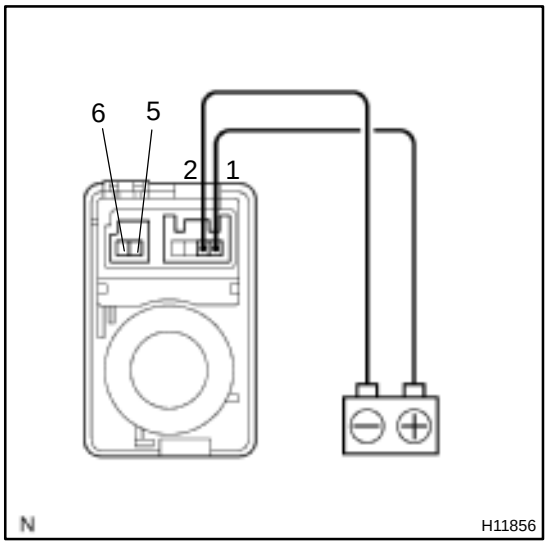

PASSENGER AIRBAG MANUAL ON–OFF SWITCH

RS02J–03

INSPECTION

1. INSPECT PASSENGER AIRBAG MANUAL ON–OFF SWITCH CONTINUITY

HINT:

Release the airbag activention prevention mechanism of the passenger airbag manual on–off switch connector on the air-bag sensor assembly side. (See page DI–456)

Switch position	Tester connection	Specified condition
ON	1 – 3 2 – 4	Continuity
	3 – 4 5 – 6	No continuity
OFF	5 – 6	Continuity
	2 – 4	No continuity
	3 – 4	Resistance 2.1 – 2.7 Ω

If continuity is not as specified, replace the switch.

2. INSPECT PASSENGER AIRBAG MANUAL ON–OFF INDICATOR OPERATION

(a) Check that continuity exists between 5 and 6.

(b) Connect the positive (+) lead from the battery to terminal 1 and negative (–) lead to terminal 2.

(c) Check that the indicator light lights up.

If the operation is not as specified, replace the indicator.

SRS AIRBAG

RS021–03

PRECAUTION

NOTICE:

- **The TOYOTA TACOMA is equipped with an SRS, which comprises a driver airbag and a front passenger airbag. Failure to carry out service operations in the correct sequence could cause the SRS to unexpectedly deploy during servicing, possibly leading to a serious accident. Further, if a mistake is made in servicing the SRS, it is possible the SRS may fall to operate when required. Before performing servicing (including removal or installation of parts, inspection or replacement), be sure to read the following items carefully, then follow the correct procedure described in the repair manual.**
- **Malfunction symptoms of the SRS are difficult to confirm, so the DTCs become the most important source of information when troubleshooting the SRS, always inspect the DTCs before disconnecting the battery.**
- **Even in cases of a minor collision where the SRS does not deploy, the steering wheel pad, front passenger airbag assembly, airbag sensor assembly and front airbag sensor if shocks are likely to be inspected. (See page RS–13, RS–27, RS–40 and RS–45)**
- **Never use SRS parts from another vehicle. When replacing parts, replace them with new parts.**
- **Never disassemble and repair the steering wheel pad, front passenger airbag assembly, airbag sensor assembly or front airbag sensor in order to reuse it.**
- **If the steering wheel pad, front passenger airbag assembly, airbag sensor assembly or front airbag sensor has been dropped, or if there are cracks, dents or other defects in the case, bracket or connector, replace them with new ones.**
- **Use a volt/ohmmeter with high impedance (10 kΩ/V minimum) for troubleshooting the system's electrical circuits.**
- **Information labels are attached to the periphery of the SRS components. Follow the instruction on the notices.**
- **After work on the SRS is completed, check the SRS warning light. (See page DI–456)**
- **If the vehicle is equipped with a mobile communication system, refer to the precaution in the IN section.**

CAUTION:

- **Work must be started after 90 seconds from the time the ignition switch is turned to the "LOCK" position and the negative (–) terminal cable is disconnected from the battery. (The SRS is equipped with a back–up power source so that if work is started within 90 seconds of disconnecting the negative (–) terminal cable of the battery, the SRS may be deployed.)**
- **When the negative (–) terminal cable is disconnected from the battery, the memory of the clock and audio system will be canceled. So before starting work, make a record of the contents memorized in the audio memory system. When work is finished, reset the audio systems as before and adjust the clock. To avoid erasing the memory of each memory system, never use a back–up power supply from outside the vehicle.**
- **Before repairs, remove the airbag sensor if shocks are likely to be applied to the sensor during repairs.**
- **Do not expose the steering wheel pad, front passenger airbag assembly, airbag sensor assembly or front airbag sensor directly to hot air or flames.**

STEERING WHEEL PAD AND SPIRAL CABLE

RS023–03

COMPONENTS

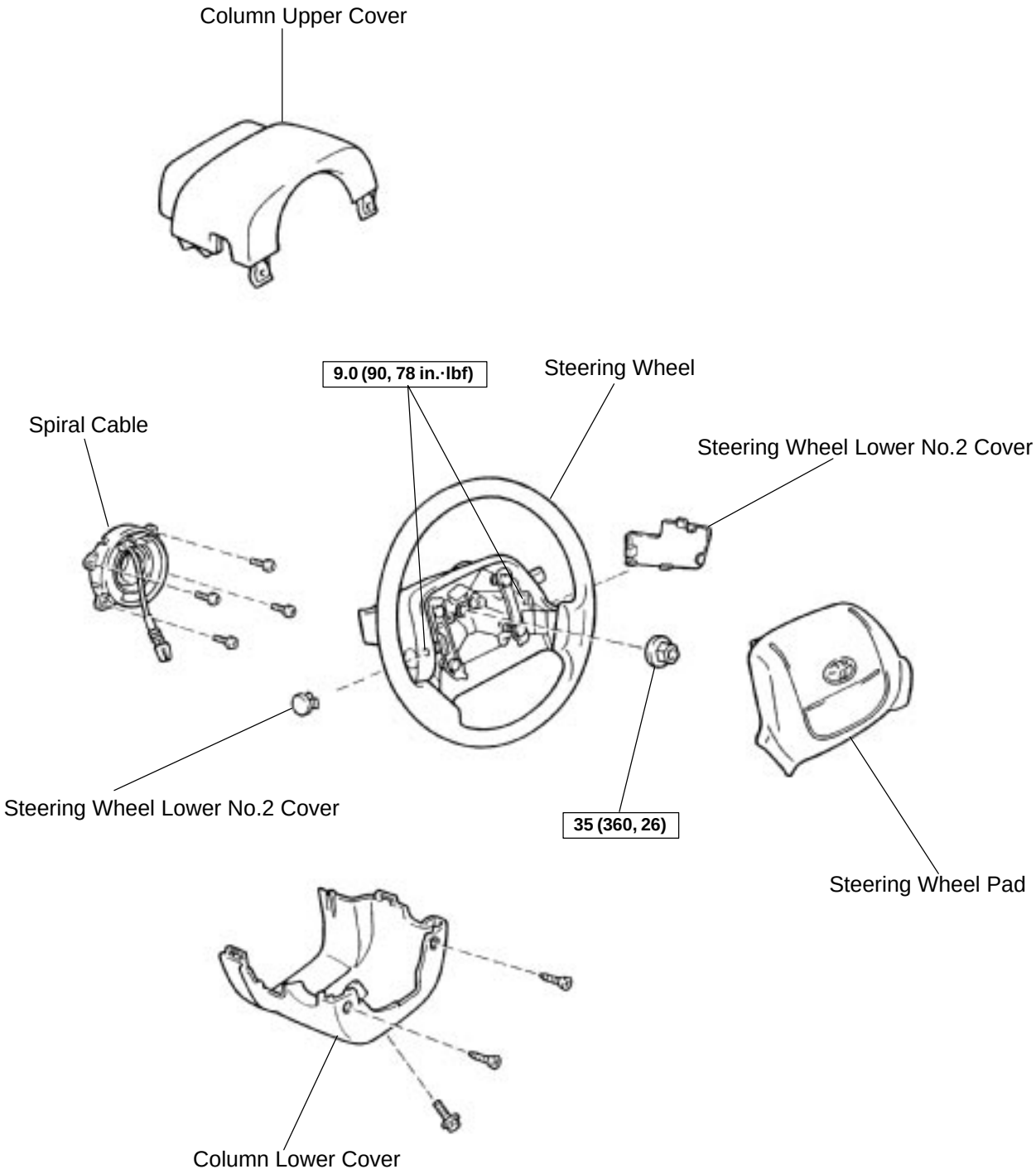

N·m (kgf·cm, ft·lbf) : Specified torque

H01265

RS0J7–01

DISPOSAL

HINT:

When scrapping vehicle equipped with an SRS or disposing of a steering wheel pad (with airbag), always first deploy the airbag in accordance with the procedure described below. If any abnormality occurs with the airbag deployment, contact the SERVICE DEPT. of TOYOTA MOTOR SALES, U.S.A., INC.

CAUTION:

- **Never dispose of a steering wheel pad which has an undeployed airbag.**
- **The airbag produces a sizeable exploding sound when it deploys, so perform the operation out–of–doors and where it will not create a nuisance to nearby residents.**



- **When deploying the airbag, always use the specified SST (SRS Airbag Deployment Tool). Perform the operation in a place away from electrical noise.**
  SST 09082–00700
- **When deploying an airbag, perform the operation at least 10 m (33 ft) away from the steering wheel pad.**
- **The steering wheel pad is very hot when the airbag is deployed, so leave it alone for at least 30 minutes after deployment.**
- **Use gloves and safety glasses when handling a steering wheel pad with the deployed airbag.**
- **Always wash your hands with water after completing the operation.**
- **Do not apply water, etc. to a steering wheel pad with the deployed airbag.**

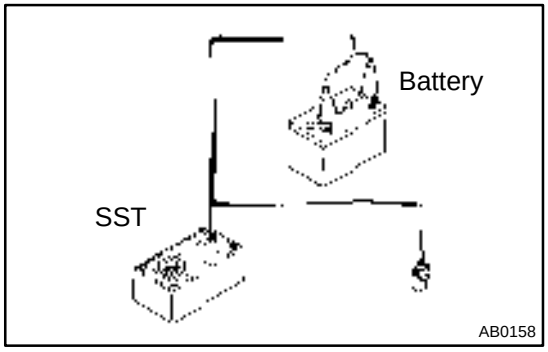

1. AIRBAG DEPLOYMENT WHEN SCRAPPING VEHICLE

HINT:

Have a battery ready as the power source to deploy the airbag.



(a) Check functioning of the SST.

CAUTION:

When deploying the airbag, always use the specified SST: SRS Airbag Deployment Tool.

SST 09082–00700

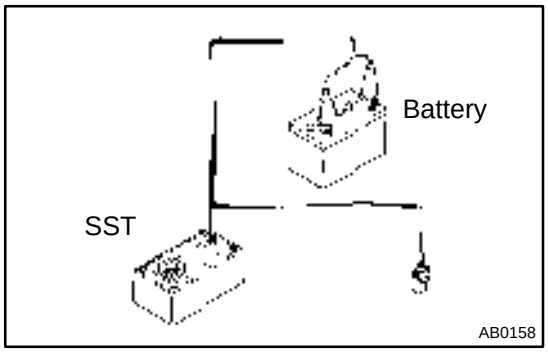

(1) Connect the red clip of the SST to the battery positive (+) terminal and the black clip to the battery negative (–) terminal.

HINT:

Do not connect the yellow connector which will be connected with the supplemental restraint system.

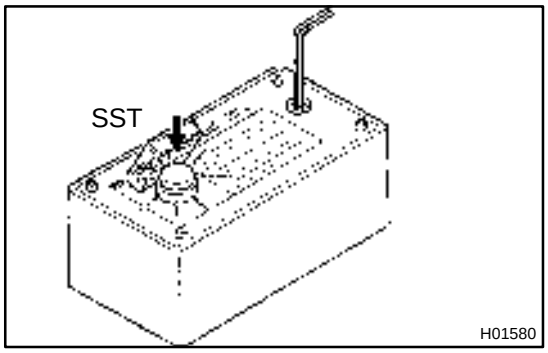

(2) Press the SST activation switch, and check that the LED of the SST activation switch lights up.

CAUTION:

If the LED lights up when the activation switch is not being pressed, SST malfunction is probable, so definitely do not use the SST.

(3) Disconnect the SST from the battery.

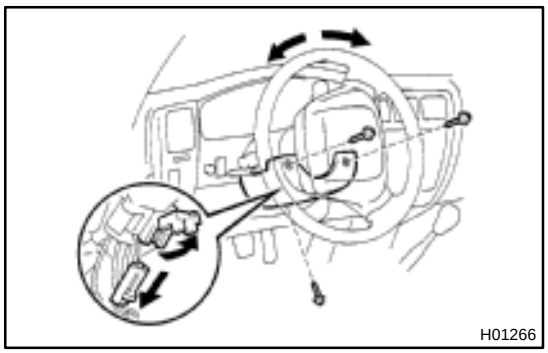

(b) Install the SST.

CAUTION:

Check that there is no looseness in the steering wheel and steering wheel pad.

(1) Remove the steering column lower cover.
Remove the 3 screws and steering column lower cover as shown in the illustration.

(2) Disconnect the airbag connector of the spiral cable.

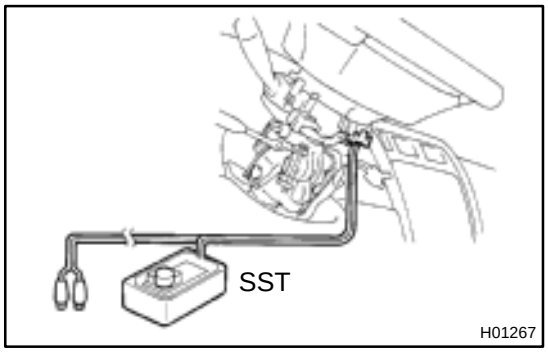

(3) Connect the connector of the SST to the airbag connector of the spiral cable.

SST 09082–00700

NOTICE:

To avoid damaging the connector of the SST and wire harness, do not lock the secondary lock of the twin lock.

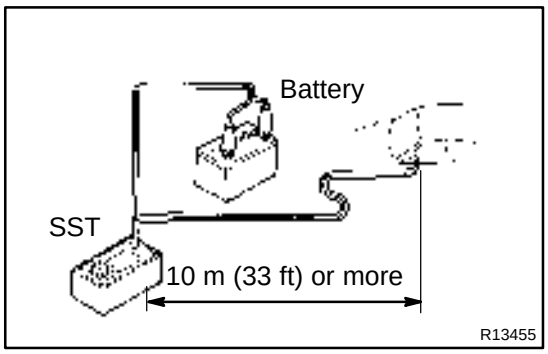

(4) Move the SST at least 10 m (33 ft) away from the front of the vehicle.

(5) Close all the doors and windows of the vehicle.

NOTICE:

Take care not to damage the SST wire harness.

(6) Connect the SST red clip to the battery positive (+) terminal and the black clip to the negative (–) terminal.

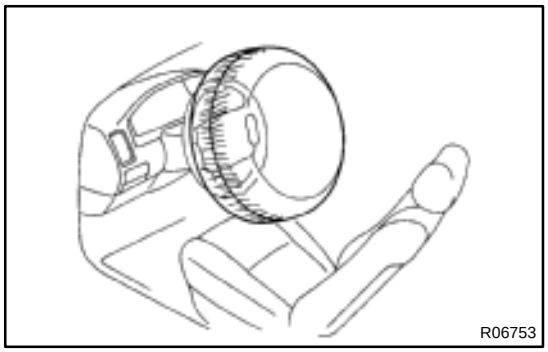

(c) Deploy the airbag.

(1) Check that no one is inside the vehicle or within 10 m (33 ft) area around the vehicle.

(2) Press the SST activation switch and deploy the airbag.

CAUTION:

- **The steering wheel pad is very hot when the airbag is deployed, so leave it alone for at least 30 minutes after deployment.**
- **Use gloves and safety glasses when handling a steering wheel pad with the deployed airbag.**
- **Always wash your hands with water after completing the operation.**
- **Do not apply water, etc. to a steering wheel pad with the deployed airbag.**
- **When scrapping a vehicle, deploy the airbag and scrap the vehicle with the steering wheel pad still installed.**
- **When moving a vehicle for scrapping which has a steering wheel pad with deployed airbag, use gloves and safety glasses.**

HINT:

The airbag deploys simultaneously as the LED of the SST activation switch lights up.

2. DEPLOYMENT WHEN DISPOSING OF STEERING WHEEL PAD ONLY

NOTICE:

- **When disposing of the steering wheel pad (with airbag) only, never use the customers vehicle to deploy the airbag.**
- **Be sure to follow the procedure given below when deploying the airbag.**

HINT:

Have a battery ready as the power source to deploy the airbag.

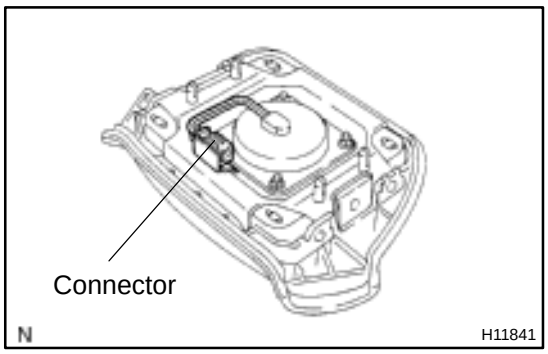

(a) Remove the steering wheel pad (See page SR–13).

CAUTION:

- **When removing the steering wheel pad, work must be started 90 seconds after the ignition switch is turned to the "LOCK" position and the negative (–) terminal cable is disconnected from the battery.**
- **When storing the steering wheel pad, keep the upper surface of the pad facing upward.**

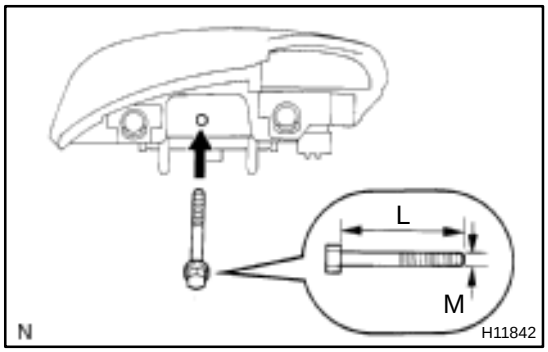

(b) Fix the steering wheel pad to the disc wheel with tire.

(1) Install the 2 bolts with washers in the 2 bolt holes in the steering wheel pad.

Bolt:

L: 35. mm (1.387 in.)

M: 6.0 mm (0.236 in.)

Pitch: 1.0 mm (0.039 in.)

NOTICE:

- **Tighten the bolts by hand until the bolts become difficult to turn.**
- **Do not tighten the bolts too much.**

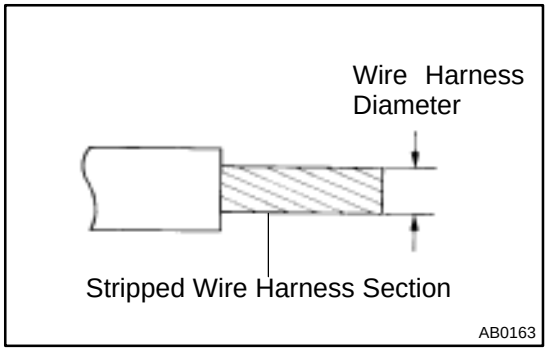

(2) Using a service–purpose wire harness tie down the steering wheel pad to the disc wheel.

Wire harness: Stripped wire harness section 1.25 mm^2 or more (0.0019 in^2. or more)

CAUTION:

If a wire harness which is too thin or some other thing is used to tie down the steering wheel pad, it may be snapped by the shock when the airbag is deployed. This is highly dangerous. Always use a wire harness for vehicle use which is at least 1.25 mm^2 (0.0019 in^2.).

HINT:

To calculate the square of the stripped wire harness section:

Square = 3.14 x $(Diameter)^2$ divided by 4

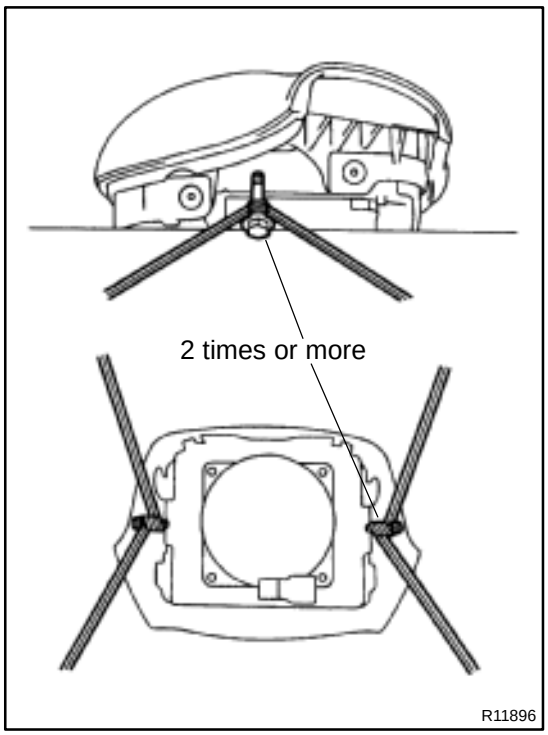

(3) Using 3 wire harness, wind the wire harness at least 2 times each around the bolts installed on the left and right sides of the steering wheel pad.

CAUTION:

- **Tightly wind the wire harness around the bolts so that there is no slack.**
- **If there is slackness in the wire harness, the steering wheel pad may come loose due to the shock when the airbag is deployed. This is highly dangerous.**

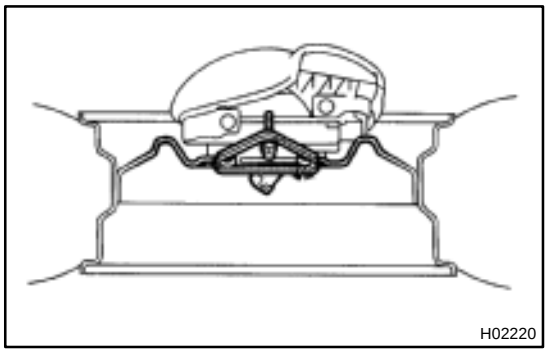

(4) Face the upper surface of the steering wheel pad upward. Separately tie the left and right sides of the steering wheel pad to the disc wheel through the hub nut holes. Position the steering wheel pad connector so that it hangs downward through a hub hole in the disc wheel.

CAUTION:

- **Make sure that the wire harness is tight. It is very dangerous when looseness in the wire harness results in the steering wheel pad coming free due to the shock from the airbag deploying.**
- **Always tie down the steering wheel pad with the pad side facing upward. It is very dangerous if the steering wheel pad is tied down with the metal surface facing upward as the wire harness will be cut by the shock from the airbag deploying and the steering wheel pad will be thrown into the air.**

NOTICE:

The disc wheel will be marked by airbag deployment, so when disposing of the airbag use a redundant disc wheel.

(c) Check functioning of the SST (See step 1–(a)).
SST 09082–00700

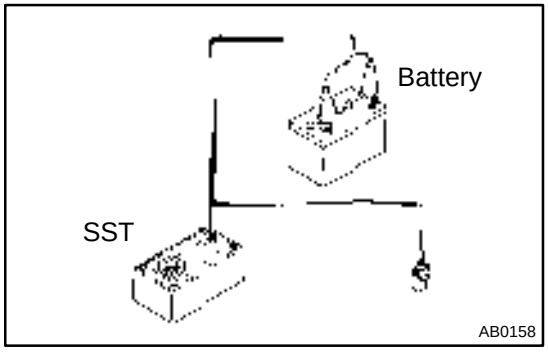

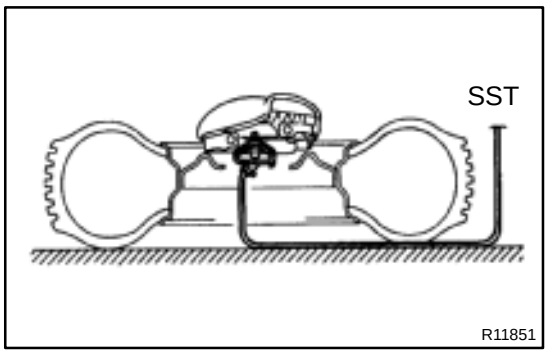

(d) Install the SST.

CAUTION:

Place the disc wheel on the level ground.

(1) Connect the connector of the SST to the steering wheel pad connector.

SST 09082–00700, 09082–00760

NOTICE:

To avoid damaging the SST connector and wire harness, do not lock the secondary lock of the twin lock. Also, secure some slack for the SST wire harness inside the disc wheel.

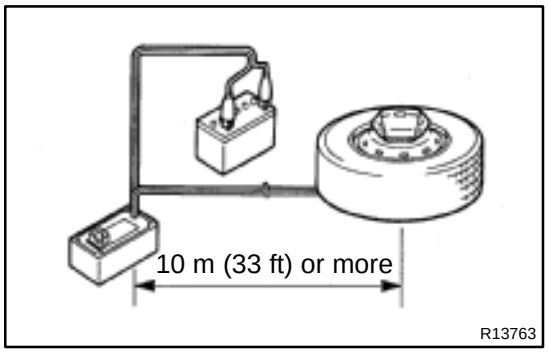

(2) Move the SST to at least 10 m (33 ft) away from the steering wheel pad tied down on the disc wheel.

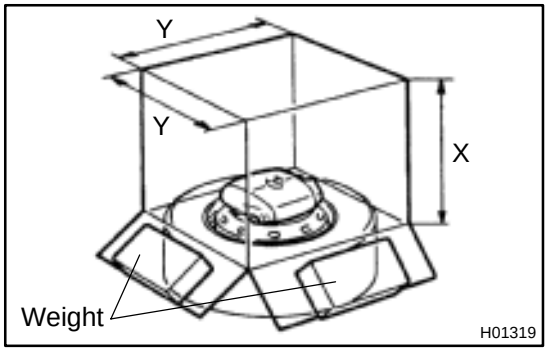

(e) Cover the steering wheel pad with a cardboard box or tires.

- Covering method using a cardboard box:
  Cover the steering wheel pad with the cardboard box and weight the cardboard box down in 4 places with at least 190 N (20 kg, 44 lb).

Size of cardboard box:

Must exceed the following dimensions:

X = 460 mm (18.11 in.)

Y = 650 mm (25.59 in.)

NOTICE:

- **When dimension Y of the cardboard box exceeds the diameter of the disc wheel with tire to which the steering wheel pad is tied, X should be the following size.**
  X = 460 mm (18.11 in.) + width of tire
- **If a cardboard box smaller than the specified size is used, the cardboard box will be broken by the shock from the airbag deployment.**

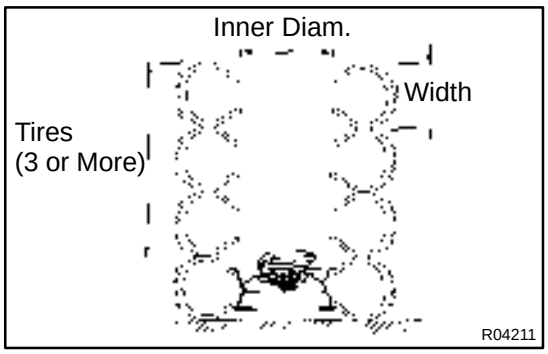

- Covering method using tires:
  Place at least 3 tires without disc wheel on top of the disc wheel with tire to which the steering wheel pad is tied.

Tire size: Must exceed the following dimensions–
Width: 185 mm (7.87 in.)
Inner diameter: 360 mm (14.17 in.)

CAUTION:
Do not use tires with disc wheels.

NOTICE:
The tires may be marked by the airbag deployment, so use the redundant tires.

(f) Deploy the airbag.
  (1) Connect the SST red clip to the battery positive (+) terminal and the black clip to the battery negative (–) terminal.

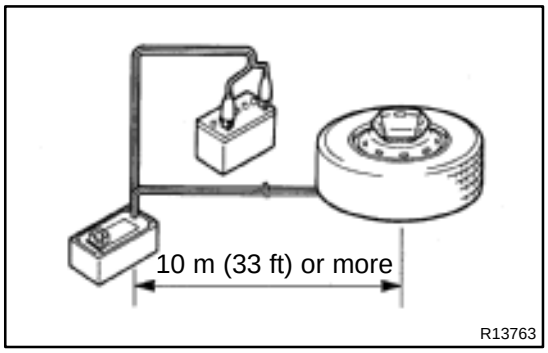

  (2) Check that no one is within 10 m (33 ft) area around the disc wheel which the steering wheel pad is tied to.
  (3) Press the SST activation switch and deploy the airbag.

HINT:
The airbag deploys simultaneously as the LED of the SST activation switch lights up.



(g) Dispose of the steering wheel pad (with airbag).

CAUTION:
- **The steering wheel pad is very hot when the airbag is deployed, so leave it alone for at least 30 minutes after deployment.**
- **Use gloves and safety glasses when handling a steering wheel pad with the deployed airbag.**
- **Always wash your hands with water after completing the operation.**
- **Do not apply water, etc. to a steering wheel pad with the deployed airbag.**
  (1) Remove the steering wheel pad from the disc wheel.
  (2) Place the steering wheel pad in a vinyl bag, tie the end tightly and dispose of it in the same way as other general parts disposal.


AB0166

3. DEPLOYMENT WHEN DISPOSING OF STEERING WHEEL PAD WITH AIRBAG DEPLOYED IN COLLISION

Dispose of the steering wheel pad (with airbag).

CAUTION:

- **The steering wheel pad is very hot when the airbag is deployed, so leave it alone for at least 30 minutes after deployment.**
- **When moving a vehicle for scrapping which has a steering wheel pad with the deployed airbag, use gloves and safety glasses.**
- **Use gloves and safety glasses when handling a steering wheel pad with deployed airbag.**
- **Always wash your hands with water after completing the operation.**
- **Do not apply water, etc. to a steering wheel pad with deployed airbag.**

(1) Remove the steering wheel pad from the steering wheel (See page SR–13).

(2) Place the steering wheel pad in a vinyl bag, tie the end tightly and dispose of it in the same way as other general parts disposal.

RS0J6–01

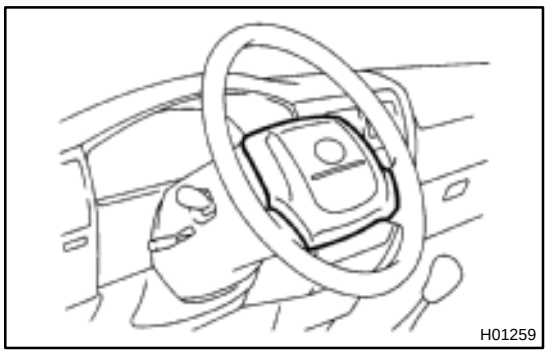
H01259

INSPECTION

1. Vehicle not involved in collision:

INSPECT SUPPLEMENTAL RESTRAINT SYSTEM

(a) Do a diagnostic system check (See page DI–456).

(b) Do a visual check which includes the following item with the steering wheel pad (with airbag) installed in the vehicle.

Check cuts, minute cracks or marked discoloration on the steering wheel pad top surface and in the grooved portion.

2. Vehicle involved in collision and airbag is not deployed:

INSPECT SUPPLEMENTAL RESTRAINT SYSTEM

(a) Do a diagnostic system check (See page DI–456).

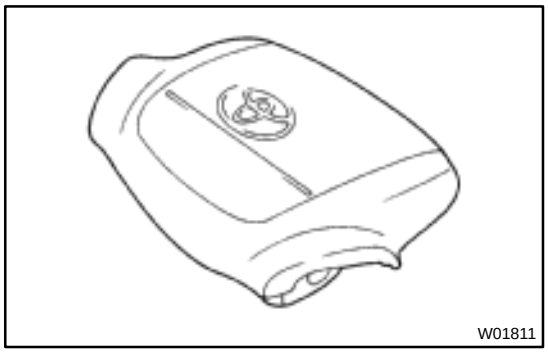
W01811

(b) Do a visual check which includes the following items with the steering wheel pad (with airbag) removed from the vehicle.

- Check cuts, minute cracks or marked discoloration on the steering wheel pad top surface and in the grooved portion.
- Check cuts and cracks in wire harness, and chipping in connectors.

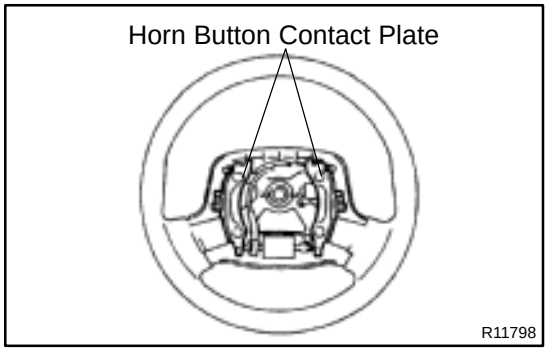

R11798

- Check the deformation of the horn button contact plate of the steering wheel.

HINT:

- If the horn button contact plate of the steering wheel is deformed, never repair it. Always replace the steering wheel assembly with a new one.

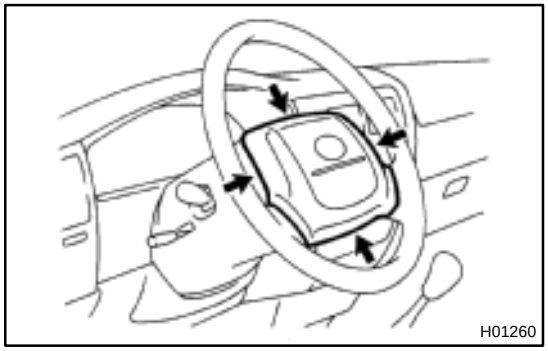
H01260

- There should be no interference between the steering wheel pad and steering wheel, and the clearance should be uniform all the way around when the new steering wheel pad is installed on the steering wheel.

CAUTION:

For removal and installation of the steering wheel pad, see page SR–13 and SR–20, be sure to follow the correct procedure.

3. Vehicle involved in collision and airbag is deployed: INSPECT SUPPLEMENTAL RESTRAINT SYSTEM

(a) Do a diagnostic system check (See page DI–456).

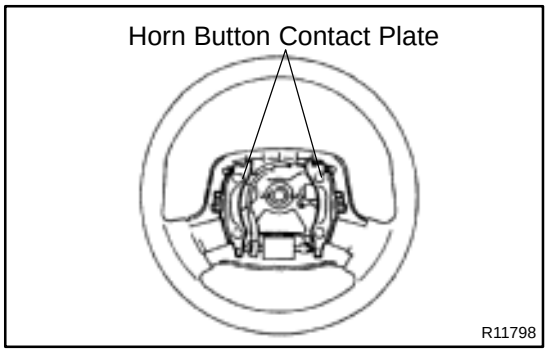

(b) Do a visual check which includes the following items with the steering wheel pad (with airbag) removed from the vehicle.

- Check the deformation on the horn button contact plate of the steering wheel.
- Check the damage on the spiral cable connector and wire harness.

HINT:

- If the horn button contact plate of the steering wheel is deformed, never repair it. Always replace the steering wheel assembly with a new one.

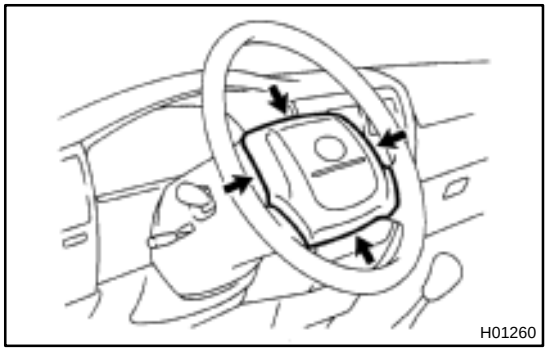

- There should be no interference between the steering wheel pad and steering wheel, and the clearance should be uniform all the way around when the new steering wheel pad is installed on the steering wheel.

CAUTION:
For removal and installation of the steering wheel pad, see page SR–13 and SR–20, and be sure to follow the correct procedure.

RS028–03

INSTALLATION

HINT:

For step 1 to 6, refer to page SR–20.

1. **INSTALL SPIRAL CABLE**
2. **INSTALL UPPER AND LOWER COLUMN COVERS**
3. **INSTALL STEERING WHEEL**
4. **INSTALL STEERING WHEEL PAD**

RS024–03

REMOVAL

HINT:

For step 1 to 4, refer to page SR–13.

1. **REMOVE STEERING WHEEL PAD**
2. **REMOVE STEERING WHEEL**
3. **REMOVE UPPER AND LOWER COVERS**
4. **REMOVE SPIRAL CABLE**

RS027–04

REPLACEMENT

REPLACEMENT REQUIREMENTS

In the following cases, replace the steering wheel pad, steering wheel or spiral cable.

Case	Replacing part
If the airbag has been deployed.	Steering wheel pad
If the steering wheel pad has been found to be faulty in troubleshooting.	Steering wheel pad
If the spiral cable has been found to be faulty in troubleshooting.	Spiral cable
If the steering wheel pad has been found to be faulty during checking items. (See page RS–13)	Steering wheel pad
If the steering wheel has been found to be faulty during checking items. (See page RS–13)	Steering wheel
If the spiral cable has been found to be faulty during checking items. (See page RS–13)	Spiral cable
If the steering wheel pad has been dropped.	Steering wheel pad

CAUTION:

For removal and installation of the steering wheel pad, see page SR–13 and SR–20. Be sure to follow the correct procedure.

RS02L–03

INSPECTION

HINT:

The SRS wire harness is integrated with the cowl wire harness assembly. The wires for the SRS wire harness are encased in a yellow corrugated tube and all the connectors in the system are a standard yellow color.

1. VEHICLE NOT INVOLVED IN COLLISION

Do a diagnostic system check (See page DI–456).

2. VEHICLE INVOLVED IN COLLISION

(a) Do a diagnostic system check (See page DI–456).

(b) Check for breaks in all wires of the SRS wire harness, and for exposed conductors.

(c) Check to see if the SRS wire harness connectors are cracked or chipped.

WIRE HARNESS AND CONNECTOR

RS02K–03

LOCATION

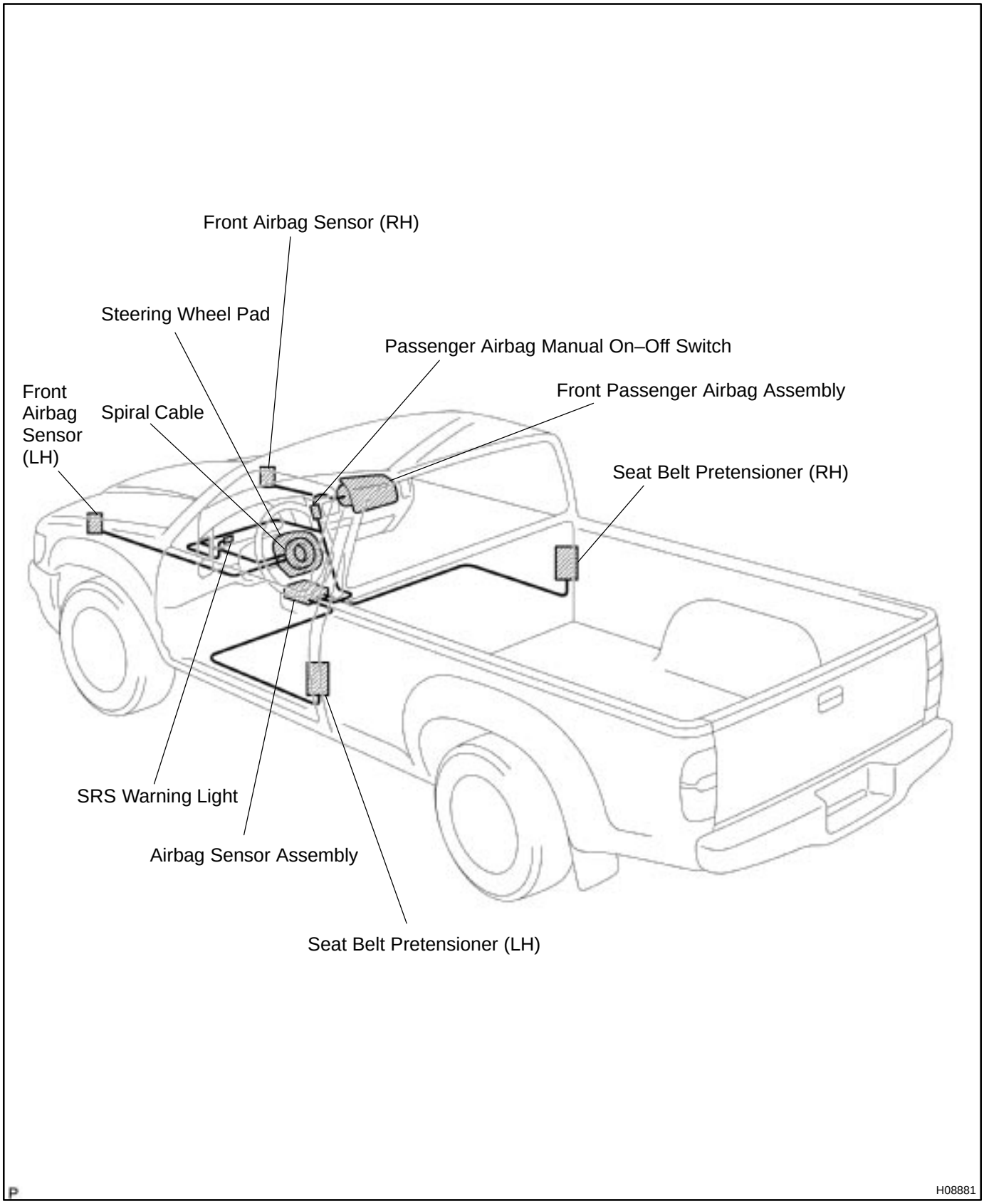

RS02M–03

REPLACEMENT

REPLACEMENT REQUIREMENTS

In the following cases, replace the wire harness or connector.

- If any part of the SRS wire harness or any connector has been found to be faulty in troubleshooting.
- If any part of the SRS wire harness or any connector has been found to be faulty during checking items 2–(b) or (c).

NOTICE:

If the wire harness used in the SRS is damaged, replace the whole wire harness assembly.

STARTER

COMPONENTS

ST01J–02

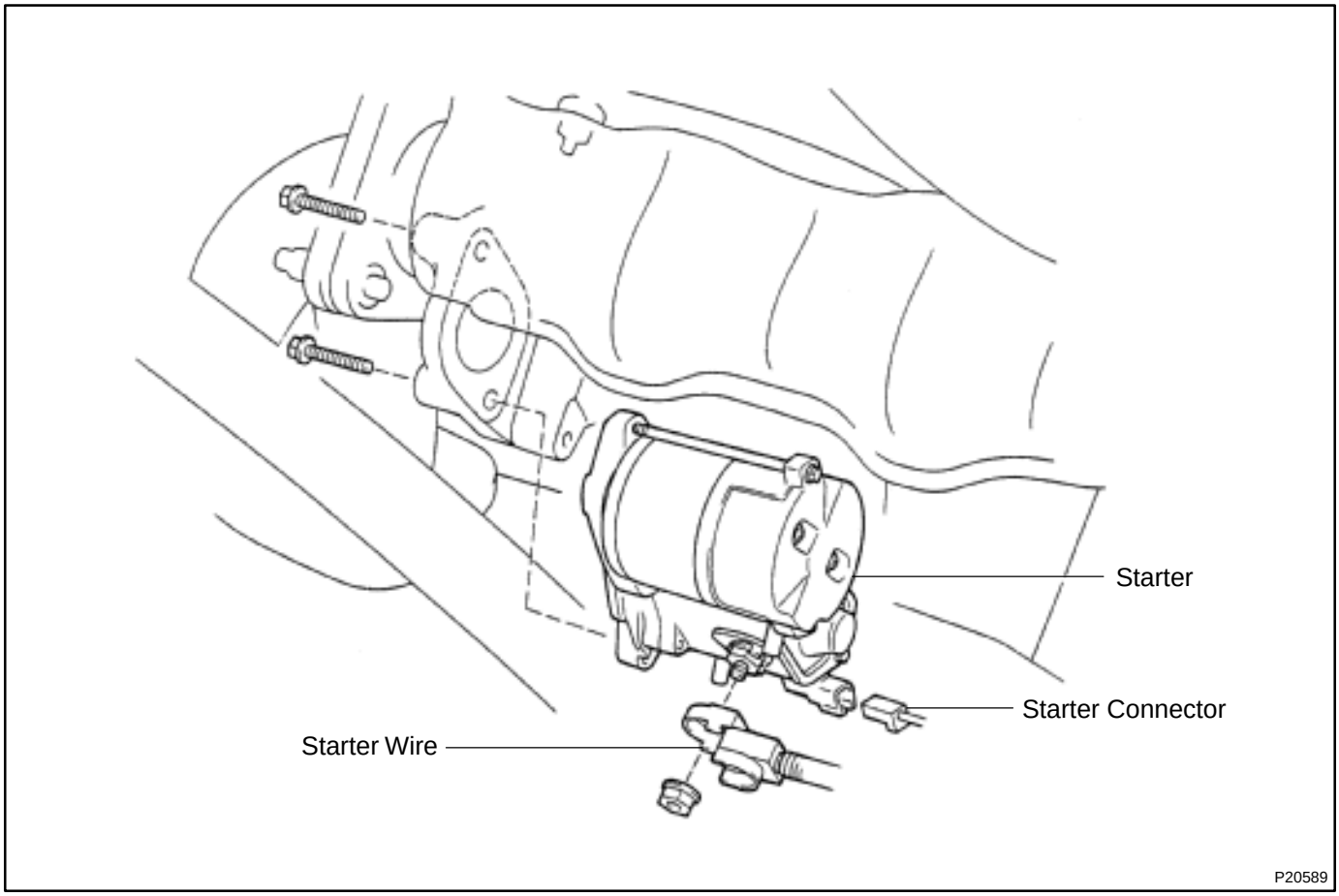

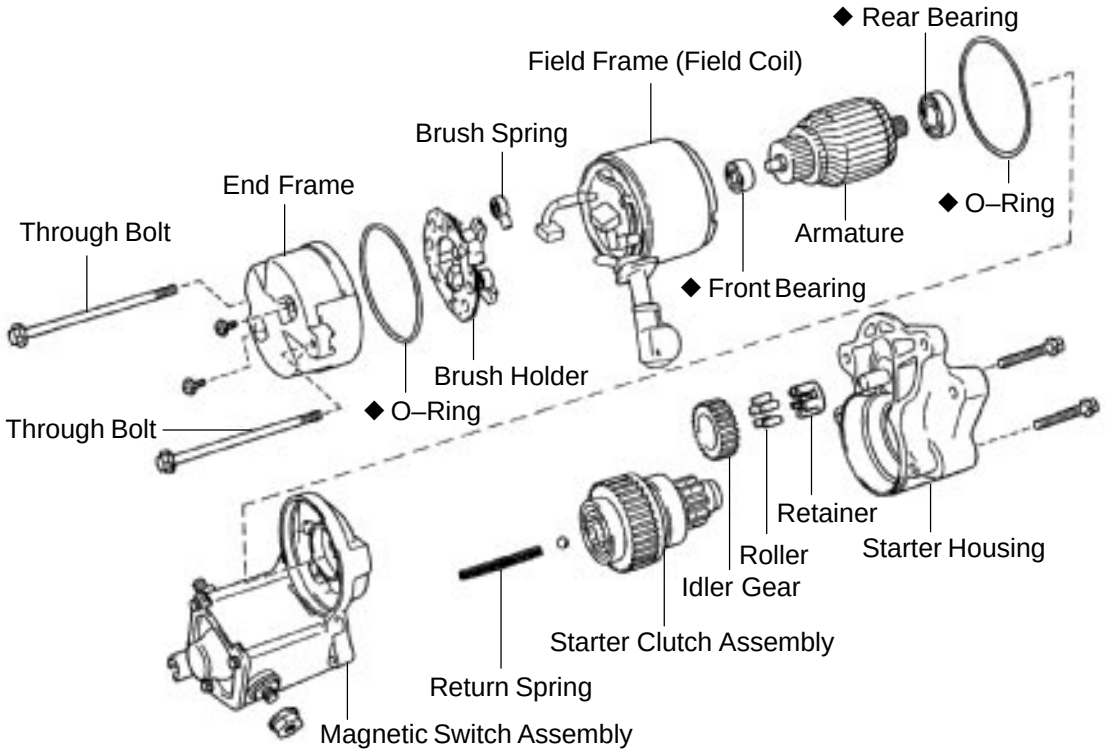

Magnetic Switch Assembly

S06731

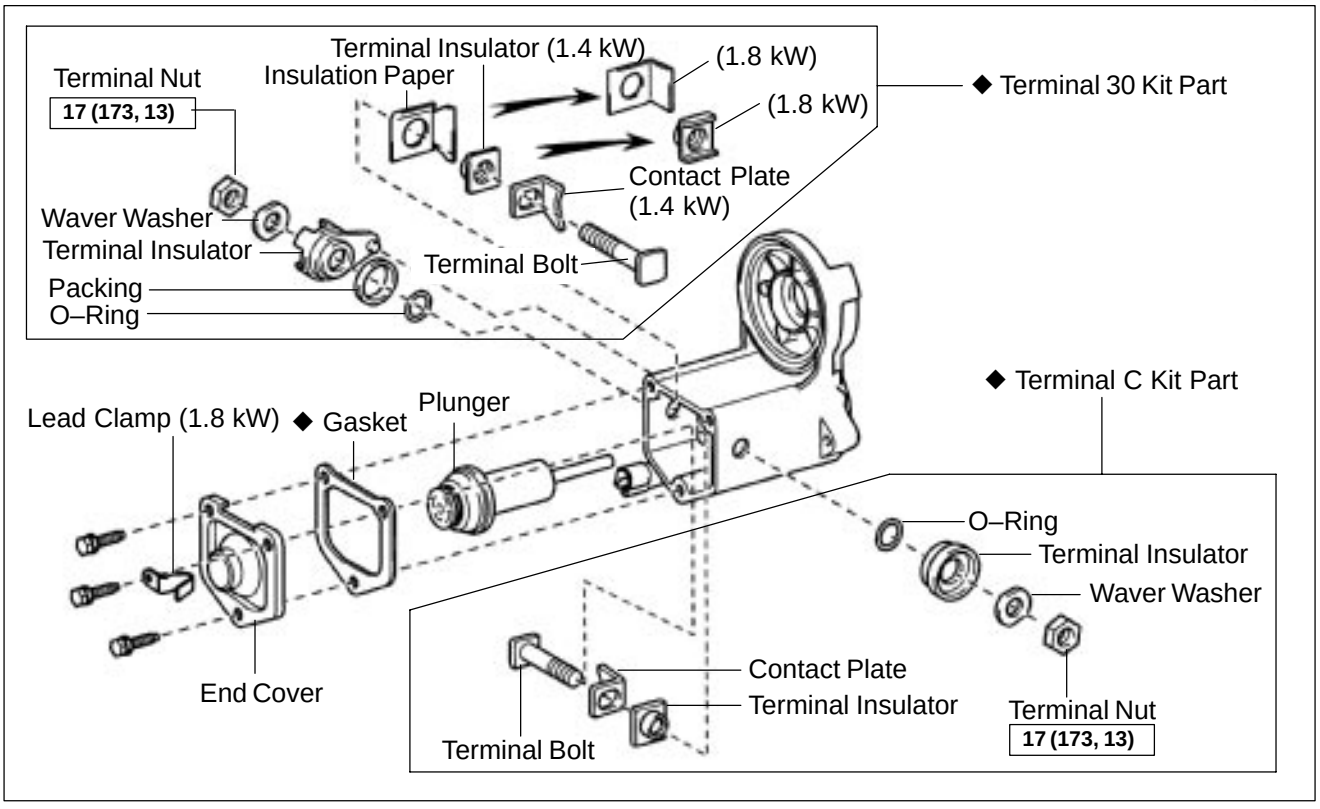

N·m (kgf·cm, ft·lbf) : Specified torque

◆ Non–reusable part

S02425

Z19063

ST01L–02

DISASSEMBLY

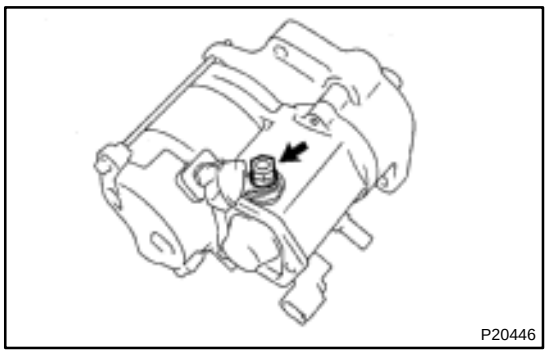

1. REMOVE FIELD FRAME AND ARMATURE

(a) Remove the nut, and disconnect the lead wire from the magnetic switch terminal.
Torque: 5.9 N·m (60 kgf·cm, 52 in.·lbf)

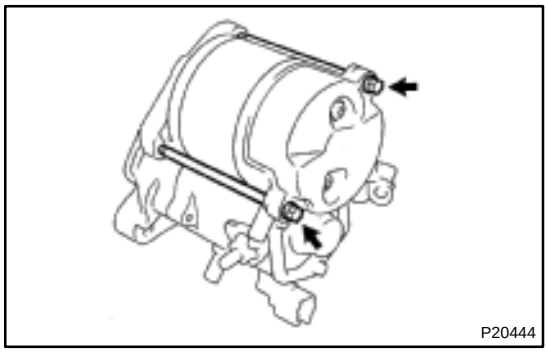

(b) Remove the 2 through bolts.
Torque:
5.9 N·m (60 kgf·cm, 52 in.·lbf) for 1.4 kW
9.3 N·m (95 kgf·cm, 82 in.·lbf) for 1.8 kW

(c) Pull out the field frame with the armature from the magnetic switch assembly.

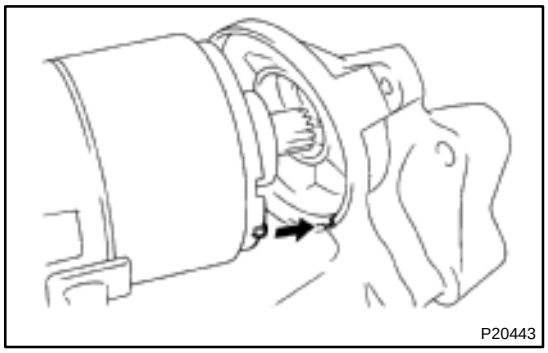

HINT:
At the time of reassembly, please refer to the following items.
Align the protrution of the field frame with the cutout of the magnetic switch.

(d) Remove the O–ring.

HINT:
At the time of reassembly, please refer to the following items.
Use a new O–ring.

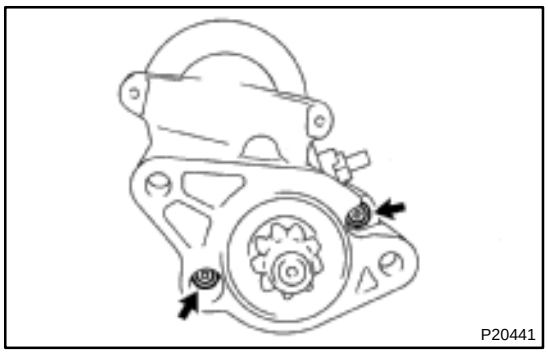

2. REMOVE STARTER HOUSING, CLUTCH ASSEMBLY AND GEAR

(a) Remove the 2 screws.
Torque:
5.9 N·m (60 kgf·cm, 52 in.·lbf) for 1.4 kW
9.3 N·m (95 kgf·cm, 82 in.·lbf) for 1.8 kW

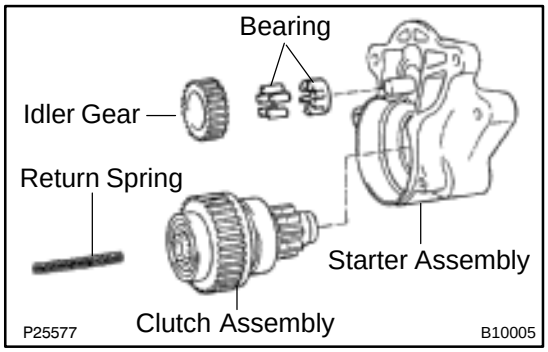

(b) Remove the starter housing, return spring, the clutch assembly, idler gear and bearing from the magnetic switch assembly.

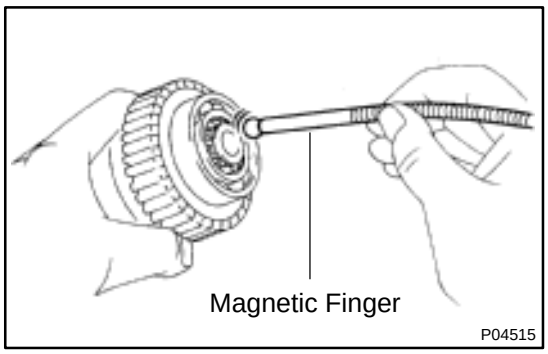

3. REMOVE STEEL BALL

Using a magnetic finger, remove the steel ball from the clutch shaft hole.

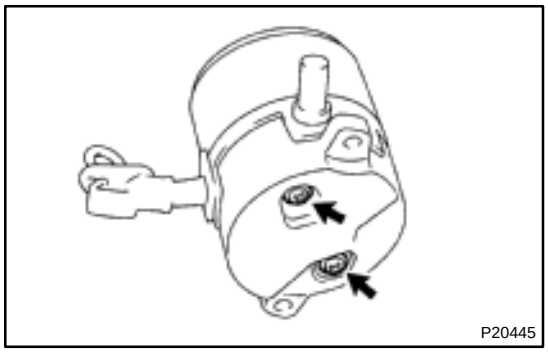

4. REMOVE BRUSH HOLDER

(a) Remove the 2 screws end frame from the field frame.

Torque:
1.5 N·m (15 kgf·cm, 13 in.·lbf) for 1.4 kW
3.8 N·m (39 kgf·cm, 34 in.·lbf) for 3.8 kW

(b) Remove the O–ring from the field frame.

HINT:
At the time of reassembly, please refer to the following items.
Use a new O–ring.

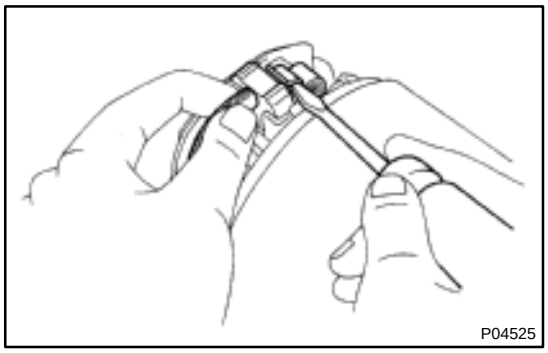

(c) Using a screwdriver hold the spring back and disconnect the brush from the brush holder. Disconnect the 4 brushes, and remove the brush holder.

5. REMOVE ARMATURE FROM FIELD FRAME

ST0HX–01

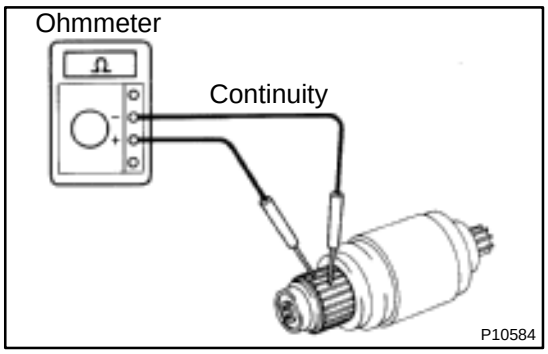

INSPECTION

1. INSPECT ARMATURE COIL

(a) Check the commutator for open circuit.
Using an ohmmeter, check that there is continuity between the segments of the commutator.

If there is no continuity between any segment, replace the armature.

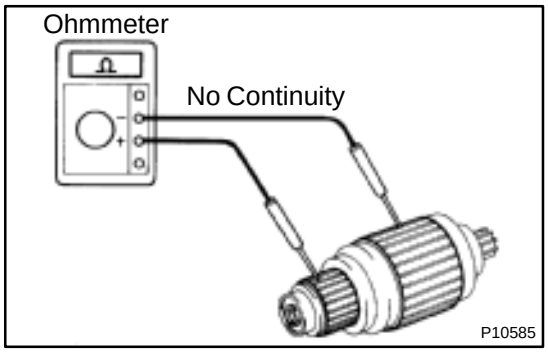

(b) Check the commutator for ground.
Using an ohmmeter, check that there is no continuity between the commutator and armature coil core.

If there is continuity, replace the armature.

2. INSPECT COMMUTATOR

(a) Check the commutator for the dirty and burnt surfaces.

If the surface is dirty or burnt, correct it with sandpaper (No.400) or on a lathe.

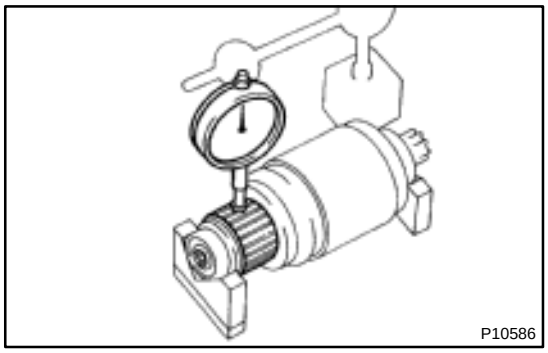

(b) Check for the commutator circle runout.
(1) Place the commutator on V–blocks.
(2) Using a dial gauge, measure the circle runout.
Maximum circle runout: 0.05 mm (0.0020 in.)

If the circle runout is greater than maximum, correct it on a lathe.

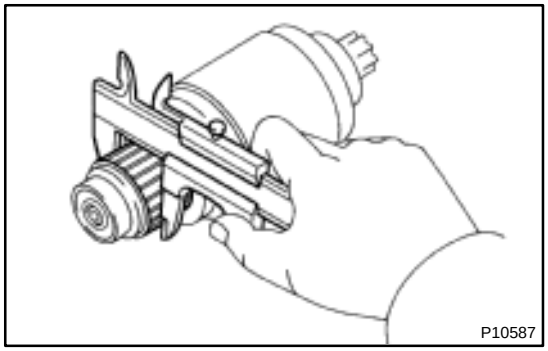

(c) Using vernier calipers, measure the commutator diameter.
Standard diameter:

1.4 kW	30.0 mm (1.180 in.)
1.8 kW	35.0 mm (1.378 in.)

Minimum diameter:

1.4 kW	29.0 mm (1.140 in.)
1.8 kW	34.0 mm (1.339 in.)

If the diameter is less than minimum, replace the armature.

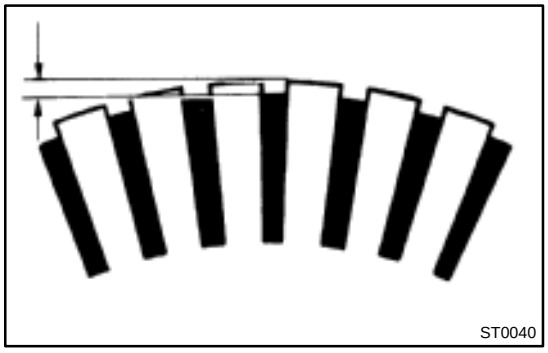

(d) Check that the undercut depth is clean and free of foreign materials. Smooth out the edge.
Standard undercut depth:

1.4 kW	0.6 mm (0.024 in.)
1.8 kW	0.7 mm (0.028 in.)

Minimum undercut depth: 0.2 mm (0.008 in.)

If the undercut depth is less than minimum, correct it with a hacksaw blade.

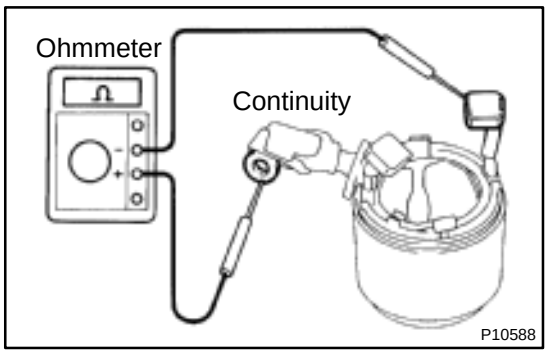

3. INSPECT FIELD COIL

(a) Check the field coil for open circuit.

Using an ohmmeter, check that there is continuity between the lead wire and field coil brush lead.

If there is no continuity, replace the field frame.

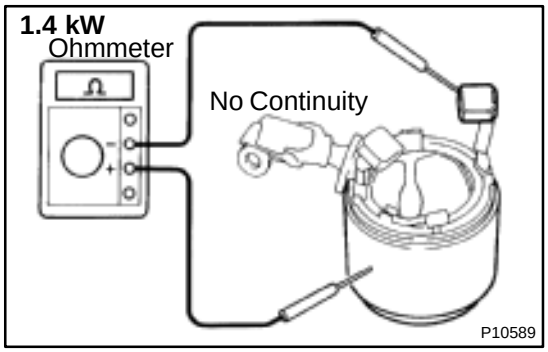

(b) 1.4 kW:

Check the field coil for ground.

Using an ohmmeter, check that there is no continuity between the field coil end and field frame.

If there is continuity, repair or replace the field frame.

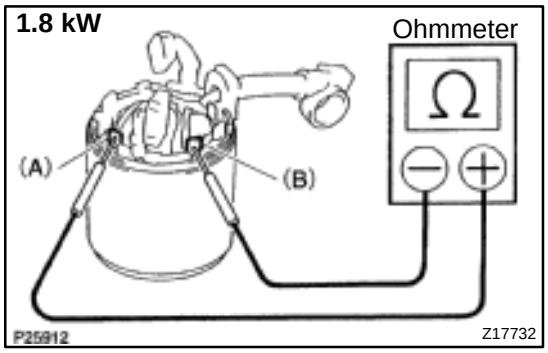

4. 1.8 kW: INSPECT SHUNT COIL FOR OPEN CIRCUIT

Using an ohmmeter, check that there is continuity between terminal (A) and (B).

Standard resistance: 1.4 – 1.9 Ω at 20˚C (68˚F)

If the resistance is not as specified, repair or replace the field frame.

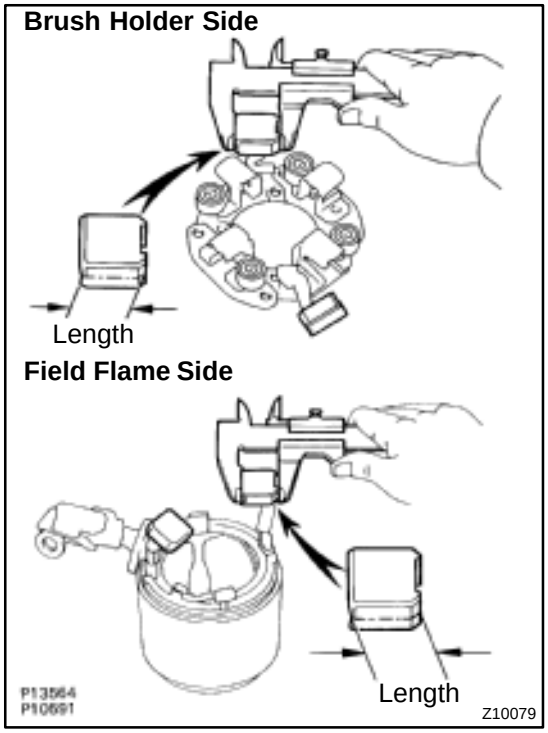

5. INSPECT BRUSHES

Using vernier calipers, measure the brush length.

Standard length:

1.4 kW	15.5 mm (0.610 in.)
1.8 kW	15.0 mm (0.591 in.)

Minimum length:

1.4 kW	10.0 mm (0.394 in.)
1.8 kW	9.0 mm (0.354 in.)

If the length is less than minimum, replace the brush holder and field frame.

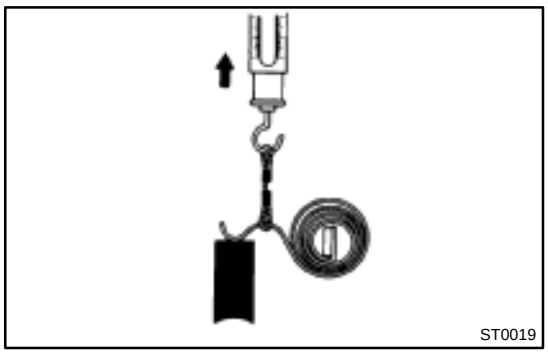

6. INSPECT BRUSH SPRINGS

Check the brush spring load.

Take the pull scale reading the instant the brush spring separates from the brush.

Standard spring installed load:

1.4 kW	17.6 – 23.5 N (1.8 – 2.4 kgf, 3.9 – 5.3 lbf)
1.8 kW	21.5 – 27.5 N (2.2 – 2.8 kgf, 4.9 – 6.2 lbf)

Minimum spring installed load:

1.4 kW	11.8 N (1.2 kgf, 2.6 lbf)
1.8 kW	12.7 N (1.3 kgf, 2.7 lbf)

If the installed load is less than minimum, replace the brush springs.

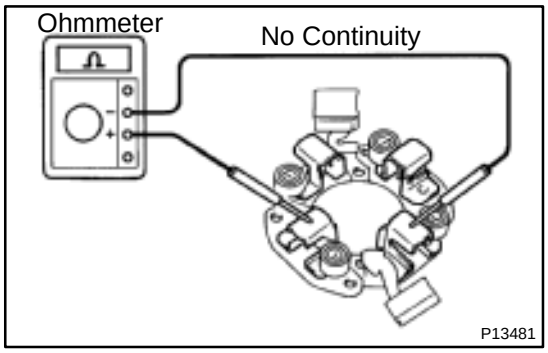

7. INSPECT BRUSH HOLDER

Check the brush holder insulation.

Using an ohmmeter, check that there is no continuity between the positive (+) and negative (–) brush holders.

If there is continuity, repair or replace the brush holder.

8. INSPECT CLUTCH AND GEAR

(a) Check the gear teeth on the pinion gear, idler gear and clutch assembly for wear or damage.

If damaged, replace the gear or clutch assembly.

If damaged, also check the ring gear of the flywheel/drive plate for wear or damage.

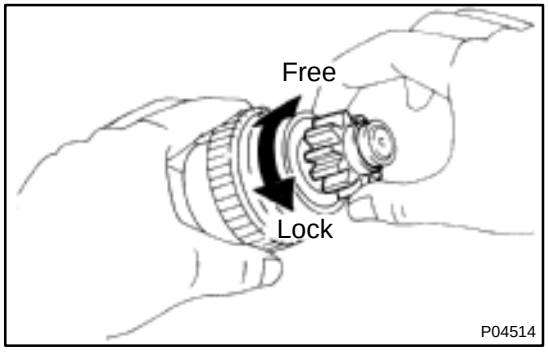

(b) Check the clutch pinion gear.

Hold the starter clutch and rotate the pinion gear counterclockwise, and check that it turns freely. Try to rotate the pinion gear clockwise and check that it locks.

If necessary, replace the clutch assembly.

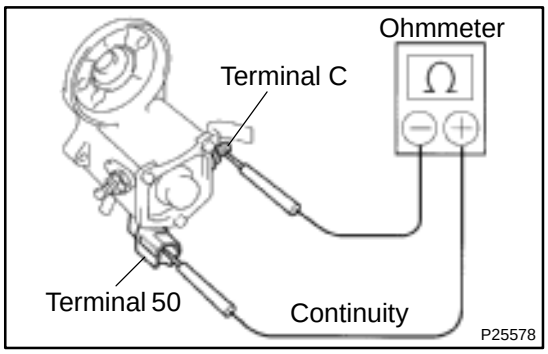

9. INSPECT MAGNETIC SWITCH

(a) Check the pull–in coil for open circuit.
Using an ohmmeter, check that there is continuity between terminals 50 and C.

If there is no continuity, check and replace the magnetic switch.

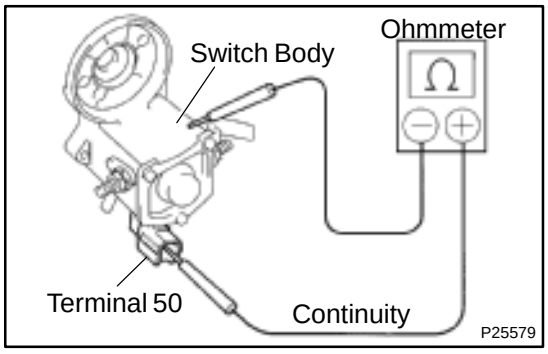

(b) Check the hold–in coil for open circuit.
Using an ohmmeter, check that there is continuity between terminal 50 and the switch body.

If there is no continuity, replace the magnetic switch.

10. INSPECT BEARING

Turn the bearing by hand while applying inward force.

If resistance is felt or the bearing sticks, replace the bearing.

(See page ST–11)

ST0I0–01

INSTALLATION

Installation is in the reverse order of removal. (See page ST–4)

STARTING SYSTEM

ST0HW–01

ON–VEHICLE INSPECTION

NOTICE:

Before changing the starter, check the following items again:

- **Connector connection**
- **Accessory installation, e.g.: theft deterrent system**

ST0HZ–01

REASSEMBLY

Reassembly is in the reverse order of disassembly (See page ST–5).

HINT:

Use high–temperature grease to lubricate the bearings, gears, return spring and steel ball when assembling the starter.

ST01K–02

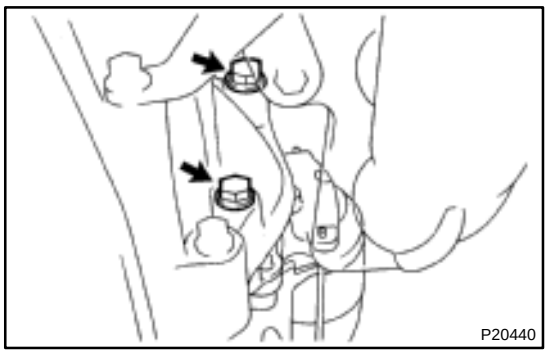

REMOVAL

REMOVE STARTER

(a) Disconnect the starter connector.

(b) Remove the nut, and disconnect the starter wire.
Torque: 8.8 N·m (90 kgf·cm, 70 in.·lbf)

(c) Remove the 2 bolts and starter.
Torque: 39 N·m (400 kgf·cm, 29 ft·lbf)

ST0HY–01

REPLACEMENT

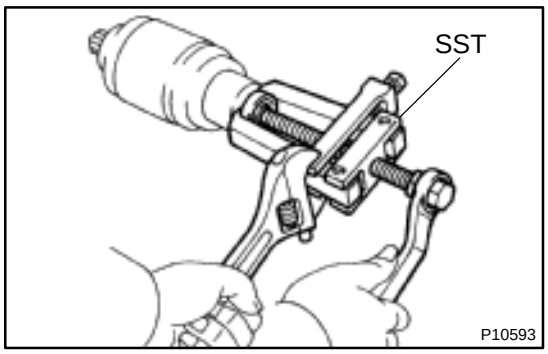

1. REPLACE FRONT BEARING

(a) Using SST, remove the bearing.
SST 09286–46011

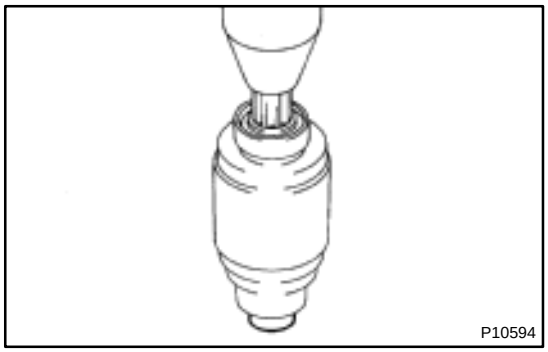

(b) Using a press, press in a new bearing.

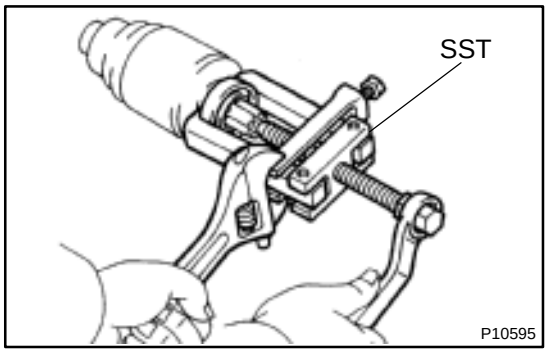

2. REPLACE REAR BEARING

(a) Using SST, remove the bearing.
SST 09286–46011

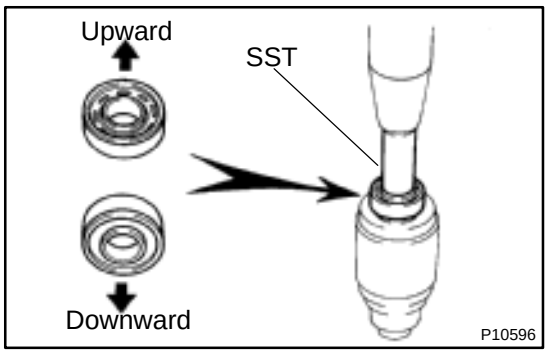

(b) Using SST and a press, press in a new bearing.

NOTICE:

Be careful of the bearing installation direction.

SST 09820–00030

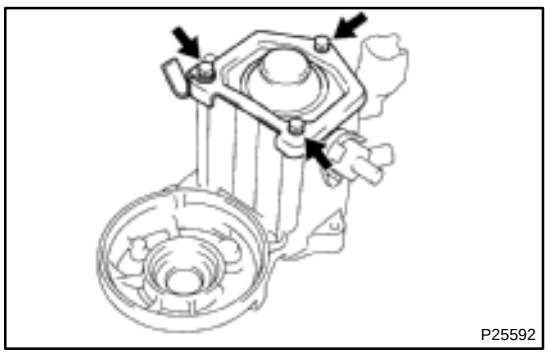

3. REPLACE MAGNETIC SWITCH TERMINAL KIT PARTS

(a) Remove the 3 bolts, lead clamp (1.8 kw) end cover, gasket and plunger.

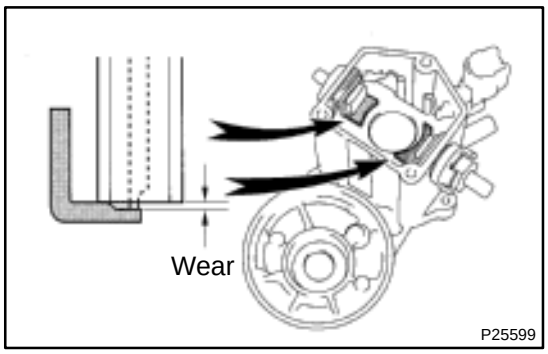

(b) Using vernier calipers, measure the contact plate for depth of wear.

Maximum wear: 0.9 mm (0.035 in.)

If the depth of wear is greater than the maximum, replace the contact plate.

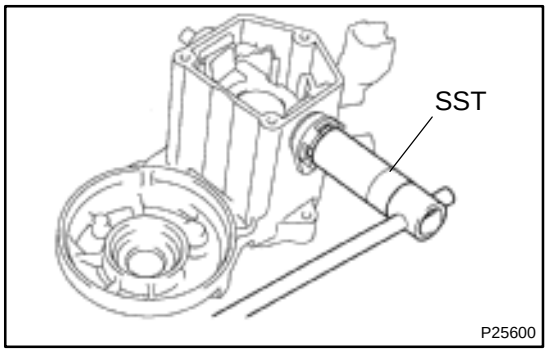

(c) Remove the terminal kit parts.

(1) Using SST, loosen the terminal nuts.

SST 09810–38140

(2) Terminal C:

Remove the terminal nut, wave washer, terminal insulator (outside), O–ring, terminal bolt, contact plate and terminal insulator (inside).

(3) Terminal 30:

Remove the terminal nut, wave washer, terminal insulator (outside), packing, O–ring, terminal bolt, contact plate, terminal insulator (inside) and insulation paper.

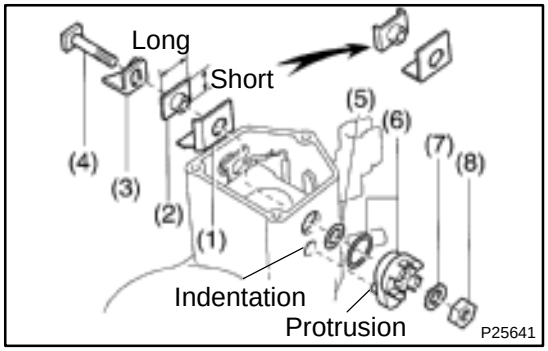

(d) Temporarily install these new terminal 30 kit parts:

(1) Insulation paper

(2) Terminal insulator (inside)

NOTICE:

Be careful to install the terminal insulator (inside) in the correct direction.

(3) Contact plate

(4) Terminal bolt

(5) O–ring

(6) Packing and terminal insulator (outside)

Install the packing to the terminal insulator, and install them.

HINT:

Match the protrusion of the insulator with the indentation of the housing.

(7) Wave washer

(8) Terminal nut

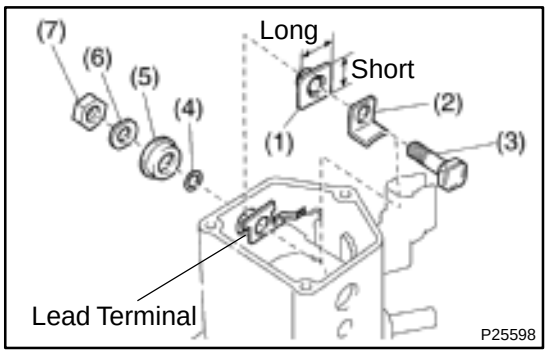

(e) Temporarily install these new terminal C kit parts:
(1) Terminal insulator (inside)

NOTICE:

Be careful to install the terminal insulator (inside) in the correct direction.

(2) Contact plate
(3) Terminal bolt
(4) O–ring
(5) Terminal insulator (outside)
(6) Wave washer
(7) Terminal nut

(f) Temporarily tighten the terminal nuts.

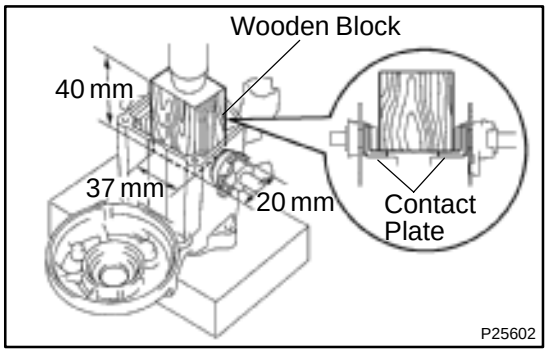

(g) Tighten the terminal nuts.
(1) Put a wooden block on the contact plate and press it down with a hand press.

Dimensions of wooden block:
20 x 37 x 40 mm (0.79 x 1.46 x 1.57 in.)
Press force: 981 N (100 kgf, 221 lbf)

NOTICE:

- **Check the diameter of the hand press ram. Then calculate the gauge pressure of the press when 981 N (100 kgf, 221 lbf) of force is applied.**
  Gauge pressure:

$$(\text{kgf/cm}^2) = \frac{100\ \text{kgf}}{\left(\frac{\text{Ram diameter (cm)}}{2}\right)^2 \times 3.14\ (\pi)}$$

$$(\text{psi}) = \frac{221\ \text{lbf}}{\left(\frac{\text{Ram diameter (in.)}}{2}\right)^2 \times 3.14\ (\pi)}$$

$$(\text{kPa}) = (\text{kgf/cm}^2) \times 98.1$$

$$(\text{kPa}) = (\text{psi}) \times 6.9$$

- **If the contact plate is not pressed down with the specified pressure, the contact plate may tilt due to coil deformation or the tightening of the nut.**

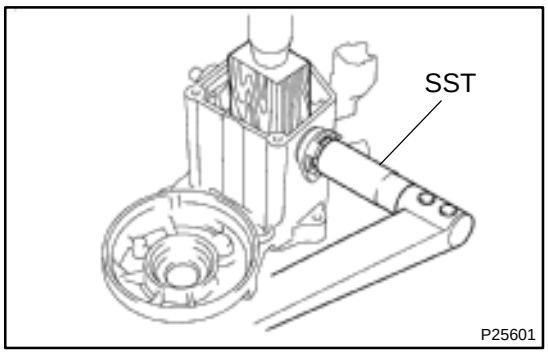

(2) Using SST, tighten the nuts to the specified torque.
SST 09810–38140
Torque: 17 N·m (173 kgf·cm, 13 ft·lbf)

NOTICE:
If the nut is over tightened, it may cause cracks on the inside of the insulator.

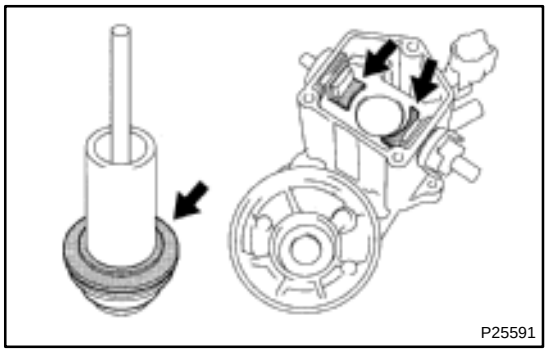

(h) Clean the contact surfaces of the remaining contact plate and plunger with a dry shop rag.

(i) Reinstall the plunger, a new gasket, the end cover and lead clanp (1.8 kW) with the 3 bolts.
Torque:
2.5 N·m (25 kgf·cm, 22 in.·lbf) for 1.4 kW
3.6 N·m (37 kgf·cm, 32 in.·lbf) for 1.8 kW

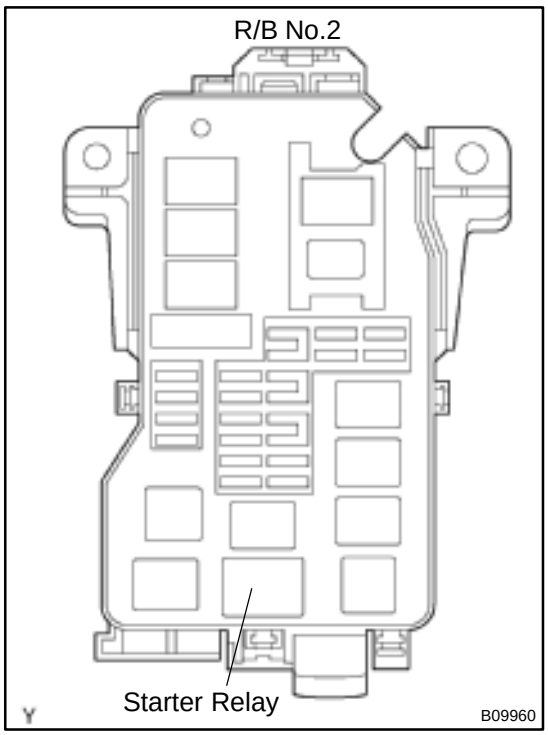

STARTER RELAY

ST0I1–01

INSPECTION

1. REMOVE STARTER RELAY (Marking: ST)

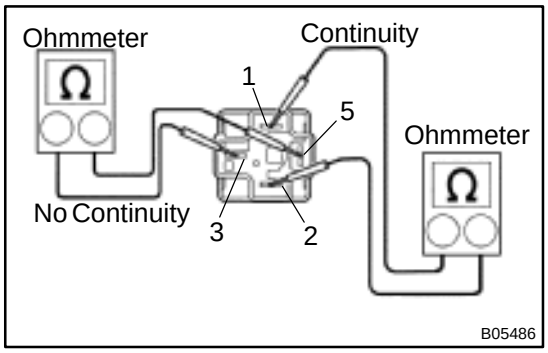

2. INSPECT STARTER RELAY

(a) Inspect the relay continuity.

(1) Using an ohmmeter, check that there is continuity between terminals 1 and 2.

If there is no continuity, replace the relay.

(2) Check that there is no continuity between terminals 3 and 5.

If there is continuity, replace the relay.

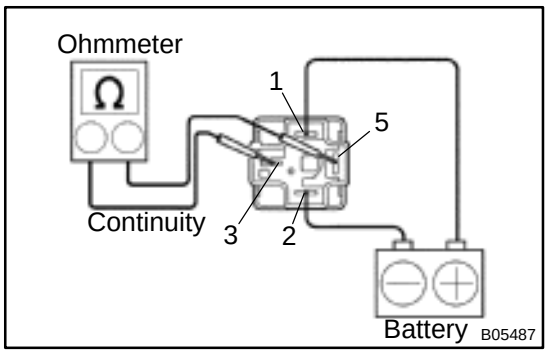

(b) Inspect the relay operation.

(1) Apply battery positive voltage across terminals 1 and 2.

(2) Using an ohmmeter, check that there is continuity between terminals 3 and 5.

If there is no continuity, replace the relay.

3. REINSTALL STARTER RELAY

ST01P–02

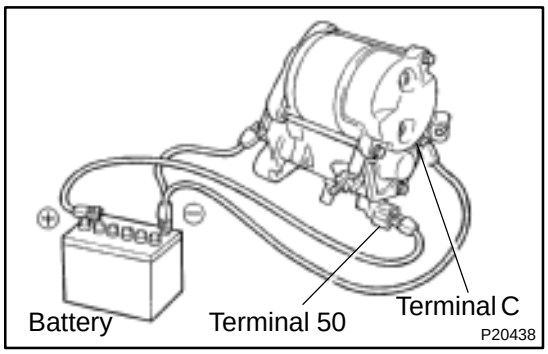

TEST

NOTICE:

These tests must be done within 3 to 5 seconds to avoid burning out the coil.

1. DO PULL–IN TEST

(a) Disconnect the field coil lead wire from terminal C.

(b) Connect the battery to the magnetic switch as shown. Check that the clutch pinion gear moves outward.

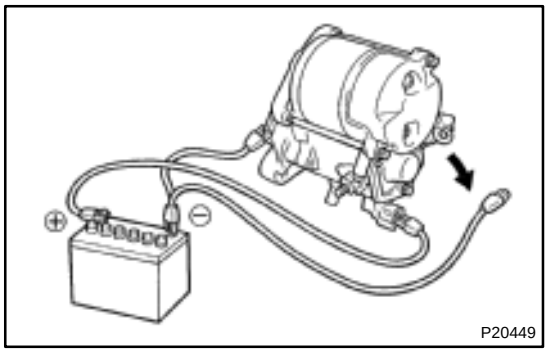

2. DO HOLD–IN TEST

With battery connected as above with the clutch pinion gear out, disconnect the negative (–) lead from terminal C. Check that the pinion gear remains out.

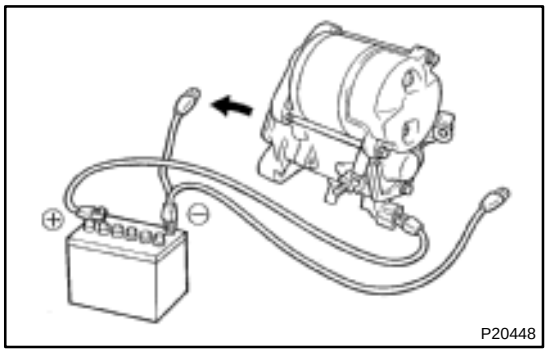

3. INSPECT CLUTCH PINION GEAR RETURN

Disconnect the negative (–) lead from the switch body. Check that the clutch pinion gear returns inward.

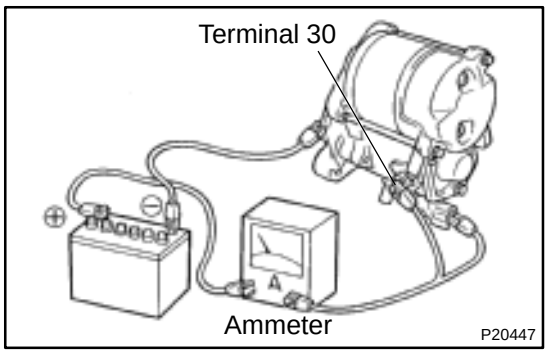

4. DO NO–LOAD PERFORMANCE TEST

(a) Connect the battery and ammeter to the starter as shown.

(b) Check that the starter rotates smoothly and steadily with the pinion gear moving out. Check that the ammeter reads the specified current.

Specified current:

1.4 kW	90 A or less at 11.5 V
1.8 kW	100 A or less at 11.5 V

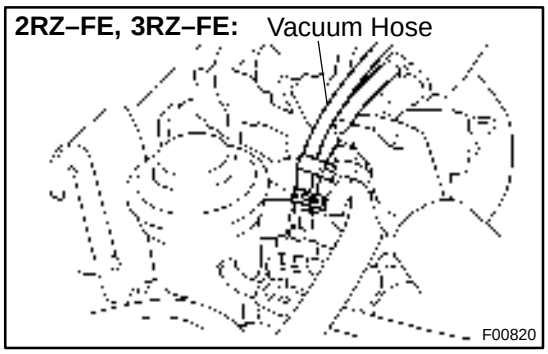

AIR CONTROL VALVE

SR047–01

INSPECTION

1. TURN AIR CONDITIONING SWITCH OFF

2. CHECK IDLE–UP

(a) Start engine and run it at idle.

(b) Fully turn the steering wheel.

(c) Check that the engine rpm decreases when the vacuum hose of the air control valve is pinched.

(d) Check that the engine rpm increases when the hose is released.

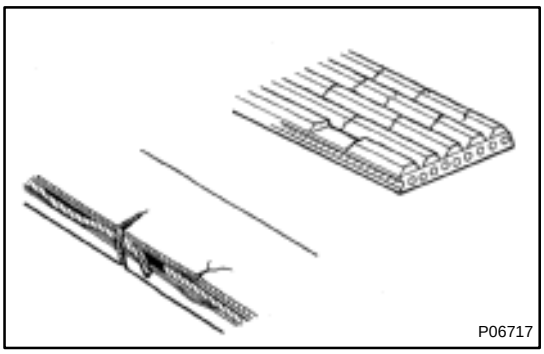
P06717

DRIVE BELT

SR044–01

INSPECTION

INSPECT DRIVE BELT

(a) Visually check the belt for excessive wear, frayed cords etc.

If any defect has been found, replace the drive belt.

HINT:

Cracks on the rib side of a belt are considered acceptable. If the belt has chunks missing from the ribs, it should be replaced.

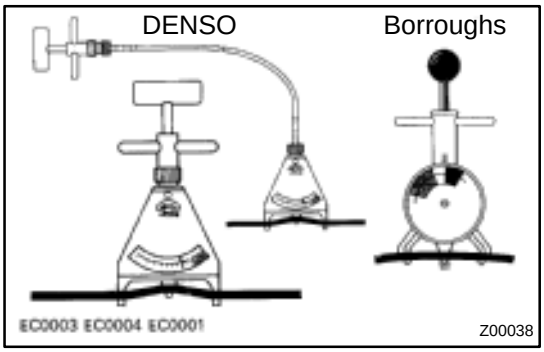

Z00038

(b) Using a belt tension gauge, measure the belt tension.
Belt tension gauge:
DENSO BTG–20 (95506–00020)
Borroughs No. BT–33–73F
Drive belt tension:
New belt: 135 – 180 lbf
Used belt: 85 – 120 lbf

If the belt tension is not as specified, adjust it.

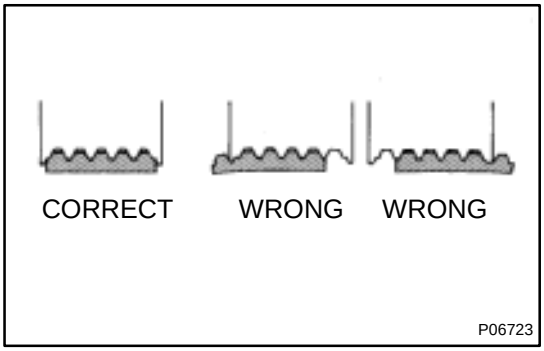

P06723

HINT:

- ”New belt” refers to a belt which has been used less than 5 minutes on a running engine.
- ”Used belt” refers to a belt which has been used on a running engine for 5 minutes or more.
- After installing a belt, check that it fits properly in the ribbed grooves.
- Check with your hand to confirm that the belt has not slipped out of the groove on the bottom of the pulley.
- After installing a new belt, run the engine for about 5 minutes and recheck the belt tension.

POWER STEERING FLUID

SR045–01

BLEEDING

1. CHECK FLUID LEVEL
(See page SR–5)

2. JACK UP FRONT OF VEHICLE AND SUPPORT IT WITH STANDS

3. TURN STEERING WHEEL

With the engine stopped, turn the wheel slowly from lock to lock several times.

4. LOWER VEHICLE

5. START ENGINE

Run the engine at idle for a few minutes.

6. TURN STEERING WHEEL

(a) With the engine idling, turn the wheel to left or right full lock and keep it there for 2–3 seconds, then turn the wheel to the opposite full lock and keep it there for 2–3 seconds.

(b) Repeat (a) several times.

7. STOP ENGINE

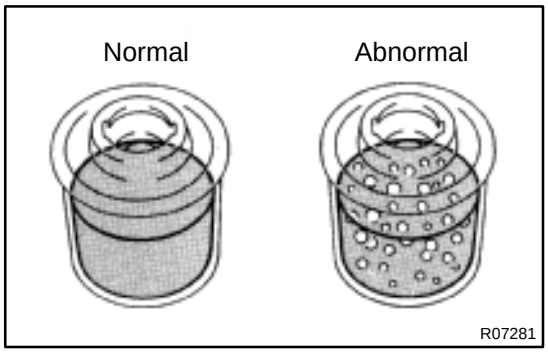

8. CHECK FOR FOAMING OR EMULSIFICATION

If the system has to be bled twice specifically because of foaming or emulsification, check for fluid leaks in the system.

9. CHECK FLUID LEVEL
(See page SR–5)

SR046–01

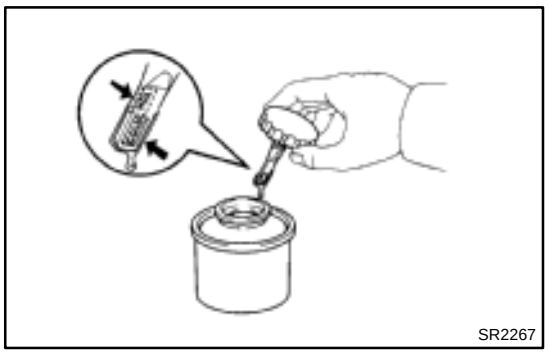
SR2267

INSPECTION

1. CHECK FLUID LEVEL

(a) Keep the vehicle level.

(b) With the engine stopped, check the fluid level in the oil reservoir.

If necessary, add fluid.

Fluid: ATF DEXRON® II or III

HINT:

Check that the fluid level is within the HOT LEVEL range on the reservoir cap dipstick. If the fluid is cold, check that it is within the COLD LEVEL range.

(c) Start the engine and run it at idle.

(d) Turn the steering wheel from lock to lock several times to boost fluid temperature.

Fluid temperature: 80˚C (176˚F)

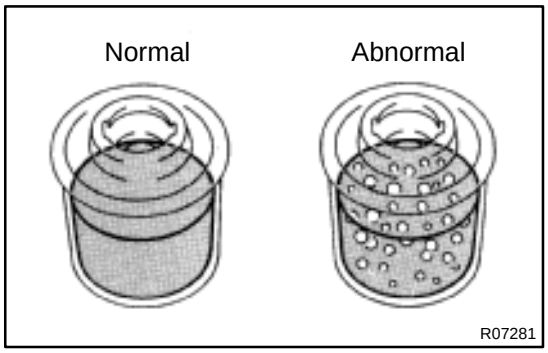

R07281

(e) Check for foaming or emulsification.

If there is foaming or emulsification, bleed power steering system.

(See page SR–4)

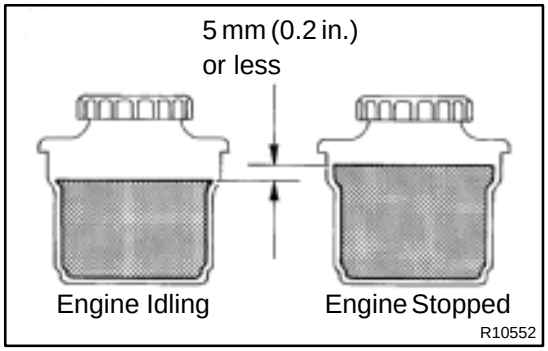

R10552

(f) With the engine idling, measure the fluid level in the oil reservoir.

(g) Stop the engine.

(h) Wait a few minutes and remeasure the fluid level in the oil reservoir.

Maximum fluid level rise: 5 mm (0.20 in.)

If a problem is found, bleed power steering system.

(See page SR–4)

(i) Check the fluid level.

2. CHECK STEERING FLUID PRESSURE

(a) 5VZ–FE Engine:
Loosen the 3 bolts and air cleaner assembly.
(See page SR–48)

(b) Disconnect the pressure feed tube from the PS vane pump.
(2RZ–FE, 3RZ–FE Engines: See page SR–40)
(5VZ–FE Engine: See page SR–50)

(c) Connect SST, as shown below.
SST 09640–10010 (09641–01010, 09641–01030, 09641–01060)

NOTICE:
Check that the valve of the SST is in the open position.

2RZ–FE, 3RZ–FE

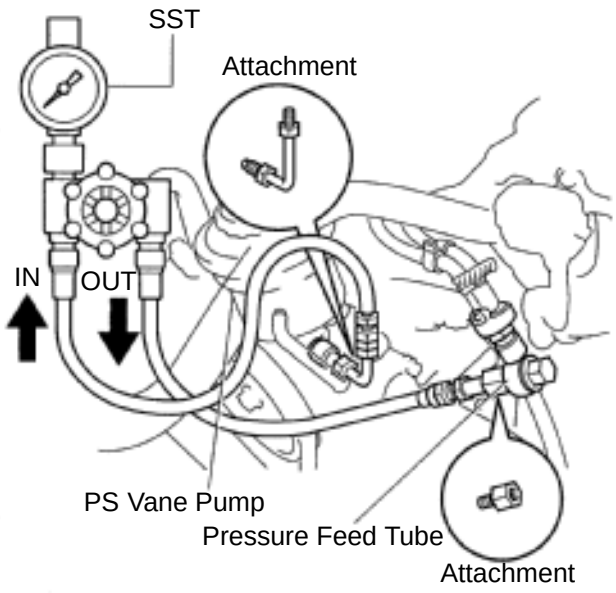

5VZ–FE

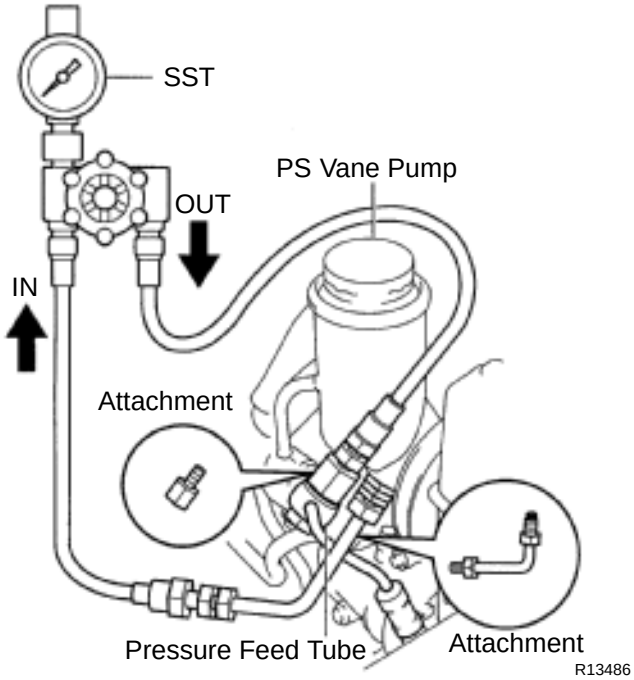

(d) Bleed the power steering system.
(See page SR–4)

(e) Start the engine and run it at idle.

(f) Turn the steering wheel from lock to lock several times to boost fluid temperature.
Fluid temperature: 80 ˚C (176 ˚F)

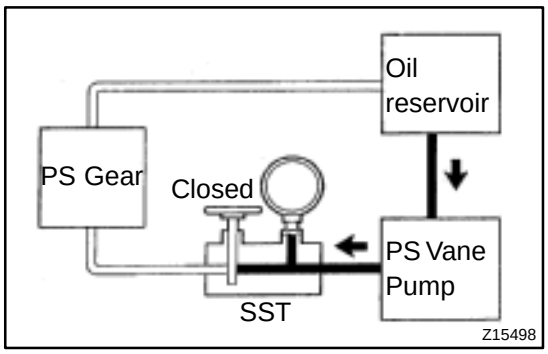

(g) With the engine idling, close the valve of the SST and observe the reading on the SST.
Minimum fluid pressure:
8,336 kPa (85 kgf/cm^2, 1,209 psi)

NOTICE:
- **Do not keep the valve closed for more than 10 seconds.**
- **Do not let the fluid temperature become too high.**

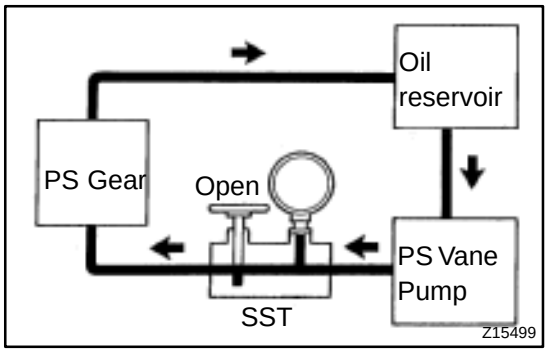

(h) With the engine idling, open the valve fully.
(i) Measure the fluid pressure at engine speeds of 1,000 rpm and 3,000 rpm.
Difference fluid pressure:
490 kPa (5 kgf/cm^2, 71 psi) or less

NOTICE:
Do not turn the steering wheel.

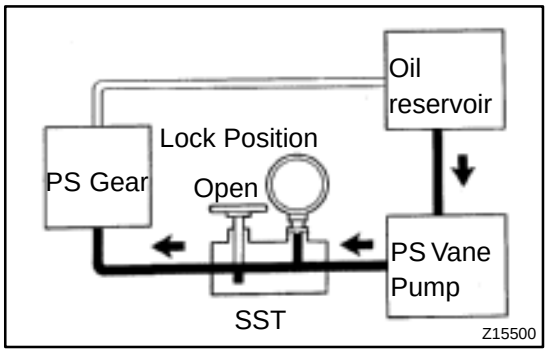

(j) With the engine idling and valve fully opened, turn the steering wheel to full lock.
Minimum fluid pressure:
8,336 kPa (85 kgf/cm^2, 1,209 psi)

NOTICE:
- **Do not maintain lock position for more than 10 seconds.**
- **Do not let the fluid temperature become too high.**

(k) Disconnect the SST.
(l) Connect the pressure feed tube.
(2RZ–FE, 3RZ–FE Engines: See page SR–47)
(5VZ–FE Engine: See page SR–57)
(m) 5VZ–FE Engine:
Install the air cleaner and 3 bolts.
(See page SR–48)
(n) Bleed the power steering system.
(See page SR–4)

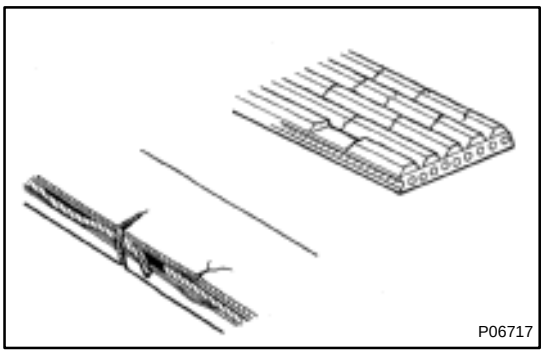
P06717

DRIVE BELT

SR044–01

INSPECTION

INSPECT DRIVE BELT

(a) Visually check the belt for excessive wear, frayed cords etc.

If any defect has been found, replace the drive belt.

HINT:

Cracks on the rib side of a belt are considered acceptable. If the belt has chunks missing from the ribs, it should be replaced.

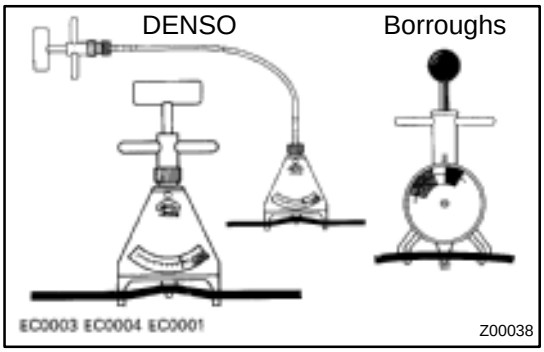

Z00038

(b) Using a belt tension gauge, measure the belt tension.
Belt tension gauge:
DENSO BTG–20 (95506–00020)
Borroughs No. BT–33–73F
Drive belt tension:
New belt: 135 – 180 lbf
Used belt: 85 – 120 lbf

If the belt tension is not as specified, adjust it.

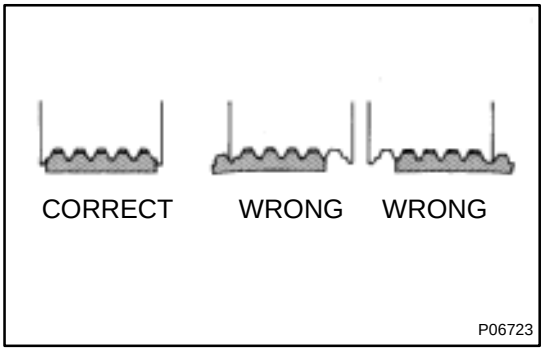

P06723

HINT:

- ”New belt” refers to a belt which has been used less than 5 minutes on a running engine.
- ”Used belt” refers to a belt which has been used on a running engine for 5 minutes or more.
- After installing a belt, check that it fits properly in the ribbed grooves.
- Check with your hand to confirm that the belt has not slipped out of the groove on the bottom of the pulley.
- After installing a new belt, run the engine for about 5 minutes and recheck the belt tension.

POWER STEERING GEAR (4WD and PRE RUNNER)

SR05F–02

COMPONENTS

HINT:

Pre runner is the model described below.

RZN191L–TRPDKAB, RZN196L–CRPDKAB, VZN195L–CRPDKAB

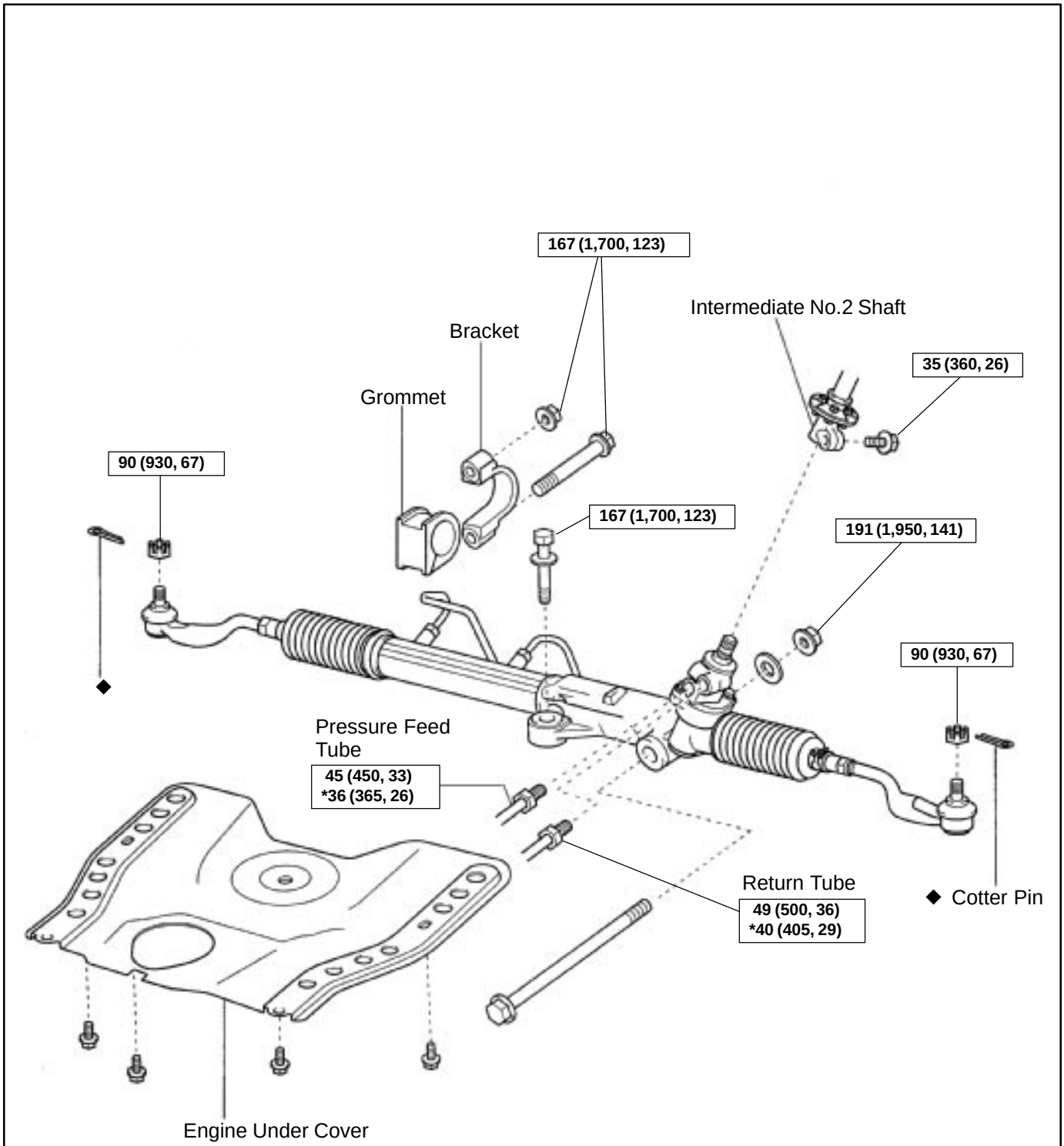

N·m (kgf·cm, ft·lbf) : Specified torque

◆ Non–reusable part

R13741

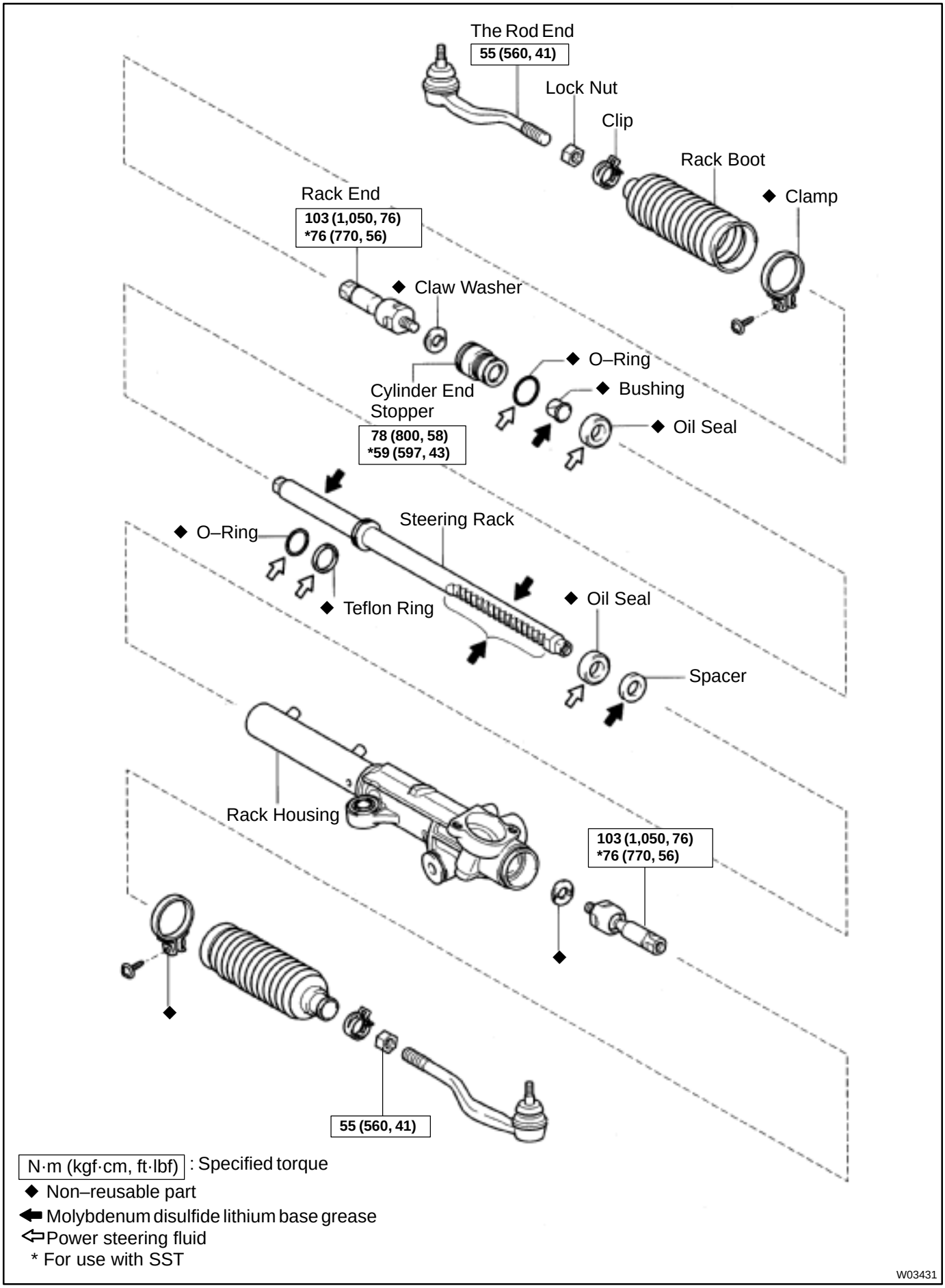

N·m (kgf·cm, ft·lbf) : Specified torque
◆ Non–reusable part
⬅ Molybdenum disulfide lithium base grease
⇦ Power steering fluid
* For use with SST

W03431

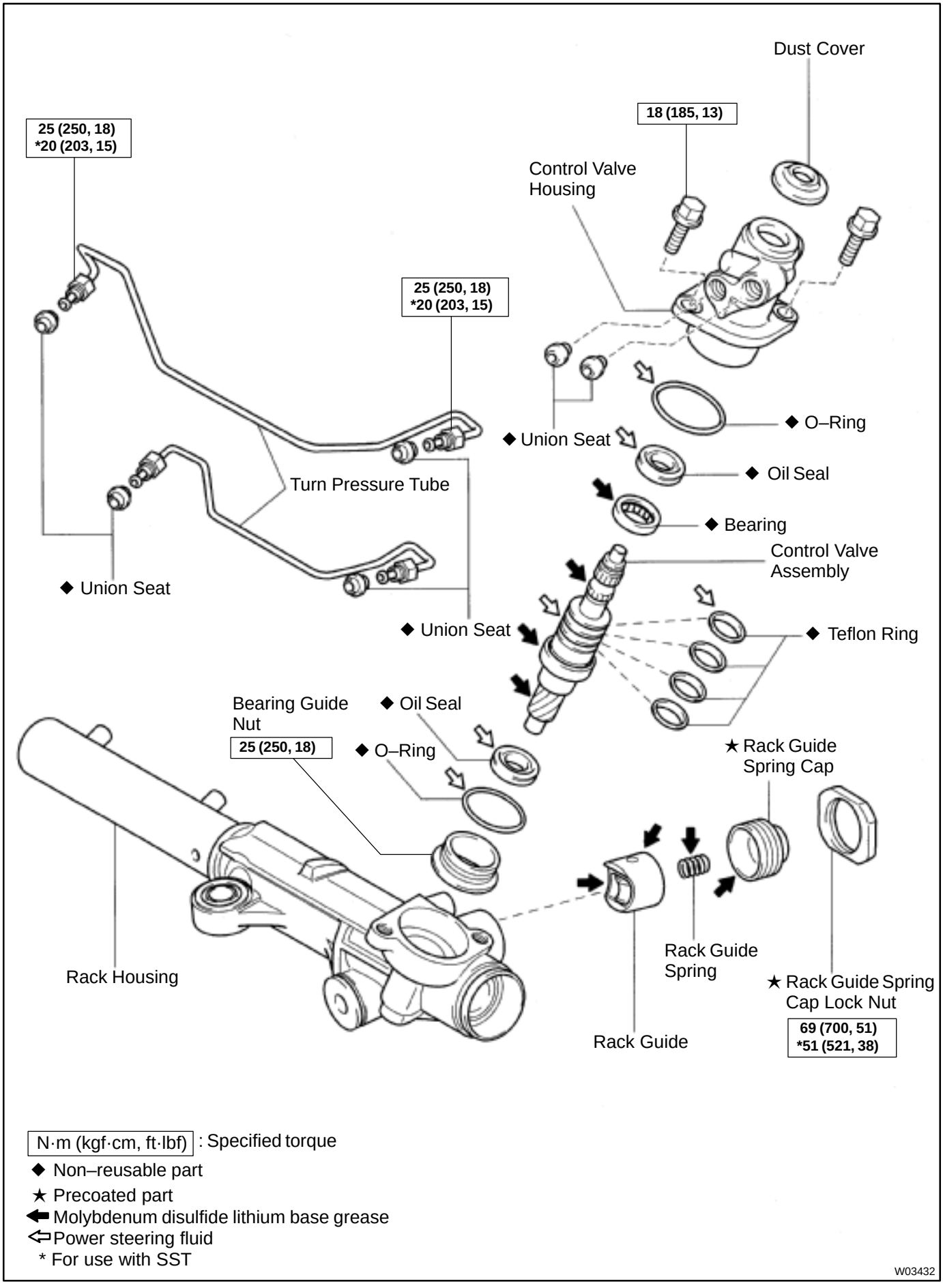
Dust Cover
18 (185, 13)
25 (250, 18)
*20 (203, 15)
Control Valve
Housing
25 (250, 18)
*20 (203, 15)
◆ O–Ring
◆ Union Seat
◆ Oil Seal
Turn Pressure Tube
◆ Bearing
Control Valve
Assembly
◆ Union Seat
◆ Union Seat
◆ Teflon Ring
Bearing Guide
Nut
25 (250, 18)
◆ Oil Seal
◆ O–Ring
★ Rack Guide
Spring Cap
Rack Housing
Rack Guide
Spring
★ Rack Guide Spring
Cap Lock Nut
69 (700, 51)
*51 (521, 38)
Rack Guide
N·m (kgf·cm, ft·lbf) : Specified torque
◆ Non–reusable part
★ Precoated part
Molybdenum disulfide lithium base grease
Power steering fluid
* For use with SST
W03432

SR05H–02

DISASSEMBLY

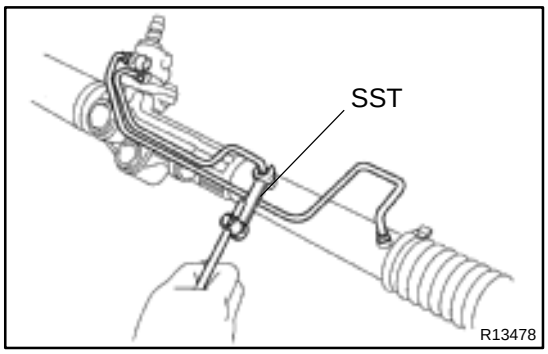

NOTICE:

When using a vise, do not overtighten it.

1. REMOVE 2 TURN PRESSURE TUBES

(a) Using SST, remove the tube.
SST 09633–00020

(b) Remove the union seat from the rack housing.

(c) Remove the union seat from the control valve housing.

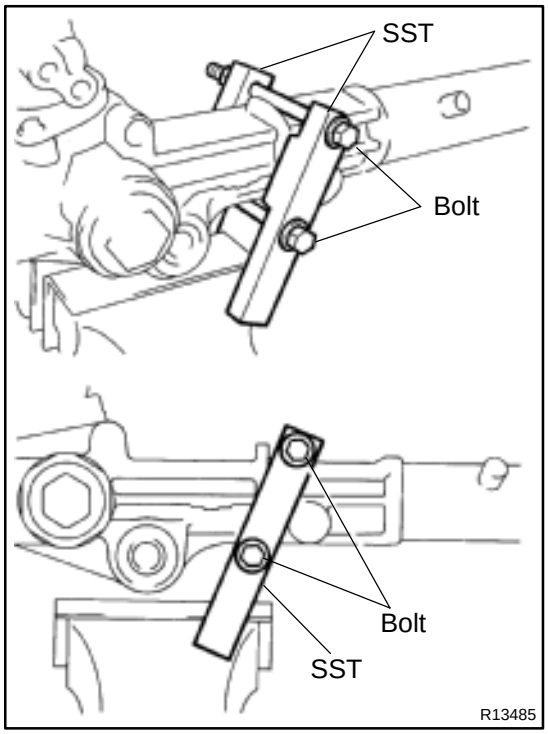

2. SECURE PS GEAR ASSEMBLY IN VISE

Using SST and 2 bolts, secure the gear assembly in a vise, as shown in the illustration.

SST 09612–00012

Reference:
Bolt: 90105–10346
Nut: 90170–10198

HINT:

Use 2 of the same type of SST.

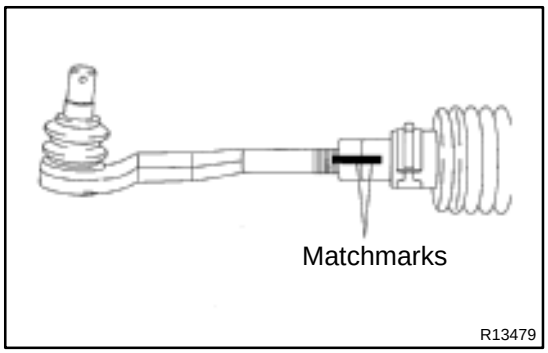

3. REMOVE RH AND LH TIE ROD ENDS AND LOCK NUTS

Place matchmarks on the tie rod end and rack end.

4. REMOVE RH AND LH CLIPS, RACK BOOTS AND CLAMPS

NOTICE:

- **Be careful not to damage the boot.**
- **Mark the RH and LH boots.**

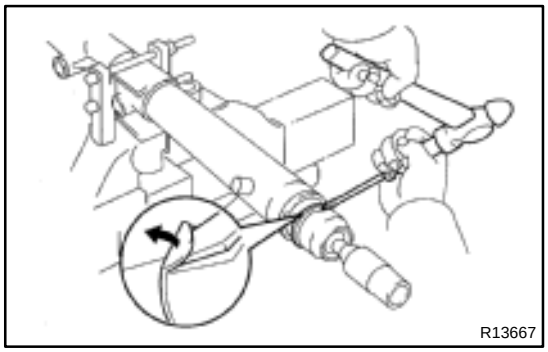

5. REMOVE RH AND LH RACK ENDS AND CLAW WASHERS

(a) Using a screwdriver and hammer, stake back the washer.

NOTICE:

Avoid any impact to the steering rack.

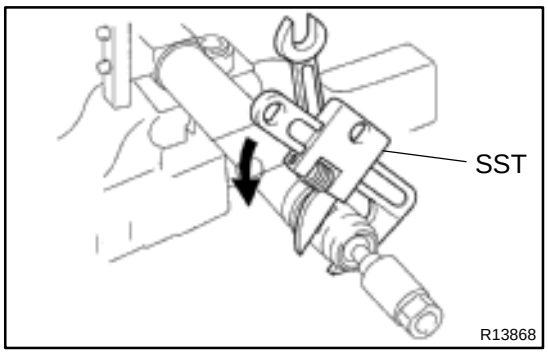

(b) Using a spanner to hold the steering rack steady, and using SST, remove the rack end.
SST 09922–10010

NOTICE:

- **Use SST 09922–10010 in the direction shown in the illustration.**
- **Mark the RH and LH rack ends.**

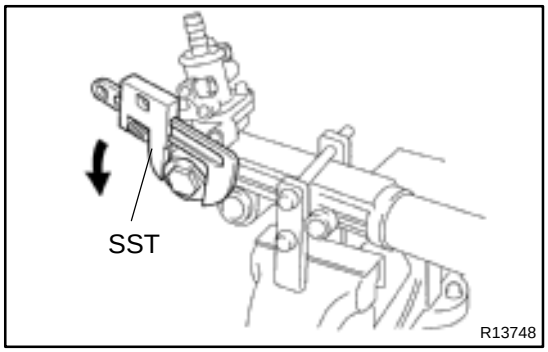

6. REMOVE RACK GUIDE SPRING CAP LOCK NUT

Using SST, remove the nut.
SST 09922–10010

NOTICE:

Use SST 09922–10010 in the direction shown in the illustration.

7. REMOVE RACK GUIDE SPRING CAP

8. REMOVE RACK GUIDE SPRING AND RACK GUIDE

9. REMOVE DUST COVER

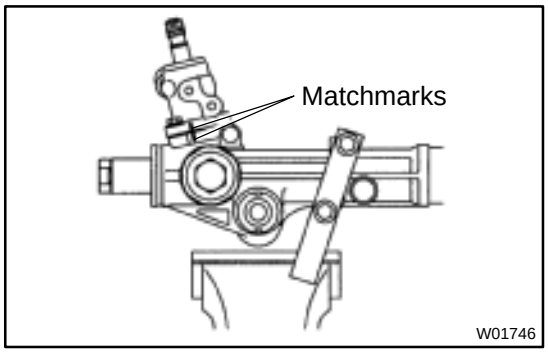

10. REMOVE CONTROL VALVE HOUSING WITH CONTROL VALVE ASSEMBLY

(a) Place matchmarks on the valve housing and rack housing.
(b) Remove the 2 bolts.
(c) Pull out the control valve assembly with the valve housing.
(d) Remove the O–ring from the rack housing.

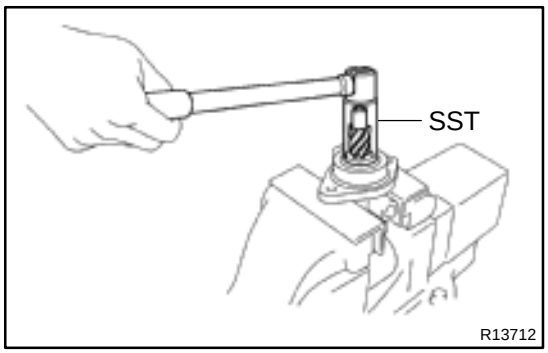

11. REMOVE CONTROL VALVE ASSEMBLY

(a) Using SST, loosen the bearing guide nut.
SST 09631–20060

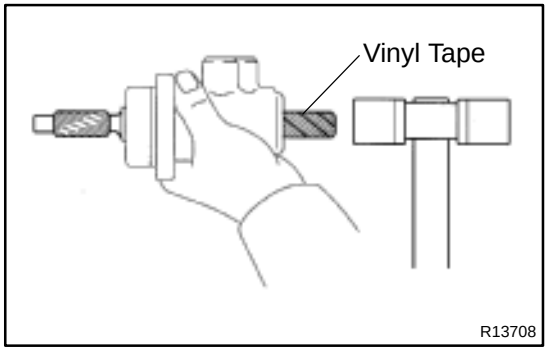

(b) Wind vinyl tape to the control valve shaft.
(c) Using a plastic hammer, tap out the valve assembly with the nut from the control valve housing.

NOTICE:

Be careful not to damage the oil seal lip.

(d) Remove the nut from the valve assembly.

NOTICE:

Be careful not to damage the oil seal lip.

(e) Remove the O–ring from the nut.

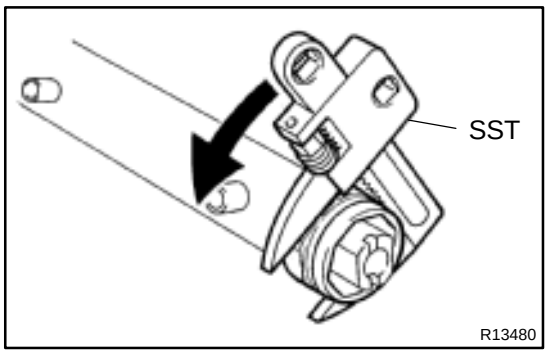

12. REMOVE CYLINDER END STOPPER

(a) Using SST, remove the stopper.
SST 09922–10010

NOTICE:

Use SST 09922–10010 in the direction shown in the illustration.

(b) Remove the O–ring from the stopper.

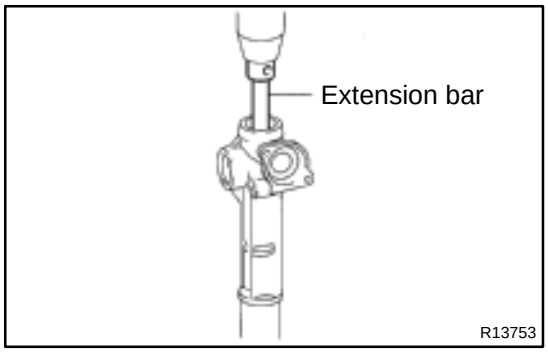

13. REMOVE STEERING RACK AND OIL SEAL

(a) Using an extension bar and socket wrench (24 mm), press out the rack and oil seal.

NOTICE:

Take care not to drop the rack.

(b) Remove the oil seal from the rack.

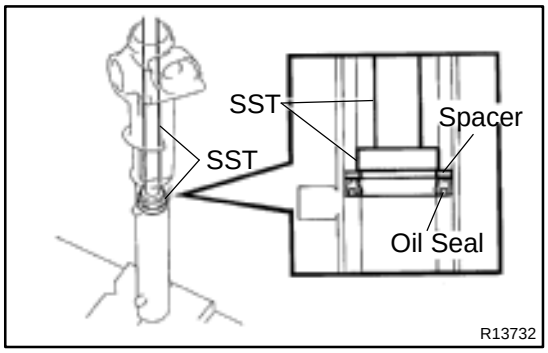

14. REMOVE OIL SEAL AND SPACER

Using SST, press out the oil seal and spacer.
SST 09950–60010 (09951–00360),
09950–70010 (09951–07360)

SR05I–02

INSPECTION

1. INSPECT STEERING RACK

(a) Using a dial indicator, check the rack for runout and for teeth wear and damage.

Maximum runout: 0.3 mm (0.0118 in.)

(b) Check the back surface for wear and damage.

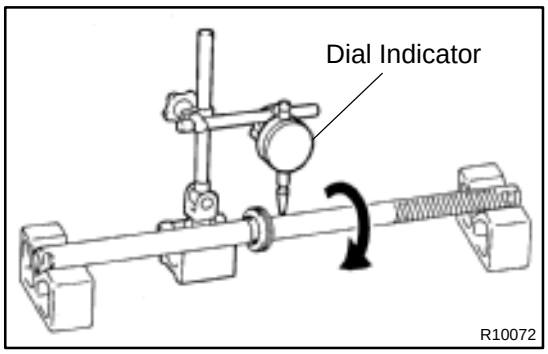

2. IF NECESSARY, REPLACE OIL SEAL AND BEARING

(a) Using SST, press out the oil seal and bearing from the control valve housing.

SST 09950–60010 (09951–00260), 09950–70010 (09951–07150)

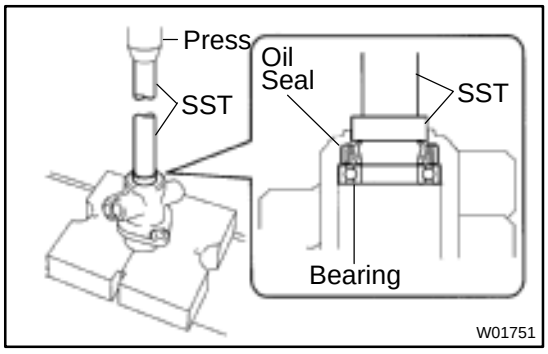

(b) Coat a new oil seal lip with power steering fluid.

(c) Using SST, press in the oil seal.

SST 09950–60010 (09951–00180, 09951–00330, 09952–06010), 09950–70010 (09951–07150)

NOTICE:

Make sure to install the oil seal facing the correct direction.

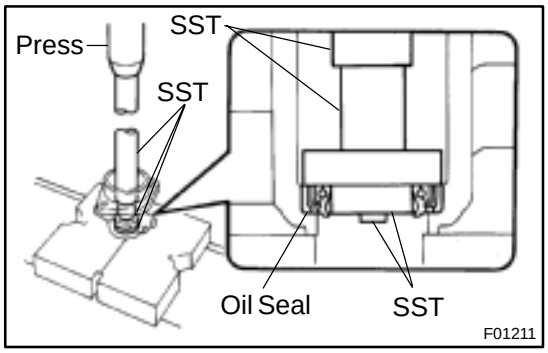

(d) Coat a new bearing with molybdenum disulfide lithium base grease.

(e) Using SST, press in the bearing.

SST 09950–60010 (09951–00330), 09950–70010 (09951–07150)

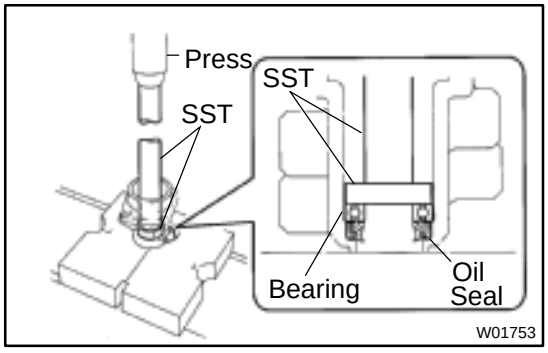

3. IF NECESSARY, REPLACE OIL SEAL

(a) Using SST, press out the oil seal from the bearing guide nut.

SST 09950–60010 (09951–00320), 09950–70010 (09951–07100)

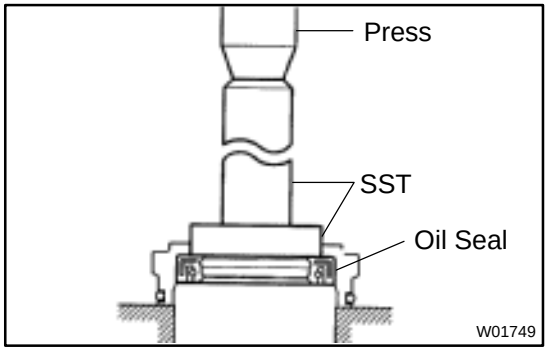

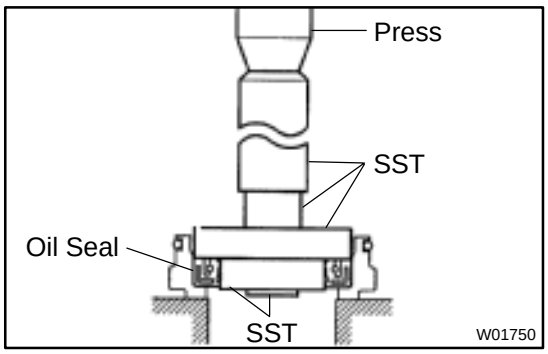

(b) Coat a new oil seal lip with power steering fluid.
(c) Using SST, press in the oil seal.
SST 09950–60010 (09951–00280, 09951–00360, 09952–06010), 09950–70010 (09951–07100)

NOTICE:
Make sure to install the oil seal facing the correct direction.

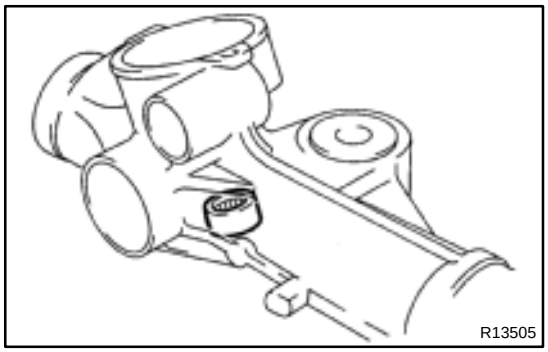

4. INSPECT BEARING
(a) Check the needle roller bearing of the rack housing for pitmarks or damage.

If faulty, replace the rack housing.
(b) Coat the inside of the bearing with molybdenum disulfide lithium base grease.

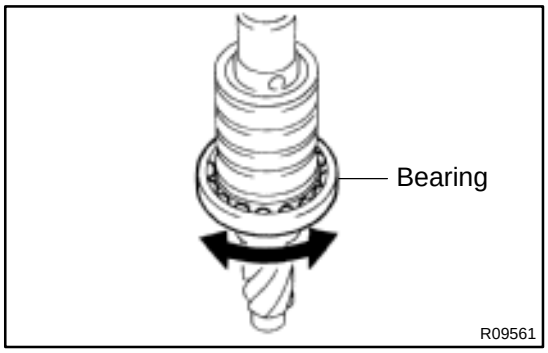

5. INSPECT BEARING
(a) Check the bearing rotation condition and check for abnormal noise.

If the bearing is worn or damaged, replace the control valve assembly.
(b) Coat the bearing with molybdenum disulfide lithium base grease.

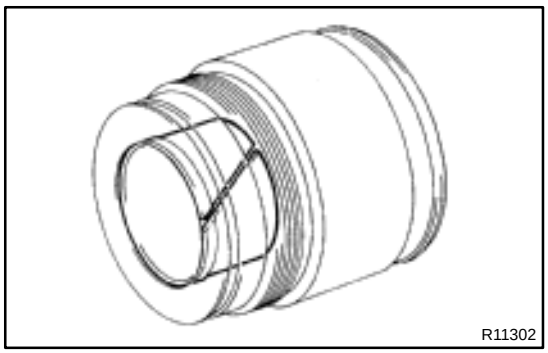

6. INSPECT BUSHING
(a) Check the inside of the bushing of the cylinder end stopper for cracks.

If faulty, replace the bushing.
(b) Coat the inside of the bushing with molybdenum disulfide lithium base grease.

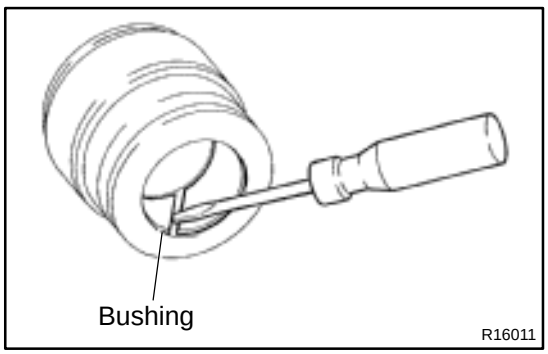

7. IF NECESSARY, REPLACE BUSHING
(a) Using a screwdriver, remove the bushing from the cylinder end stopper.

NOTICE:
Be careful not to damage the cylinder end stopper.
(b) Coat the inside of a new bushing with molybdenum disulfide lithium base grease.
(c) Install the bushing.

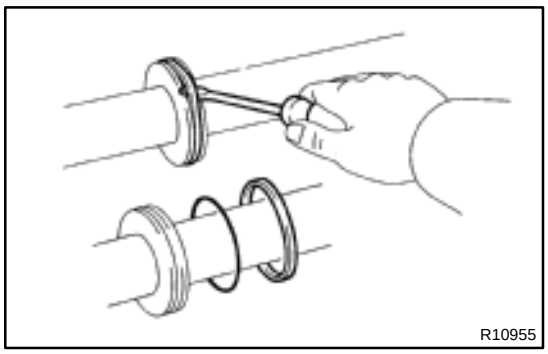

8. IF NECESSARY, REPLACE TEFLON RING AND O–RING

(a) Using a screwdriver, remove the teflon ring and O–ring from the steering rack.

NOTICE:

Be careful not to damage the groove for the ring.

(b) Coat a new O–ring with power steering fluid and install it.

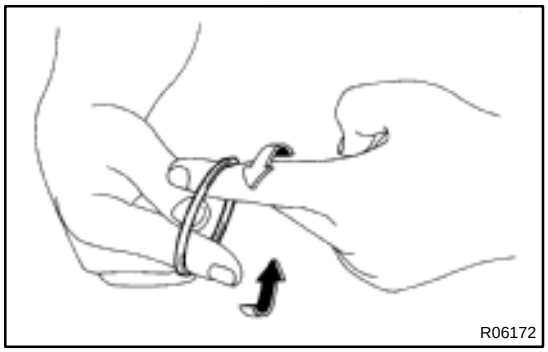

(c) Expand a new teflon ring with your fingers.

NOTICE:

Be careful not to overexpand the ring.

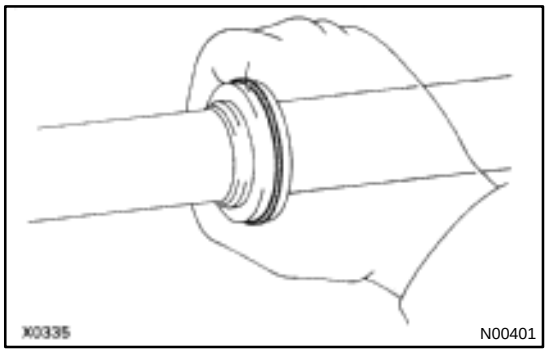

(d) Coat the ring with power steering fluid.

(e) Install the ring to the rack, and settle it down with your fingers.

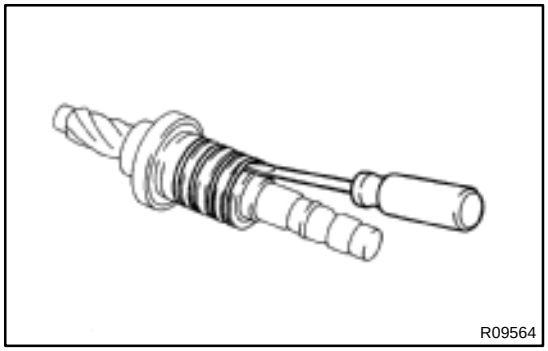

9. IF NECESSARY, REPLACE TEFLON RINGS

(a) Using a screwdriver, remove the 4 rings from the control valve assembly.

NOTICE:

Be careful not to damage the grooves for the ring.

(b) Expand 4 new rings with your fingers.

NOTICE:

Be careful not to overexpand the ring.

(c) Coat the rings with power steering fluid.

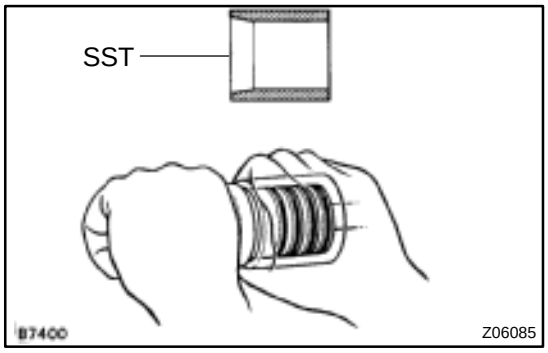

(d) Install the rings to the control valve assembly, and settle them down with your fingers.

(e) Carefully slide the tapered end of SST over the rings until the ring fits to the steering rack.

SST 09631–20081

NOTICE:

Be careful not to damage the rings.

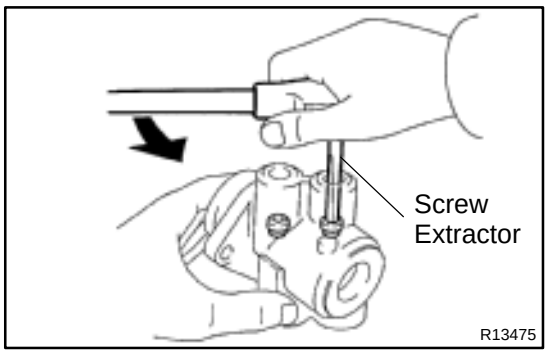

10. IF NECESSARY, REPLACE UNION SEATS

(a) Using a screw extractor, remove the 2 seats from the control valve housing.

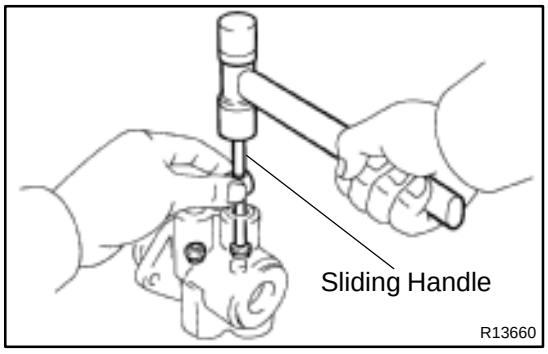

(b) Using a plastic hammer and sliding handle, lightly tap in 2 new seats.

NOTICE:

Before installing the union seat, remove dust sticking to the control valve housing.

SR05K–02

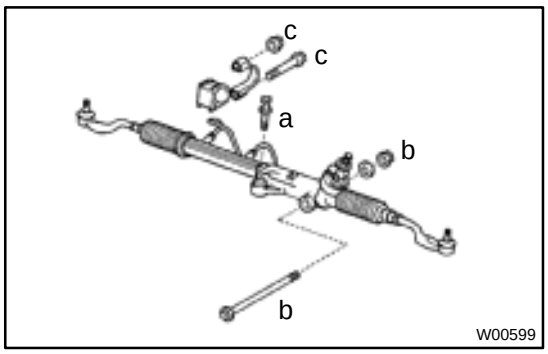

INSTALLATION

1. INSTALL GROMMET AND BRACKET

2. INSTALL PS GEAR ASSEMBLY

(a) Torque the gear assembly set bolt.
Torque: 167 N·m (1,700 kgf·cm, 123 ft·lbf)

(b) Torque the gear assembly set bolt and nut.
Torque: 191 N·m (1,950 kgf·cm, 141 ft·lbf)

(c) Torque the bolt and nut to the bracket.
Torque: 167 N·m (1,700 kgf·cm, 123 ft·lbf)

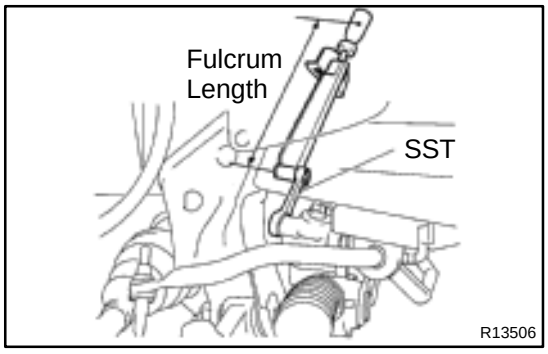

3. CONNECT PRESSURE FEED AND RETURN TUBES

Using SST, connect the tube.
SST 09631–22020
Pressure feed tube:
Torque: 36 N·m (365 kgf·cm, 26 ft·lbf)
Return tube:
Torque: 40 N·m (405 kgf·cm, 29 ft·lbf)

HINT:

- Use a torque wrench with a fulcrum length of 300 mm (11.81 in.).
- This torque value is effective in case that SST is parallel to a torque wrench.

4. CONNECT INTERMEDIATE NO. 2 SHAFT
(See page SR–20)

5. CONNECT RH AND LH TIE ROD ENDS
(See page SA–121)

6. POSITION FRONT WHEEL FACING STRAIGHT AHEAD

HINT:
Do it with the front of the vehicle jacked up.

7. CENTER SPIRAL CABLE
(See page SR–20)

8. INSTALL STEERING WHEEL

(a) Align the matchmarks on the wheel and steering column main shaft.

(b) Temporarily tighten the wheel set nut.

(c) Connect the connector.

9. BLEED POWER STEERING SYSTEM
(See page SR–4)

10. CHECK STEERING WHEEL CENTER POINT

11. TORQUE STEERING WHEEL SET NUT
Torque: 35 N·m (360 kgf·cm, 26 ft·lbf)

12. INSTALL STEERING WHEEL PAD
(See page SR–20)

13. CHECK FRONT WHEEL ALIGNMENT
(See page SA–9)

14. INSTALL ENGINE UNDER COVER
Tighten the 4 bolts.

SR05J–02

REASSEMBLY

NOTICE:

When using a vise, do not overtighten it.

1. COAT WITH POWER STEERING FLUID OR MOLYBDENUM DISULFIDE LITHIUM BASE GREASE
(See pages SR–90)

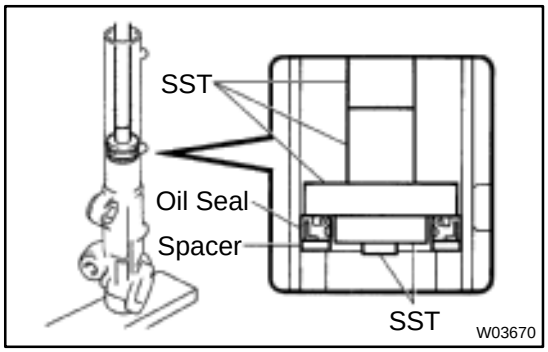

2. INSTALL SPACER AND OIL SEAL

(a) Coat a new oil seal lip with power steering fluid.

(b) Using SST, press in the oil seal and spacer.
SST 09951–60010 (09951–00330, 09951–00490, 09952–06010), 09951–70010 (09951–07360)

NOTICE:

- **Make sure to install the oil seal facing the correct direction.**
- **Take care that the oil seal does not get reversed as you install it.**

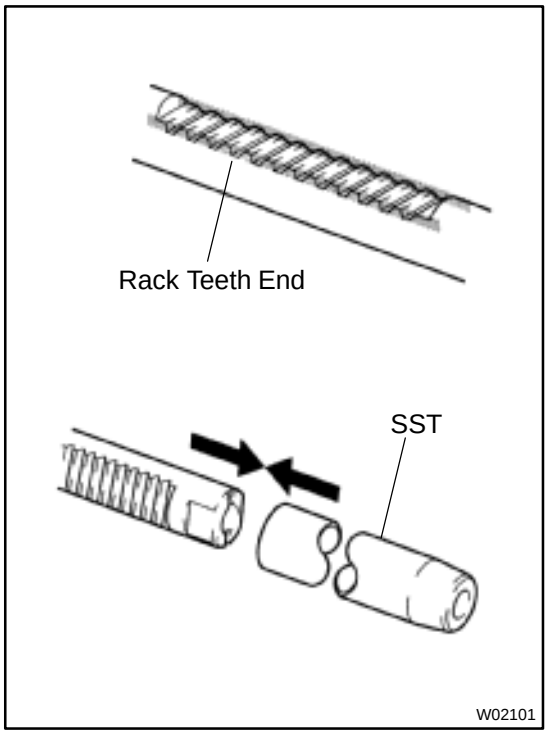

3. INSTALL STEERING RACK

(a) Install SST to the rack.
SST 09631–00350

HINT:

If necessary, scrape the burrs off the rack teeth end and burnish.

(b) Coat SST with power steering fluid.

(c) Install the rack into the rack housing.

(d) Remove the SST.

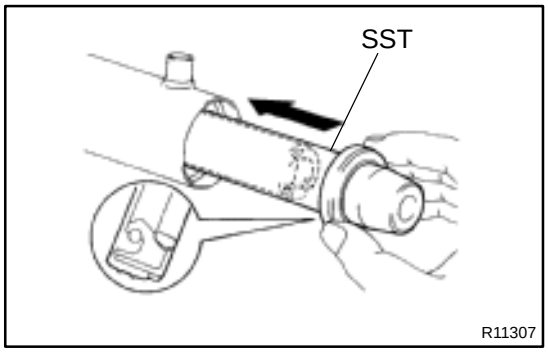

4. INSTALL OIL SEAL

(a) Install SST to the steering rack opposite end.
SST 09631–00350

(b) Coat SST with power steering fluid.

(c) Coat a new oil seal lip with power steering fluid, and install it by pushing it onto the SST without tilting.

NOTICE:

Make sure to install the oil seal facing the correct direction.

(d) Remove the SST.

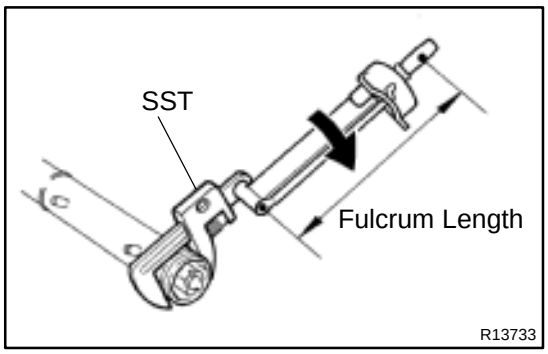

5. INSTALL CYLINDER END STOPPER

(a) Coat a new O–ring with power steering fluid, and install it to the stopper.

(b) Using SST, torque the stopper.
SST 09922–10010
Torque: 59 N·m (597 kgf·cm, 43 ft·lbf)

NOTICE:
Use SST 09922–10010 in the direction shown in the illustration.

HINT:
Use a torque wrench with a fulcrum length of 345 mm (13.58 in.).

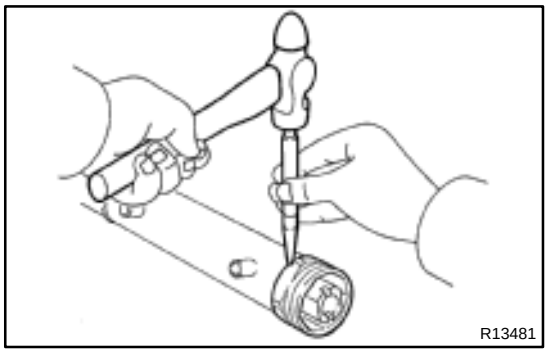

(c) Using a punch and hammer, stake the rack housing.

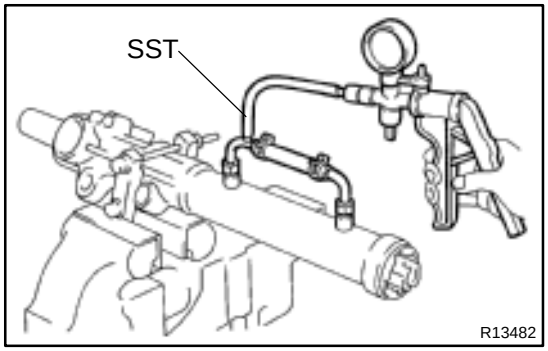

6. AIR TIGHTNESS TEST

(a) Install SST to the unions of the rack housing.
SST 09631–12071

(b) Apply 53 kPa (400 mmHg, 15.75 in.Hg) of vacuum for about 30 seconds.

(c) Check that there is no change in the vacuum.

If there is change in the vacuum, check the installation of the oil seals.

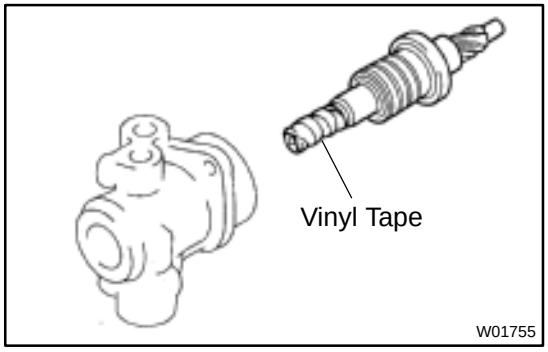

7. INSTALL CONTROL VALVE ASSEMBLY

(a) Coat the teflon rings with power steering fluid.

(b) To prevent oil seal lip damage, wind vinyl tape on the serrated part of the control valve shaft.

(c) Push the valve assembly into the control valve housing.

NOTICE:
Be careful not to damage the teflon rings and oil seal lip.

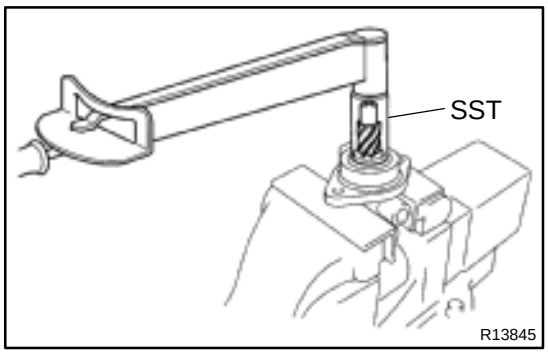

(d) Coat a new O–ring with power steering fluid, and install it to the bearing guide nut.
(e) Using SST, torque the nut.
SST 09631–20060
Torque: 25 N·m (250 kgf·cm, 18 ft·lbf)

NOTICE:
Be careful not to damage the oil seal lip.

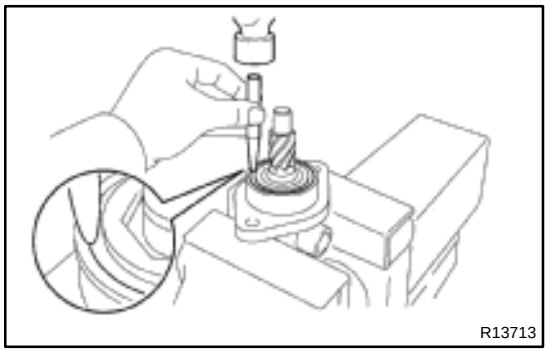

(f) Using a punch, stake the nut.

8. INSTALL CONTROL VALVE HOUSING WITH CONTROL VALVE ASSEMBLY

(a) Coat a new O–ring with power steering fluid, and install it to the valve housing.
(b) Align the matchmarks on the valve housing and rack housing, and install the valve housing with the valve assembly to the rack housing.
(c) Torque the 2 bolts.
Torque: 18 N·m (185 kgf·cm, 13 ft·lbf)

9. INSTALL DUST COVER

10. INSTALL RACK GUIDE, RACK GUIDE SPRING AND RACK GUIDE SPRING CAP

(a) Apply sealant to 2 or 3 threads of the cap.
Sealant:
Part No. 08833–00080, THREE BOND 1344, LOCTITE 242 or equivalent
(b) Temporarily install the cap.

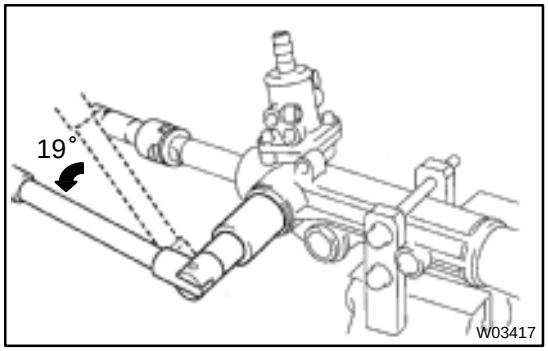

11. ADJUST TOTAL PRELOAD

(a) To prevent the steering rack teeth from damaging the oil seal lip, temporarily install the RH and LH rack ends.
(b) Torque the rack guide spring cap.
Torque: 25 N·m (250 kgf·cm, 18 ft·lbf)
(c) Return the cap 19°.

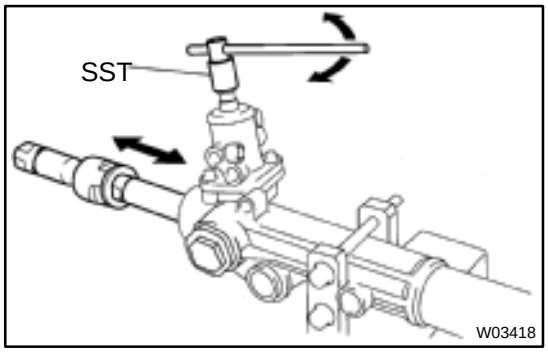

(d) Using SST, turn the control valve shaft right and left 1 or 2 times.
SST 09616–00010
(e) Loosen the cap until the rack guide spring is not functioning.

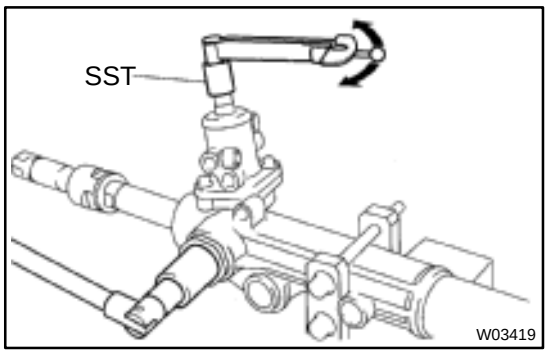

(f) Using SST and a torque wrench, tighten the cap until the preload is within specification.
SST 09616–00010
Preload (turning):
0.5 – 1.7 N·m (4.7 – 17.2 kgf·cm, 4.1 – 14.9 in.·lbf)

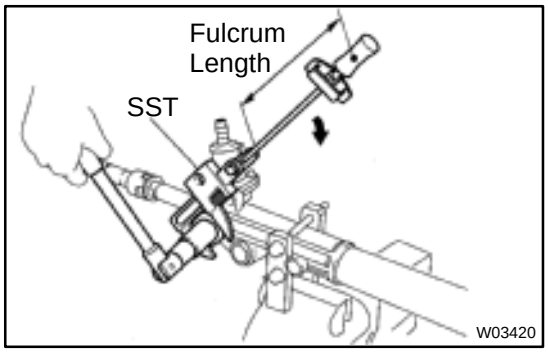

12. INSTALL RACK GUIDE SPRING CAP LOCK NUT

(a) Apply sealant to 2 or 3 threads of the nut.
Sealant:
Part No.08833–00080, THREE BOND 1344,
LOCTITE 242 or equivalent

(b) Holding the rack guide spring cap rotating, and using SST, torque the nut.
SST 09922–10010
Torque: 51 N·m (521 kgf·cm, 38 ft·lbf)

NOTICE:
Use SST 09922–10010 in the direction shown in the illustration.

HINT:
Use a torque wrench with a fulcrum length of 345 mm (13.58 in.).

(c) Recheck the total preload.
Preload (turning):
0.5 – 1.7 N·m (4.7 – 17.2 kgf·cm, 4.1 – 14.9 in.·lbf)

(d) Remove the RH and LH rack ends.

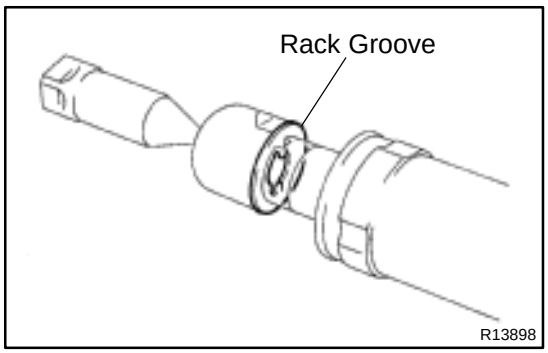

13. INSTALL RH AND LH CLAW WASHERS AND RACK ENDS

(a) Install a new washer, and temporarily tighten the rack end.

HINT:
Align the claws of the washer with the steering rack grooves.

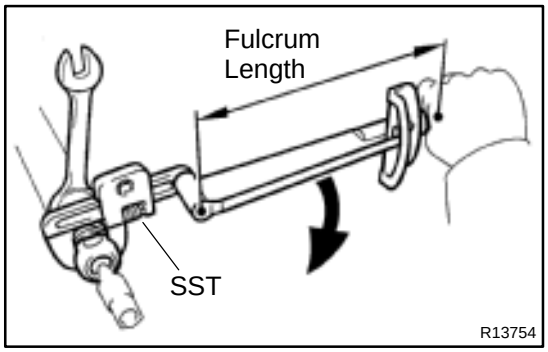

(b) Using a spanner to hold the steering rack steady, and using SST, torque the rack end.
SST 09922–10010
Torque: 76 N·m (770 kgf·cm, 56 ft·lbf)

NOTICE:
Use SST 09922–10010 in the direction shown in the illustration.

HINT:
Use a torque wrench with a fulcrum length of 345 mm (13.58 in.).

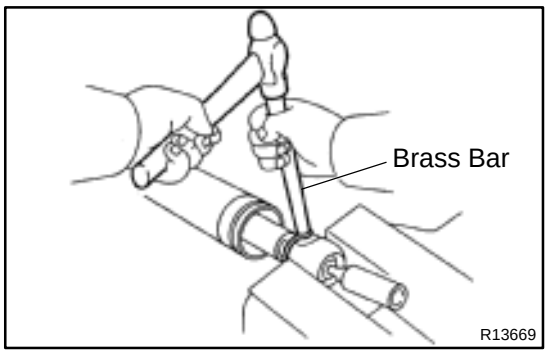

(c) Using a brass bar and hammer, stake the washer.

NOTICE:

Avoid any impact to the rack.

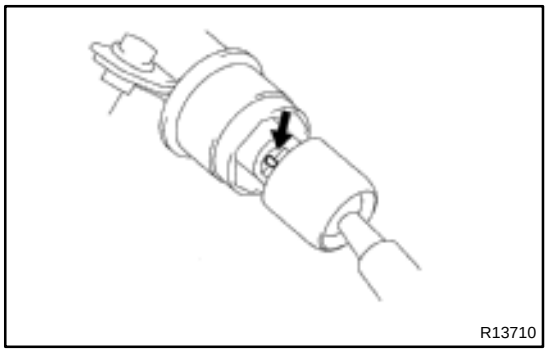

14. INSTALL RH AND LH RACK BOOTS, CLAMPS AND CLIPS

(a) Ensure that the tube hole is not clogged with grease.

HINT:

If the tube hole is clogged, the pressure inside the boot will change after it is assembled and the steering wheel is turned.

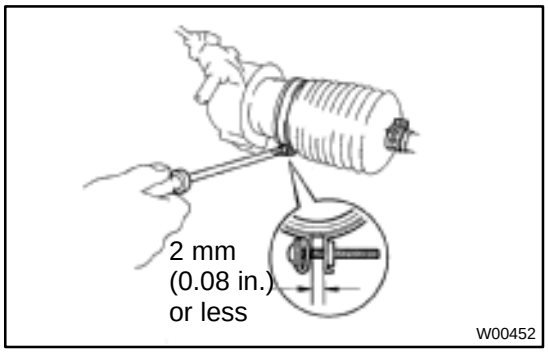

(b) Install the boot.

NOTICE:

Be careful not to damage or twist the boot.

(c) Tighten a new clamp, as shown in the illustration.

15. INSTALL RH AND LH TIE ROD ENDS AND LOCK NUTS

(a) Screw the lock nut and tie rod end onto the rack end until the matchmarks are aligned.

(b) After adjusting toe–in, torque the nut.
(See page SA–9)
Torque: 55 N·m (560 kgf·cm, 41 ft·lbf)

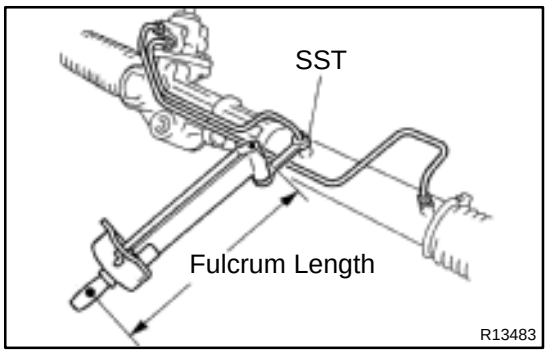

16. INSTALL 2 TURN PRESSURE TUBES

(a) Install a new union seat to the rack housing.

(b) Install a new union seat to the control valve housing.

(c) Using SST, install the tube.
SST 09633–00020
Torque: 20 N·m (203 kgf·cm, 15 ft·lbf)

HINT:

- Use a torque wrench with a fulcrum length of 300 mm (11.81 in.).
- This torque value is effective in case that SST is parallel to a torque wrench.

SR05G–03

REMOVAL

NOTICE:

Remove the steering wheel assembly before the steering gear removal, because there is possibility of breaking of the spiral cable.

1. PLACE FRONT WHEELS FACING STRAIGHT AHEAD

2. REMOVE STEERING WHEEL PAD
(See page SR–13)

3. REMOVE STEERING WHEEL
(See page SR–13)

4. REMOVE ENGINE UNDER COVER

Remove the 4 bolts.

5. DISCONNECT RH AND LH TIE ROD ENDS
(See page SA–121)

6. DISCONNECT INTERMEDIATE NO. 2 SHAFT
(See page SR–13)

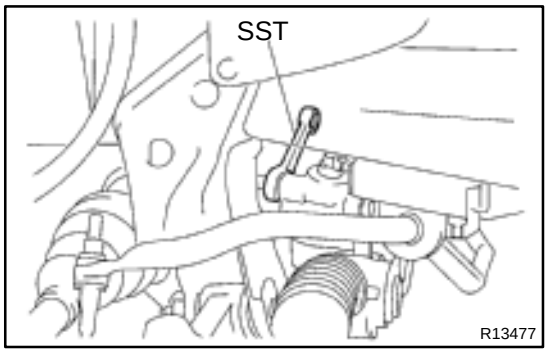

7. DISCONNECT PRESSURE FEED AND RETURN TUBES

Using SST, disconnect the tube.

SST 09631–22020

8. REMOVE PS GEAR ASSEMBLY

(a) Remove the bolt and nut from the bracket.

(b) Remove the 2 set bolts and nut.

9. REMOVE BRACKET AND GROMMET

POWER STEERING VANE PUMP (5VZ–FE)

SR04X–01

COMPONENTS

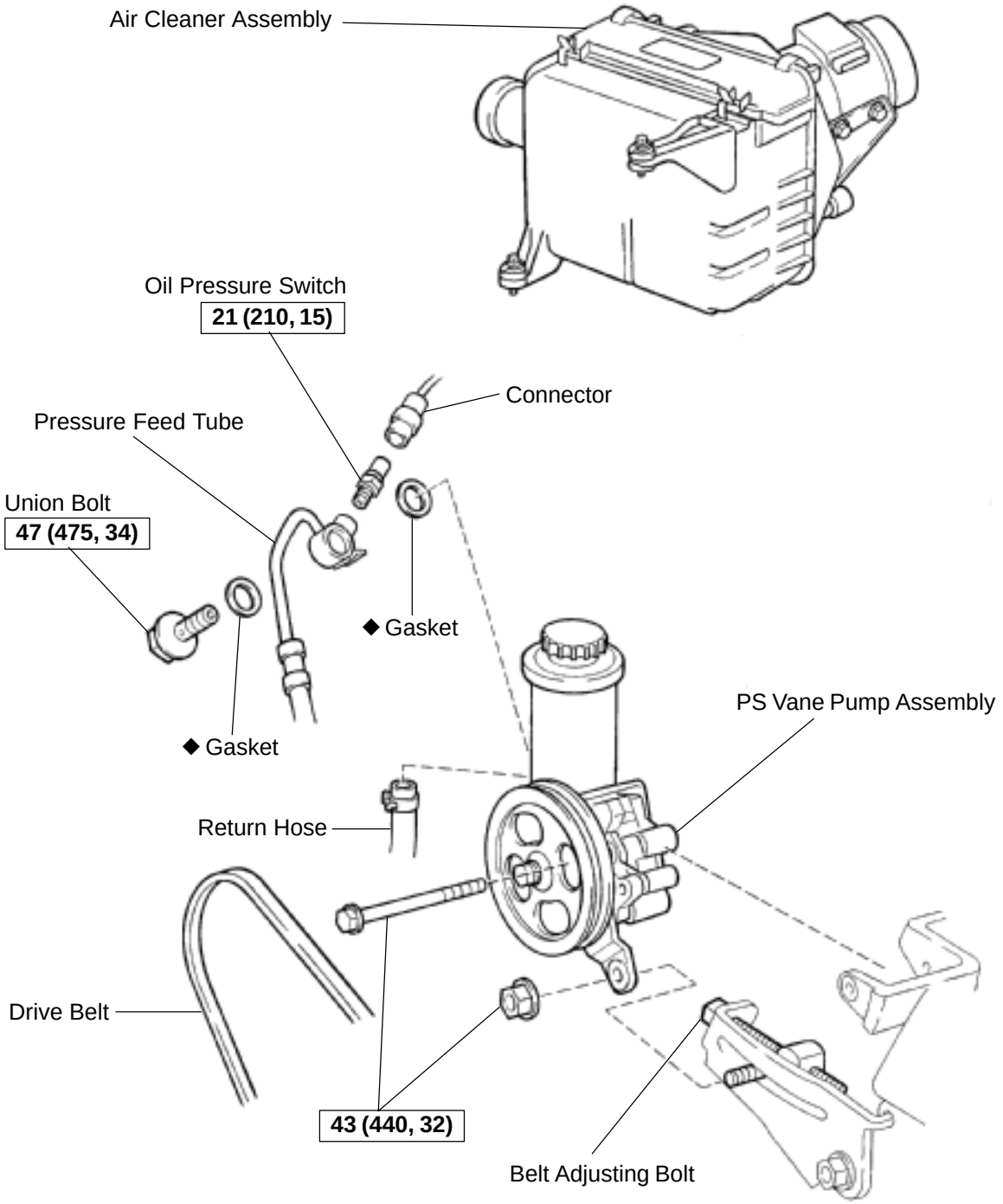

N·m (kgf·cm, ft·lbf) : Specified torque

◆ Non–reusable part

F01853

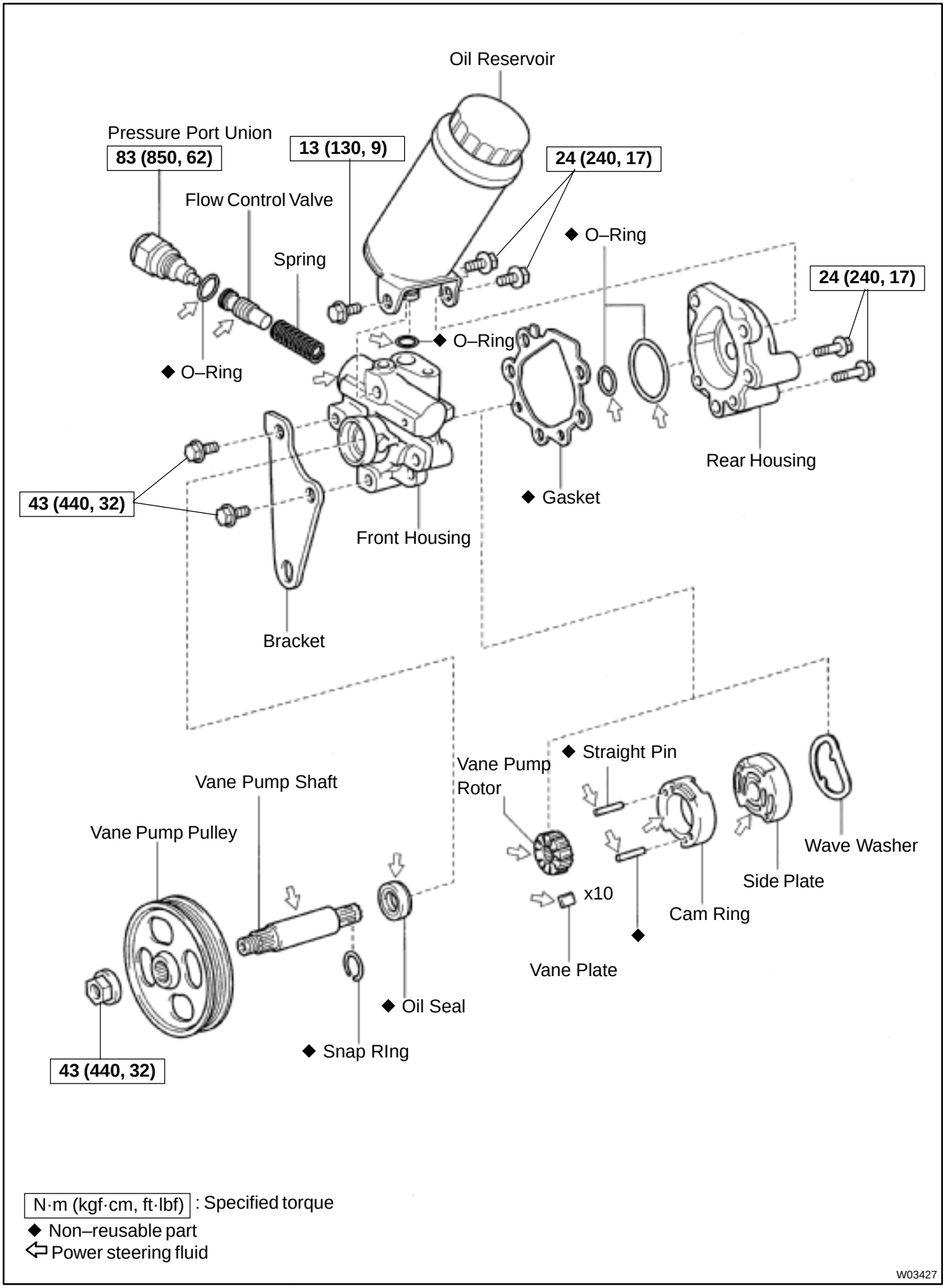
Oil Reservoir
Pressure Port Union
83 (850, 62)
13 (130, 9)
24 (240, 17)
Flow Control Valve
Spring
◆ O–Ring
◆ O–Ring
◆ O–Ring
24 (240, 17)
Rear Housing
◆ Gasket
43 (440, 32)
Front Housing
Bracket
Vane Pump Shaft
Vane Pump Pulley
Vane Pump Rotor
◆ Straight Pin
x10
Cam Ring
Side Plate
Wave Washer
Vane Plate
◆ Oil Seal
◆ Snap RIng
43 (440, 32)
N·m (kgf·cm, ft·lbf) : Specified torque
◆ Non–reusable part
⇦ Power steering fluid
W03427

SR04Z–01

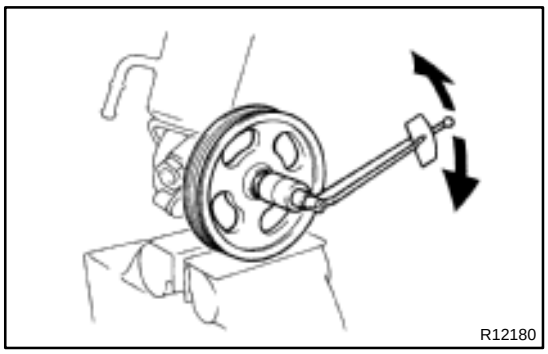

DISASSEMBLY

NOTICE:

When using a vise, do not overtighten it.

1. MEASURE PS VANE PUMP ROTATING TORQUE

(a) Check that the pump rotates smoothly without abnormal noise.

(b) Using a torque wrench, check the pump rotating torque.
Rotating torque:
0.27 N·m (2.8 kgf·cm, 2.4 in.·lbf) or less

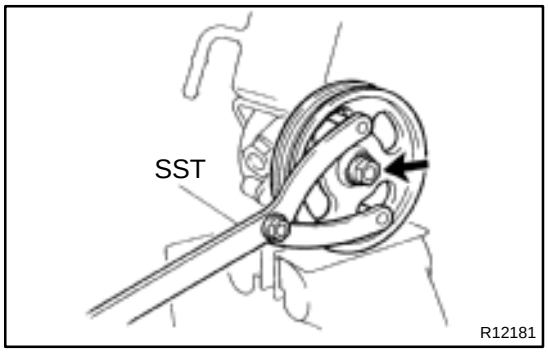

2. REMOVE VANE PUMP PULLEY

Using SST to stop the pulley rotating, remove the pulley set nut.
SST 09960–10010 (09962–01000, 09963–01000)

3. REMOVE OIL RESERVOIR

(a) Remove the 3 bolts and oil reservoir.

(b) Remove the O–ring from the oil reservoir.

4. REMOVE PRESSURE PORT UNION, FLOW CONTROL VALVE AND SPRING

Remove the O–ring from the union.

5. REMOVE BRACKET

Remove the 2 bolts.

6. REMOVE REAR HOUSING

(a) Remove the 2 bolts.

(b) Remove the 2 O–rings from the housing.

7. REMOVE WAVE WASHER

8. REMOVE SIDE PLATE

9. REMOVE GASKET

10. REMOVE CAM RING, VANE PLATES AND VANE PUMP ROTOR

(a) Remove the 10 plates.

NOTICE:

Take care not to drop the plate.

(b) Using a screwdriver, remove the snap ring from the vane pump shaft.

11. REMOVE VANE PUMP SHAFT

12. REMOVE STRAIGHT PINS

Remove the 2 pins from the front housing.

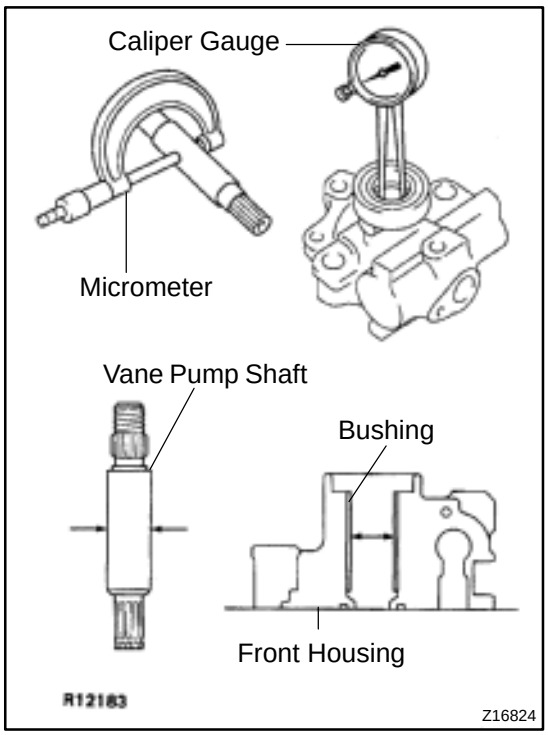

INSPECTION

NOTICE:

When using a vise, do not overtighten it.

1. CHECK OIL CLEARANCE BETWEEN VANE PUMP SHAFT AND BUSHING

Using a micrometer and caliper gauge, measure the oil clearance.

Standard clearance:
0.03 – 0.05 mm (0.0012 – 0.0020 in.)
Maximum clearance: 0.07 mm (0.0028 in.)

If it is more than the maximum, replace the front housing and vane pump shaft.

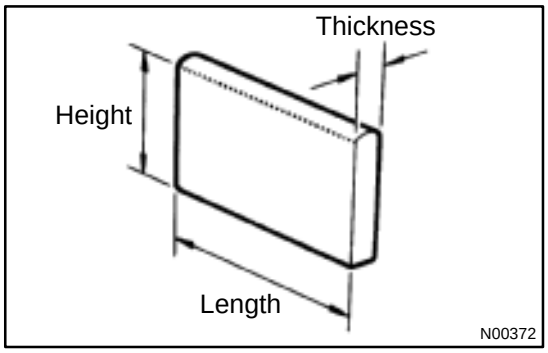

2. INSPECT VANE PUMP ROTOR AND VANE PLATES

(a) Using a micrometer, measure the height, thickness and length of the 10 plates.

Minimum height: 8.6 mm (0.339 in.)
Minimum thickness: 1.397 mm (0.0550 in.)
Minimum length: 14.991 mm (0.5902 in.)

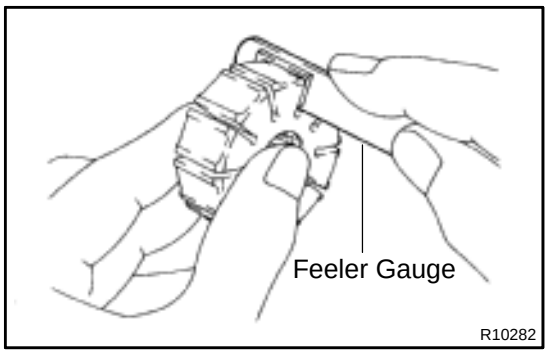

(b) Using a feeler gauge, measure the clearance between the rotor groove and plate.

Maximum clearance: 0.035 mm (0.0014 in.)

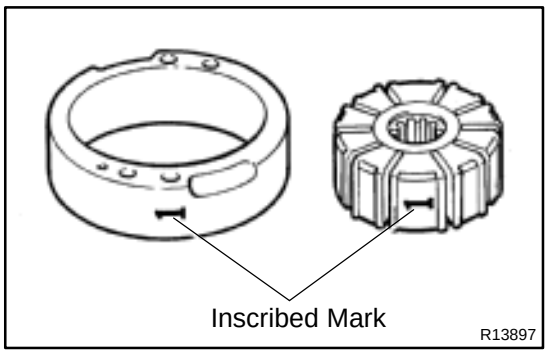

If it is more than the maximum, replace the plate and/or rotor with one having the same mark stamped on the cam ring.

Inscribed mark: 1, 2, 3, 4 or None

HINT:

There are 5 vane plate lengths with the following rotor and cam ring marks:

Rotor and cam ring mark	Vane plate part number	Vane plate length mm (in.)
None	44345–26010	14.999–15.001 (0.59051–0.59059)
1	44345–26020	14.997–14.999 (0.59043–0.59051)
2	44345–26030	14.995–14.997 (0.59035–0.59043)
3	44345–26040	14.993–14.995 (0.59027–0.59035)
4	44345–26050	14.991–14.993 (0.59020–0.59027)

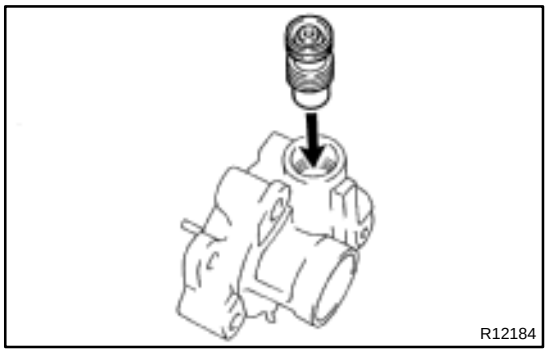

3. INSPECT FLOW CONTROL VALVE

(a) Coat the valve with power steering fluid and check that it falls smoothly into the valve hole by its own weight.

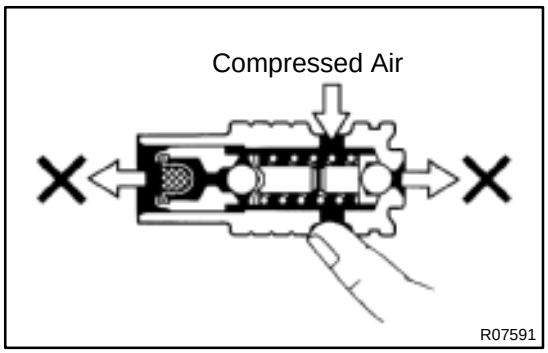

(b) Check the flow control valve for leakage.
Close one of the holes and apply compressed air 392–490 kPa (4–5 kgf/cm^2, 57–71 psi) into the opposite side, and confirm that air does not come out from the end holes.

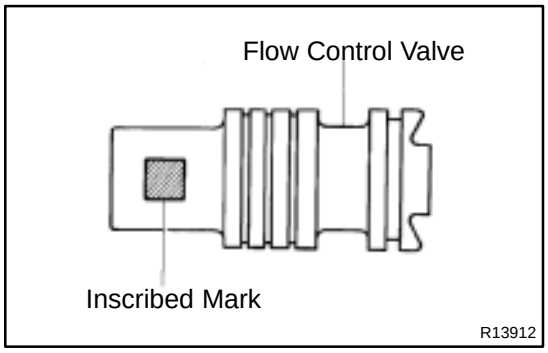

If necessary, replace the valve.

NOTICE:

Install a new valve with the same inscribed mark as the old one.

Inscribed mark: A, B, C, D, E or F

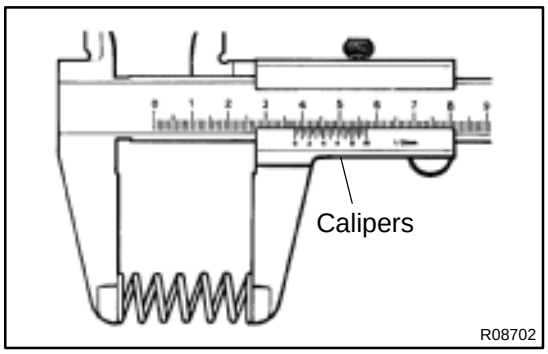

4. INSPECT SPRING

Using calipers, measure the free length of the spring.

Minimum free length: 33.2 mm (1.307 in.)

If it is not within specification, replace the spring.

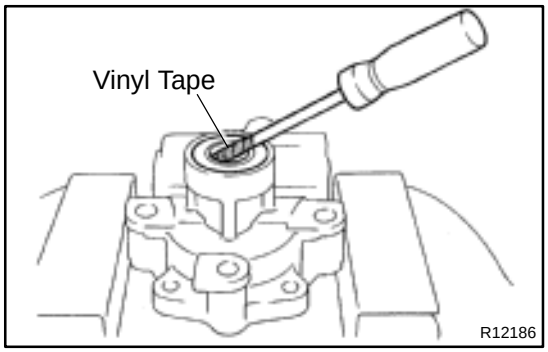

5. IF NECESSARY, REPLACE OIL SEAL

(a) Using a screwdriver with vinyl tape wound around its tip, remove the oil seal.

NOTICE:

Be careful not to damage the bushing of the front housing.

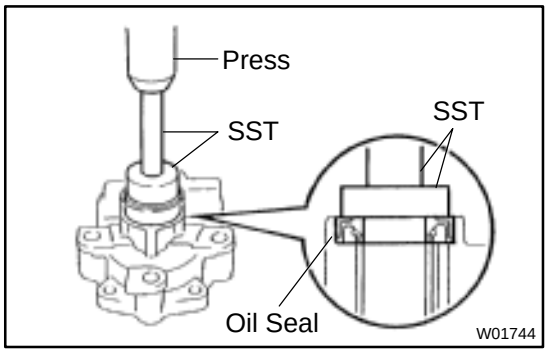

(b) Coat a new oil seal lip with power steering fluid.

(c) Using SST, press in the oil seal.

SST 09950–60010 (09951–00330),
09950–70010 (09951–07100)

NOTICE:

Make sure to install the oil seal facing the correct direction.

SR052–01

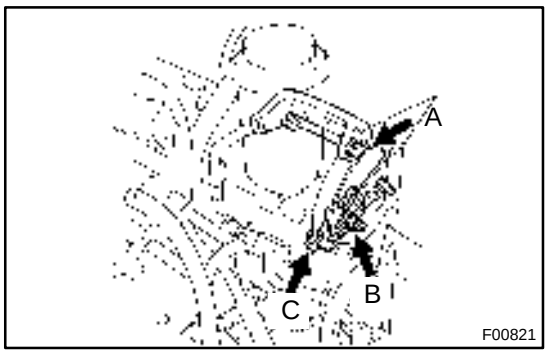

INSTALLATION

1. INSTALL PS VANE PUMP ASSEMBLY

Temporarily tighten the bolt A and nut B.

2. INSTALL DRIVE BELT

(a) Tightening the bolt C, adjust drive belt tension.
(See page SR–3)

(b) Torque the bolt A and nut B.
Torque: 43 N·m (440 kgf·cm, 32 ft·lbf)

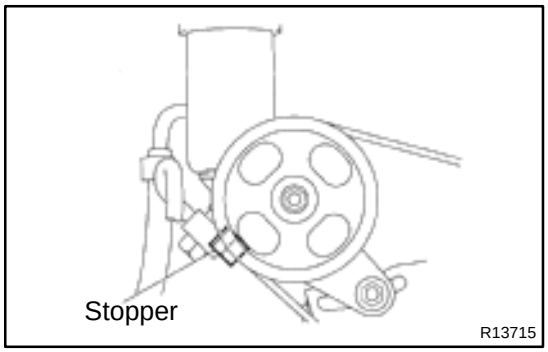

3. CONNECT PRESSURE FEED TUBE

(a) Torque the union bolt with a new gasket on each side of the tube.
Torque: 47 N·m (475 kgf·cm, 34 ft·lbf)

HINT:
Make sure the stopper of the tube is touching the PS pump body as shown, then torque the union bolt.

(b) Install the oil pressure switch to the pressure feed tube.
Torque: 21 N·m (210 kgf·cm, 15 ft·lbf)

(c) Connect the connector to the oil pressure switch.

4. CONNECT RETURN HOSE

5. INSTALL AIR CLEANER ASSEMBLY

Tighten the 3 bolts.

6. BLEED POWER STEERING SYSTEM
(See page SR–4)

SR051–01

REASSEMBLY

NOTICE:

When using a vise, do not overtighten it.

1. COAT WITH POWER STEERING FLUID

(See page SR–48)

2. INSTALL STRAIGHT PINS

Using a plastic hammer, tap in 2 new pins to the front housing.

NOTICE:

Be careful not to damage the pins.

3. INSTALL VANE PUMP SHAFT

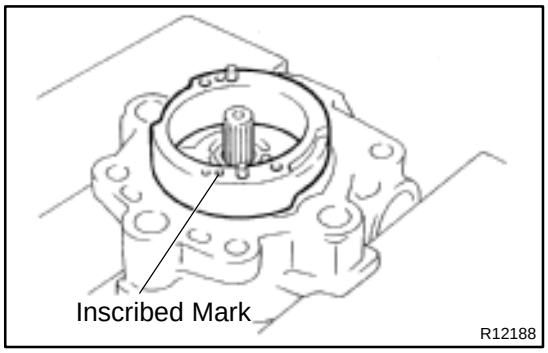

4. INSTALL CAM RING

Install the ring with the inscribed mark facing outward.

HINT:

Align the holes of the cam ring with the straight pins.

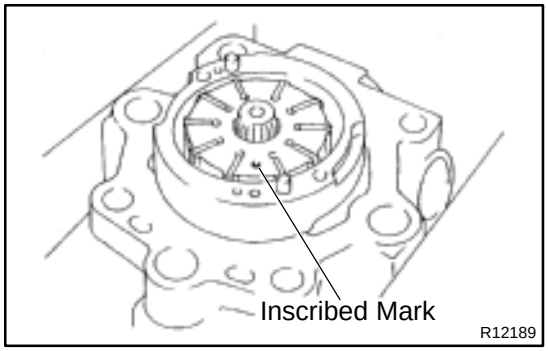

5. INSTALL VANE PUMP ROTOR

(a) Install the rotor with the inscribed mark facing outward.

(b) Install a new snap ring to the vane pump shaft.

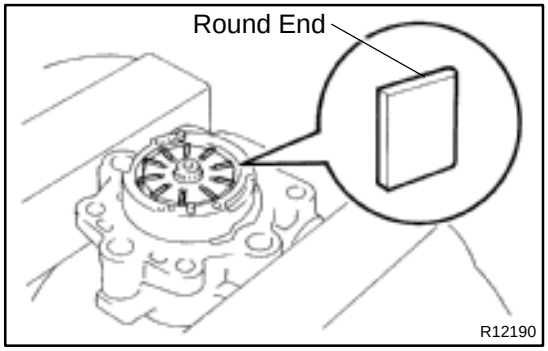

6. INSTALL VANE PLATES

Install the 10 plates with the round end facing outward.

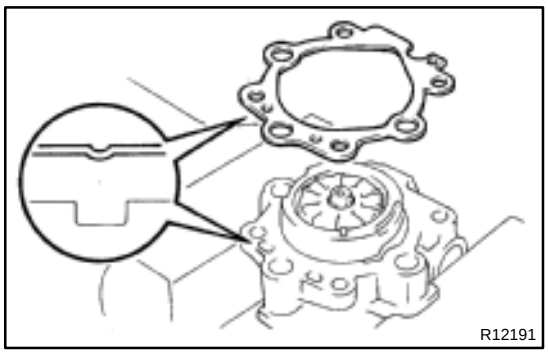

7. INSTALL GASKET

Install a new gasket on the front housing.

NOTICE:

Be careful the direction of the gasket.

8. INSTALL SIDE PLATE

Align the holes of the plate and 2 straight pins.

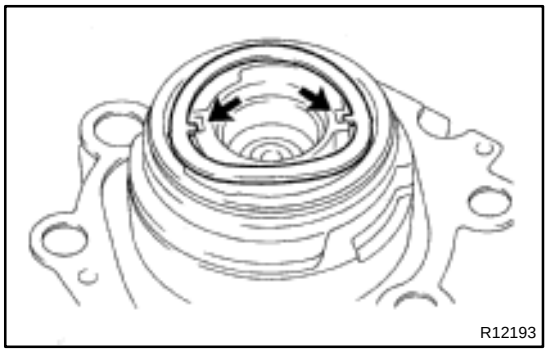

9. INSTALL WAVE WASHER

Install the washer so that its protrusions fit into the slots in the side plate.

10. INSTALL REAR HOUSING

(a) Coat 2 new O–rings with power steering fluid and install them to the housing.

(b) Torque the 2 bolts.

Torque: 24 N·m (240 kgf·cm, 17 ft·lbf)

11. INSTALL SPRING, FLOW CONTROL VALVE AND PRESSURE PORT UNION

(a) Install the valve facing the correct direction.
(See page SR–48)

(b) Coat a new O–ring with power steering fluid and install it to the union.

(c) Torque the union.

Torque: 83 N·m (850 kgf·cm, 62 ft·lbf)

12. INSTALL BRACKET

Torque the 2 bolts.

Torque: 43 N·m (440 kgf·cm, 32 ft·lbf)

13. INSTALL OIL RESERVOIR

(a) Coat a new O–ring with power steering fluid and install it to the oil reservoir.

(b) Install the oil reservoir with the 3 bolts.

Torque:

Front side bolt: 13 N·m (130 kgf·cm, 9 ft·lbf)

Rear side bolts: 24 N·m (240 kgf·cm, 17 ft·lbf)

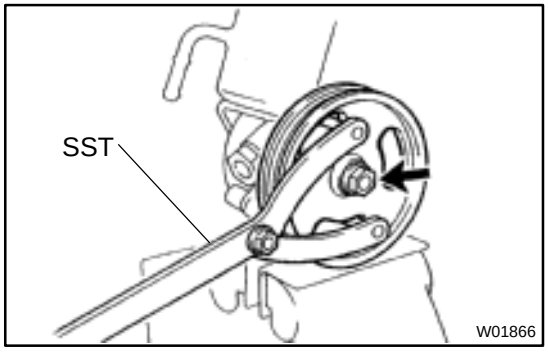

14. INSTALL VANE PUMP PULLEY

Using SST to stop the pulley rotating, torque the nut.

SST 09960–10010 (09962–01000, 09963–01000)

Torque: 43 N·m (440 kgf·cm, 32 ft·lbf)

15. MEASURE PS VANE PUMP ROTATING TORQUE

(See page SR–50)

SR04Y–01

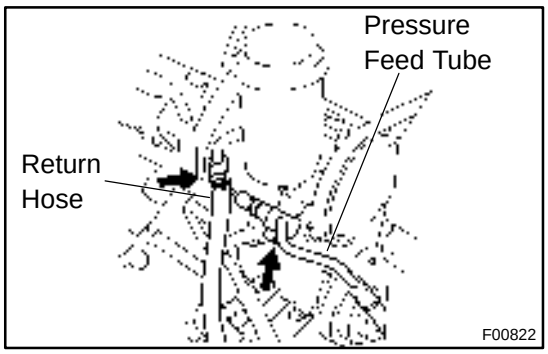

REMOVAL

1. REMOVE AIR CLEANER ASSEMBLY

Loosen the 3 bolts.

2. DISCONNECT RETURN HOSE

NOTICE:

Take care not to spill fluid on the drive belt.

3. DISCONNECT PRESSURE FEED TUBE

(a) Disconnect the connector from the oil pressure switch.

(b) Remove the oil pressure switch from the pressure feed tube.

(c) Remove the union bolt and 2 gaskets, and disconnect the tube from the PS vane pump assembly.

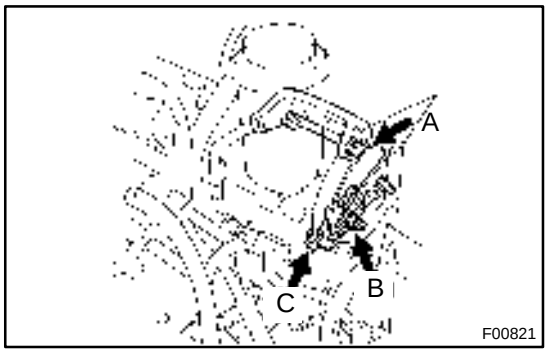

4. REMOVE DRIVE BELT

(a) Loosen the bolt A and nut B.

(b) Loosen the bolt C.

5. REMOVE PS VANE PUMP ASSEMBLY

Remove the bolt A and nut B.

STEERING SYSTEM

SR042–01

PRECAUTION

- **Care must be taken to replace parts properly because they could affect the performance of the steering system and result in a driving hazard.**
- **The TOYOTA TACOMA is equipped with an SRS (Supplemental Restraint System) such as the driver airbag and front passenger airbag. Failure to carry out service operation in the correct sequence could cause the SRS to unexpectedly deploy during servicing, possibly leading to a serious accident. Before servicing (including removal or installation of parts, inspection or replacement), be sure to read the precautionary notices in the RS section.**

TILT STEERING COLUMN (NASTECH Made)

SR04L–02

COMPONENTS

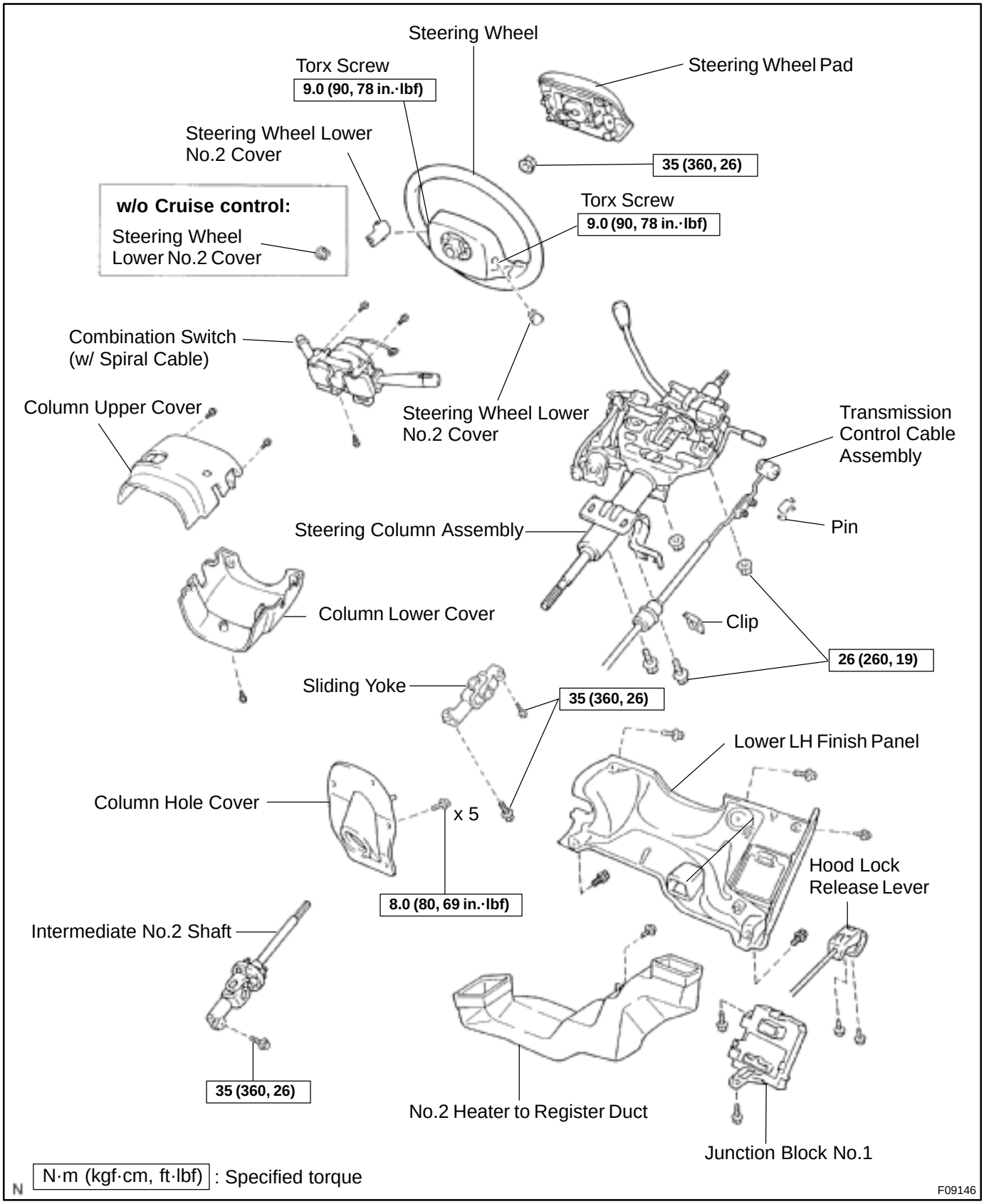

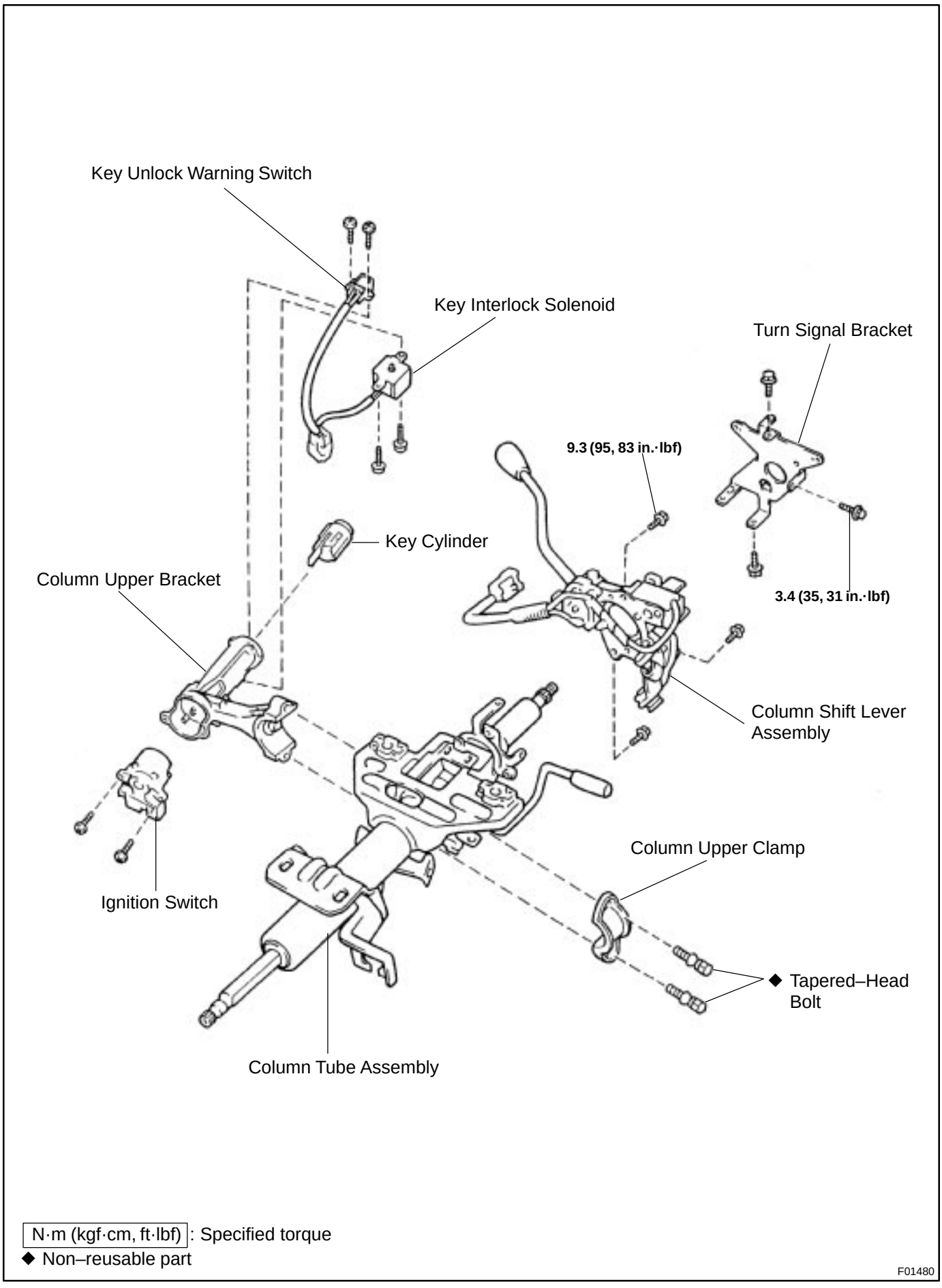
Key Unlock Warning Switch
Key Interlock Solenoid
Turn Signal Bracket
9.3 (95, 83 in.·lbf)
Key Cylinder
Column Upper Bracket
3.4 (35, 31 in.·lbf)
Column Shift Lever Assembly
Column Upper Clamp
Ignition Switch
◆ Tapered–Head Bolt
Column Tube Assembly
N·m (kgf·cm, ft·lbf): Specified torque
◆ Non–reusable part
F01480

SR04N–02

DISASSEMBLY

NOTICE:

- **Do not disassemble the column tube assembly.**
- **When using a vise, do not overtighten it.**

1. REMOVE COLUMN UPPER BRACKET AND COLUMN UPPER CLAMP (See page SR–16)

2. REMOVE TURN SIGNAL BRACKET

Remove the 3 bolts and turn signal bracket.

3. REMOVE COLUMN SHIFT LEVER ASSEMBLY

Remove the 3 bolts and column shift lever assembly.

SR04O–01

INSPECTION

(See page SR–17)

SR04Q–01

INSTALLATION

(See page SR–20)

SR04P–02

REASSEMBLY

NOTICE:

When using a vise, do not overtighten it.

1. INSTALL COLUMN SHIFT LEVER ASSEMBLY

Install the column shift lever assembly with the 3 bolts.

Torque: 9.3 N·m (95 kgf·cm, 83 in.·lbf)

2. INSTALL TURN SIGNAL BRACKET

Install the turn signal bracket with the 3 bolts.

Torque: 3.4 N·m (35 kgf·cm, 31 in.·lbf)

3. INSTALL COLUMN UPPER BRACKET AND COLUMN UPPER CLAMP (See page SR–19)

SR04M–01

REMOVAL

(See page SR–13)

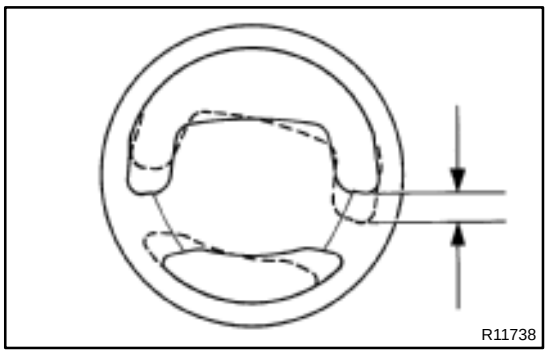
R11738

STEERING WHEEL

SR048–01

INSPECTION

1. CHECK STEERING WHEEL FREEPLAY

With the vehicle stopped and tires facing straight ahead, rock the steering wheel gently back and forth with light finger pressure.

Freeplay should not exceed the maximum.

Maximum freeplay: 30 mm (1.18 in.)

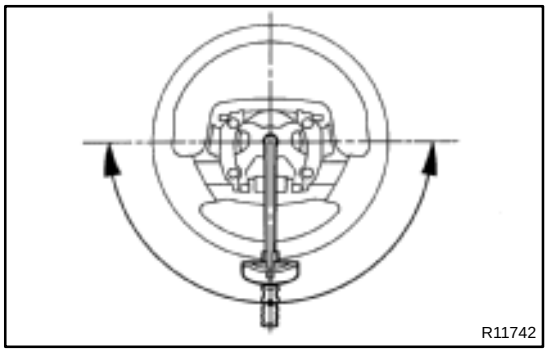
R11742

2. CHECK STEERING EFFORT

(a) Center the steering wheel.

(b) Remove the steering wheel pad.
(See page SR–13)

(c) Start the engine and run it at idle.

(d) Measure the steering effort in both directions.

Reference: 4.9 N·m (50 kgf·cm, 43 in.·lbf)

HINT:

Be sure to consider the tire type, pressure and contact surface before making your diagnosis.

(e) Torque the steering wheel set nut.

Torque: 35 N·m (360 kgf·cm, 26 ft·lbf)

(f) Install the steering wheel pad.
(See page SR–20)

TILT STEERING COLUMN (TMC Made)

SR04F–03

COMPONENTS

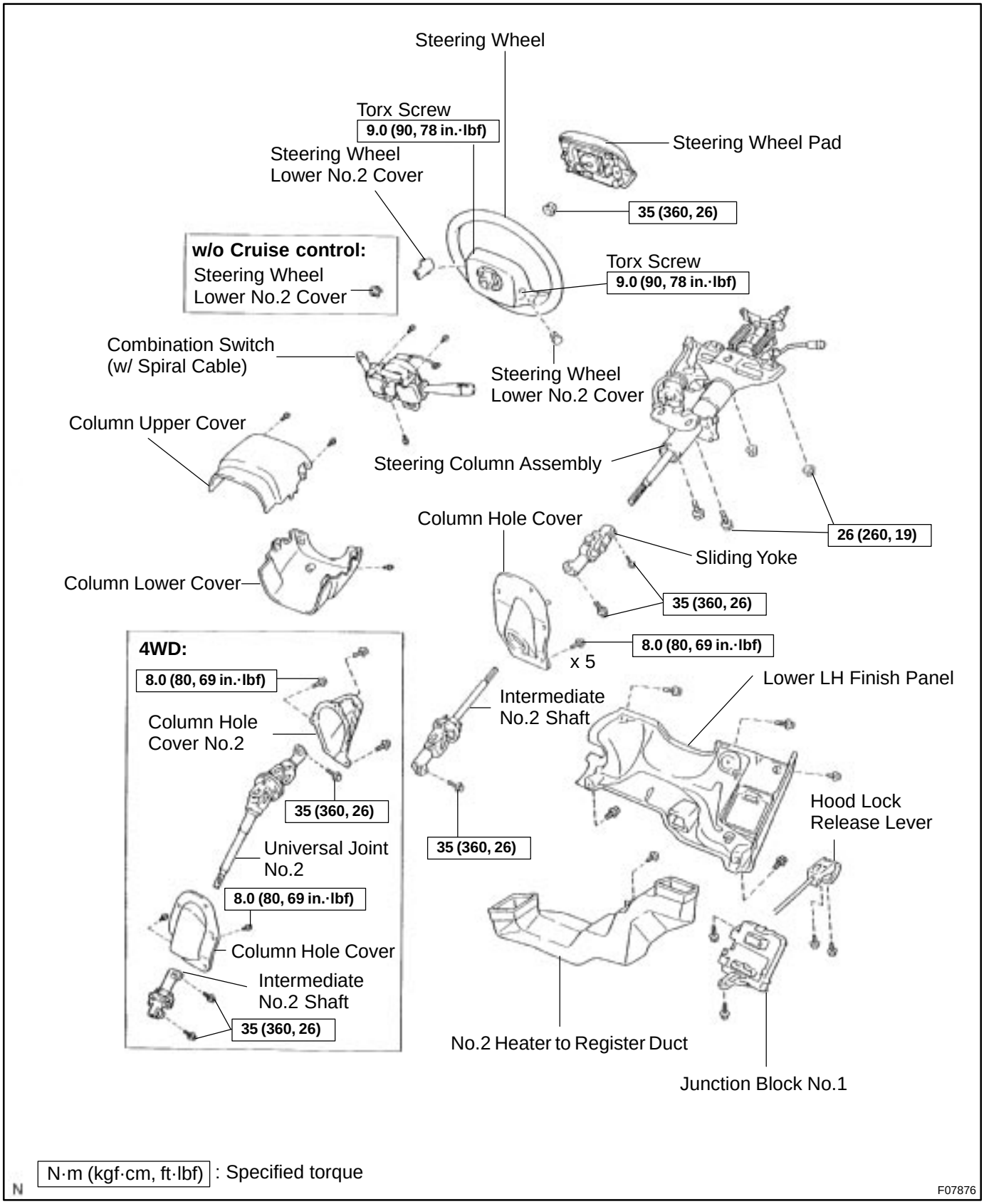

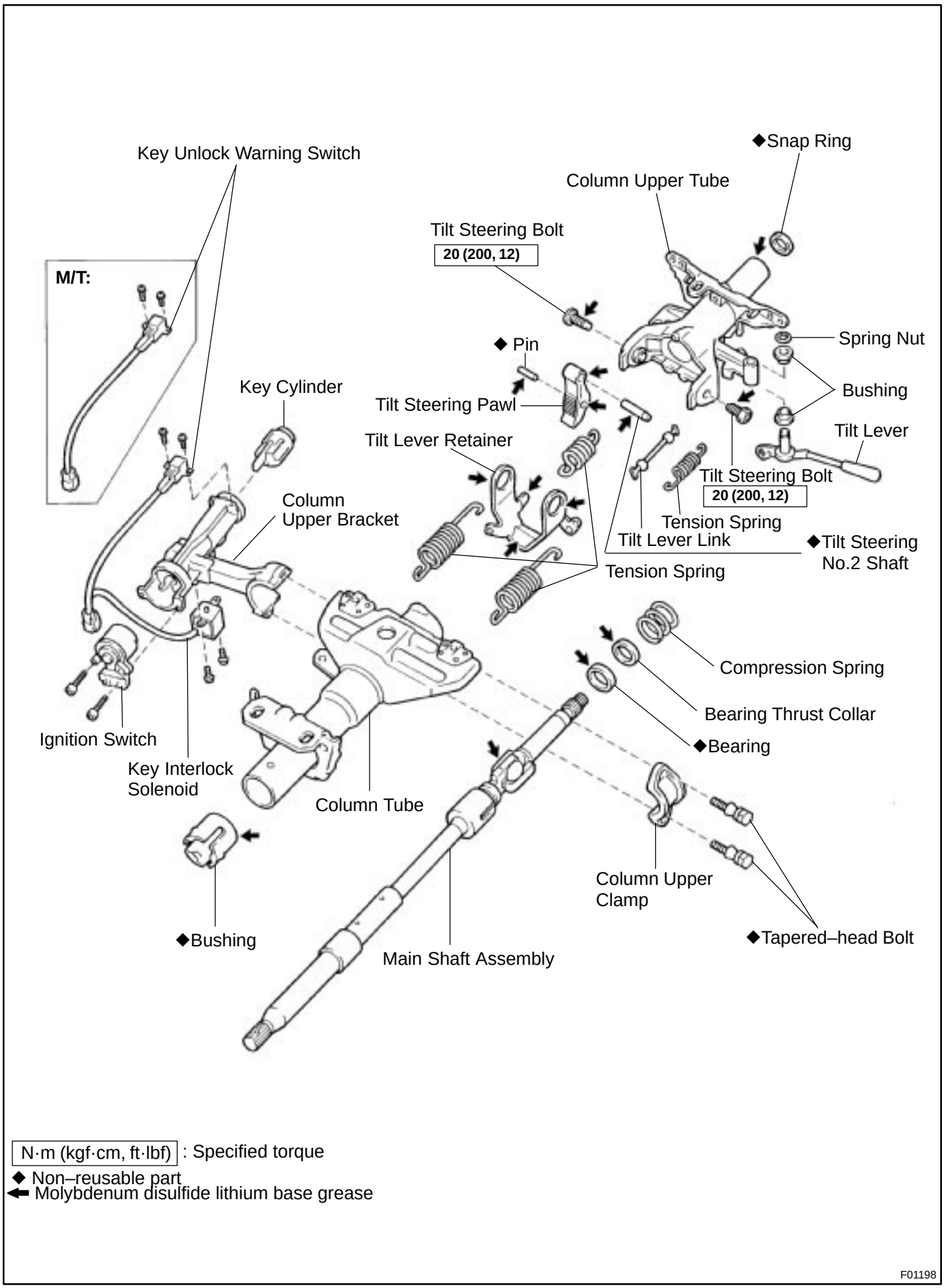
Key Unlock Warning Switch
◆Snap Ring
Column Upper Tube
Tilt Steering Bolt
20 (200, 12)
M/T:
◆ Pin
Spring Nut
Bushing
Key Cylinder
Tilt Steering Pawl
Tilt Lever
Tilt Lever Retainer
Tilt Steering Bolt
20 (200, 12)
Column
Upper Bracket
Tension Spring
Tilt Lever Link
◆Tilt Steering
No.2 Shaft
Tension Spring
Compression Spring
Bearing Thrust Collar
◆Bearing
Ignition Switch
Key Interlock
Solenoid
Column Tube
Column Upper
Clamp
◆Bushing
◆Tapered–head Bolt
Main Shaft Assembly
N·m (kgf·cm, ft·lbf) : Specified torque
◆ Non–reusable part
Molybdenum disulfide lithium base grease
F01198

SR04H–03

DISASSEMBLY

NOTICE:

When using a vise, do not overtighten it.

1. REMOVE COLUMN UPPER BRACKET AND COLUMN UPPER CLAMP (See page SR–16)

2. REMOVE 4 TENSION SPRINGS

HINT:

Remove the springs with the tilt function at maximum tilt up.

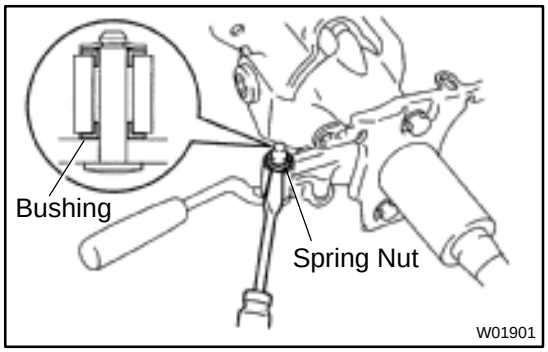

3. REMOVE TILT LEVER

(a) Using a screwdriver, remove the spring nut.

(b) Remove the tilt lever.

(c) Remove the 2 bushings from the column upper tube.

4. REMOVE TILT LEVER LINK

5. REMOVE COLUMN UPPER TUBE WITH MAIN SHAFT ASSEMBLY

(a) Using a hexagon wrench, remove the 2 tilt steering bolts.

(b) Remove the column upper tube with the main shaft from the column tube.

6. REMOVE TILT LEVER RETAINER

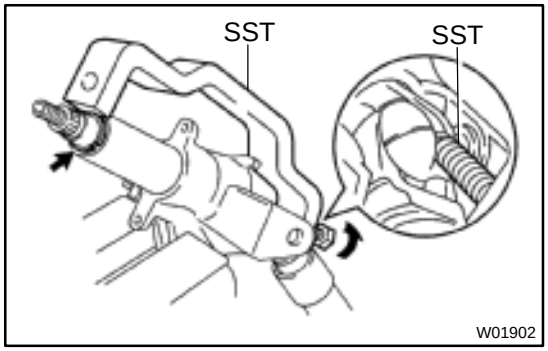

7. REMOVE MAIN SHAFT ASSEMBLY

(a) Using SST, compress the compression spring.

SST 09950–40011 (09958–04011)

NOTICE:

Do not bend the universal joint of the shaft more than 20°.

(b) Using a snap ring expander, remove the snap ring from the shaft.

(c) Remove the main shaft from the column upper tube.

(d) Remove the compression spring and bearing thrust collar from the shaft.

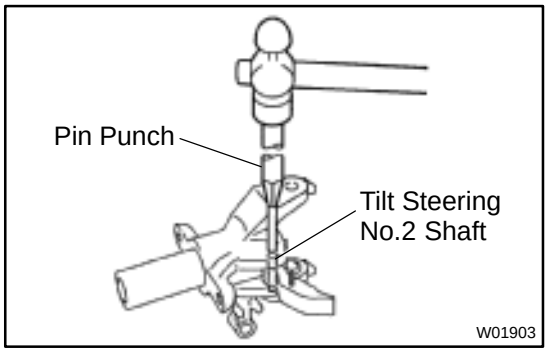

8. REMOVE TILT STEERING PAWL

Using a pin punch and hammer, tap out the tilt steering No.2 shaft and remove the tilt steering pawl.

SR04I–01

INSPECTION

(See page SR–17)

SR04K–01

INSTALLATION

(See page SR–20)

SR04J–03

REASSEMBLY

NOTICE:

When using a vise, do not overtighten it.

1. COAT PARTS INDICATED BY ARROWS WITH MOLYBDENUM DISULFIDE LITHIUM BASE GREASE (See page SR–23)

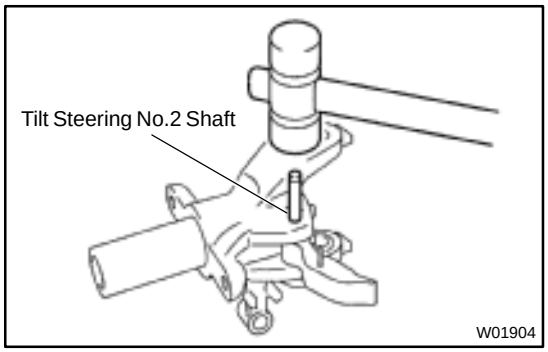

2. INSTALL TILT STEERING PAWL

Using a plastic hammer, tap in a new tilt steering No.2 shaft and install the pawl.

NOTICE:

Tap the shaft completely into the steering column upper tube.

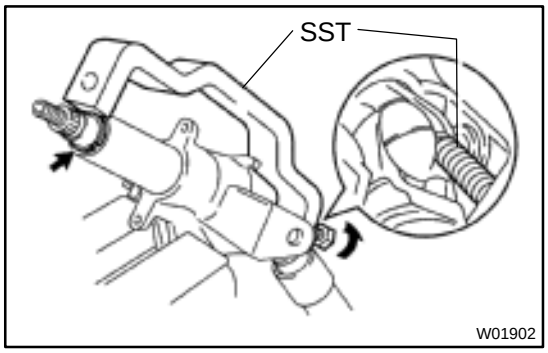

3. INSTALL MAIN SHAFT ASSEMBLY

(a) Install the bearing thrust collar and compression spring to the shaft.

(b) Install the shaft to the column upper tube.

(c) Using SST, compress the compression spring.
SST 09950–40011 (09958–04011)

NOTICE:

Do not bend the universal joint of the shaft more than 20˚.

(d) Using a snap ring expander, install a new snap ring to the shaft.

4. INSTALL TILT LEVER RETAINER

5. INSTALL COLUMN UPPER TUBE WITH MAIN SHAFT ASSEMBLY

(a) Install the upper tube with the shaft to the column tube.

(b) Using a hexagon wrench, torque the 2 tilt steering bolts.
Torque: 20 N·m (200 kgf·cm, 14 ft·lbf)

(c) Check that the upper tube turns smoothly.

6. INSTALL TILT LEVER LINK

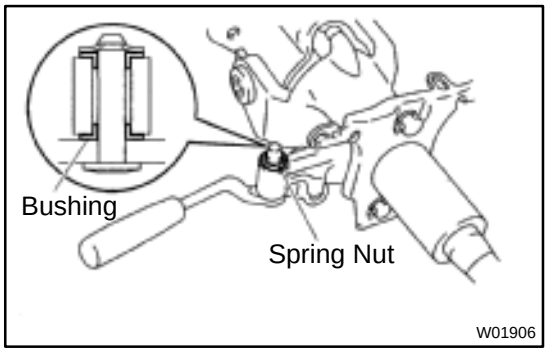

7. INSTALL TILT LEVER

(a) Install the 2 bushings to the column upper tube, as shown in the illustration.

(b) Install the tilt lever, as shown in the illustration.

(c) Install a spring nut to the lever.

8. INSTALL 4 TENSION SPRINGS

HINT:

Install the springs with the tilt function at maximum tilt up.

9. INSTALL COLUMN UPPER BRACKET AND COLUMN UPPER CLAMP (See page SR–19)

10. CHECK TILT STEERING OPERATION

SR04G–01

REMOVAL

(See page SR–13)

FREE WHEEL HUB (4WD)

COMPONENTS

SA0C6–02

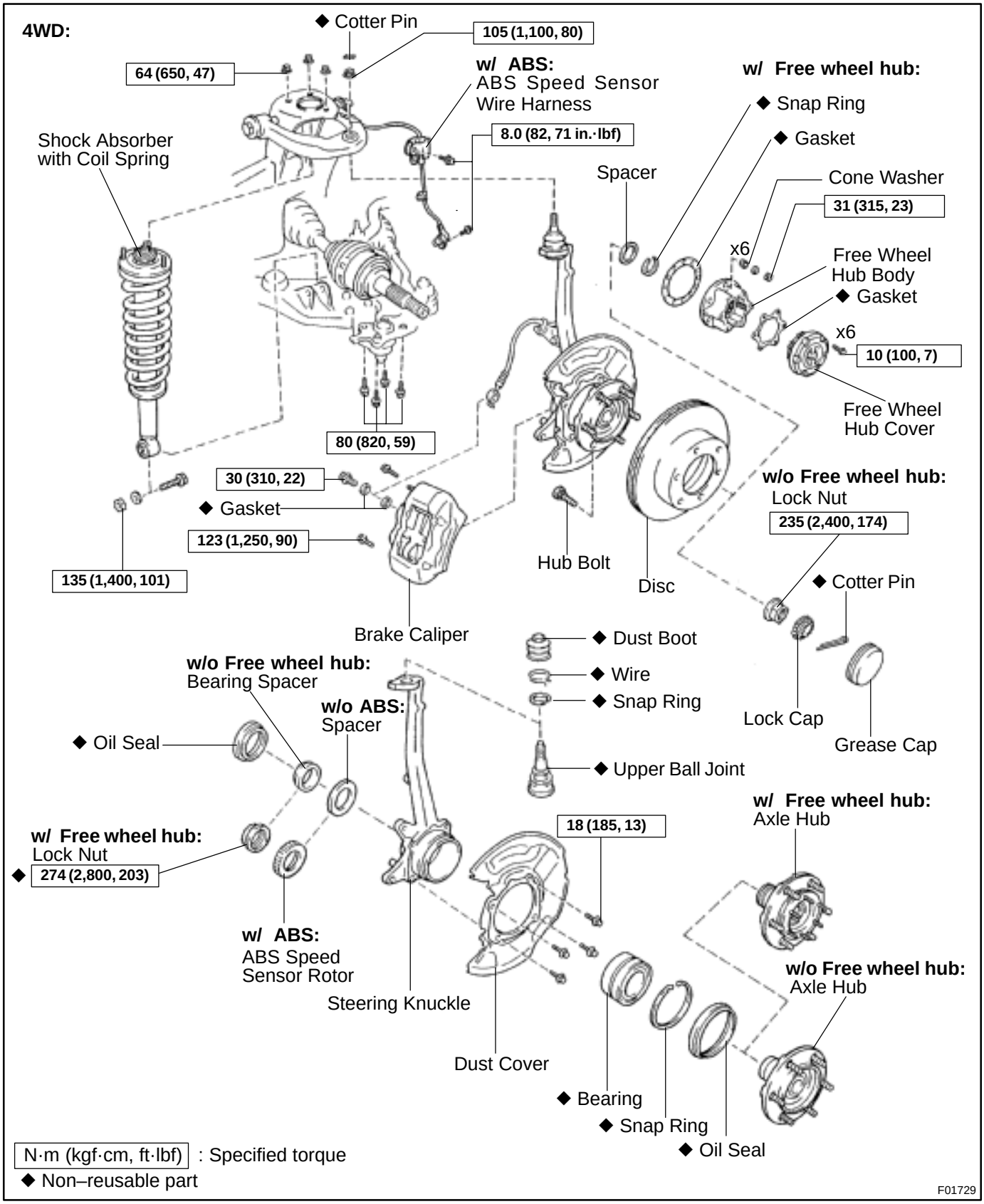

SA0C8–02

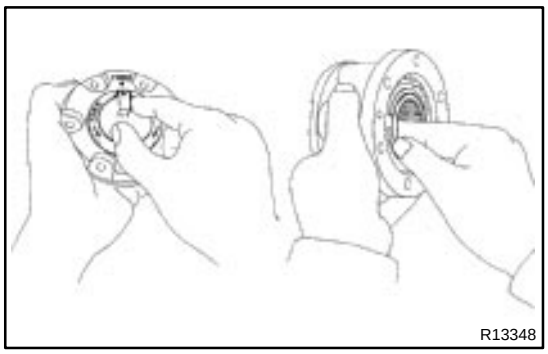

INSPECTION

1. INSPECT COVER, HANDLE AND SEAL

Check the handle moves smoothly.

2. INSPECT INNER HUB

Place the cover in the body and check that the inner hub turns smoothly.

SA0C9–01

INSTALLATION

Installation is in the reverse order of removal (See page SA–32).

SA0C7–02

REMOVAL

1. REMOVE FREE WHEEL HUB COVER

(a) Set the control handle FREE.

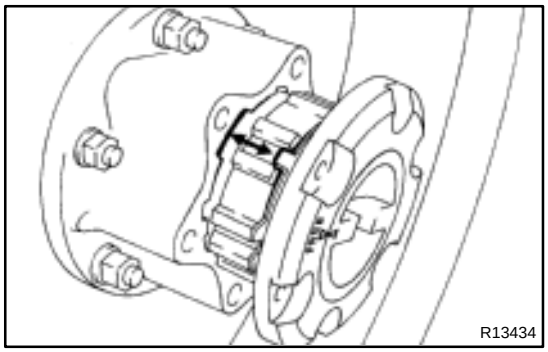

(b) Remove the 6 cover mounting bolts and pull off the cover.
Torque: 10 N·m (100 kgf·cm, 7 ft·lbf)

HINT:
At the time of installation, before installing the hub cover, apply the clutch spline with MP grease.

(c) Remove the gasket.

2. REMOVE FREE WHEEL HUB BODY

(a) Remove the 6 mounting nuts and washers.
Torque: 31 N·m (315 kgf·cm, 23 ft·lbf)



(b) Using a brass bar and hammer, tap on the bolts head and remove the 6 cone washers.

(c) Pull off the free wheel hub body.

(d) Remove the gasket.

FRONT AXLE HUB (4WD and PRE RUNNER)

SA1G2–01

COMPONENTS

HINT:

Pre runner is the model described below.

RZN191L–TRPDKAB, RZN196L–CRPDKAB, VZN195L–CRPDKAB

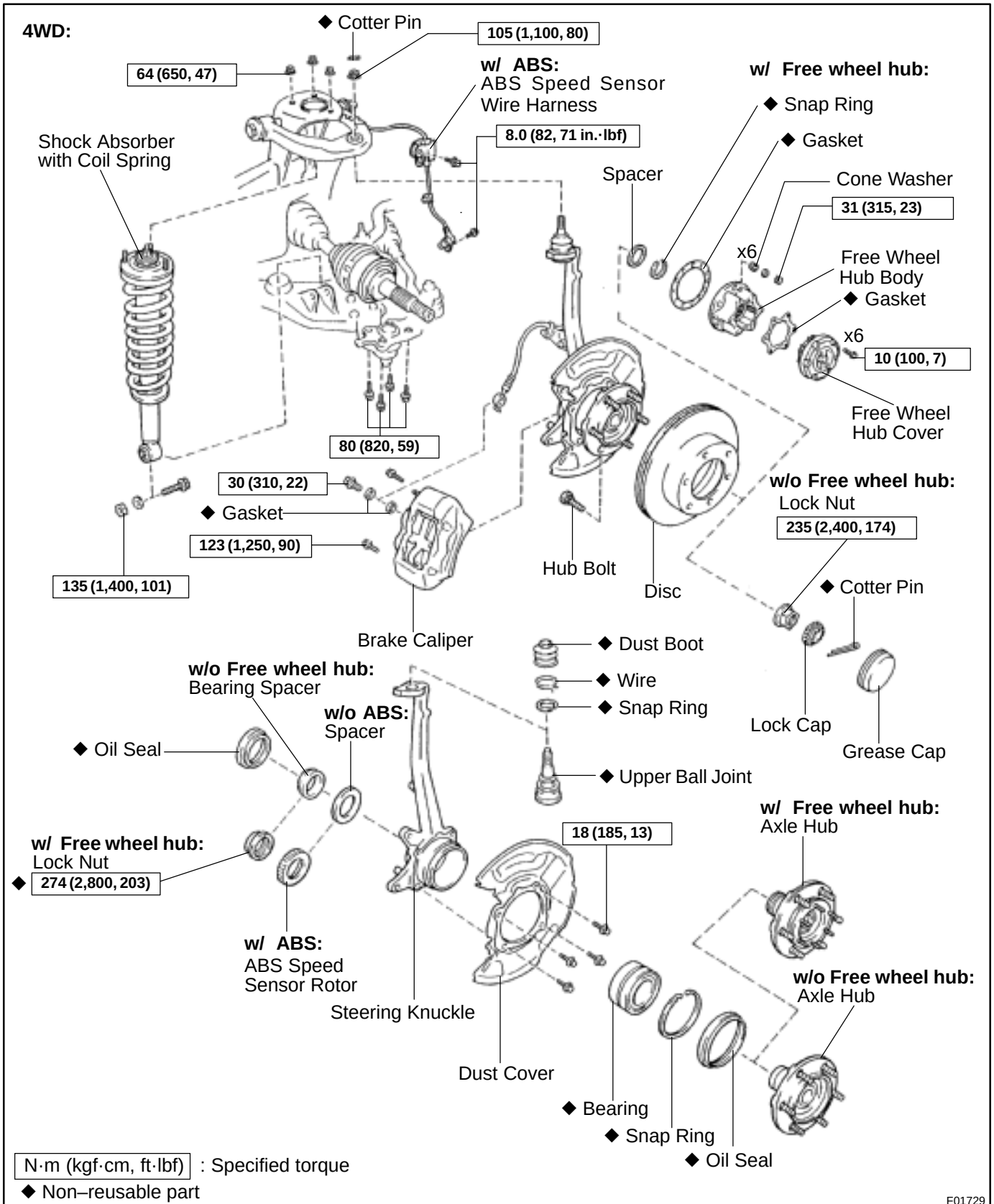

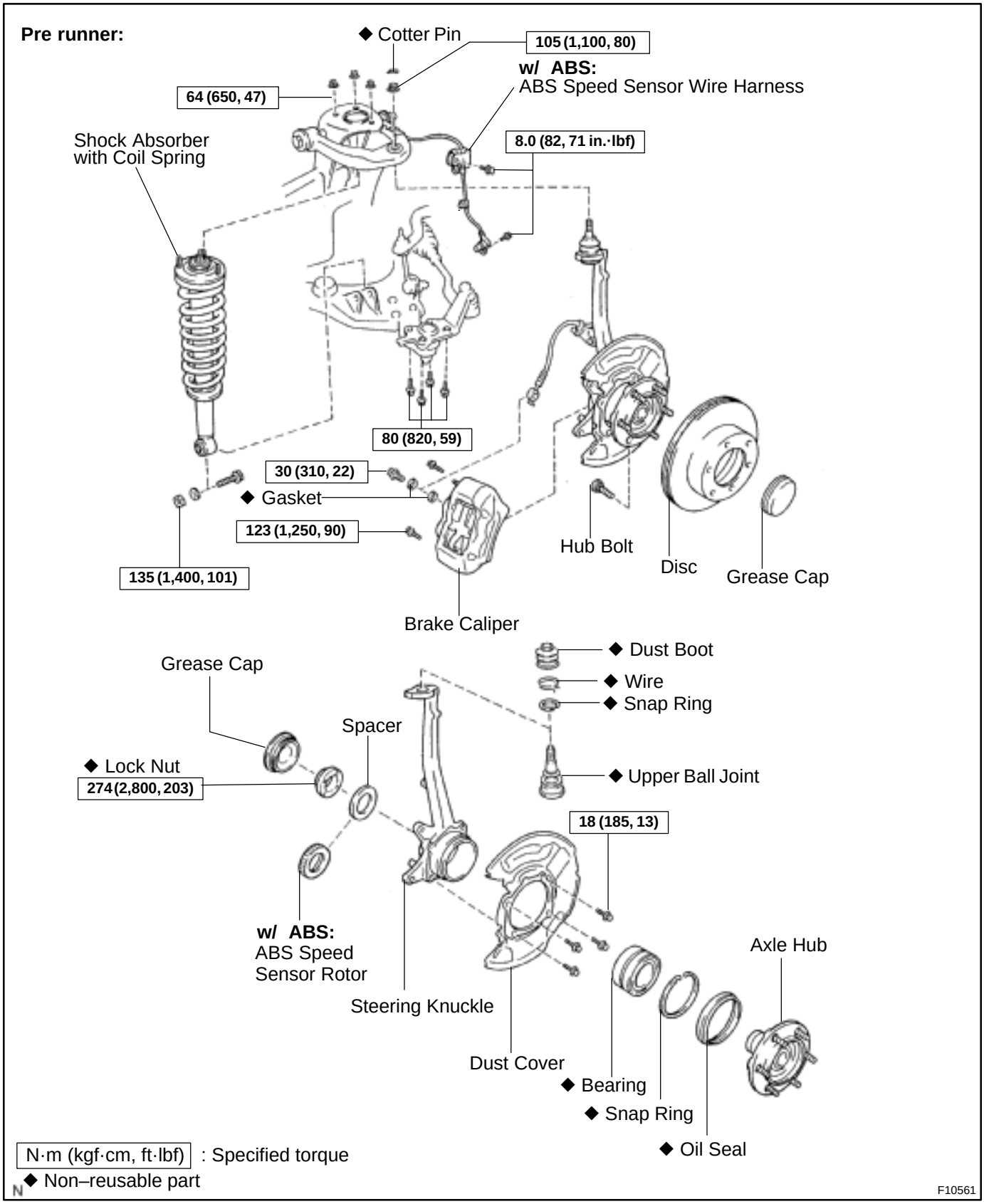
Pre runner:
◆ Cotter Pin
105 (1,100, 80)
w/ ABS:
ABS Speed Sensor Wire Harness
64 (650, 47)
Shock Absorber with Coil Spring
8.0 (82, 71 in.·lbf)
80 (820, 59)
30 (310, 22)
◆ Gasket
123 (1,250, 90)
135 (1,400, 101)
Hub Bolt
Disc
Grease Cap
Brake Caliper
Grease Cap
◆ Dust Boot
◆ Wire
◆ Snap Ring
Spacer
◆ Lock Nut
274 (2,800, 203)
◆ Upper Ball Joint
18 (185, 13)
w/ ABS:
ABS Speed Sensor Rotor
Steering Knuckle
Axle Hub
Dust Cover
◆ Bearing
◆ Snap Ring
◆ Oil Seal
N·m (kgf·cm, ft·lbf) : Specified torque
◆ Non–reusable part
F10561

SA1G4–02

DISASSEMBLY

1. 4WD:
REMOVE OIL SEAL (INSIDE)

(a) Clamp the axle hub in a soft jaw vise.

HINT:

Close vise until it holds hub bolts. Do not tighten further.

(b) Using a screwdriver, remove the oil seal (inside).

2. Pre runner:
REMOVE GREASE CAP

(a) Clamp the axle hub in a soft jaw vise.

HINT:

Close vise until it holds hub bolts. Do not tighten further.

(b) Using a screwdriver, remove the grease cap.

3. w/ Free wheel hub (4WD) and pre runner:
REMOVE LOCK NUT AND ABS SPEED SENSOR ROTOR/SPACER

(a) Using a chisel and hammer, loosen the staked part of the lock nut.

NOTICE:

Be careful not to damage the bushing.

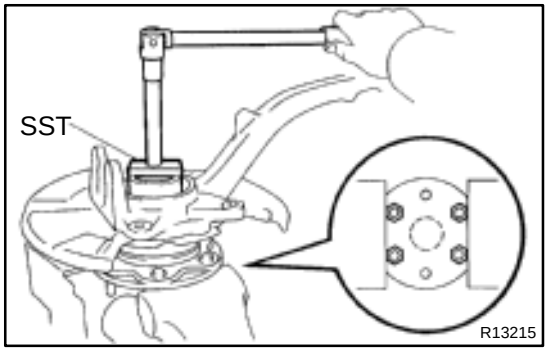

(b) Using SST, remove the lock nut.
SST 09318–12010

(c) Remove the ABS speed sensor rotor/spacer.

NOTICE:

Take care not to scratch the serration of the speed sensor rotor.

4. REMOVE AXLE HUB FROM STEERING KNUCKLE

(a) Remove the 4 bolts and shift the dust cover towards the hub side (outside).

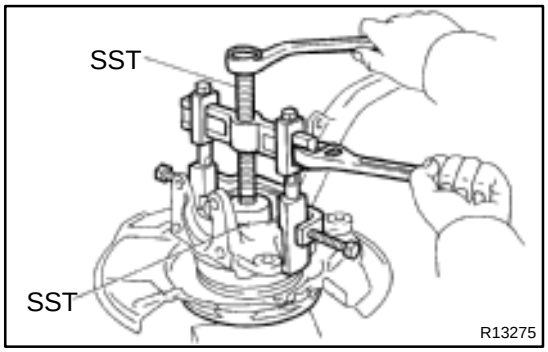

(b) Using SST, remove the axle hub from the steering knuckle.
SST 09710–30021 (09710–03051), 09950–40011 (09951–04020, 09952–04010, 09953–04020, 09954–04010, 09955–04031, 09957–04010, 09958–04011)

(c) Remove the dust cover from the steering knuckle.

(d) w/o Free wheel hub (4WD only):
Remove the bearing spacer and ABS speed sensor rotor/spacer.

5. REMOVE OIL SEAL (OUTSIDE)

Using a screwdriver, remove the oil seal (outside) from the steering knuckle.

6. REMOVE BEARING FROM STEERING KNUCKLE

(a) Using snap ring pliers, remove the snap ring.

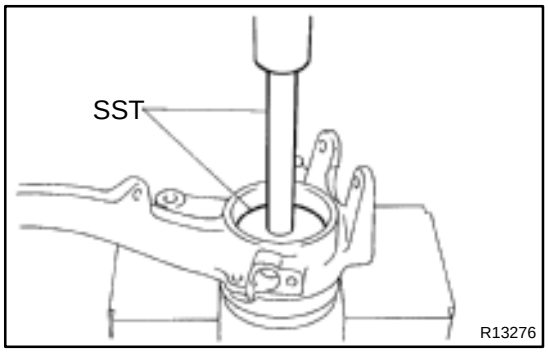

(b) Using SST and a press, remove the bearing from the steering knuckle.

SST 09950–60020 (09951–00810), 09950–70010 (09951–07150)

SA1G6–01

INSTALLATION

Installation is in the reverse order of removal (See page SA–24).

HINT:

After installation, bleed the brake system (See page BR–4), check the front wheel alignment (See page SA–9) and ABS speed sensor signal (See page DI–415).

SA1G5–01

REASSEMBLY

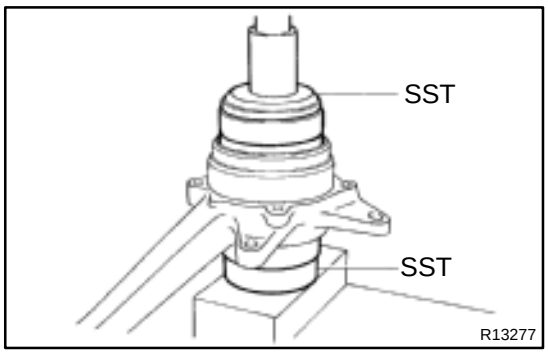

1. INSTALL NEW BEARING

(a) Using SST and a press, install a new bearing to the steering knuckle.
SST 09527–17011, 09950–60020 (09951–00910)

(b) Using snap ring pliers, install a snap ring.

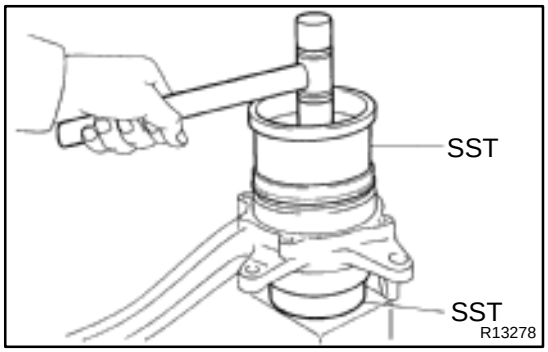

2. INSTALL NEW OIL SEAL (OUTSIDE)

(a) Using SST and a plastic hammer, install a new oil seal (outside).
SST 09223–15030, 09527–17011

(b) Coat the oil seal lip with MP grease.

3. INSTALL AXLE HUB TO STEERING KNUCKLE

(a) Install the dust cover to the steering knuckle with the 4 bolts.
Torque: 18 N·m (185 kgf·cm, 13 ft·lbf)

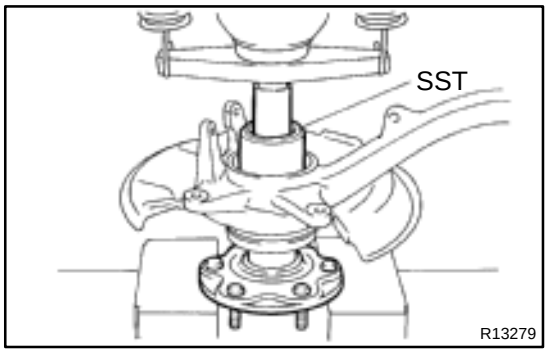

(b) Using SST and a press, install the axle hub to the steering knuckle.
SST 09649–17010

4. INSTALL ABS SPEED SENSOR ROTOR/SPACER

NOTICE:

Do not scratch the serration of the speed sensor rotor.

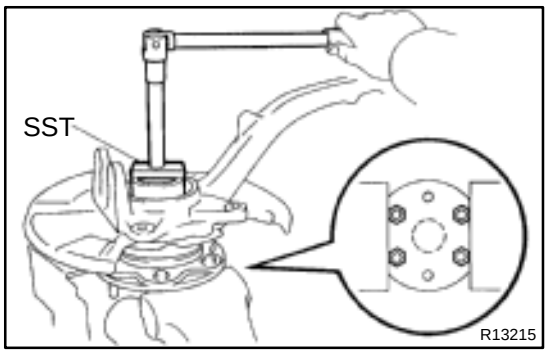

5. w/ Free wheel hub (4WD) and Pre runner: INSTALL NEW LOCK NUT

(a) Using SST, install and torque a new lock nut to the axle hub.
SST 09318–12010
Torque: 274 N·m (2,800 kgf·cm, 203 ft·lbf)

(b) Using a chisel and hammer, stake the lock nut.

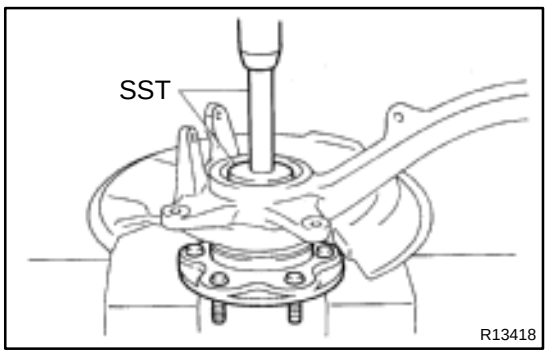

6. w/o Free wheel hub (4WD only): INSTALL BEARING SPACER

Using SST and a press, install the bearing spacer.
SST 09950–60010 (09951–00650),
09950–70010 (09951–07150)

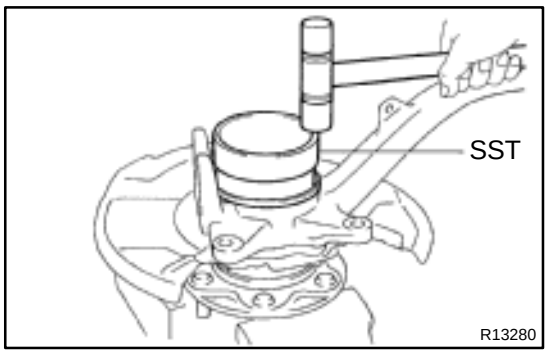

7. 4WD:
INSTALL NEW OIL SEAL (INSIDE)

(a) Using SST and a plastic hammer, install a new oil seal (inside).
SST 09527–17011

HINT:
Strike the SST on its circumference evenly.

(b) Coat the oil seal lip with MP grease.

8. Pre runner:
INSTALL GREASE CAP

SA1G3–02

REMOVAL

1. REMOVE FRONT WHEEL
Torque: 110 N·m (1,150 kgf·cm, 83 ft·lbf)

2. REMOVE SHOCK ABSORBER (See page SA–80)

3. w/o Free wheel hub (4WD only):
DISCONNECT DRIVE SHAFT

(a) Using a screwdriver, remove the grease cap.

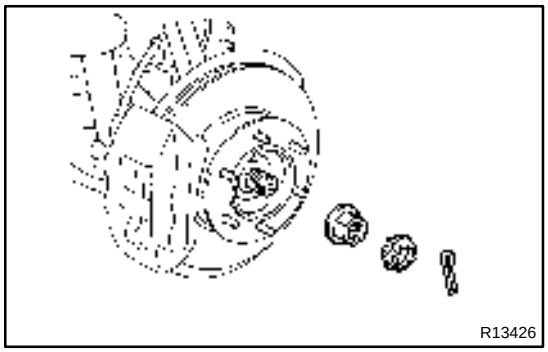
R13426

(b) Remove the cotter pin and lock cap.

HINT:
At the time of installation, if the holes for the cotter pin are not aligned, tighten the nut further up to 60°.

(c) With applying the brakes, remove the lock nut.
Torque: 235 N·m (2,400 kgf·cm, 174 ft·lbf)

4. w/ Free wheel hub:
DISCONNECT DRIVE SHAFT

(a) Remove the free wheel hub (See page SA–32).

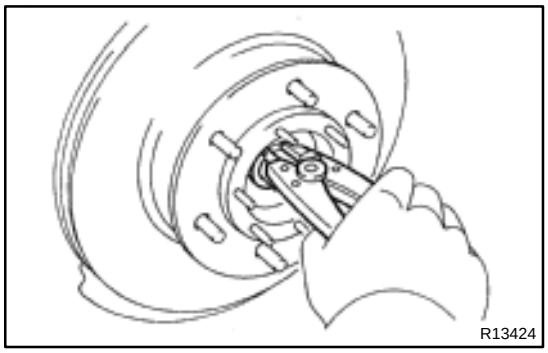
R13424

(b) Using a snap ring expander, remove the snap ring.

(c) Remove the spacer.

5. w/ ABS:
DISCONNECT ABS SPEED SENSOR AND WIRE HARNESS CLAMP FROM STEERING KNUCKLE

Remove the 2 bolts and ABS speed sensor wire harness clamp from the steering knuckle.
Torque: 8.0 N·m (82 kgf·cm, 71 in.·lbf)

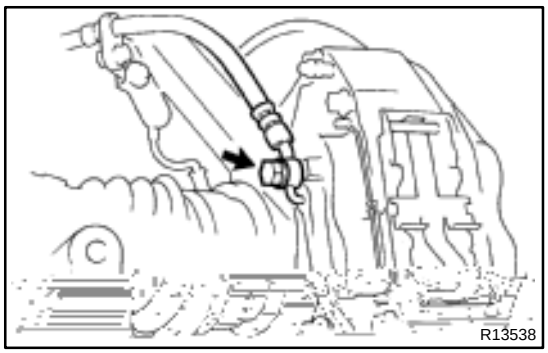
R13538

6. REMOVE BRAKE CALIPER AND DISC

(a) Remove the union bolt and 2 gaskets from the caliper, then disconnect the flexible hose from the caliper.
Torque: 30 N·m (310 kgf·cm, 22 ft·lbf)

HINT:
At the time of installation, install the flexible hose lock securely in the lock hole in the caliper.

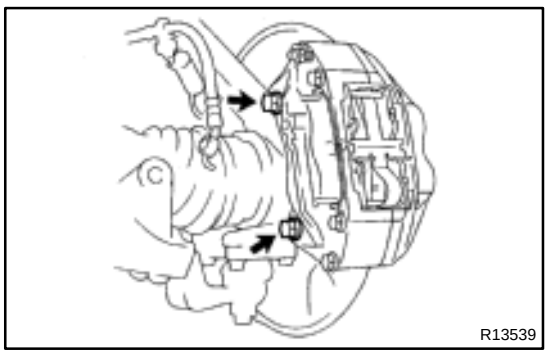
R13539

(b) Remove the 2 bolts, brake caliper and disc.
Torque: 123 N·m (1,250 kgf·cm, 90 ft·lbf)

(c) Support the brake caliper securely.

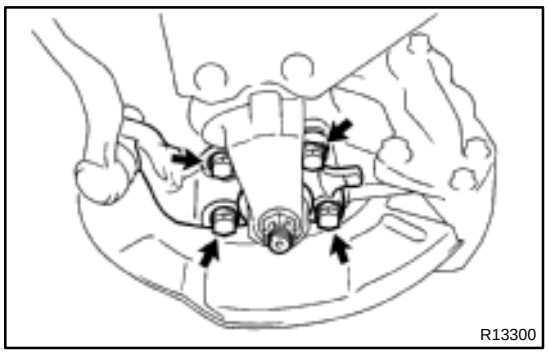

7. DISCONNECT LOWER BALL JOINT

Remove the 4 bolts and disconnect the lower ball joint.

Torque: 80 N·m (820 kgf·cm, 59 ft·lbf)

8. REMOVE STEERING KNUCKLE

(a) Remove the cotter pin and loosen the nut.

Torque: 105 N·m (1,100 kgf·cm, 80 ft·lbf)

HINT:

At the time of installation, if the holes for the cotter pin are not aligned, tighten the nut further up to 60°.

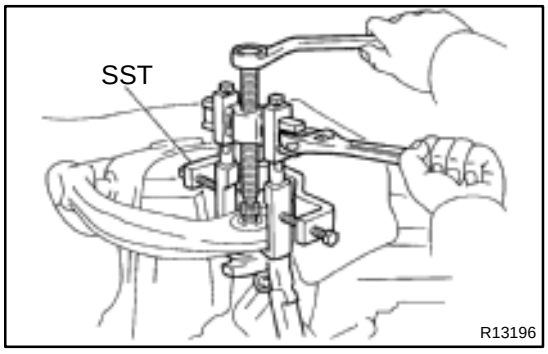

(b) Using SST, disconnect the steering knuckle.

SST 09950–40011 (09951–04010, 09952–04010, 09553–04020, 09554–04010, 09955–04031, 09958–04011)

(c) Remove the nut and steering knuckle.

NOTICE:

4WD:

Be careful not to damage the oil seal and drive shaft boot.

HINT:

4WD:

When it is difficult to disconnect the drive shaft, tap the tip of the drive shaft with a plastic hammer.

FRONT DIFFERENTIAL CARRIER (4WD)

SA09N–02

COMPONENTS

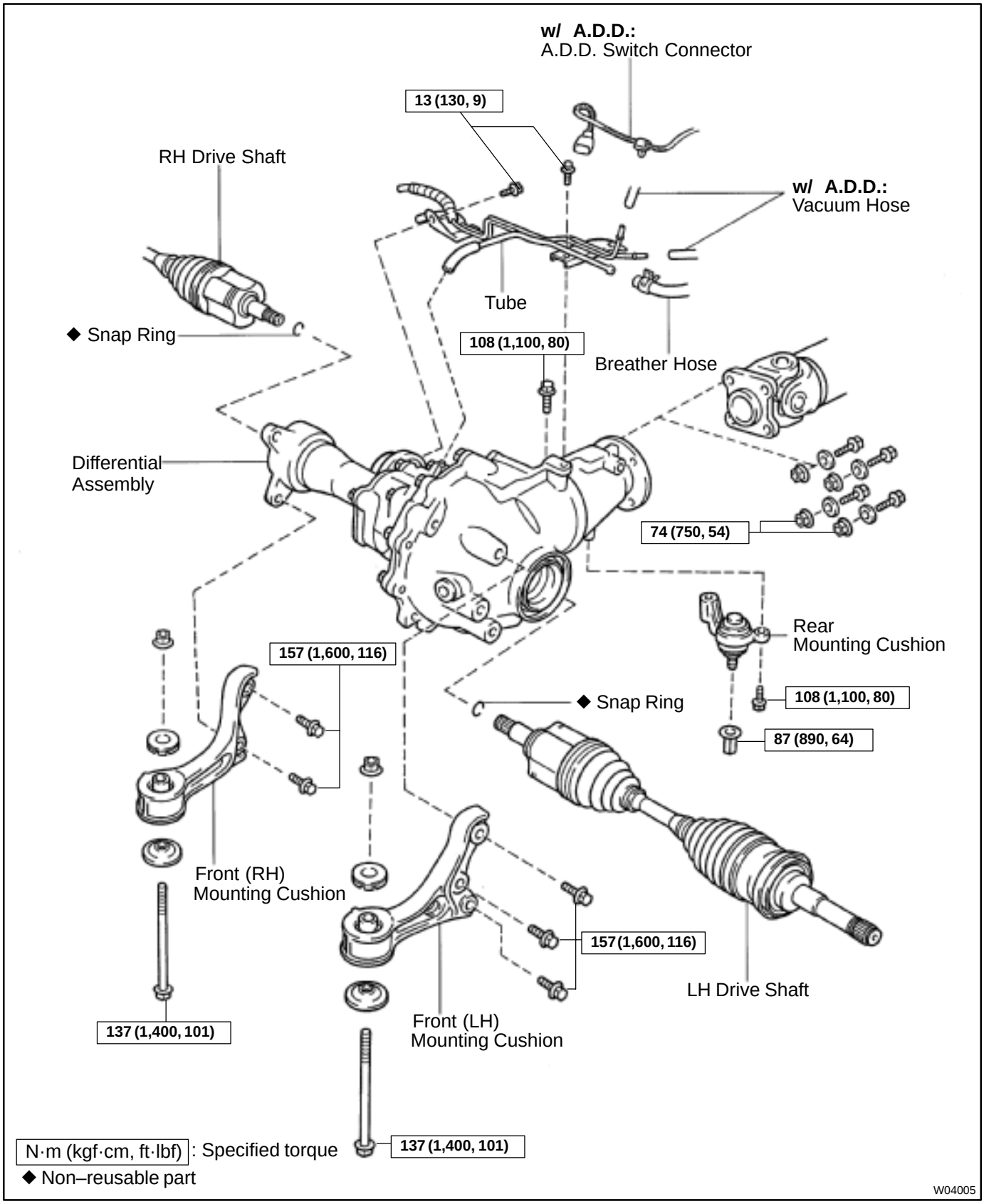

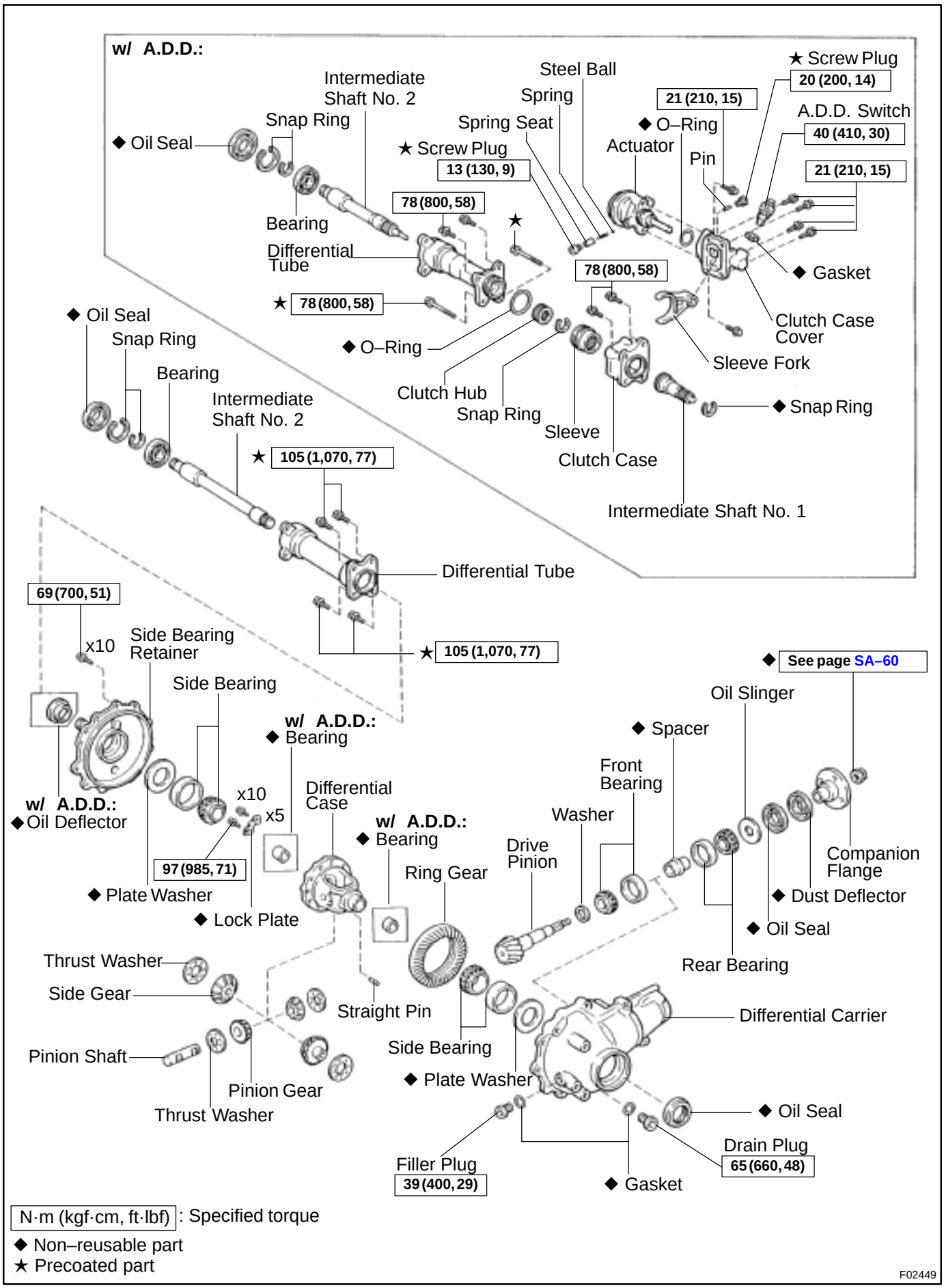

N·m (kgf·cm, ft·lbf) : Specified torque
◆ Non–reusable part
★ Precoated part

F02449

SA09P–04

DISASSEMBLY

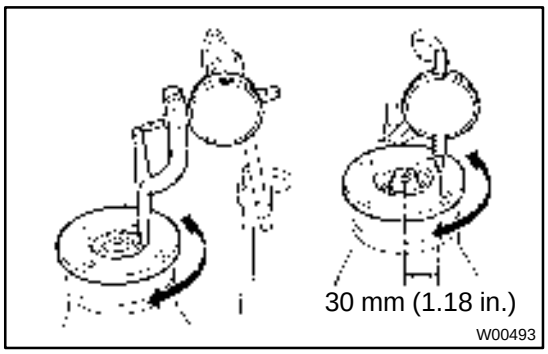

1. CHECK COMPANION FLANGE RUNOUT

Using a dial indicator, measure the vertical and lateral runout of the companion flange.

Maximum runout: 0.10 mm (0.0039 in.)

If the runout exceeds the maximum, replace the companion flange.

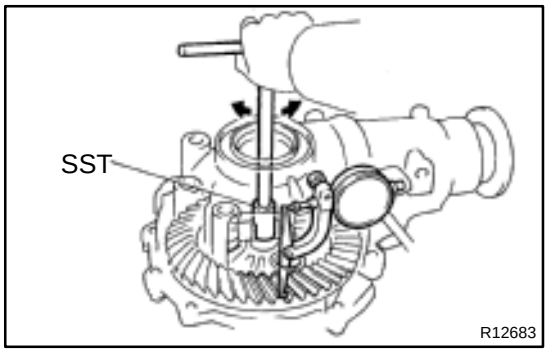

2. CHECK RING GEAR BACKLASH

Using SST and a dial indicator, measure the ring gear backlash.

SST 09564–32011

Backlash: 0.13 – 0.18 mm (0.0051 – 0.0071 in.)

HINT:

Measure at 3 or more places on the circumference of the ring gear.

If the backlash is not within the specified value, adjust the side bearing preload or repair as necessary.

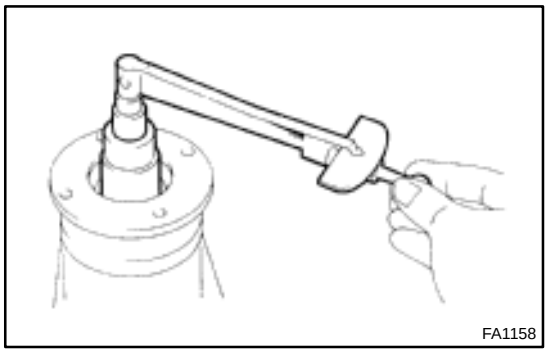

3. MEASURE DRIVE PINION PRELOAD

Using a torque wrench, measure the preload of the drive pinion using the between the drive pinion and ring gear.

Preload (at starting):

0.6 – 1.0 N·m (6 – 10 kgf·cm, 5.2 – 8.7 in.·lbf)

4. CHECK TOTAL PRELOAD

Using a torque wrench, measure the total preload with the teeth of the drive pinion and ring gear in contact.

Total preload (at starting):

Drive pinion preload plus

0.4 – 0.6 N·m (4 – 6 kgf·cm, 3.5 – 5.2 in.·lbf)

If necessary, disassemble and inspect the differential.

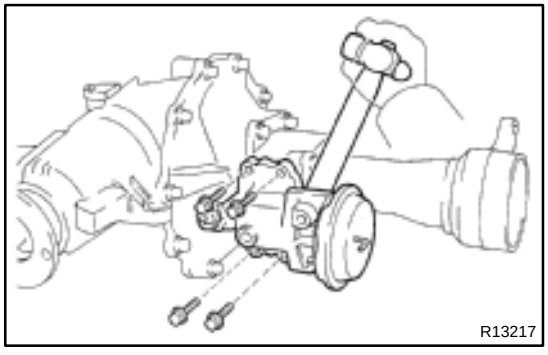

5. w/ A.D.D.:

REMOVE A.D.D. ACTUATOR

(a) Remove the 4 bolts.

(b) Using a hammer handle, remove the actuator.

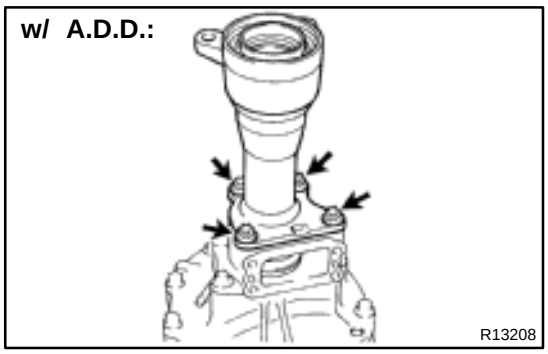

6. w/ A.D.D.:
REMOVE DIFFERENTIAL TUBE

(a) Using a torx socket (E14), remove the 4 torx bolts.
(b) Using a plastic hammer, tap on the differential tube to remove it.
(c) Remove the sleeve.
(d) Remove the O–ring from the differential tube.

7. w/o A.D.D.:
REMOVE DIFFERENTIAL TUBE

(a) Remove the 4 bolts.
(b) Using a plastic hammer, tap on the differential tube to remove it.

8. w/ A.D.D.:
REMOVE CLUTCH CASE

(a) Using a torx socket (E14), remove the 2 torx bolts.
(b) Using a plastic hammer, tap on the clutch case to remove it.

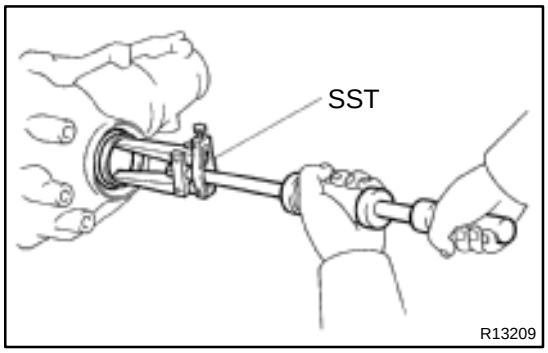

9. REMOVE SIDE OIL SEAL

Using SST, remove the side oil seal.
SST 09308–00010

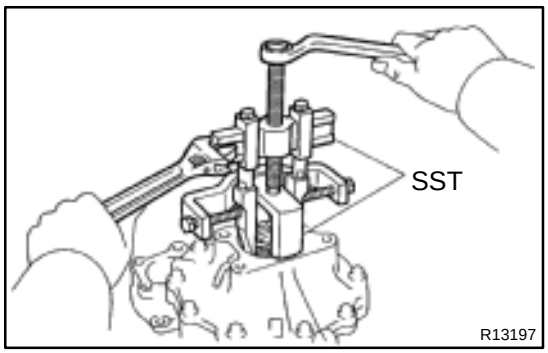

10. w/ A.D.D.:
REMOVE INTERMEDIATE SHAFT NO. 1

Using SST, remove the intermediate shaft No. 1.
SST 09350–20015 (09369–20040), 09950–40011 (09951–04010, 09952–04010, 09953–04020, 09954–04010, 09955–04011, 09957–04010, 09958–04011)

11. REMOVE COMPANION FLANGE

(a) Using a chisel and hammer, unstake the nut.

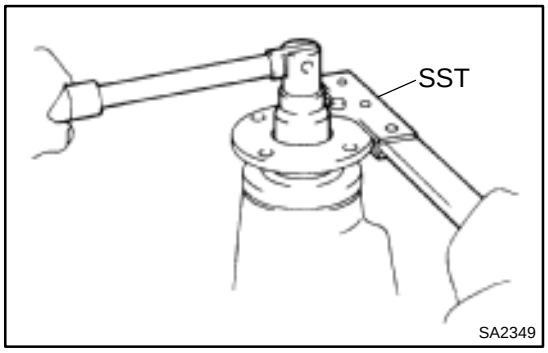

(b) Using SST to hold the flange, remove the nut.
SST 09330–00021

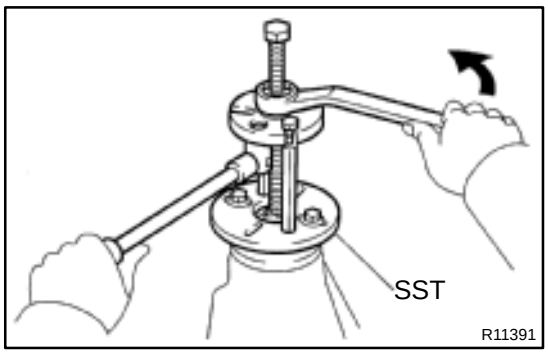

(c) Using SST, remove the companion flange.
SST 09950–30011 (09951–03010, 09953–03010, 09954–03010, 09955–03030, 09956–03020)

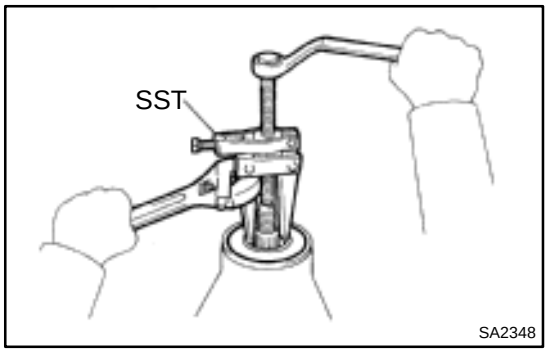

12. REMOVE OIL SEAL AND OIL SLINGER

(a) Using SST, remove the oil seal.
SST 09350–32014 (09308–10010)

(b) Remove the oil slinger.

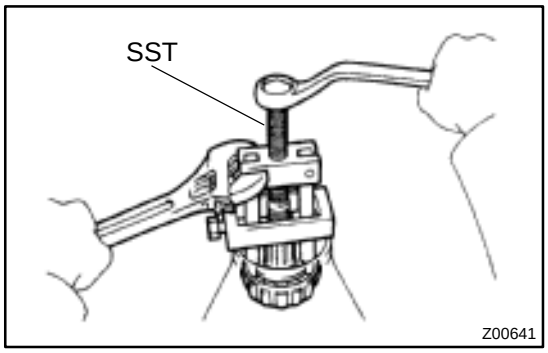

13. REMOVE REAR BEARING AND BEARING SPACER

(a) Using SST, remove the rear bearing from the drive pinion.
SST 09556–22010

(b) Remove the bearing spacer.

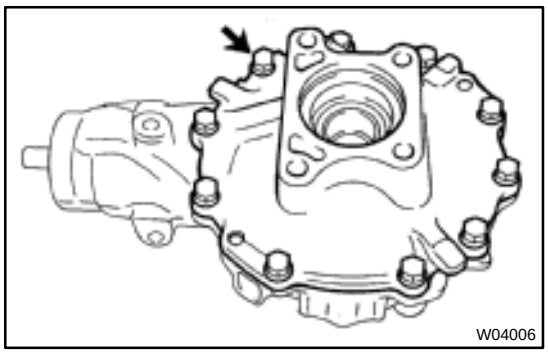

14. REMOVE SIDE BEARING RETAINER

Remove the 10 bolts and tap out the retainer with a plastic hammer.

15. REMOVE DIFFERENTIAL CASE ASSEMBLY

16. REMOVE DRIVE PINION FROM DIFFERENTIAL CARRIER

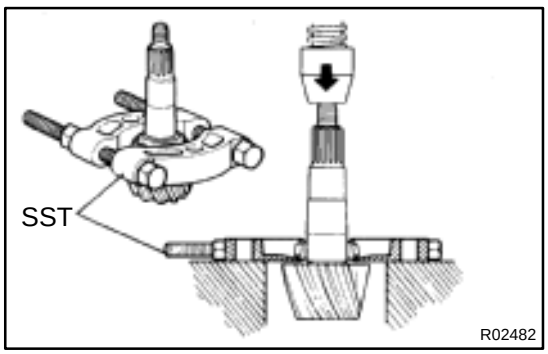

17. REMOVE DRIVE PINION FRONT BEARING

Using SST and a press, remove the bearing and washer from the drive pinion.
SST 09950–00020

HINT:
If the drive pinion or ring gear is damaged replace them as a set.

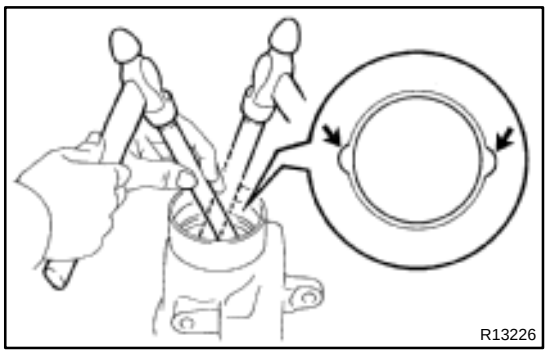

18. REMOVE DRIVE PINION BEARING OUTER RACES

(a) Using a brass bar and hammer, remove the front bearing outer race.

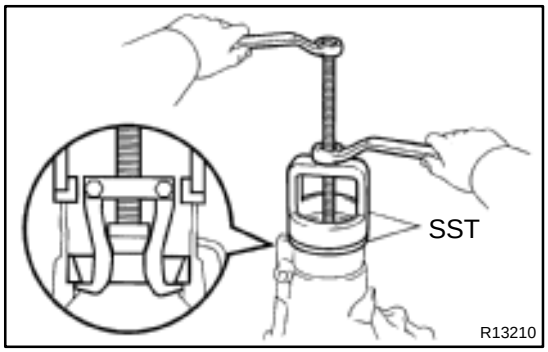

(b) Using SST, remove the rear bearing outer race.
SST 09502–12010, 09612–65014 (09612–01020, 09612–01050)

19. REMOVE SIDE BEARING OUTER RACES

HINT:

- Measure the plate washer and note down the thickness.
- Tag the bearing outer races to show the location for reassembling.

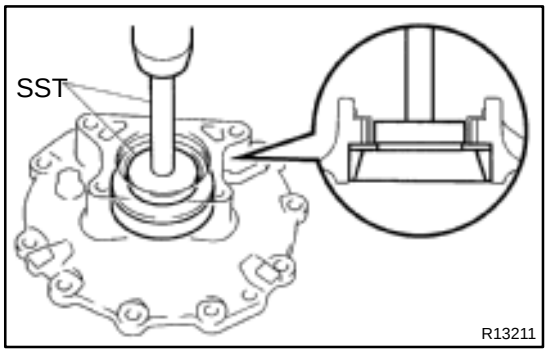

(a) Using SST and a press, remove the plate washer and outer race from the bearing retainer.
SST 09950–60010 (09951–00540), 09950–70010 (09951–07150)

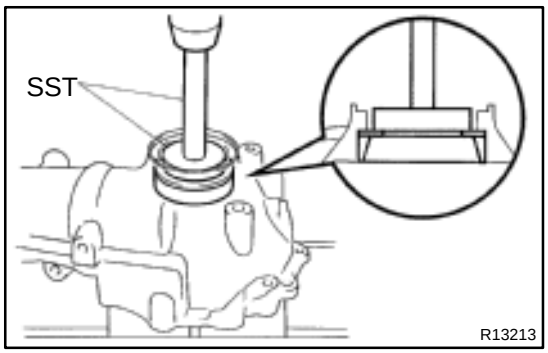

(b) Using SST and a press, remove the plate washer and outer race from the differential carrier.
SST 09950–60010 (09951–00650), 09950–70010 (09951–07150)

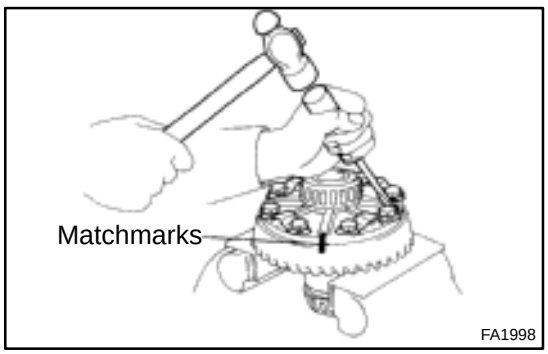

20. REMOVE RING GEAR

(a) Place matchmarks on the ring gear and differential case.
(b) Using a screwdriver and hammer, unstake the 5 lock plates.
(c) Remove the 10 bolts and 5 lock plates.
(d) Using a plastic hammer, tap on the ring gear to separate it from the differential case.

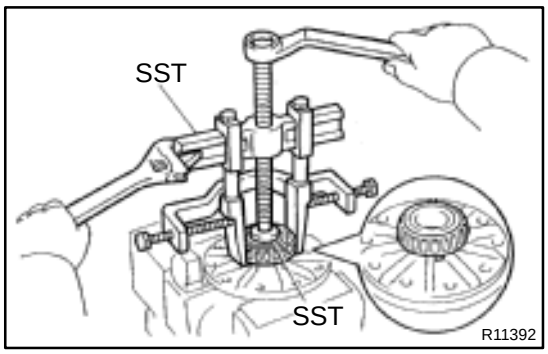

21. REMOVE SIDE BEARINGS

Using SST, remove the 2 side bearings from the differential case.

SST 09950–40011 (09951–04010, 09952–04010, 09953–04020, 09954–04010, 09955–04061, 09957–04010, 09958–04011), 09950–60010 (09951–00480)

HINT:

Fix the claws of SST to the notch in the differential case.

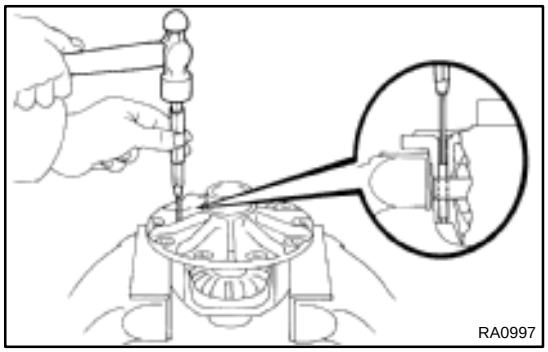

22. DISASSEMBLE DIFFERENTIAL CASE ASSEMBLY

(a) Using a pin punch and hammer, remove the straight pin.

(b) Remove the pinion shaft, 2 pinion gears, pinion gear thrust washers, side gears and side gear thrust washers from the differential case.

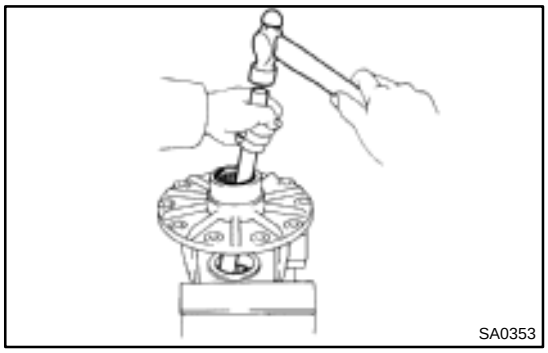

23. w/ A.D.D.:
REMOVE BEARING

Using a brass bar and hammer, remove the 2 bearings.

SA09S–02

INSTALLATION

Installation is in the reverse order of removal (See page SA–51).

HINT:

After installation, fill the differential with hypoid gear oil (See page SA–46).

SA09R–02

REASSEMBLY

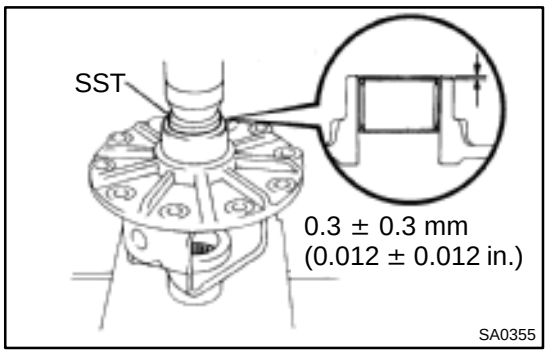

1. w/ A.D.D.:

INSTALL NEW BEARINGS

Using SST and a press, install 2 new bearings.

SST 09950–60010 (09951–00380)

Bearing press in depth:

0.3 ± 0.3 mm (0.012 ± 0.012 in.)

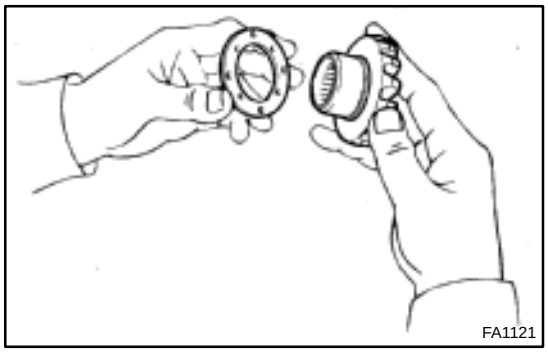

2. ASSEMBLE DIFFERENTIAL CASE

(a) Install the 2 thrust washers on the side gears.

HINT:

Refer to the table below to select thrust washers which will ensure that the backlash is within the specification.

Washer thickness:

Thickness mm (in.)	Thickness mm (in.)
0.96 – 1.04 (0.0378 – 0.0409)	1.16 – 1.24 (0.0457 – 0.0488)
1.06 – 1.14 (0.0417 – 0.0449)	1.26 – 1.34 (0.0496 – 0.0528)

(b) Install the 2 side gears, pinion gears, pinion gear thrust washers and pinion shaft in the differential case.

HINT:

Align the holes of the differential case and pinion shaft.

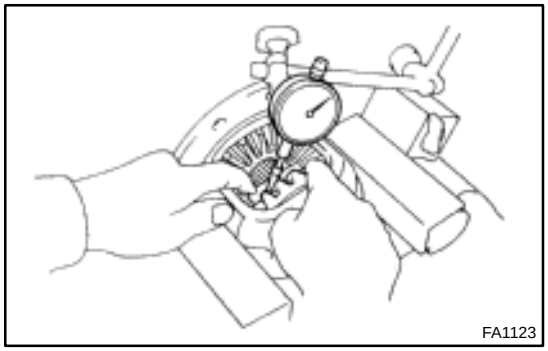

(c) Using a dial indicator, measure the side gear backlash while holding one pinion gear toward the differential case.

Backlash: 0 – 0.20 mm (0 – 0.0079 in.)

If the backlash is not within the specified value, replace the side gear thrust washer of the different thickness.

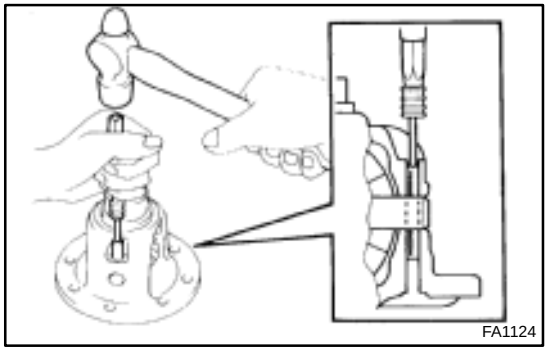

3. INSTALL STRAIGHT PIN AND STAKE DIFFERENTIAL CASE

(a) Using a pin punch and hammer, install the straight pin through the differential case and hole of the pinion shaft.

(b) Stake the differential case.

4. INSTALL RING GEAR ON DIFFERENTIAL CASE

(a) Clean the contact surfaces of the differential case and ring gear.

(b) Heat the ring gear to about 100˚C (212˚F) in boiling water.

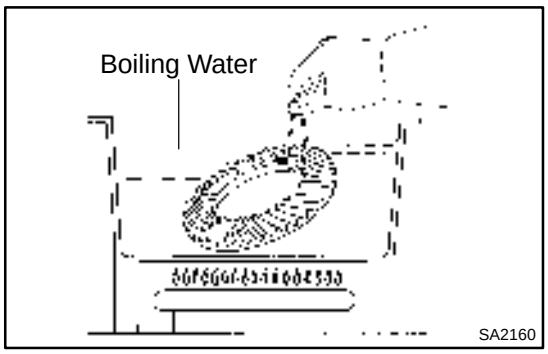

(c) Carefully take the ring gear out of the boiling water.
(d) After the moisture on the ring gear has completely evaporated, quickly install the ring gear to the differential case.

HINT:

Align the matchmarks on the ring gear and differential case.

(e) Temporarily install 5 new lock plates and 10 bolts so that the bolt holes in the ring gear and differential case are not misaligned.
(f) After the ring gear has cooled sufficiently, torque the ring gear set bolts.

Torque: 97 N·m (985 kgf·cm, 71 ft·lbf)

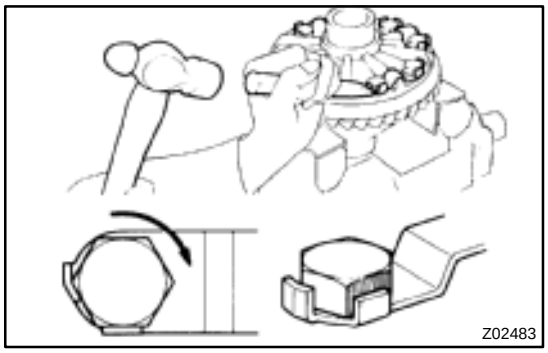

(g) Using a chisel and hammer, stake the 5 lock plates.

HINT:

Stake the claws of the lock plates to fix the bolts. For the claw contacting the protruding portion of the bolt, stake only the half of it along the tightening direction.

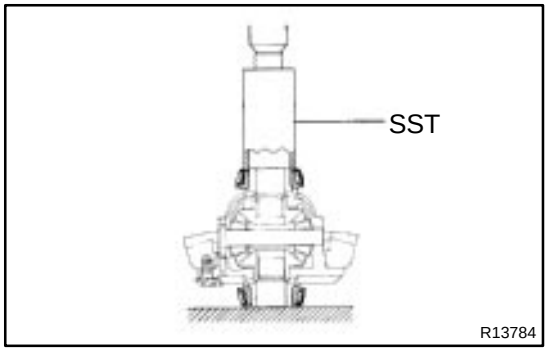

5. INSTALL SIDE BEARINGS

Using SST and a press, install the bearing into the differential case.

SST 09226–10010

6. INSTALL SIDE BEARING OUTER RACES

HINT:

When replacing the side bearings, fit the thinnest washers to each bearing and when reusing the bearings, fit the washers with the same thickness as removed.

(a) Install a new plate washer to the bearing retainer.
(b) Using SST and a press, install the bearing outer race.

SST 09950–60020 (09951–00790),
09950–70010 (09951–07150)

(c) Install a new plate washer to the differential carrier.

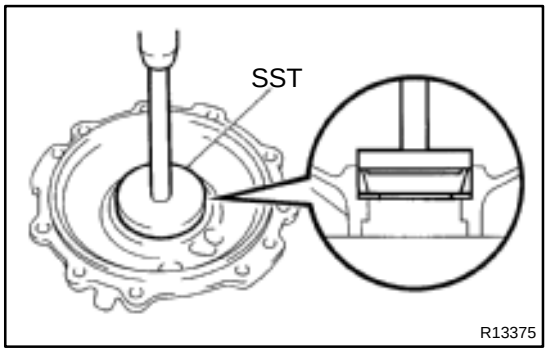

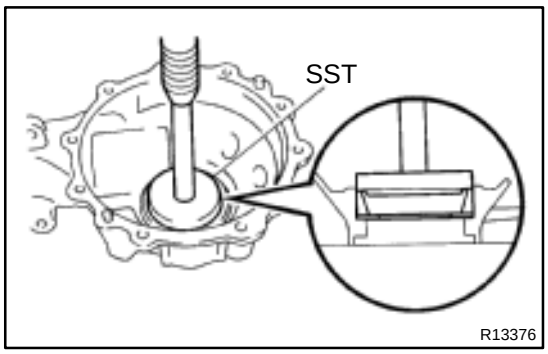

(d) Using SST and a press, install the bearing outer race.
SST 09950–60020 (09951–00790),
09950–70010 (09951–07150)

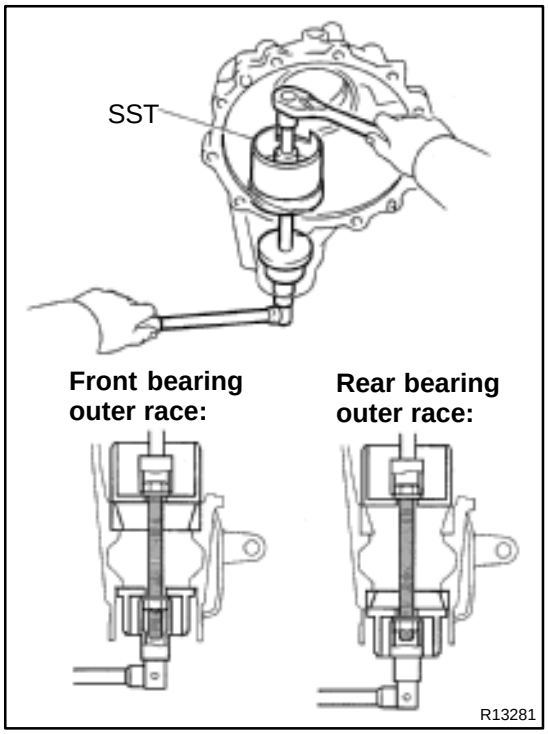

7. INSTALL DRIVE PINION FRONT AND REAR BEARING OUTER RACES

Using SST, install the 2 outer races.
SST 09570–22011

8. INSTALL DRIVE PINION FRONT BEARING

(a) Install the washer on the drive pinion.

HINT:

First fit a washer with the same thickness as the washer which was removed, then after checking the tooth contact pattern, replace the washer with one of a different thickness if necessary.

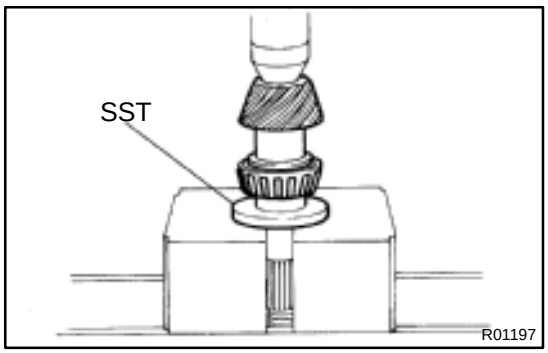

(b) Using SST and a press, install the front bearing onto the drive pinion.
SST 09506–30012

9. TEMPORARILY ADJUST DRIVE PINION PRELOAD

(a) Install the drive pinion, rear bearing and oil slinger.

HINT:

Assemble the spacer and oil seal after adjusting the ring gear tooth contact pattern.

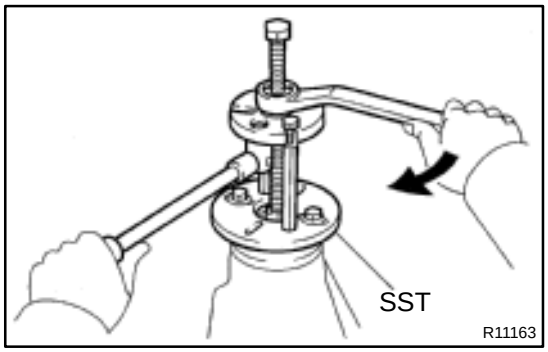

(b) Using SST, install the companion flange.
SST 09950–30011 (09951–03010, 09953–03010, 09954–03010, 09955–03030, 09956–03020)

(c) Coat the threads of the nut with hypoid gear oil.

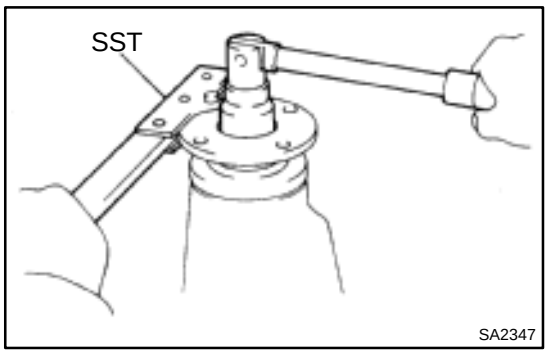

(d) Using SST to hold the flange, tighten the nut.

HINT:

Adjust the drive pinion preload by tightening the companion flange nut.

SST 09330–00021

NOTICE:

As there is no spacer, tighten the nut a little at a time, being careful not to overtighten it.

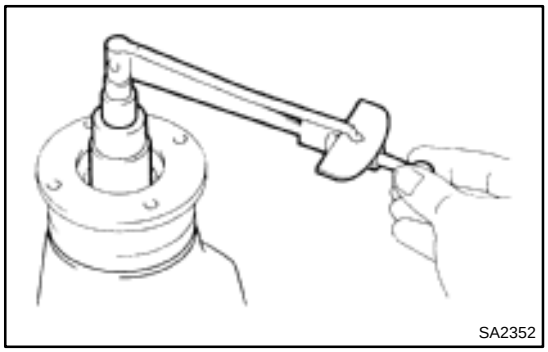

(e) Using a torque wrench, measure the preload of the drive pinion using the backlash between the drive pinion and ring gear.

Preload (at starting):

New bearing

1.2 – 1.9 N·m (12 – 19 kgf·cm, 10.4 – 16.5 in.·lbf)

Reused bearing

0.6 – 1.0 N·m (6 – 10 kgf·cm, 5.2 – 8.7 in.·lbf)

10. INSTALL DIFFERENTIAL CASE IN DIFFERENTIAL CARRIER

11. ADJUST RING GEAR BACKLASH

(a) Install the side bearing retainer with the 10 bolts.

Torque: 69 N·m (700 kgf·cm, 51 ft·lbf)

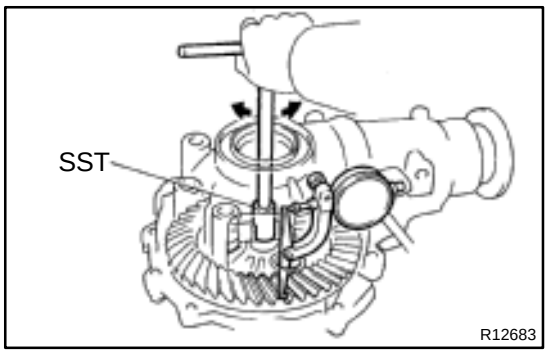

(b) Using SST and a dial indicator, measure the ring gear backlash.

SST 09564–32011

Backlash: 0.13 – 0.18 mm (0.0051 – 0.0071 in.)

(c) If the backlash is not within the specified value, adjust by either increasing or decreasing the thickness of washers on both sides by an equal amount.

HINT:

There should be no clearance between the plate washer and case. Ensure that there is ring gear backlash.

Washer thickness:

Thickness mm (in.)	Thickness mm (in.)	Thickness mm (in.)
2.00 – 2.02 (0.0787 – 0.0795)	2.27 – 2.29 (0.0894 – 0.0902)	2.54 – 2.56 (0.1000 – 0.1008)
2.03 – 2.05 (0.0799 – 0.0807)	2.30 – 2.32 (0.0906 – 0.0913)	2.57 – 2.59 (0.1012 – 0.1020)
2.06 – 2.08 (0.0811 – 0.0819)	2.33 – 2.35 (0.0917 – 0.0925)	2.60 – 2.62 (0.1024 – 0.1031)
2.09 – 2.11 (0.0823 – 0.0831)	2.36 – 2.38 (0.0929 – 0.0937)	2.63 – 2.65 (0.1035 – 0.1043)
2.12 – 2.14 (0.0835 – 0.0843)	2.39 – 2.41 (0.0941 – 0.0949)	2.66 – 2.68 (0.1047 – 0.1055)
2.15 – 2.17 (0.0846 – 0.0854)	2.42 – 2.44 (0.0953 – 0.0961)	2.69 – 2.71 (0.1059 – 0.1067)
2.18 – 2.20 (0.0858 – 0.0866)	2.45 – 2.47 (0.0965 – 0.0972)	2.72 – 2.74 (0.1071 – 0.1079)
2.21 – 2.23 (0.0870 – 0.0878)	2.48 – 2.50 (0.0976 – 0.0984)	2.75 – 2.77 (0.1083 – 0.1091)
2.24 – 2.26 (0.0882 – 0.0890)	2.51 – 2.53 (0.0988 – 0.0996)	2.78 – 2.80 (0.1094 – 0.1102)

12. MEASURE TOTAL PRELOAD

Using a torque wrench, measure the preload with the teeth of the drive pinion and ring gear in contact.

Total preload (at starting):
Drive pinion preload plus
0.4 – 0.6 N·m (4 – 6 kgf·cm, 3.5 – 5.2 in.·lbf)

13. INSPECT TOOTH CONTACT BETWEEN RING GEAR AND DRIVE PINION

(a) Remove the side bearing retainer and differential case.

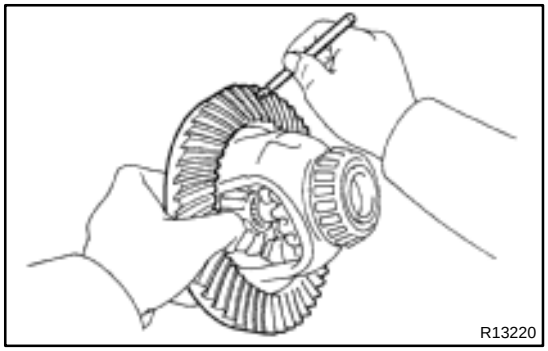

(b) Coat 3 or 4 teeth at three different positions on the ring gear with red lead primer.
(c) Install the differential case and side bearing retainer.
Torque: 69 N·m (700 kgf·cm, 51 ft·lbf)
(d) Hold the companion flange firmly and rotate the ring gear in both directions.
(e) Remove the side bearing retainer and differential case.
(f) Inspect the tooth contact pattern.

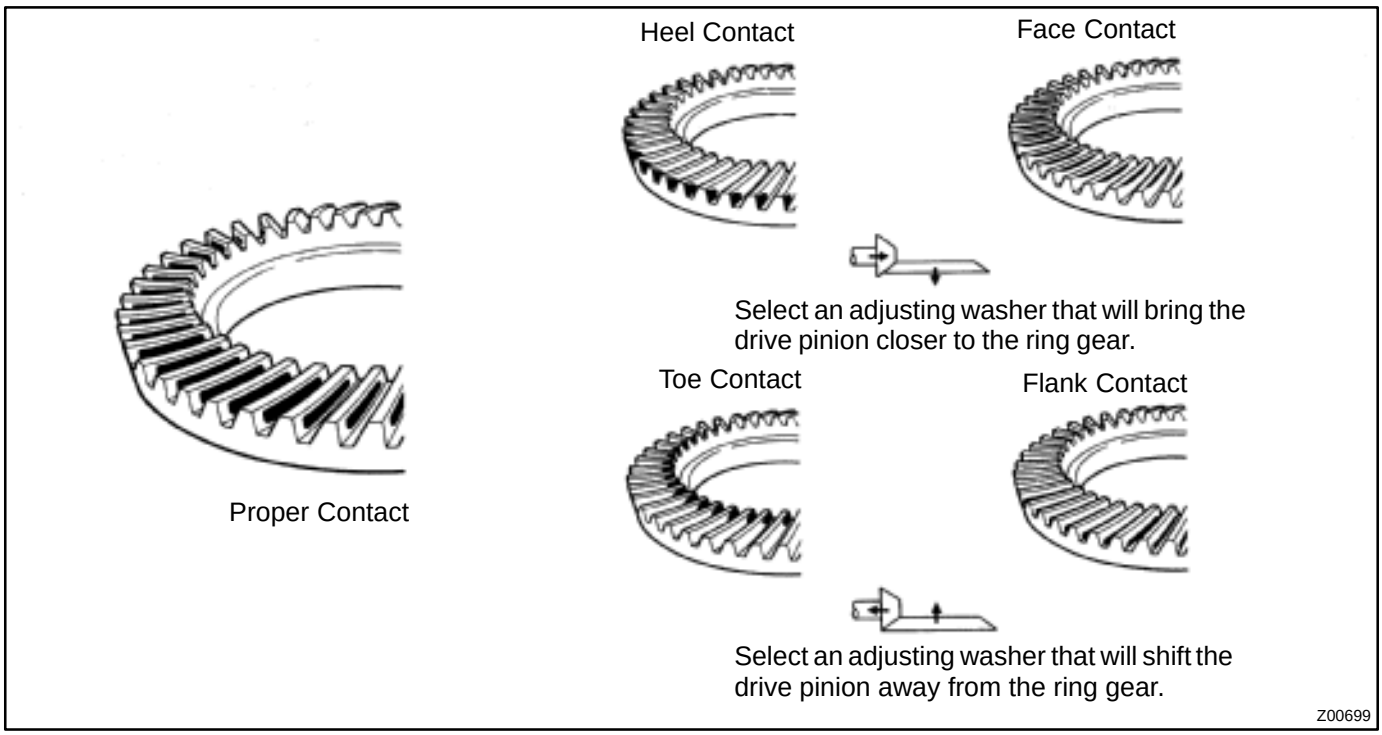

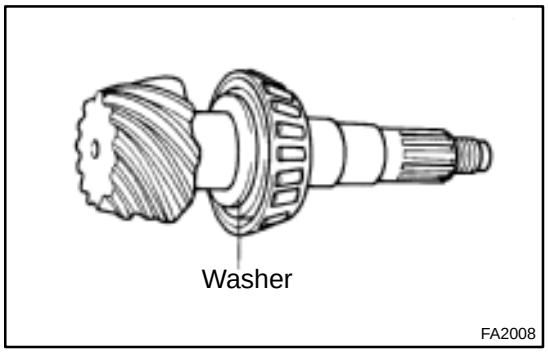

If the teeth are not contacting properly, use the following table to select a proper washer for correction.

Washer thickness:

Thickness mm (in.)	Thickness mm (in.)	Thickness mm (in.)
1.69 – 1.71 (0.0665 – 0.0673)	1.93 – 1.95 (0.0760 – 0.0768)	2.17 – 2.19 (0.0854 – 0.0862)
1.72 – 1.74 (0.0677 – 0.0685)	1.96 – 1.98 (0.0772 – 0.0780)	2.20 – 2.22 (0.0866 – 0.0874)
1.75 – 1.77 (0.0689 – 0.0697)	1.99 – 2.01 (0.0783 – 0.0791)	2.23 – 2.25 (0.0878 – 0.0886)
1.78 – 1.80 (0.0701 – 0.0709)	2.02 – 2.04 (0.0795 – 0.0803)	2.26 – 2.28 (0.0890 – 0.0898)
1.81 – 1.83 (0.0713 – 0.0720)	2.05 – 2.07 (0.0807 – 0.0815)	2.29 – 2.31 (0.0902 – 0.0909)
1.84 – 1.86 (0.0724 – 0.0732)	2.08 – 2.10 (0.0819 – 0.0827)	2.32 – 2.34 (0.0913 – 0.0921)
1.87 – 1.89 (0.0736 – 0.0744)	2.11 – 2.13 (0.0831 – 0.0839)	–
1.90 – 1.92 (0.0748 – 0.0756)	2.14 – 2.16 (0.0843 – 0.0850)	–

14. REMOVE COMPANION FLANGE AND OIL SLINGER (See page SA–52)

15. REMOVE REAR BEARING (See page SA–52)

16. INSTALL NEW BEARING SPACER, REAR BEARING AND OIL SLINGER

(a) Install a new bearing spacer and place the rear bearing and oil slinger.

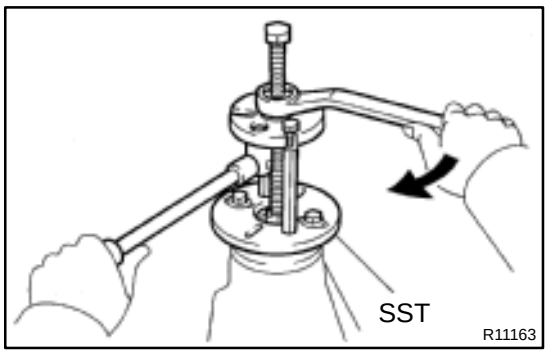

(b) Using SST and the companion flange, install the rear bearing, then remove the companion flange.
SST 09950–30011 (09951–03010, 09953–03010, 09954–03010, 09955–03030, 09956–03020)

17. INSTALL OIL SEAL

(a) Coat a new oil seal lip with MP grease.

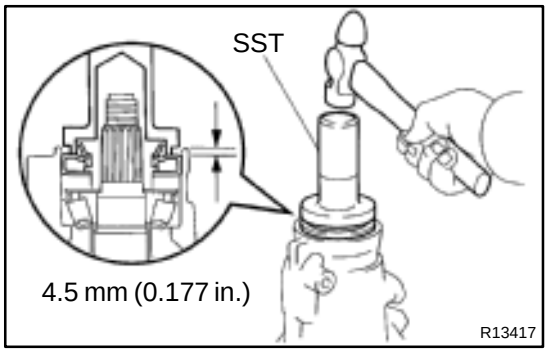

(b) Using SST and a hammer, install the oil seal.
SST 09554–22010
Oil seal drive in depth: 4.5 mm (0.177 in.)

18. INSTALL COMPANION FLANGE

(a) Place the companion flange on the drive pinion.

(b) Coat the threads of a new nut with hypoid gear oil.

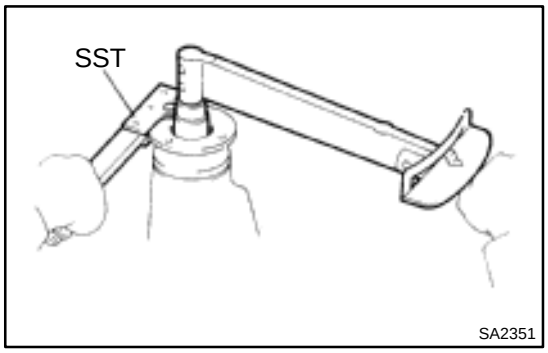

(c) Using SST to hold the flange, torque the nut.
SST 09330–00021
Torque: 108 N·m (1,100 kgf·cm, 80 ft·lbf)

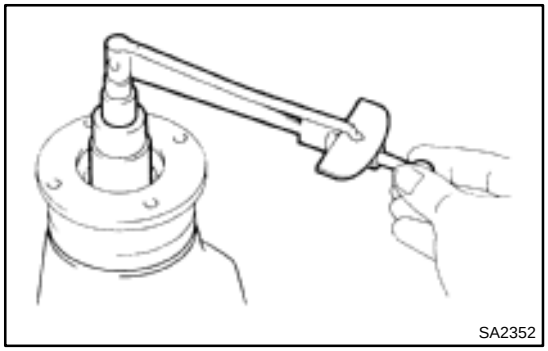

19. ADJUST DRIVE PINION PRELOAD

Using a torque wrench, measure the preload of the drive pinion using the backlash between the drive pinion and the ring gear.

Preload (at starting):
New bearing
1.2 – 1.9 N·m (12 – 19 kgf·cm, 10.4 – 16.5 in.·lbf)
Reused bearing
0.6 – 1.0 N·m (6 – 10 kgf·cm, 5.2 – 8.7 in.·lbf)

If the preload is greater than the specified value, replace the bearing spacer.

If the preload is less than the specified value, retighten the nut 13 N·m (130 kgf·cm, 9 ft·lbf) a little at a time until the specified preload is reached.

Torque: 223 N·m (2,275 kgf·cm, 165 ft·lbf) or less

If the maximum torque is exceeded while retightening the nut, replace the bearing spacer and repeat the preload adjusting procedure. Do not loosen the nut to reduce the preload.

20. INSTALL DIFFERENTIAL CASE

21. INSTALL SIDE BEARING RETAINER

(a) Remove any old FIPG material and be careful not to drop oil on the contact surfaces of the differential carrier and side bearing retainer.

(b) Clean contacting surfaces of any residual FIPG material using gasoline or alcohol.

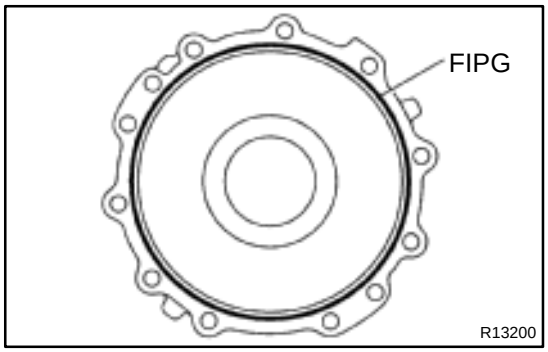

(c) Apply FIPG to the side bearing retainer, as shown.
FIPG:
Part No. 08826–00090, THREE BOND 1281 or equivalent

HINT:
Install the side bearing retainer within 10 minutes after applying FIPG.

(d) Install the side bearing retainer with the 10 bolts.
Torque: 69 N·m (700 kgf·cm, 51 ft·lbf)

22. CHECK TOTAL PRELOAD (See step 12.)

23. RECHECK RING GEAR BACKLASH
(See page SA–52)

24. RECHECK TOOTH CONTACT BETWEEN RING GEAR AND DRIVE PINION (See step 13.)

25. CHECK COMPANION FLANGE RUNOUT (See page SA–52)

26. STAKE DRIVE PINION NUT

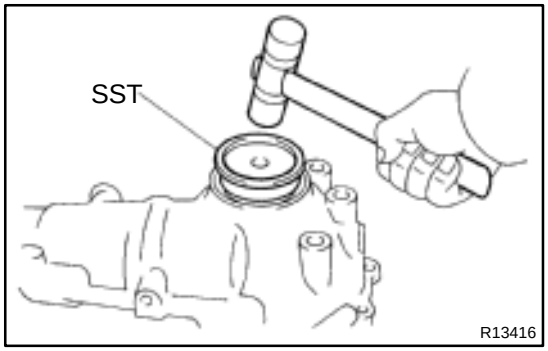

27. INSTALL SIDE OIL SEAL

(a) Using SST and a plastic hammer, install a new oil seal until its surface is flush with the differential carrier end.
SST 09608–32010

(b) Coat the oil seal lip with MP grease.

28. w/ A.D.D.:
INSTALL INTERMEDIATE SHAFT NO. 1

(a) Install a new snap ring to the shaft.

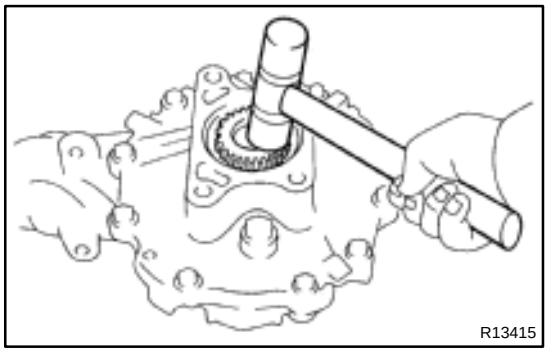

(b) Using a plastic hammer, install the shaft to the differential case.

(c) Check that there is 2 – 3 mm (0.08 – 0.12 in.) of play in the axial direction.

(d) Check that the intermediate shaft will not come out by trying to pull it completely out by hand.

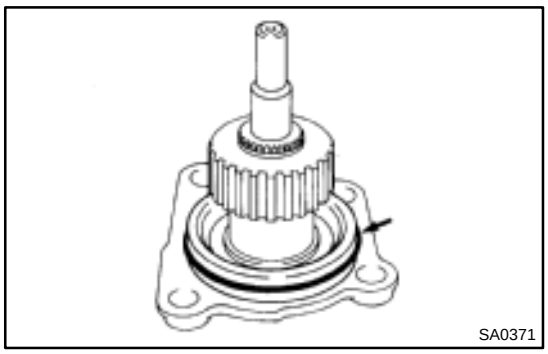
SA0371

29. w/ A.D.D.:
INSTALL CLUTCH CASE TO DIFFERENTIAL TUBE

(a) Install a new O–ring to the tube.
(b) Coat the O–ring with MP grease.
(c) Install the clutch case to the tube.
(d) Using a torx socket (E14), torque the 2 torx bolts.
Torque: 78 N·m (800 kgf·cm, 58 ft·lbf)

30. w/ A.D.D.:
INSTALL CLUTCH SLEEVE

31. INSTALL DIFFERENTIAL TUBE TO DIFFERENTIAL

(a) Remove any old FIPG material and be careful not to drop oil on the contact surfaces of the differential and clutch case.
(b) Clean surfaces with FIPG material attached to using gasoline or alcohol.

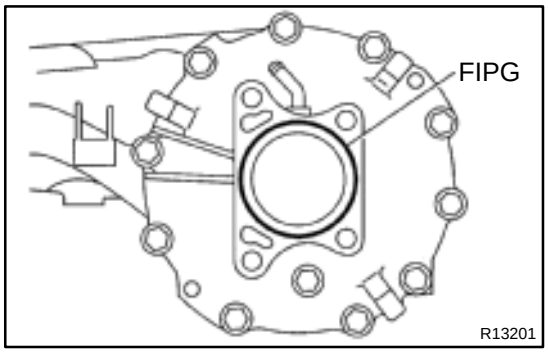

R13201

(c) Apply FIPG to the differential, as shown.
FIPG:
Part No. 08826–00090, THREE BOND 1281 or equivalent

HINT:
Install the differential tube within 10 minutes after applying FIPG.

(d) Install the differential tube to the differential.
(e) Clean the threads of the 4 bolts (w/o A.D.D.) or 2 torx bolts (w/ A.D.D.) and retainer bolt holes with toluene or trichlorethylene.

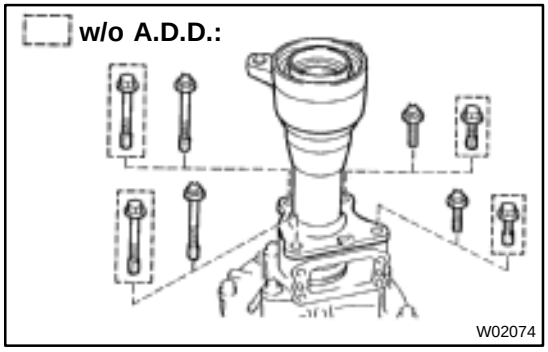

W02074

(f) Apply adhesive to 2 or 3 threads of the bolts end.
Adhesive:
Part No. 08833–00070, THREE BOND 1324 or equivalent

(g) Torque the 4 bolts (w/o A.D.D.) or 4 torx bolts (w/ A.D.D.). Torx socket E14 (Part No. 09044–00010 or locally manufactured tool).
Torque:
w/o A.D.D.: 105 N·m (1,070 kgf·cm, 77 ft·lbf)
w/ A.D.D.: 78 N·m (800 kgf·cm, 58 ft·lbf)

32. w/ A.D.D.:
INSTALL A.D.D. ACTUATOR

(a) Remove any old FIPG material and be careful not to drop oil on the contact surfaces of the actuator and clutch case.

(b) Clean contacting surfaces of any residual FIPG material using gasoline or alcohol.

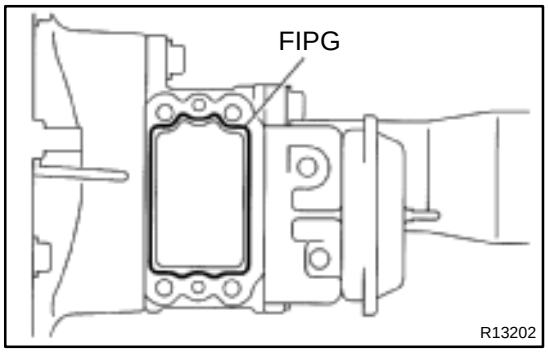

(c) Apply FIPG to the clutch case, as shown.
FIPG:
Part No. 08826–00090, THREE BOND 1281 or equivalent

HINT:
Install the actuator within 10 minutes after applying FIPG.

(d) Install the A.D.D. actuator with the 4 bolts.
Torque: 21 N·m (210 kgf·cm, 15 ft·lbf)

SA09O–02

REMOVAL

1. REMOVE UNDER COVER AND DRAIN DIFFERENTIAL OIL

2. REMOVE DRIVE SHAFTS (See page SA–38)

3. DISCONNECT FRONT PROPELLER SHAFT FROM DIFFERENTIAL (See page PR–11)

HINT:

Support the front propeller shaft securely.

4. REMOVE TUBE FROM DIFFERENTIAL

(a) w/o A.D.D.:
Disconnect the breather hose.

(b) w/ A.D.D.:
Disconnect the 2 vacuum hoses, breather hose and A.D.D. switch connector.

(c) w/o A.D.D.:
Remove the bolt and tube from the differential.
Torque: 13 N·m (130 kgf·cm, 9 ft·lbf)

(d) w/ A.D.D.:
Remove the 2 bolts and tube from the differential.
Torque: 13 N·m (130 kgf·cm, 9 ft·lbf)

5. REMOVE FRONT DIFFERENTIAL ASSEMBLY

(a) Support the front differential with a jack.

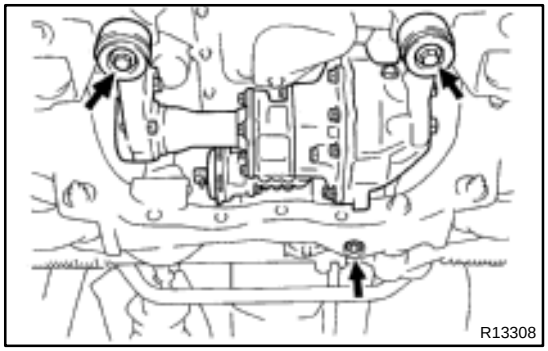

(b) Remove the rear mounting nut.
Torque: 87 N·m (890 kgf·cm, 64 ft·lbf)

(c) Remove the 2 front mounting bolts.
Torque: 137 N·m (1,400 kgf·cm, 101 ft·lbf)

(d) Lower the jack and remove the front differential assembly.

6. REMOVE DIFFERENTIAL MOUNTING CUSHIONS

(a) Remove the 2 bolts and rear mounting cushion.
Torque: 108 N·m (1,100 kgf·cm, 80 ft·lbf)

(b) Remove the 5 bolts and 2 front mounting cushions.
Torque: 157 N·m (1,600 kgf·cm, 116 ft·lbf)

SA09Q–02

REPLACEMENT

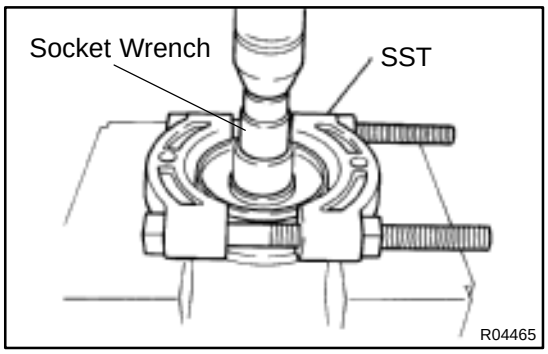

1. REPLACE COMPANION FLANGE DUST DEFLECTOR, IF NECESSARY

(a) Using SST, a socket wrench and a press, remove the dust deflector.
SST 09950–00020

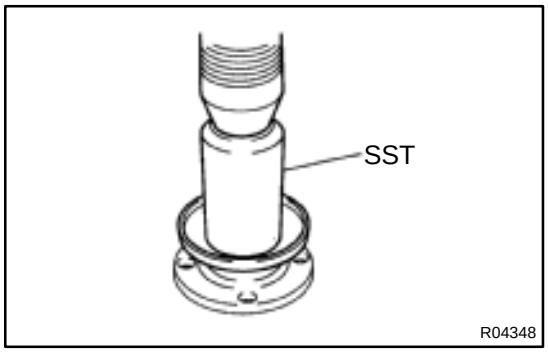

(b) Using SST and a press, install a new dust deflector.
SST 09636–20010

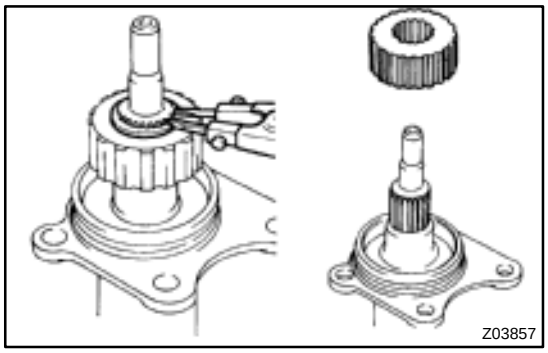

2. REPLACE INTERMEDIATE SHAFT NO. 2, IF NECESSARY

(a) w/ A.D.D.:
Remove the clutch hub.
(1) Using a snap ring expander, remove the snap ring.
(2) Remove the clutch hub from the intermediate shaft No. 2.

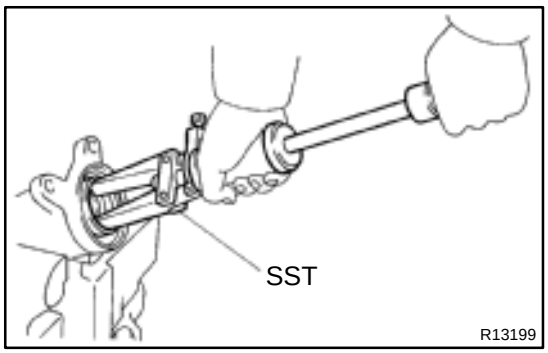

(b) Remove the oil seal.
Using SST, remove the oil seal from the tube.
SST 09308–00010

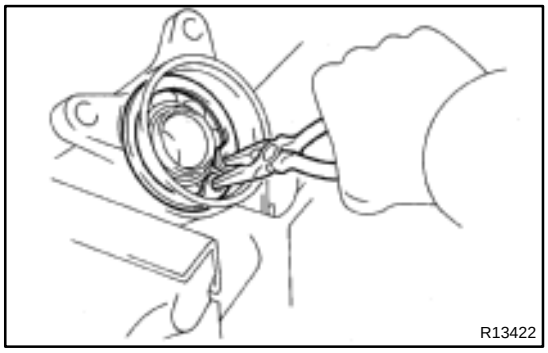

(c) Remove the intermediate shaft No. 2 from the tube.
(1) Using needle nose pliers, remove the snap ring.
(2) Remove the shaft from the tube.

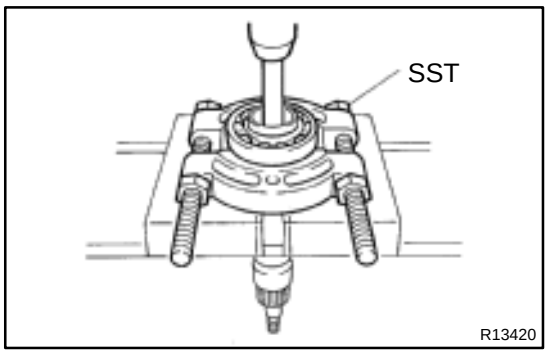

(d) Remove the intermediate shaft No. 2 bearing.
(1) Using a snap ring expander, remove the snap ring.
(2) Using SST, a brass bar and press, remove the bearing.
SST 09950–00020

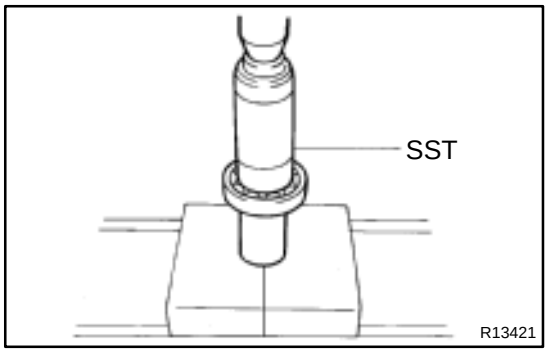

(e) Install a new intermediate shaft No. 2 bearing.
(1) Using SST and a press, install a new bearing.
SST 09309–37010
(2) Using a snap ring expander, install the snap ring.
(f) Install the intermediate shaft No. 2 to the tube.
(1) Install the shaft into the tube.
(2) Using needle nose pliers, install the snap ring.

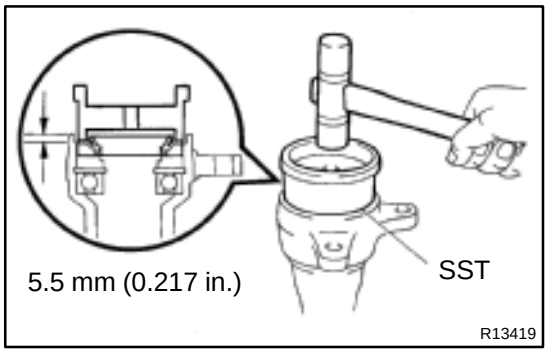

(g) Install a new oil seal.
(1) Using SST and a plastic hammer, install a new oil seal.
SST 09223–15020
Oil seal drive in depth: 5.5 mm (0.217 in.)
(2) Coat the oil seal lip with MP grease.

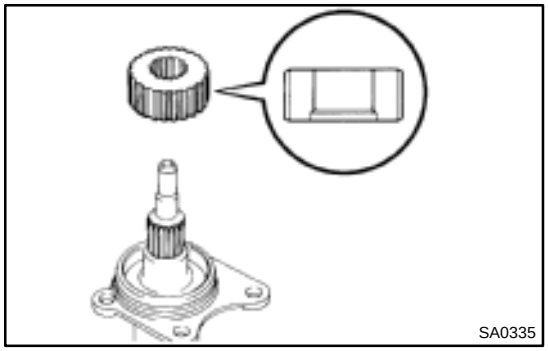

(h) w/ A.D.D.:
Install the clutch hub.
(1) Install the clutch hub to the shaft.
(2) Using snap ring expander, install the snap ring.

3. REPLACE A.D.D. ACTUATOR, IF NECESSARY

(a) Remove the A.D.D. switch and gasket.
(b) Remove the sleeve fork pin.
(1) Using a hexagon wrench, remove the screw plug.

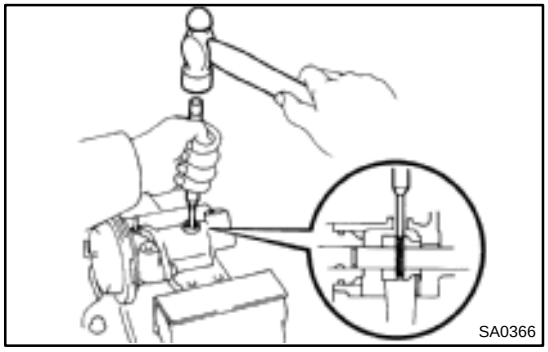

(2) Using a pin punch and hammer, remove the pin through the hole of clutch case cover.
(c) Separate A.D.D. actuator from the clutch case cover and remove the sleeve fork.
(1) Using a hexagon wrench, remove the screw plug.
(2) Remove the spring seat, spring and steel ball.
(3) Remove the 2 bolts and actuator from the clutch case cover.
(4) Separate the actuator from the clutch case cover and remove the sleeve fork.

(5) Remove the O–ring from the actuator.

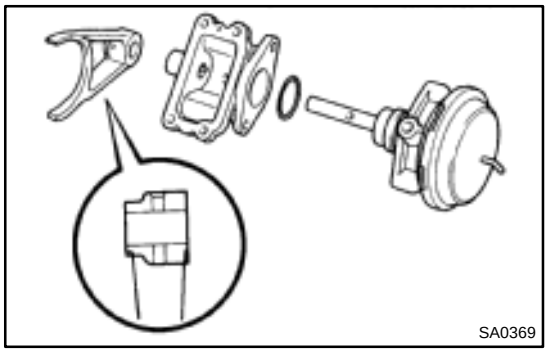
SA0369

(d) Install the sleeve fork and A.D.D. actuator into the clutch case cover.
(1) Install a new O–ring to the actuator.
(2) Coat the O–ring with MP grease.
(3) Place the sleeve fork and install the actuator to the clutch case cover.
(4) Tighten the 2 bolts.
Torque: 21 N·m (210 kgf·cm, 15 ft·lbf)
(5) Install the steel ball, spring and spring seat.
(6) Coat the threads of screw plug with FIPG.
FIPG:
Part No.08826–00090, THREE BOND 1281 or equivalent
(7) Using a hexagon wrench, install the screw plug.
Torque: 13 N·m (130 kgf·cm, 9 ft·lbf)

(e) Install the sleeve fork pin.
(1) Using a pin punch and hammer, install the pin through the hole of clutch case cover.
(2) Coat the threads of screw plug with FIPG.
FIPG:
Part No.08826–00090, THREE BOND 1281 or equivalent
(3) Using a hexagon wrench, install the screw plug.
Torque: 20 N·m (200 kgf·cm, 14 ft·lbf)

(f) Install the A.D.D. switch.
Install a new gasket and A.D.D. switch.
Torque: 40 N·m (410 kgf·cm, 30 ft·lbf)

FRONT DIFFERENTIAL REAR OIL SEAL (4WD)

SA09L–02

COMPONENTS

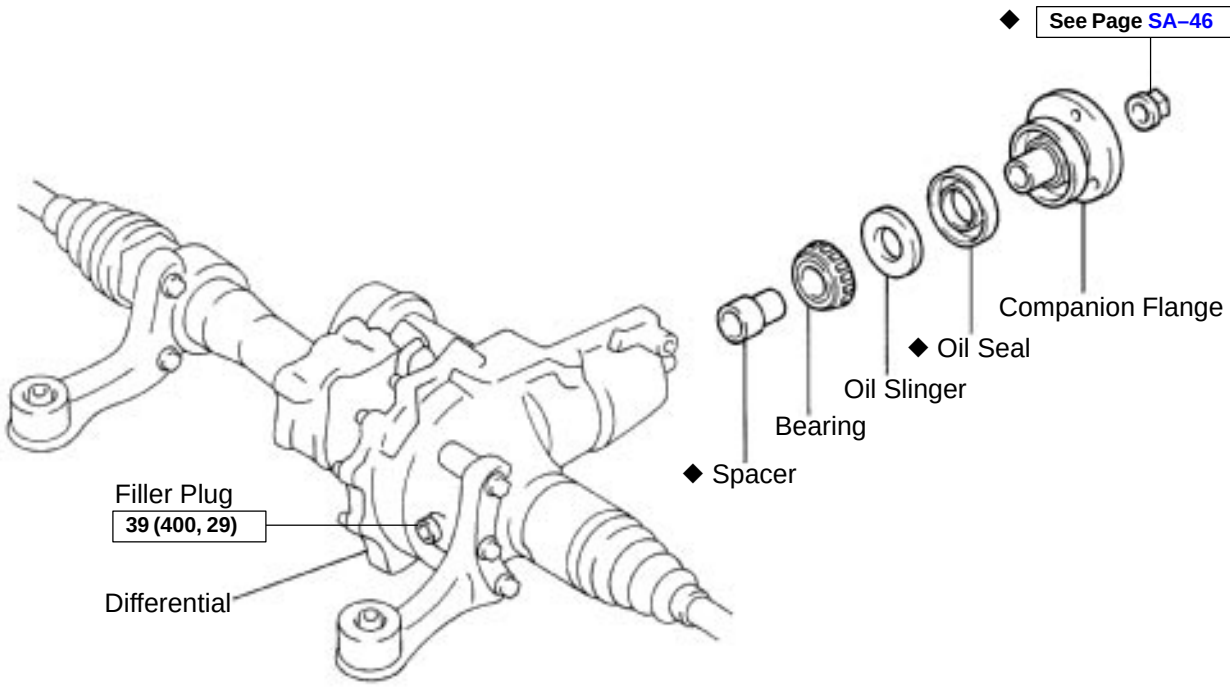

N·m (kgf·cm, ft·lbf) : Specified torque
◆ Non–reusable part

R13389

SA09M–02

REPLACEMENT

1. REMOVE UNDER COVER

2. REMOVE FRONT PROPELLER SHAFT
(See page PR–11)

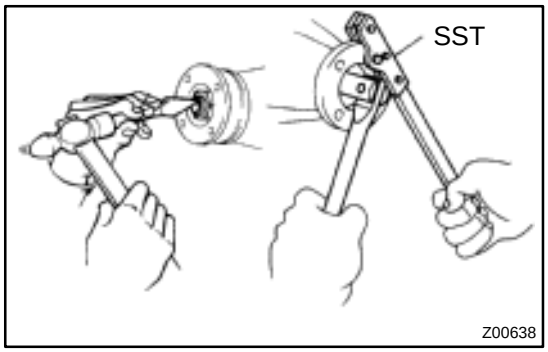

3. REMOVE COMPANION FLANGE

(a) Using a chisel and hammer, unstake the nut.

(b) Using SST to hold the flange, remove the nut.
SST 09330–00021

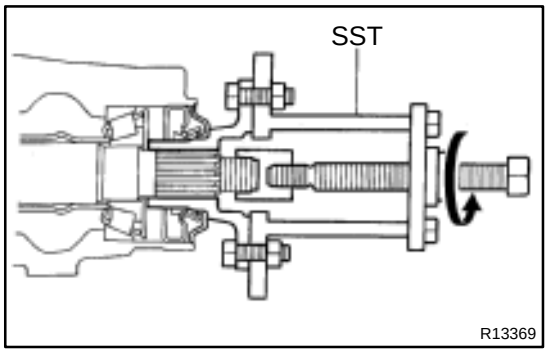

(c) Using SST, remove the companion flange.
SST 09950–30011 (09951–03010, 09953–03010, 09954–03010, 09955–03030, 09956–03020)

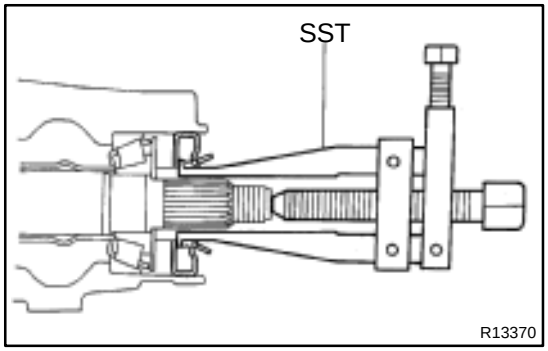

4. REMOVE OIL SEAL AND OIL SLINGER

(a) Using SST, remove the oil seal.
SST 09350–32014 (09308–10010)

(b) Remove the oil slinger.

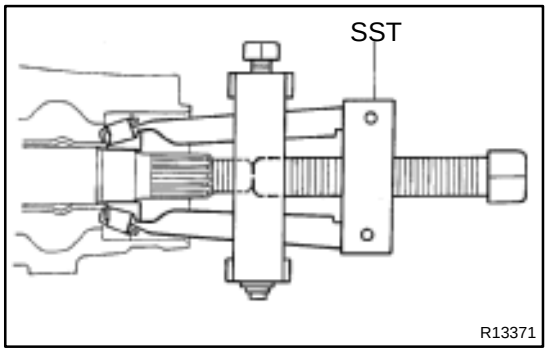

5. REMOVE REAR BEARING AND BEARING SPACER

(a) Using SST, remove the rear bearing from the drive pinion.
SST 09556–22010

(b) Remove the bearing spacer.

6. INSTALL BEARING SPACER, REAR BEARING AND OIL SLINGER

(a) Install a new bearing spacer and place the rear bearing and oil slinger.

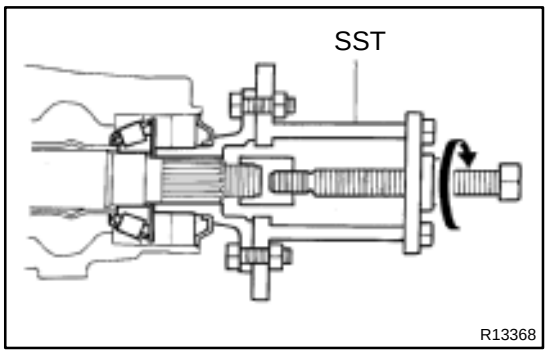

(b) Using SST and the companion flange, install the rear bearing, then remove the companion flange.
SST 09950–30011 (09951–03010, 09953–03010, 09954–03010, 09955–03030, 09956–03020)

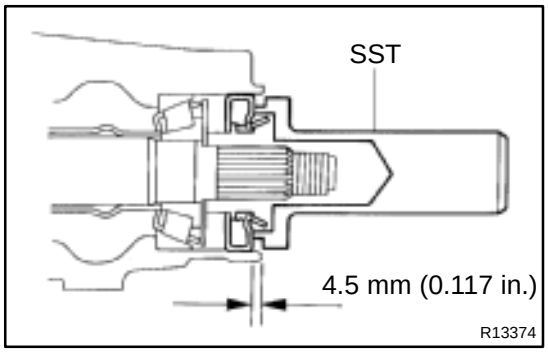

7. INSTALL OIL SEAL

(a) Coat a new oil seal lip with MP grease.

(b) Using SST and a hammer, install the oil seal.
SST 09554–22010
Oil seal drive in depth: 4.5 mm (0.177 in.)

8. INSTALL COMPANION FLANGE

(a) Place the companion flange on the drive pinion.

(b) Coat the threads of a new nut with hypoid gear oil.

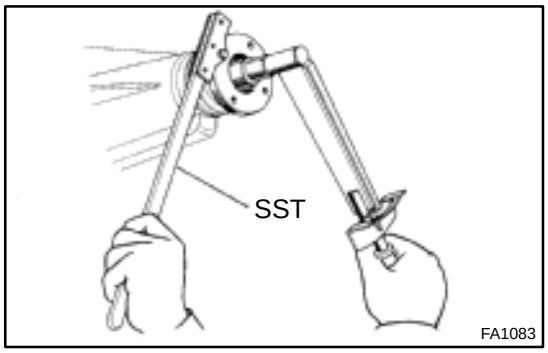

(c) Using SST to hold the flange, torque the nut.
SST 09330–00021
Torque: 108 N·m (1,100 kgf·cm, 80 ft·lbf)

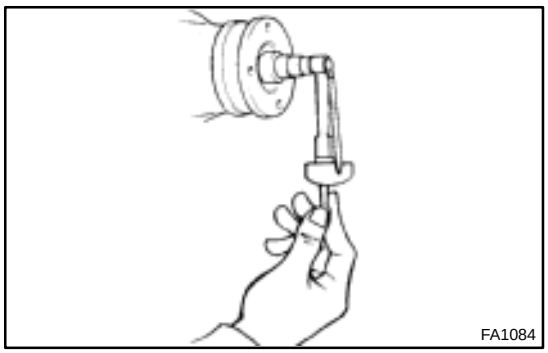

9. ADJUST DRIVE PINION PRELOAD

Using a torque wrench, measure the preload of the drive pinion using the backlash between the drive pinion and ring gear.

Preload (at starting):
0.6 – 1.0 N·m (6 – 10 kgf·cm, 5.2 – 8.7 in.·lbf)

If the preload is greater than the specified value, replace the bearing spacer.

If the preload is less than the specified value, retighten the nut 13 N·m (130 kgf·cm, 9 ft·lbf) a little at a time until the specified preload is reached.

Torque: 223 N·m (2,275 kgf·cm, 165 ft·lbf) or less

If the maximum torque is exceeded while retightening the nut, replace the bearing spacer and repeat the preload adjusting procedure. Do not back off the pinion nut to reduce the preload.

10. STAKE DRIVE PINION NUT

11. INSTALL FRONT PROPELLER SHAFT
(See page PR–16)

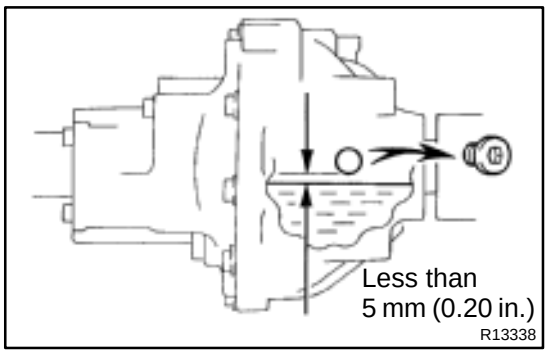

12. FILL DIFFERENTIAL WITH HYPOID GEAR OIL
Torque: 39 N·m (400 kgf·cm, 29 ft·lbf)
w/o A.D.D.:
Oil type: Hypoid gear oil API GL–5
Recommended oil viscosity:
Above –18˚C (0˚F) SAE 90
Below –18˚C (0˚F) SAE 80W or 80W–90
Capacity: 1.10 liters (1.16 US qts, 0.97 Imp. qts)
w/ A.D.D.:
Oil type: Hypoid gear oil API GL–5
Recommended oil viscosity: SAE 75W–90
Capacity: 1.15 liters (1.22 US qts, 1.01 Imp. qts)

13. INSTALL UNDER COVER

FRONT DRIVE SHAFT (4WD)

COMPONENTS

SA09G–02

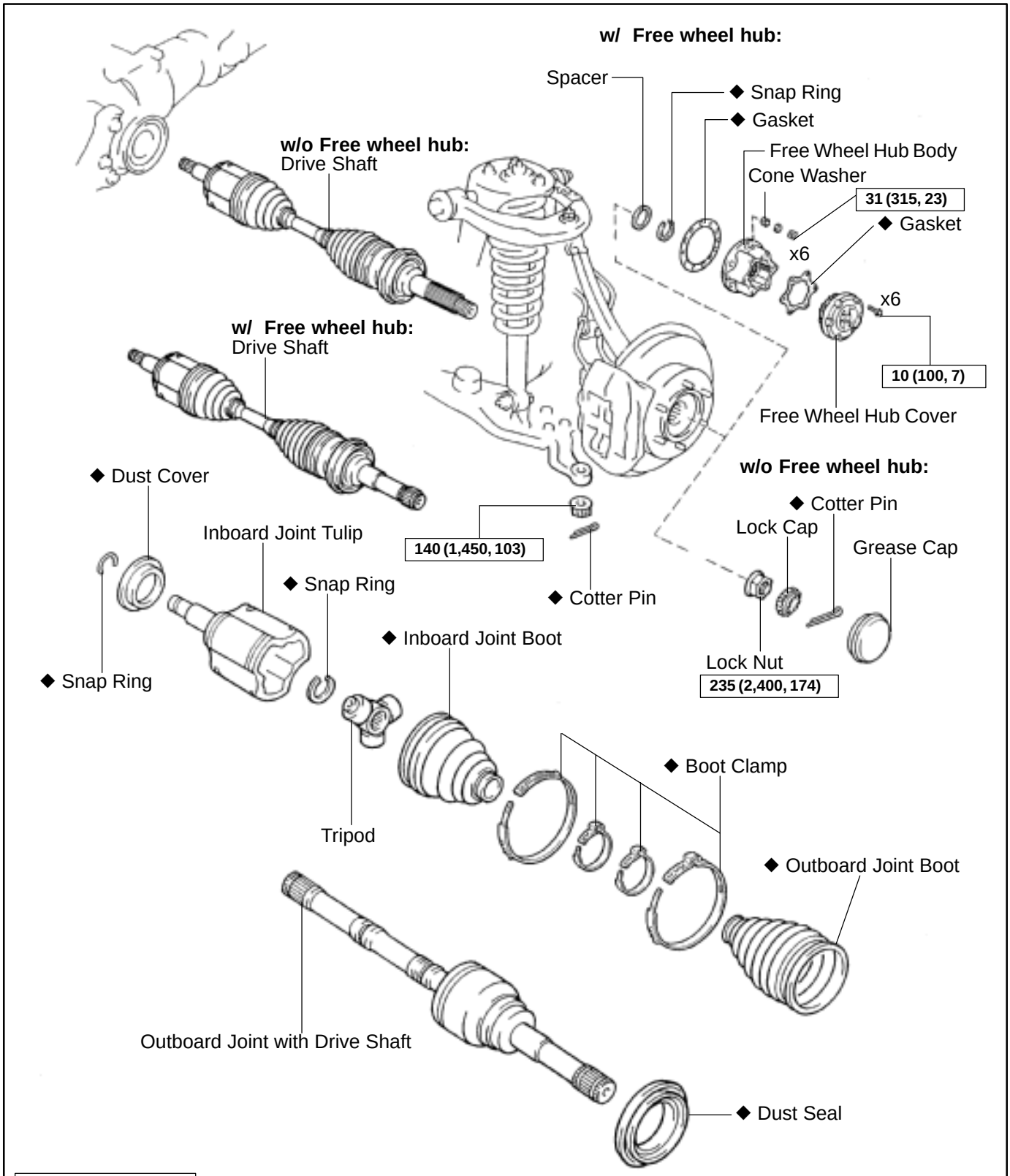

N·m (kgf·cm, ft·lbf) : Specified torque
◆ Non–reusable part

F01730

SA09I–02

DISASSEMBLY

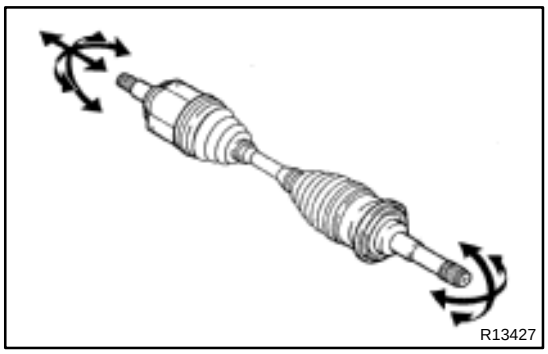

1. CHECK DRIVE SHAFT

(a) Check to see that there is no play in the inboard and outboard joints.
(b) Check to see that the inboard joint slides smoothly in the thrust direction.
(c) Check to see that there is no significant play in the radial direction of the inboard joint.
(d) Check the boot for damage.

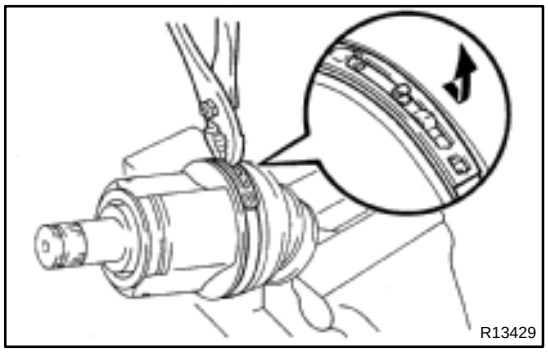

2. REMOVE INBOARD JOINT BOOT CLAMPS

(a) Using pliers, draw the hooks together and remove the large clamp.
(b) Using a side cutter, cut the small boot clamp.
(c) Slide the inboard joint boot toward the outboard joint.

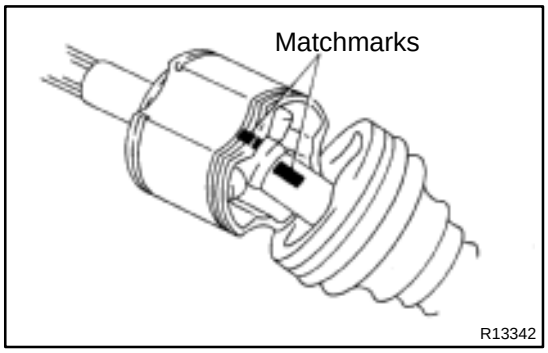

3. REMOVE INBOARD JOINT TULIP

(a) Place matchmarks on the inboard joint and drive shaft.
(b) Remove the inboard joint tulip from the drive shaft.

4. REMOVE TRIPOD JOINT FROM DRIVE SHAFT

(a) Using a snap ring expander, remove the snap ring.

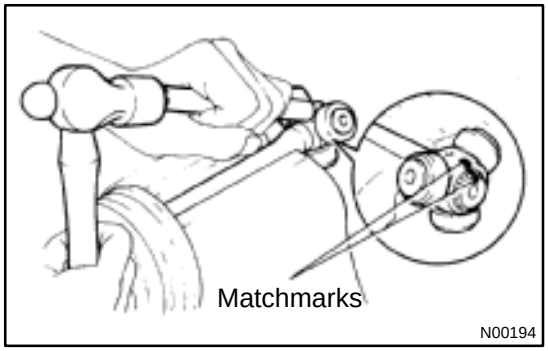

(b) Place matchmarks on the shaft and tripod.
(c) Using a brass bar and hammer, remove the tripod joint.

NOTICE:

Do not tap the roller.

5. REMOVE INBOARD AND OUTBOARD JOINT BOOTS

(a) Remove the inboard joint boot from the drive shaft.
(b) Using a side cutter, cut the outboard boot clamps.
(c) Remove the outboard joint boot from the drive shaft.

NOTICE:

Do not disassemble the outboard joint.

6. REMOVE DUST COVER

Using a screwdriver, remove the dust cover from the inboard joint tulip.

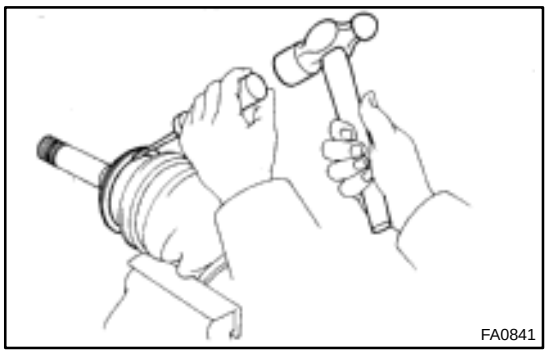

7. REMOVE DUST SEAL

Using a screwdriver and hammer, remove the dust seal from the drive shaft.

SA09K–02

INSTALLATION

Installation is in the reverse order of removal (See page SA–38).

HINT:

After installation, fill the differential with hypoid gear oil (See page SA–46).

SA09J–02

REASSEMBLY

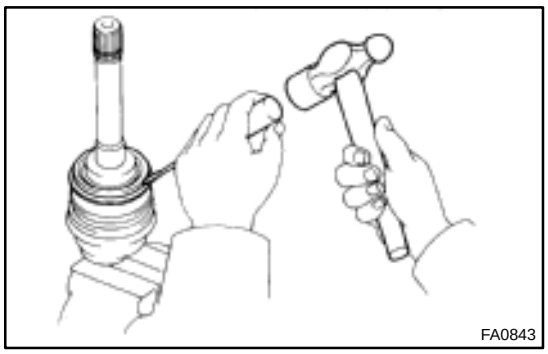

1. INSTALL DUST COVER

Using a screwdriver and hammer, install a new dust cover.

2. INSTALL DUST SEAL

Using a screwdriver and hammer, install a new dust seal.

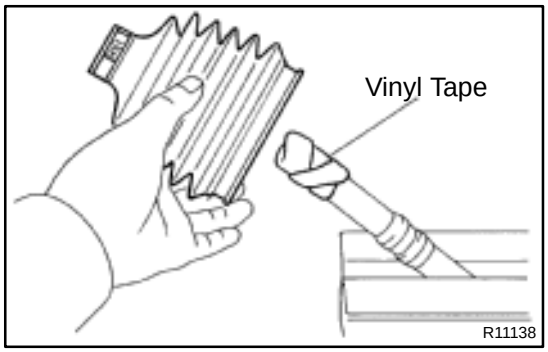

3. TEMPORARILY INSTALL NEW BOOTS TO DRIVE SHAFT

HINT:

- Before installing the boots, wrap vinyl tape around the spline of the shaft to prevent damaging the boot.
- Place new clamps to boot's small ends and install the boots to the drive shaft.

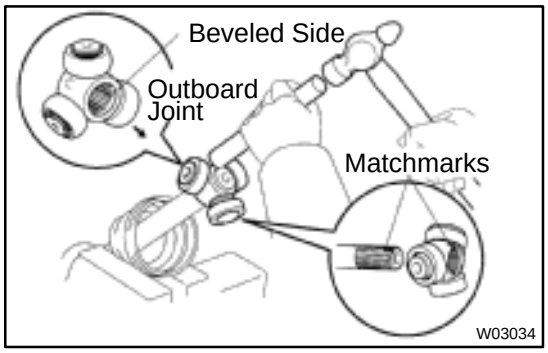

4. ASSEMBLE TRIPOD JOINT

(a) Place the beveled side of the tripod axial spline toward the outboard joint.

(b) Align the matchmarks placed before removal.

(c) Using a brass bar and hammer, install the tripod onto the drive shaft.

NOTICE:

Do not tap the roller.

(d) Using a snap ring expander, install a new snap ring.

5. ASSEMBLE BOOT TO OUTBOARD JOINT

Before assembling the boot, pack the outboard joint and boot with grease in the boot kit.

Grease capacity: (Color = Black)
215 – 235 g (7.58 – 8.29 oz.)

6. ASSEMBLE BOOT AND INBOARD JOINT TULIP

(a) Pack the inboard joint and boot with grease in the boot kit.
Grease capacity: (Color = Yellow ocher)
230 – 250 g (8.11 – 8.82 oz.)

(b) Align the matchmarks placed before removal, install the inboard joint tulip to the drive shaft.

(c) Temporarily install the boot to the inboard joint tulip.

7. ASSEMBLE BOOT CLAMPS TO BOTH BOOTS

(a) Make sure that the boots are in the shaft groove.

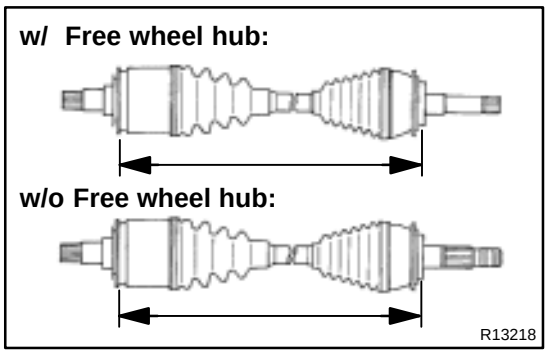

(b) Make sure that the boots are not stretched or contracted when the drive shaft is at standard length.
Drive shaft standard length:
436.2 ± 2.0 mm (17.173 ± 0.079 in.)

(c) Place a new inboard joint large boot clamp.

(d) Holding the clamp near the closing hooks, position the holes in the clamp's free end over the closing hooks with pliers.

(e) Secure clamps by drawing the closing hooks together.

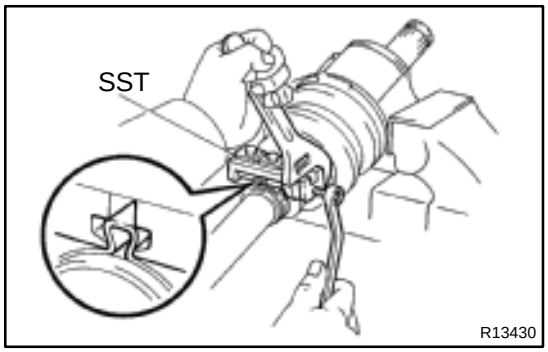

(f) To assemble the other boot clamps, pinch the clamps and adjust clearance with SST.

NOTICE:
Do not overtighten the SST.

SST 09521–24010

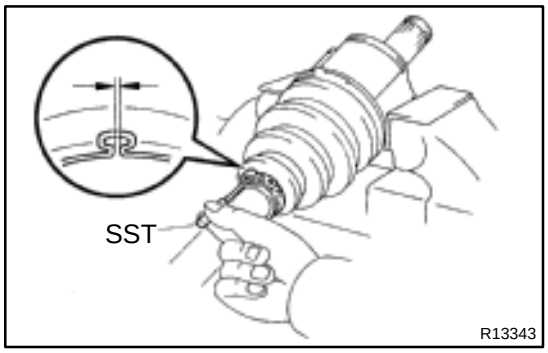

(g) Measure the clearance of the boot clamps with SST.
SST 09240–00020
Clearance: 1.0 – 1.5 mm (0.039 – 0.059 in.)

8. CHECK DRIVE SHAFT (See page SA–40)

SA09H–02

REMOVAL

1. REMOVE FRONT WHEEL
Torque: 110 N·m (1,150 kgf·cm, 83 ft·lbf)

2. DRAIN DIFFERENTIAL OIL

3. w/o Free wheel hub:
REMOVE DRIVE SHAFT LOCK NUT

(a) Using a screwdriver, remove the grease cap.
(b) Remove the cotter pin and lock cap.

HINT:
At the time of installation, if the holes for the cotter pin are not aligned, tighten the nut further up to 60°.

(c) With applying the brakes, remove the lock nut.
Torque: 235 N·m (2,400 kgf·cm, 174 ft·lbf)

4. w/ Free wheel hub:
REMOVE FREE WHEEL HUB

(a) Remove the free wheel hub (See page SA–32).

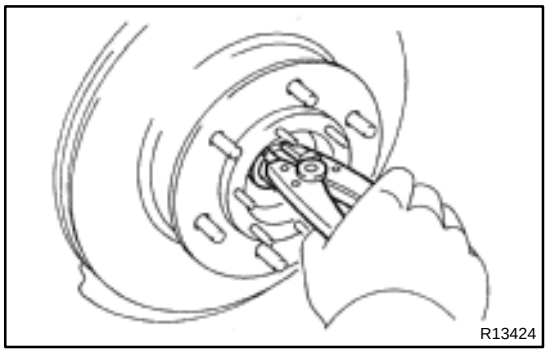

(b) Using a snap ring expander, remove the snap ring.
(c) Remove the spacer.

Removal:



Installation:

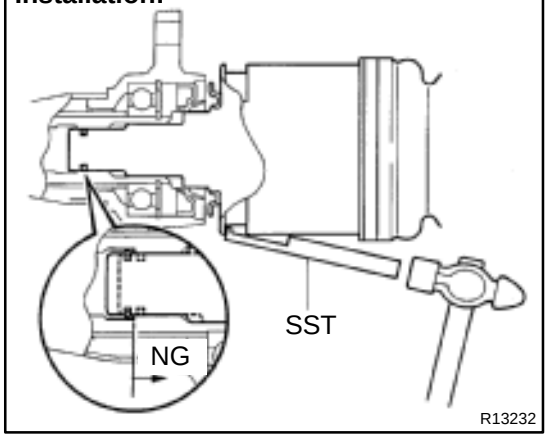

5. DISCONNECT DRIVE SHAFT

(a) Using a brass bar and hammer, disconnect the drive shaft.

HINT:
When it is difficult to disconnect the drive shaft, tap in a screwdriver between differential tube/differential carrier and drive shaft.

HINT:
At the time of installation, please refer to the following items.

- Before installation, set the snap ring opening side facing downward.
- Using SST and a hammer, strike the inboard joint into the differential. At that time, strike the snags evenly to avoid snags deformation.
  SST 09631–10030
- After installation, check that the drive shaft cannot be pulled out by hand.

NOTICE:
Be careful not to damage the dust cover of the drive shaft.

(b) Using a screwdriver, remove the snap ring from the inboard joint tulip.

6. DISCONNECT LOWER SUSPENSION ARM

(a) Remove the cotter pin and nut.

Torque: 140 N·m (1,450 kgf·cm, 103 ft·lbf)

HINT:

At the time of installation, if the holes for the cotter pin are not aligned, tighten the nut further up to 60°.

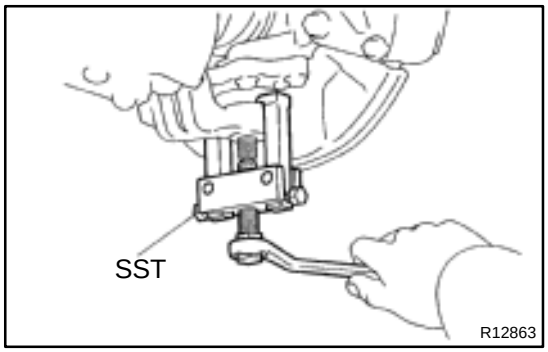

(b) Using SST, disconnect the lower suspension arm.
SST 09628–62011

HINT:

At the time of installation, face the cotter pin hole of the lower ball joint forward.

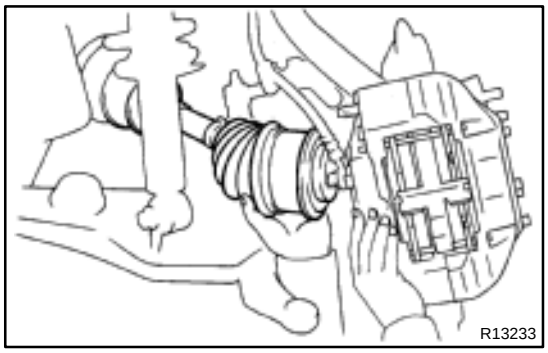

7. REMOVE DRIVE SHAFT

Push the steering knuckle outward and remove the drive shaft.

HINT:

When it is difficult to disconnect the drive shaft, tap the drive shaft with a plastic hammer.

NOTICE:

Be careful not to damage the oil seal, boots and dust seal.

SA0AX–03

COMPONENTS

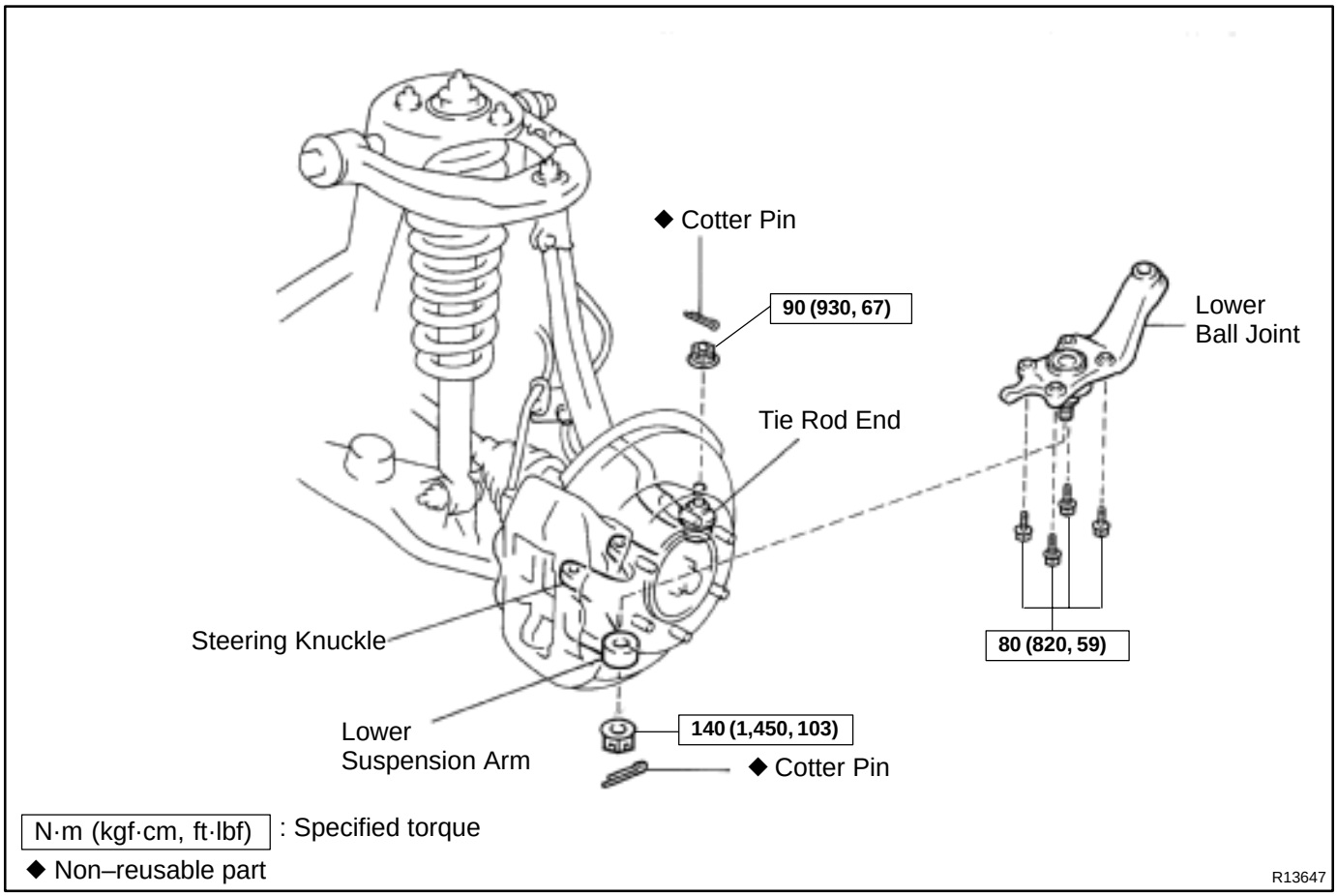

N·m (kgf·cm, ft·lbf) : Specified torque

◆ Non–reusable part

R13647

SA0AZ–02

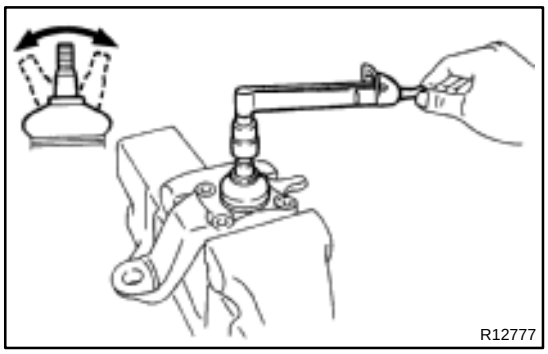

INSPECTION

INSPECT LOWER BALL JOINT FOR ROTATION CONDITION

(a) As shown in the illustration, flip the ball joint stud back and forth 5 times before installing the nut.

(b) Using a torque wrench, turn the nut continuously 1 turn each 2 – 4 seconds and take the torque reading on the 5th turn.

Turning torque:
0.1 – 2.5 N·m (1 – 25 kgf·cm, 1 – 22 in.·lbf)

SA0B0–02

INSTALLATION

Installation is in the reverse order of removal (See page SA–121).

HINT:

After installation, check the front wheel alignment (See page SA–9).

FRONT LOWER BALL JOINT (4WD and PRE RUNNER)

SA0AW–02

ON–VEHICLE INSPECTION

HINT:

Pre runner is the model described below.

RZN191L–TRPDKAB, RZN196L–CRPDKAB, VZN195L–CRPDKAB

INSPECT LOWER BALL JOINT EXCESSIVE PLAY ON–VEHICLE

(a) Remove the front wheel and install the hub nuts to the disc.

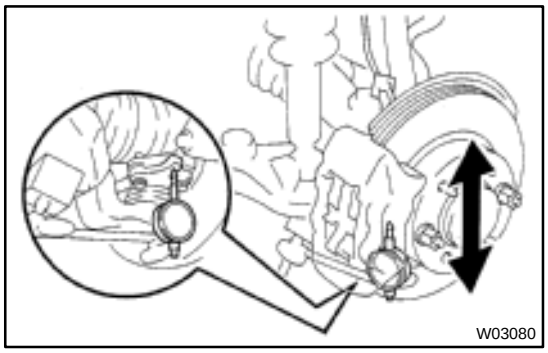

(b) Using a dial indicator, check the lower ball joint for excessive play when you push the hub nuts up and down with a force of 294 N (30 kgf, 66 lbf).
Maximum: 0.5 mm (0.020 in.)

SA0AY–02

REMOVAL

1. REMOVE FRONT WHEEL

Torque: 110 N·m (1,150 kgf·cm, 83 ft·lbf)

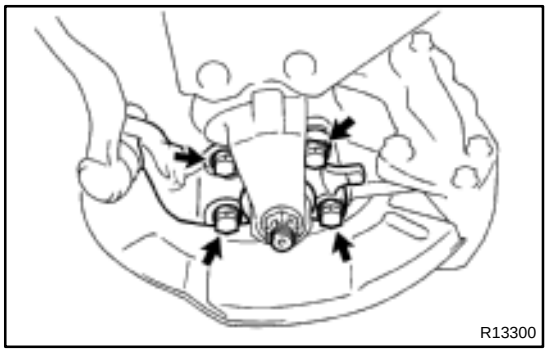

2. DISCONNECT TIE ROD END

(a) Loosen the 4 bolts.

Torque: 80 N·m (820 kgf·cm, 59 ft·lbf)

HINT:

Do not remove the bolts.

(b) Remove the cotter pin and nut from the tie rod end.

Torque: 90 N·m (930 kgf·cm, 67 ft·lbf)

HINT:

At the time of installation, if the holes for the cotter pin are not aligned, tighten the nut further up to 60°.

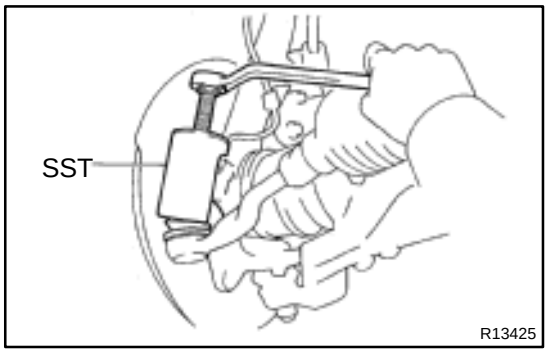

(c) Using SST, disconnect the tie rod end from the steering knuckle.

SST 09610–20012

3. REMOVE LOWER BALL JOINT

(a) Remove the cotter pin and nut from the lower ball joint.

Torque: 140 N·m (1,450 kgf·cm, 103 ft·lbf)

HINT:

At the time of installation, if the holes for the cotter pin are not aligned, tighten the nut further up to 60°.

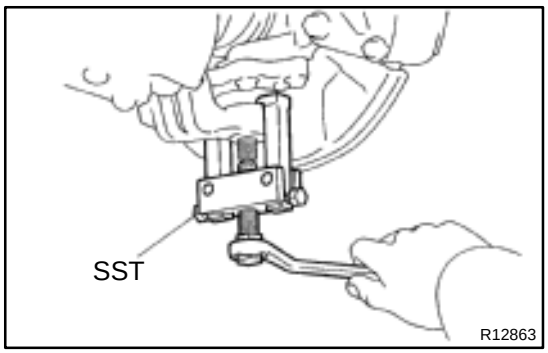

(b) Using SST, disconnect the lower ball joint from the lower suspension arm.

SST 09628–62011

HINT:

At the time of installation, face the cotter pin hole of the lower ball joint forward.

(c) Remove the 4 bolts.

(d) With lifting the upper suspension arm and steering knuckle, remove the lower ball joint.

HINT:

At the time of installation, after removing the lower ball joint, support the upper suspension arm and steering knuckle securely.

FRONT LOWER SUSPENSION ARM (4WD and PRE RUNNER)

SA0AJ–03

COMPONENTS

HINT:

Pre runner is the model described below.

RZN191L–TRPDKAB, RZN196L–CRPDKAB, VZN195L–CRPDKAB

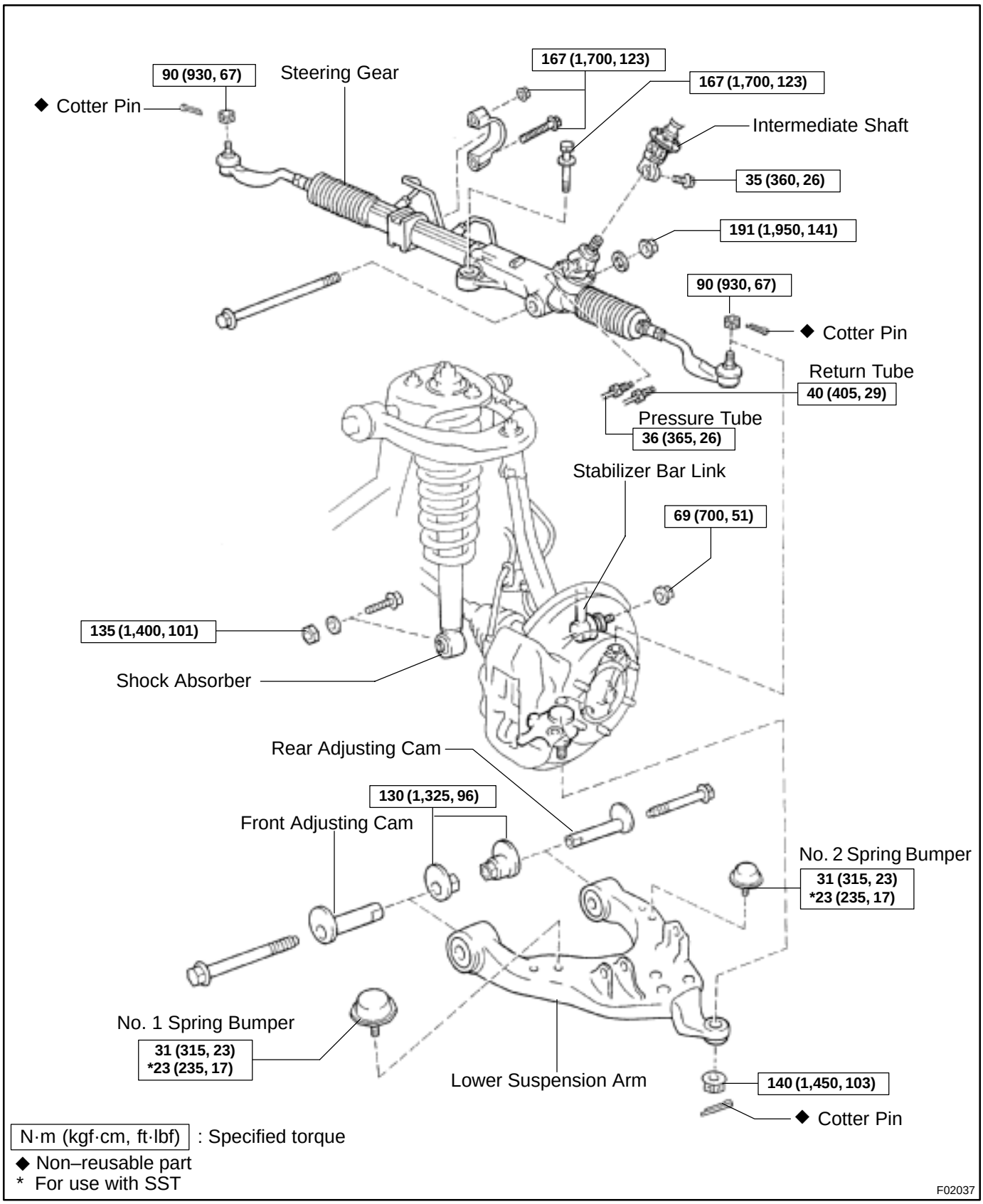

N·m (kgf·cm, ft·lbf) : Specified torque
◆ Non–reusable part
* For use with SST

F02037

SA0AL–02

INSTALLATION

Installation is in the reverse order of removal (See page SA–105).

HINT:

After installation, check the front wheel alignment (See page SA–9).

SA1G9–01

REMOVAL

1. REMOVE FRONT WHEEL

Torque: 110 N·m (1,150 kgf·cm, 83 ft·lbf)

2. REMOVE STEERING GEAR ASSEMBLY

Manual steering: See page SR–60

Power steering (2WD): See page SR–74

Power steering (4WD and pre runner): See page SR–93

3. DISCONNECT STABILIZER BAR LINK

Remove the nut and disconnect the stabilizer bar link from the lower suspension arm.

Torque: 69 N·m (700 kgf·cm, 51 ft·lbf)

4. DISCONNECT SHOCK ABSORBER

(a) Remove the shock absorber lower nut and washer.

Torque: 135 N·m (1,400 kgf·cm, 101 ft·lbf)

HINT:

At the time of installation, after stabilizing the suspension, torque the nut.

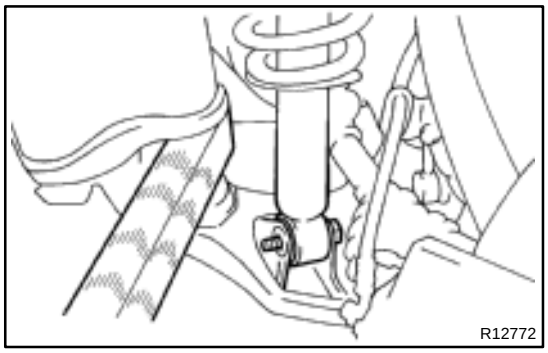

(b) With lowering the lower suspension arm, remove the bolt and disconnect the shock absorber.

5. DISCONNECT LOWER BALL JOINT

(a) Support the upper suspension arm and steering knuckle securely.

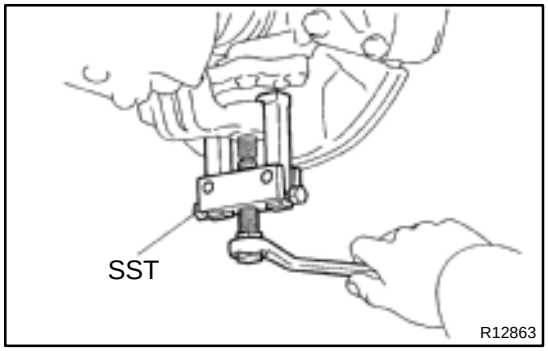

(b) Remove the cotter pin and nut from the lower ball joint.

Torque: 140 N·m (1,450 kgf·cm, 103 ft·lbf)

HINT:

At the time of installation, if the holes for the cotter pin are not aligned, tighten the nut further up to 60°.

(c) Using SST, disconnect the lower ball joint from the lower suspension arm.

SST 09628–62011

NOTICE:

Be careful not to damage the lower ball joint.

HINT:

At the time of installation, face the cotter pin hole of the lower ball joint forward.

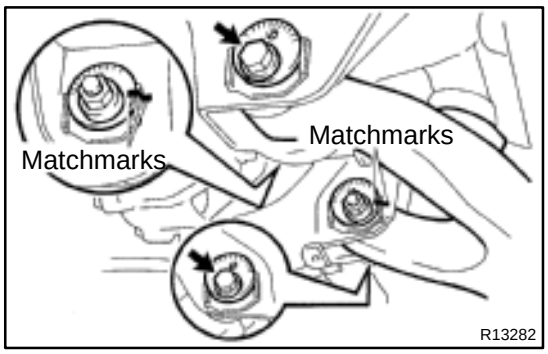

6. REMOVE LOWER SUSPENSION ARM

(a) Place matchmarks on the front and rear adjusting cams.

(b) Remove the nuts, adjusting cams, bolt and lower suspension arm.

Torque: 130 N·m (1,325 kgf·cm, 96 ft·lbf)

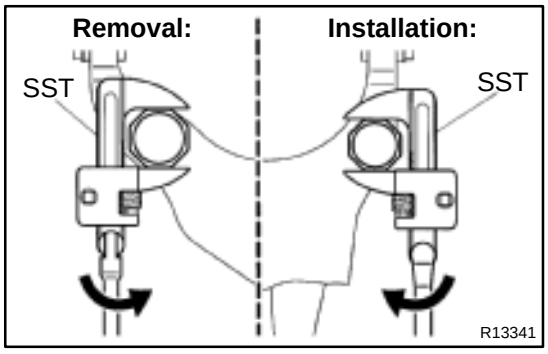

7. REMOVE NO. 1 AND NO. 2 SPRING BUMPERS

Using SST, remove the No. 1 and No. 2 spring bumpers.

SST 09922–10010

Torque: 23 N·m (235 kgf·cm, 17 ft·lbf)

HINT:

At the time of installation, use a torque wrench with a fulcrum length of 345 mm (13.58 in.).

FRONT SHOCK ABSORBER (4WD and PRE RUNNER)

SA09Z–03

COMPONENTS

HINT:

Pre runner is the model described below.

RZN191L–TRPDKAB, RZN196L–CRPDKAB, VZN195L–CRPDKAB

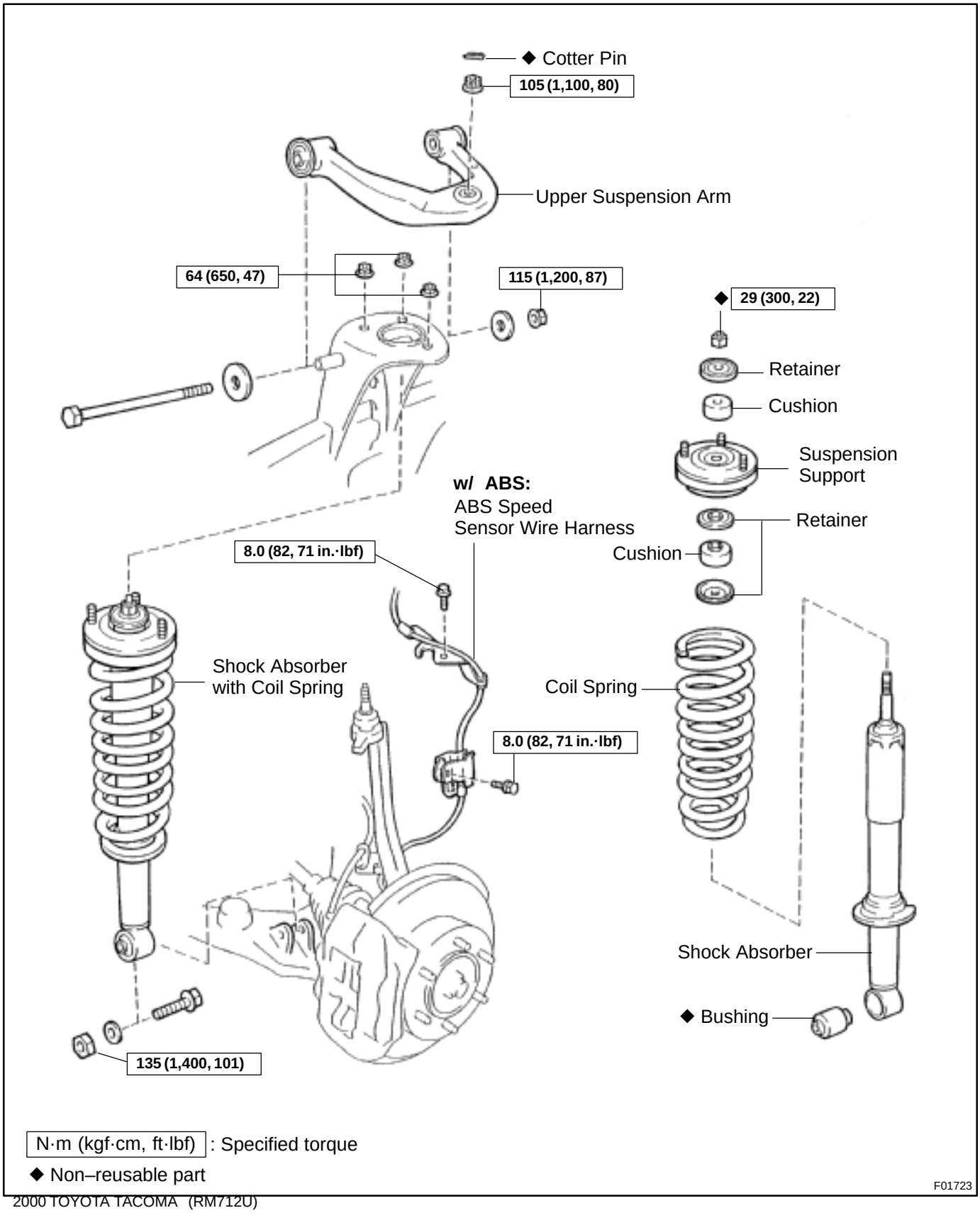

N·m (kgf·cm, ft·lbf) : Specified torque

◆ Non–reusable part

F01723

SA0A1–02

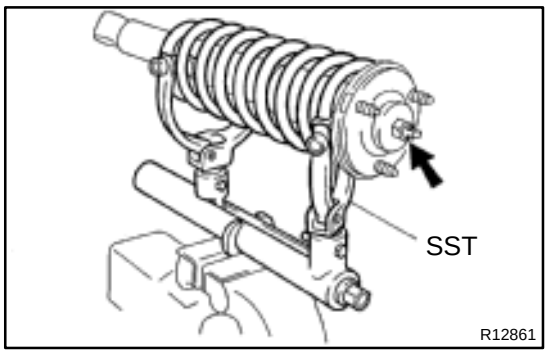

DISASSEMBLY

REMOVE SUSPENSION SUPPORT AND COIL SPRING

(a) Using SST, compress the coil spring until there is a clearance on both ends.
SST 09727–30021

NOTICE:

- **To avoid damage to SST, set SST arms to allow clearance to hold a 8–roll coil between them.**
- **Do not compress the coil spring more than necessary.**
- **Do not use an impact wrench. It will damage the SST.**

(b) Remove suspension support center nut.

(c) Remove the 3 retainers, 2 cushions, suspension support and coil spring.

SA0A3–02

DISPOSAL

1. FULLY EXTEND SHOCK ABSORBER ROD

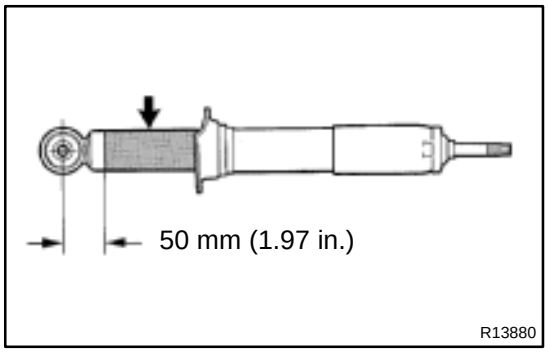

2. DRILL HOLE TO DISCHARGE GAS FROM CYLINDER

Using a drill, make a hole in the cylinder as shown in the illustration to discharge the gas inside.

CAUTION:

The discharged gas is harmless, but be careful of chips which may fly up when drilling.

SA0A2–02

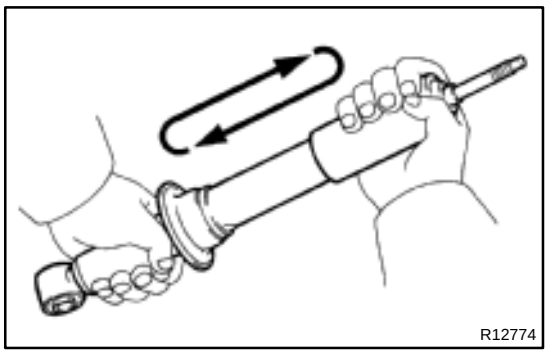

INSPECTION

INSPECT SHOCK ABSORBER

Compress and extend the shock absorber rod and check that there is no abnormal resistance or unusual operation sounds. If there is any abnormality, replace the shock absorber with a new one.

NOTICE:

When discarding the shock absorber, see DISPOSAL on page SA–83.

SA0A6–02

INSTALLATION

Installation is in the reverse order of removal (See page SA–80).

SA0A5–02

REASSEMBLY

1. INSTALL COIL SPRING TO SHOCK ABSORBER

(a) Using SST, compress the coil spring.
SST 09727–30021

NOTICE:

- **To avoid damage to SST, set SST arms to allow clearance to hold a 8–roll coil between them.**
- **Do not compress the coil spring more than necessary.**
- **Do not use an impact wrench. It will damage the SST.**

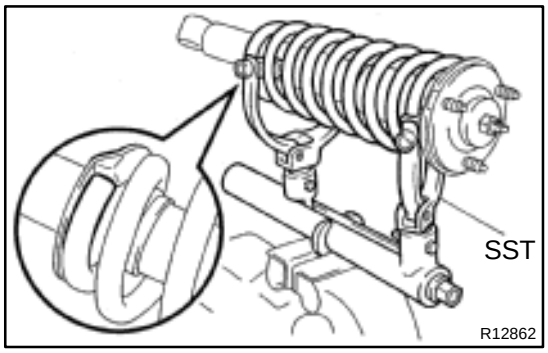

(b) Install the coil spring to the shock absorber.

HINT:

Fit the lower end of the coil spring into the gap of the spring seat of the shock absorber.

2. INSTALL SUSPENSION SUPPORT

(a) Install the 2 cushions, 3 retainers and suspension support to the rod.

(b) Temporarily tighten a new suspension support center nut.

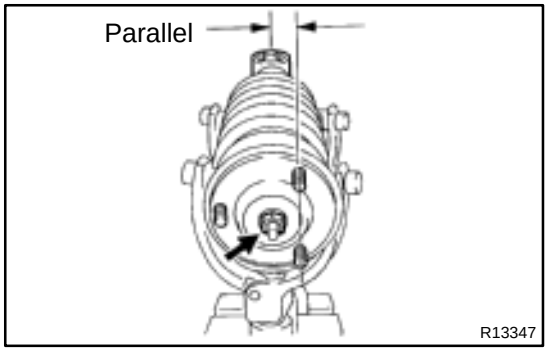

(c) Position the suspension support so that a line drawn between the 2 bolts would be parallel to the direction of the lower bushing.

(d) Remove the SST.
SST 09727–30021

HINT:

After removing the SST, again check the direction of the suspension support.

(e) Torque the suspension center nut.
Torque: 29 N·m (300 kgf·cm, 22 ft·lbf)

SA0A0–02

REMOVAL

1. REMOVE FRONT WHEEL

Torque: 110 N·m (1,150 kgf·cm, 83 ft·lbf)

2. DISCONNECT SHOCK ABSORBER FROM LOWER SUSPENSION ARM

(a) Remove the shock absorber lower nut and washer.

NOTICE:

Do not remove the bolt.

Torque: 135 N·m (1,400 kgf·cm, 101 ft·lbf)

HINT:

At the time of installation, after stabilizing the suspension, torque the nut.

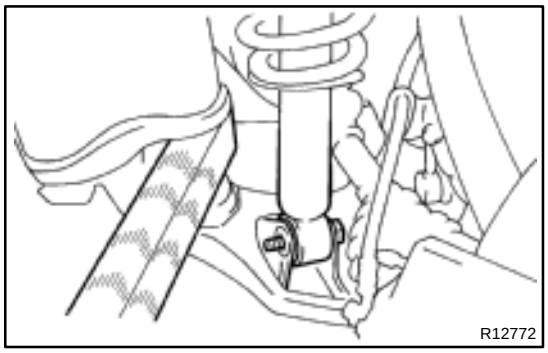

(b) With lowering the lower suspension arm, remove the bolt and disconnect the shock absorber.

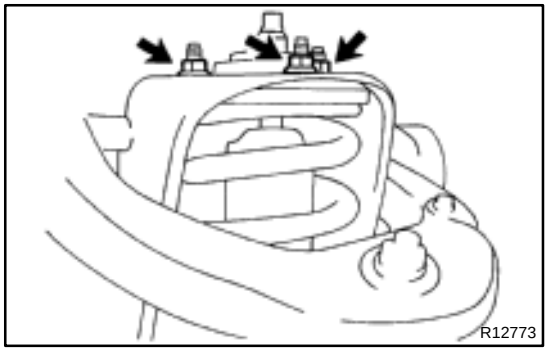

3. REMOVE SHOCK ABSORBER WITH COIL SPRING

Remove the 3 nuts and shock absorber with the coil spring.

Torque: 64 N·m (650 kgf·cm, 47 ft·lbf)

SA0A4–02

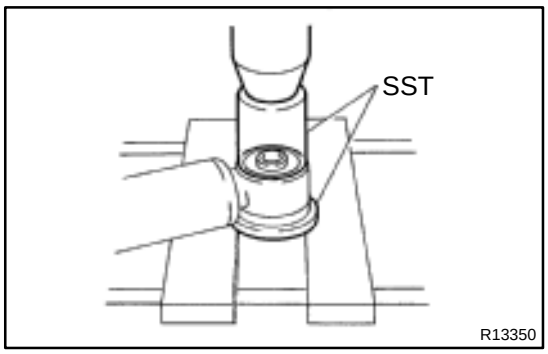

REPLACEMENT

1. REMOVE BUSHING

Using SST and a press, remove the bushing.

SST 09506–35010, 09632–36010

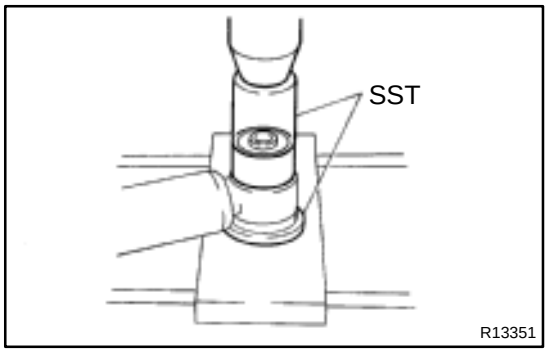

2. INSTALL NEW BUSHING

Using SST and a press, install a new bushing.

SST 09506–35010, 09632–36010

HINT:

Do not apply grease or oil to the bushing.

FRONT STABILIZER BAR (4WD and PRE RUNNER)

SA0B4–03

COMPONENTS

HINT:

Pre runner is the model described below.

RZN191L–TRPDKAB, RZN196L–CRPDKAB, VZN195L–CRPDKAB

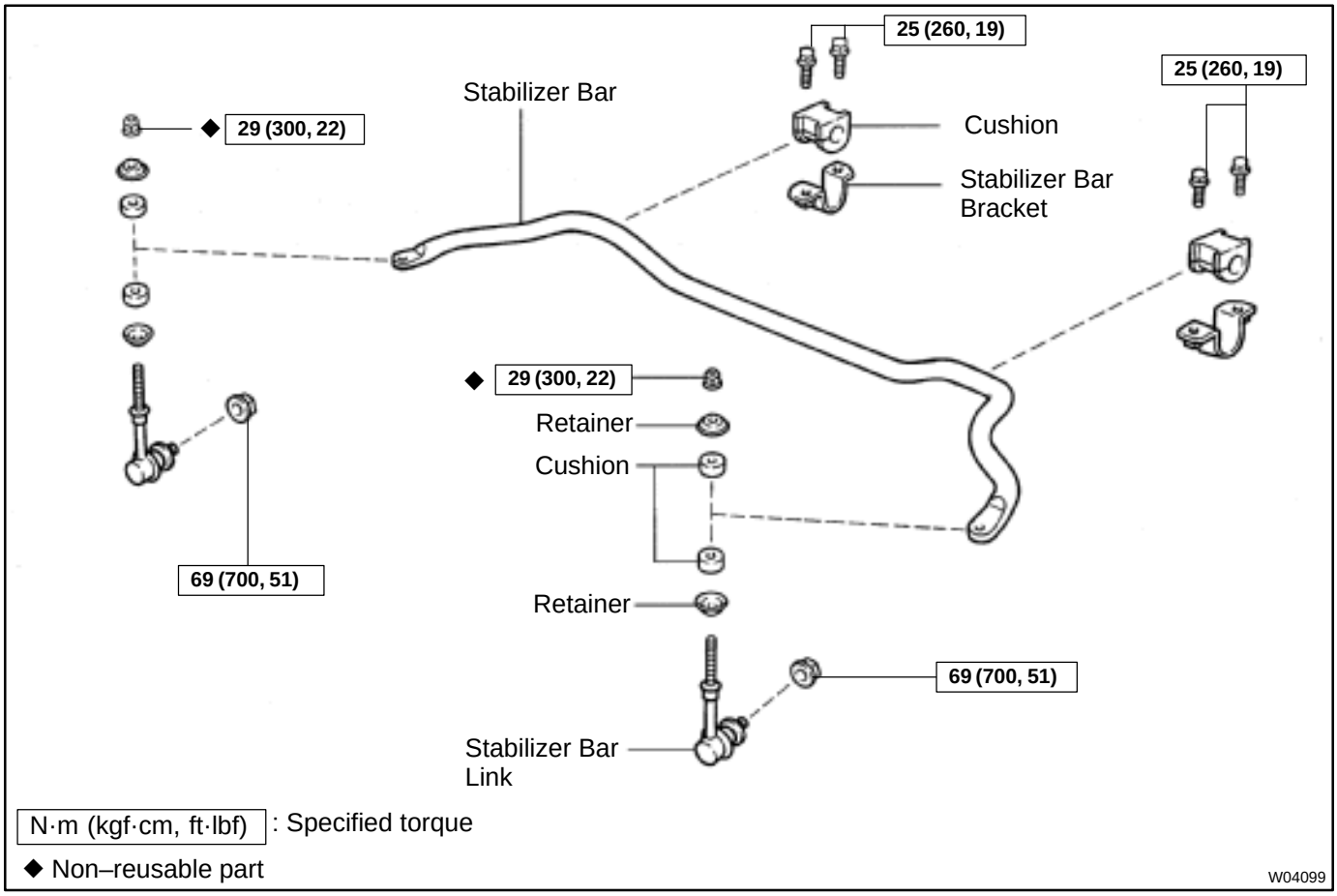

SA0B6–02

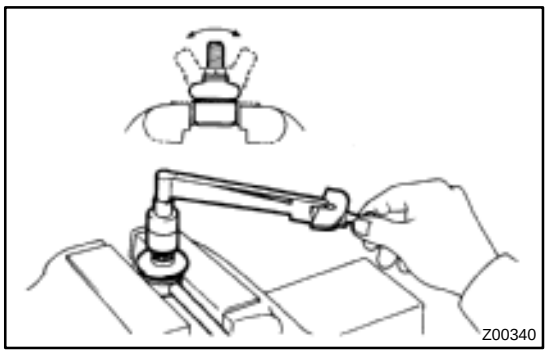

INSPECTION

INSPECT STABILIZER BAR LINK BALL JOINT FOR ROTATION CONDITION

(a) As shown in the illustration, flip the ball joint stud back and forth 5 times before installing the nut.

(b) Using a torque wrench, turn the nut continuously 1 turn each 2 – 4 seconds and take the torque reading on the 5th turn.

Turning torque:
0.05 – 2.0 N·m (0.5 – 20 kgf·cm, 0.4 – 17 in.·lbf)

SA0B7–02

INSTALLATION

Installation is in the reverse order of removal (See page SA–128).

SA0B5–02

REMOVAL

1. REMOVE FRONT WHEELS

Torque: 110 N·m (1,150 kgf·cm, 83 ft·lbf)

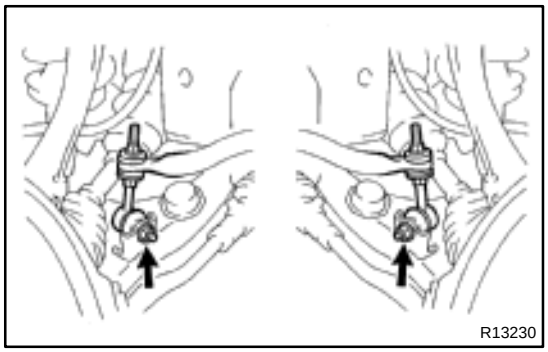

2. DISCONNECT STABILIZER BAR LINKS

(a) Remove the nut and disconnect the stabilizer bar link from the lower suspension arm.

Torque: 69 N·m (700 kgf·cm, 51 ft·lbf)

HINT:

If the ball joint stud turns together with the nut, use a hexagon wrench to hold the stud.

(b) Employ the same manner described above to the other side.

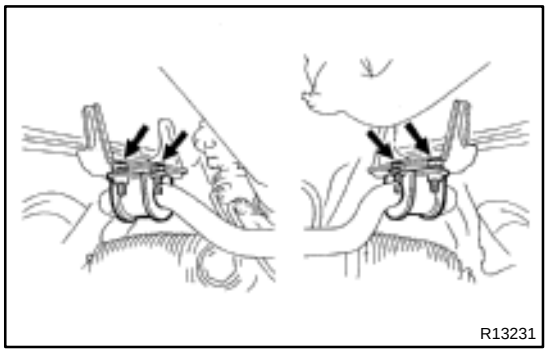

3. REMOVE STABILIZER BAR

(a) Remove the 4 bracket set bolts and stabilizer bar with the cushions and brackets.

Torque: 25 N·m (260 kgf·cm, 19 ft·lbf)

(b) Remove the brackets and cushions from the stabilizer bar.

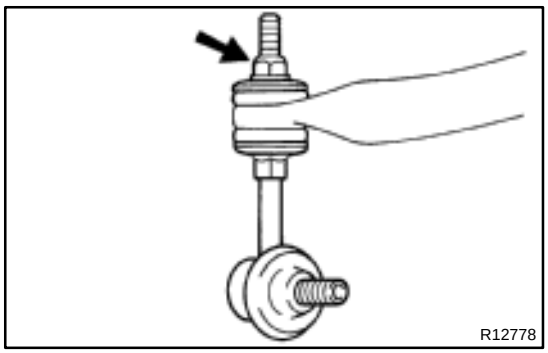

4. REMOVE STABILIZER BAR LINKS

(a) Hold the stabilizer bar link, remove the nut, retainers and bushings.

Torque: 29 N·m (300 kgf·cm, 22 ft·lbf)

(b) Employ the same manner described above to the other side.

FRONT UPPER BALL JOINT (4WD and PRE RUNNER)

SA1GA–01

COMPONENTS

HINT:

Pre runner is the model described below.

RZN191L–TRPDKAB, RZN196L–CRPDKAB, VZN195L–CRPDKAB

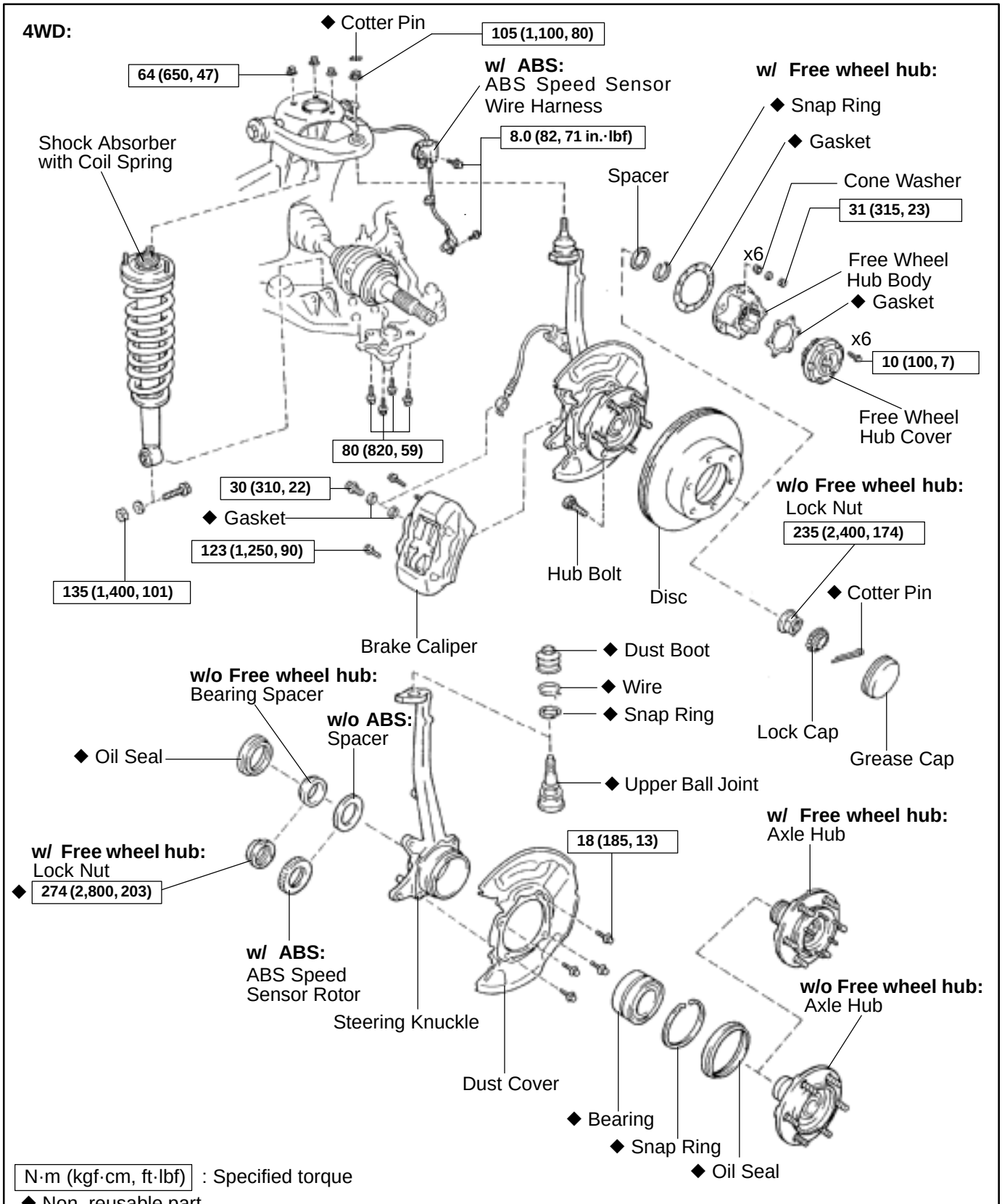

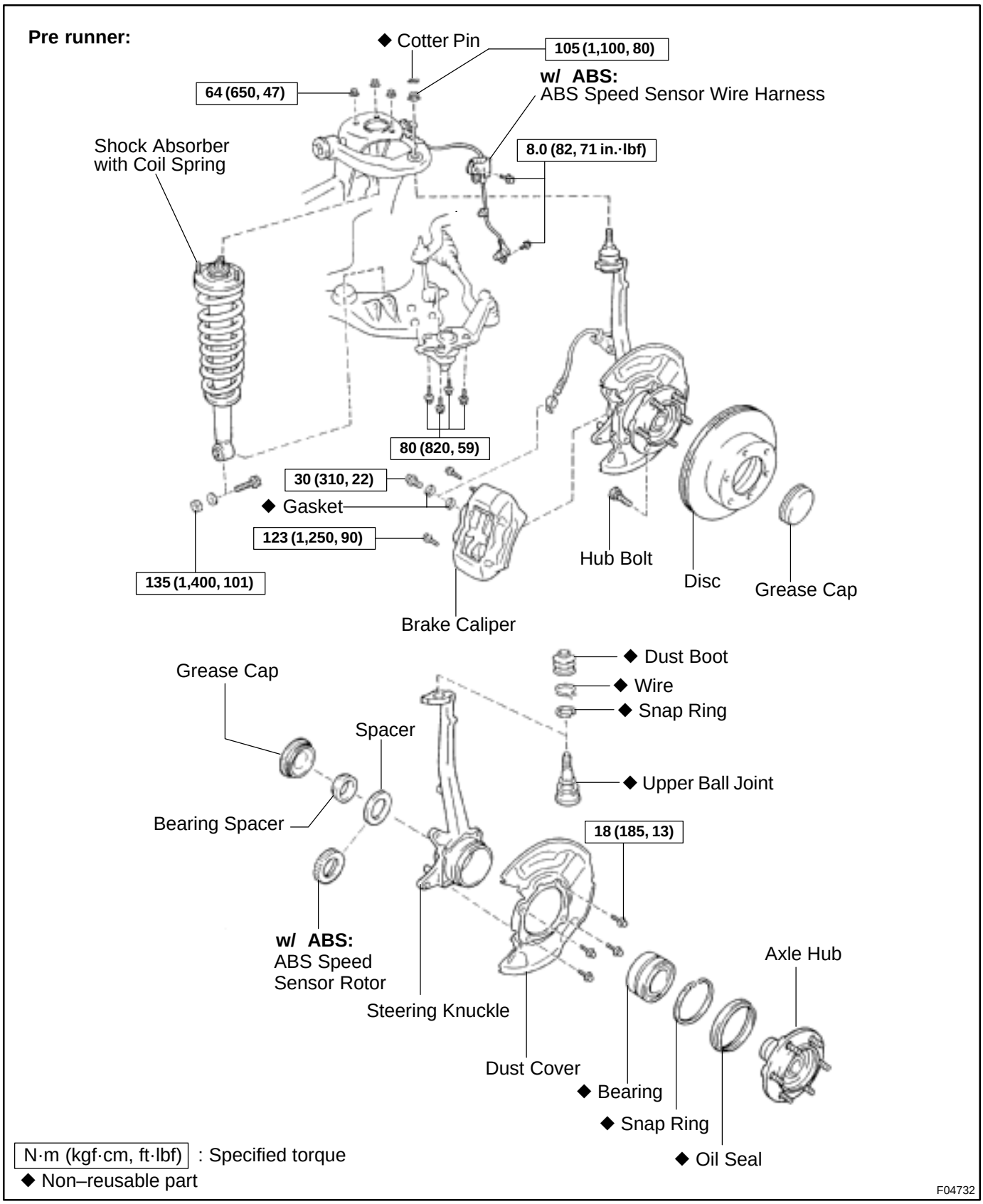
Pre runner:
◆ Cotter Pin
105 (1,100, 80)
64 (650, 47)
w/ ABS:
ABS Speed Sensor Wire Harness
Shock Absorber with Coil Spring
8.0 (82, 71 in.·lbf)
80 (820, 59)
30 (310, 22)
◆ Gasket
123 (1,250, 90)
135 (1,400, 101)
Hub Bolt
Disc
Grease Cap
Brake Caliper
Grease Cap
◆ Dust Boot
◆ Wire
◆ Snap Ring
Spacer
◆ Upper Ball Joint
Bearing Spacer
18 (185, 13)
w/ ABS:
ABS Speed Sensor Rotor
Axle Hub
Steering Knuckle
Dust Cover
◆ Bearing
◆ Snap Ring
◆ Oil Seal
N·m (kgf·cm, ft·lbf) : Specified torque
◆ Non–reusable part
F04732

SA0AO–02

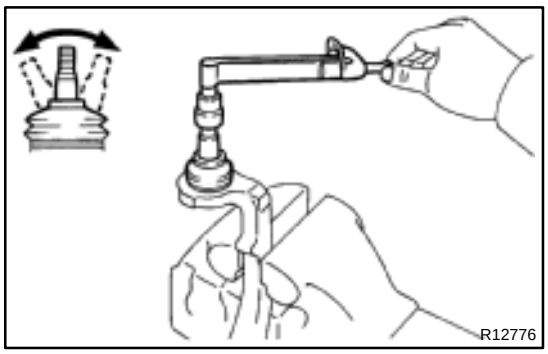

INSPECTION

INSPECT UPPER BALL JOINT FOR ROTATION CONDITION

(a) As shown in the illustration, flip the ball joint stud back and forth 5 times, before installing the nut.

(b) Using a torque wrench, turn the nut continuously 1 turn each 2 – 4 seconds and take the torque reading on the 5th turn.

Turning torque:
0.7 – 4.4 N·m (7 – 45 kgf·cm, 6 – 39 in.·lbf)

SA0AQ–02

INSTALLATION

INSTALL STEERING KNUCKLE WITH AXLE HUB (See page SA–30)

SA0AN–02

REMOVAL

REMOVE STEERING KNUCKLE WITH AXLE HUB (See page SA–24)

SA0AP–03

REPLACEMENT

1. REMOVE UPPER BALL JOINT

(a) Remove the wire and boot.

(b) Using a snap ring expander, remove the snap ring.

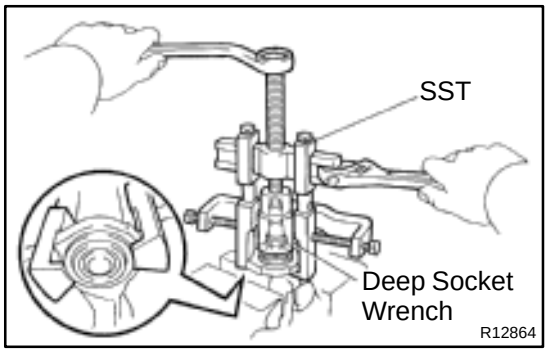

(c) Using SST and a deep socket wrench, remove the upper ball joint.

SST 09950–40011 (09951–04010, 09952–04010, 09953–04020, 09954–04010, 09955–04031, 09957–04010, 09958–04011)

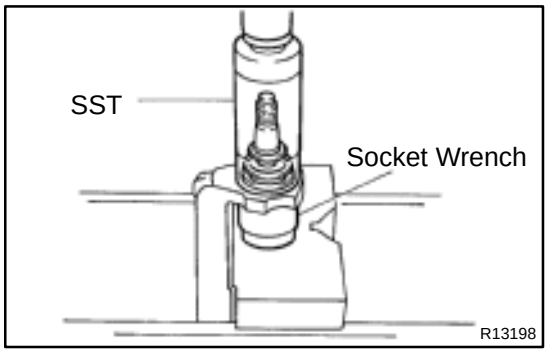

2. INSTALL UPPER BALL JOINT

(a) Using SST and a socket wrench, install a new ball joint.

SST 09309–37010

(b) Using a snap ring expander, install a new snap ring.

(c) Install a new boot and fix it with a new wire.

HINT:

Use the grease supplied in the kit.

FRONT UPPER SUSPENSION ARM (4WD and PRE RUNNER)

SA0AC–03

COMPONENTS

HINT:

Pre runner is the model described below.

RZN191L–TRPDKAB, RZN196L–CRPDKAB, VZN195L–CRPDKAB

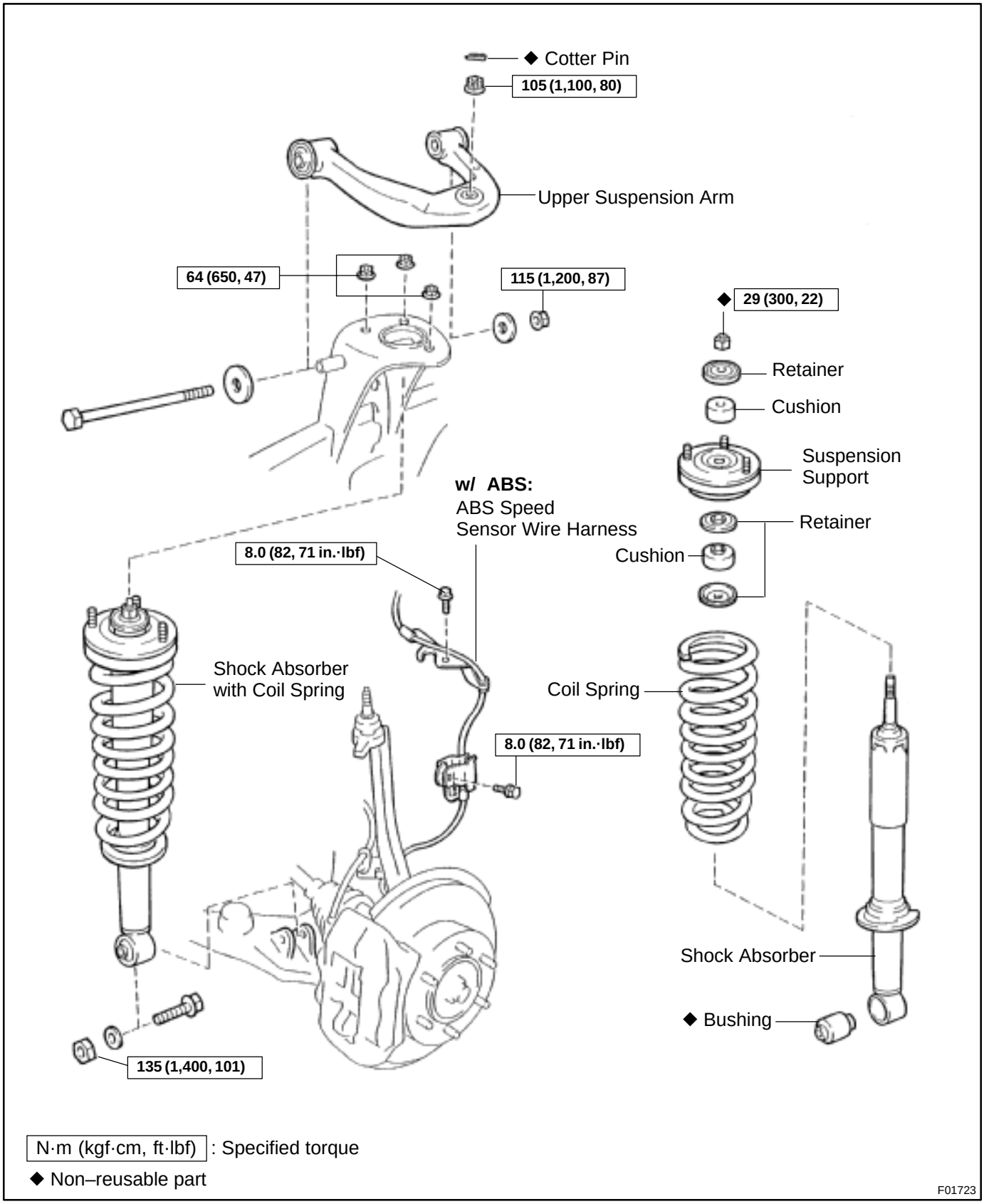

N·m (kgf·cm, ft·lbf) : Specified torque

◆ Non–reusable part

F01723

SA0AE–02

INSTALLATION

Installation is in the reverse order of removal (See page SA–96).

HINT:

After installation, check the front wheel alignment (See page SA–9).

SA0AD–03

REMOVAL

1. REMOVE SHOCK ABSORBER WITH COIL SPRING (See page SA–83)

2. w/ ABS:

DISCONNECT ABS SPEED SENSOR WIRE HARNESS CLAMP

Remove the 2 bolts and ABS speed sensor wire harness clamps from the steering knuckle and upper suspension arm.

Torque: 8.0 N·m (82 kgf·cm, 71 in.·lbf)

3. DISCONNECT UPPER BALL JOINT

(a) Remove the cotter pin and loosen the nut.

Torque: 105 N·m (1,100 kgf·cm, 80 ft·lbf)

HINT:

At the time of installation, if the hole for the cotter pin are not aligned, tighten the nut further up to 60°.

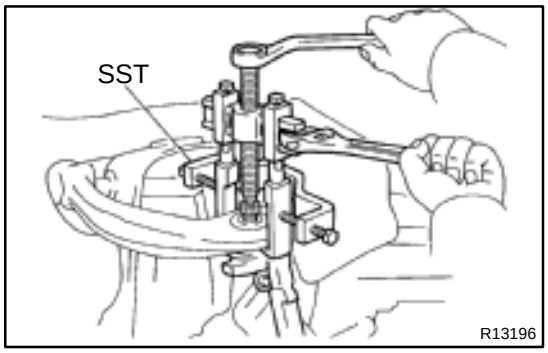

(b) Using SST, disconnect the upper ball joint.

SST 09950–40011 (09951–04010, 09952–04010, 09953–04020, 09954–04010, 09955–04031, 09958–04011)

(c) Support the steering knuckle securely.

(d) Remove the nut.

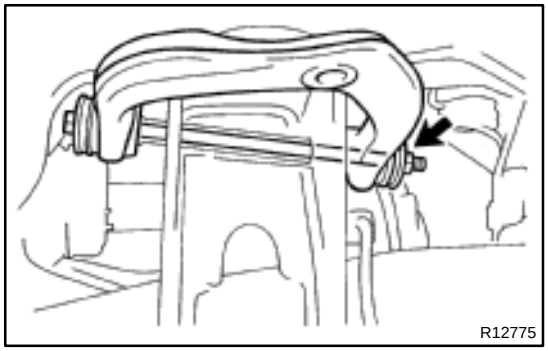

4. REMOVE UPPER SUSPENSION ARM

Remove the nut, bolt, 2 washers and upper suspension arm.

Torque: 115 N·m (1,200 kgf·cm, 87 ft·lbf)

HINT:

At the time of installation, after stabilizing the suspension, torque the nut.

TIRE AND WHEEL

SA091–06

INSPECTION

HINT:

Pre runner is the model described below.

RZN191L–TRPDKAB, RZN196L–CRPDKAB, VZN195L–CRPDKAB

1. INSPECT TIRE

(a) Check the tires for wear and proper inflation pressure.

Cold tire inflation pressure:

Tire size	Front kPa (kgf/cm^2, psi)	Rear kPa (kgf/cm^2, psi)
P195/75R14	200 (2.0, 29)	240 (2.4, 35)
P215/70R14	200 (2.0, 29)	200 (2.0, 29)
P225/75R15	180 (1.8, 26)	200 (2.0, 29)
31x10.5R15LT		
P265/75R15	180 (1.8, 26)	180 (1.8, 26)

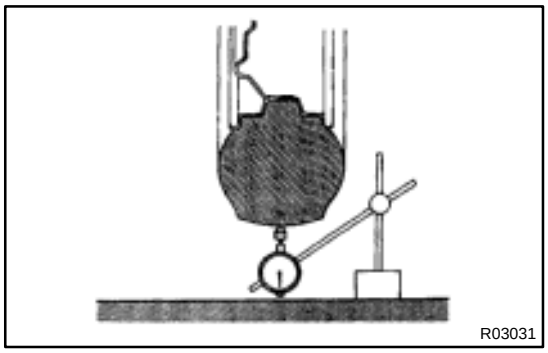

(b) Using a dial indicator, check the tire runout.

Tire runout: 3.0 mm (0.118 in.) or less

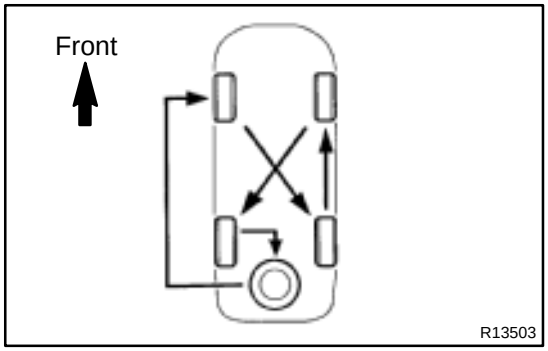

2. ROTATING TIRE

HINT:

See the illustration for where to rotate each tire when you include the spare tire in rotation.

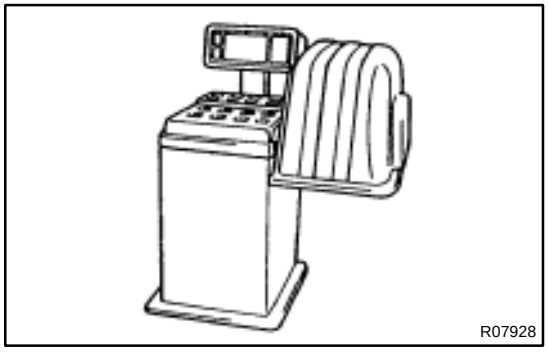

3. INSPECT WHEEL BALANCE

(a) Check and adjust the Off–the–car balance.

(b) If necessary, check and adjust the On–the–car balance.

Imbalance after adjustment:

2WD: 11.0 g (0.024 lb) or less

4WD and pre runner: 14.0 g (0.031 lb) or less

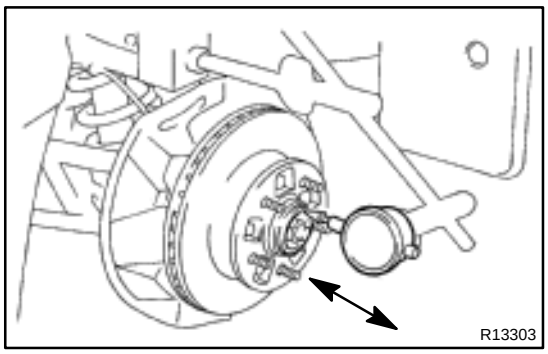

4. 2WD (Except pre runner):
CHECK WHEEL BEARING LOOSENESS

Using a dial indicator near the center of the axle hub and check the backlash in bearing shaft direction.

Maximum: 0.05 mm (0.0020 in.)

5. CHECK FRONT SUSPENSION FOR LOOSENESS

6. CHECK STEERING LINKAGE FOR LOOSENESS

7. CHECK BALL JOINT FOR LOOSENESS

8. CHECK SHOCK ABSORBER WORKS PROPERLY

- Check that oil leaks
- Check the mounting bushings for wear
- Bounce front and rear of the vehicle

FRONT WHEEL ALIGNMENT (4WD and PRE RUNNER)

SA1FZ–01

INSPECTION

HINT:

Pre runner is the model described below.

RZN191L–TRPDKAB, RZN196L–CRPDKAB, VZN195L–CRPDKAB

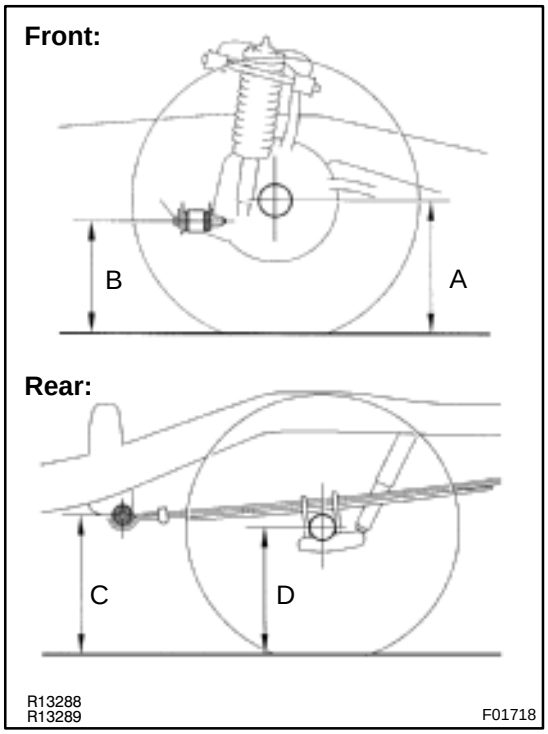

1. MEASURE VEHICLE HEIGHT

Vehicle height:

Models	Front A – B	Rear C – D
RZN161L	49 mm (1.93 in.)	35 mm (1.38 in.)
RZN171L	48 mm (1.89 in.)	48 mm (1.89 in.)
RZN191L	46 mm (1.81 in.)	39 mm (1.54 in.)
RZN196L	45 mm (1.77 in.)	51 mm (2.01 in.)
VZN170L	48 mm (1.89 in.)	50 mm (1.97 in.)
VZN195L	45 mm (1.77 in.)	53 mm (2.09 in.)

Measuring points:

A: Ground clearance of spindle center.

B: Ground clearance of front adjusting cam bolt center.

C: Ground clearance of leaf spring front hanger pin bolt center.

D: Ground clearance of rear axle shaft center.

NOTICE:

Before inspecting the wheel alignment, adjust the vehicle height to the specified value.

If the vehicle height is not the specified value, try to adjust it by pushing down on or lifting the body.

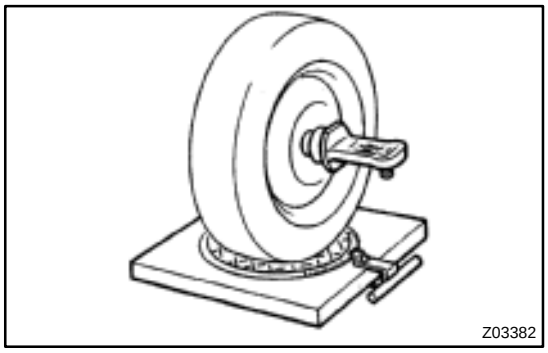

2. INSTALL CAMBER–CASTER–KINGPIN GAUGE OR POSITION VEHICLE ON WHEEL ALIGNMENT TESTER

Follow the specific instructions of the equipment manufacturer.

3. INSPECT CAMBER, CASTER AND STEERING AXIS INCLINATION

Camber, caster and steering axis inclination:

RZN161L model

Camber	0°12' ± 45' (0.2° ± 0.75°)
Right–left error	30' (0.5°) or less
Caster	1°42' ± 45' (1.7° ± 0.75°)
Right–left error	30' (0.5°) or less
Steering axis inclination	10°30' ± 45' (10.5° ± 0.75°)
Right–left error	30' (0.5°) or less

RZN171L model

Camber Right–left error	0°18' ± 45' (0.3° ± 0.75°) 30' (0.5°) or less
Caster Right–left error	1°30' ± 45' (1.5° ± 0.75°) 30' (0.5°) or less
Steering axis inclination Right–left error	10°30' ± 45' (10.5° ± 0.75°) 30' (0.5°) or less

RZN191L model

Camber Right–left error	0°18' ± 45' (0.3° ± 0.75°) 30' (0.5°) or less
Caster Right–left error	1°36' ± 45' (1.6° ± 0.75°) 30' (0.5°) or less
Steering axis inclination Right–left error	10°30' ± 45' (10.5° ± 0.75°) 30' (0.5°) or less

RZN196L model

Camber Right–left error	0°18' ± 45' (0.3° ± 0.75°) 30' (0.5°) or less
Caster Right–left error	1°24' ± 45' (1.4° ± 0.75°) 30' (0.5°) or less
Steering axis inclination Right–left error	10°24' ± 45' (10.4° ± 0.75°) 30' (0.5°) or less

VZN170L model

Camber Right–left error	0°18' ± 45' (0.3° ± 0.75°) 30' (0.5°) or less
Caster Right–left error	1°25' ± 45' (1.42° ± 0.75°) 30' (0.5°) or less
Steering axis inclination Right–left error	10°30' ± 45' (10.5° ± 0.75°) 30' (0.5°) or less

VZN195L model

Camber Right–left error	0°18' ± 45' (0.3° ± 0.75°) 30' (0.5°) or less
Caster Right–left error	1°18' ± 45' (1.3° ± 0.75°) 30' (0.5°) or less
Steering axis inclination Right–left error	10°24' ± 45' (10.4° ± 0.75°) 30' (0.5°) or less

If the steering axis inclination is not within the specified value, after the camber and caster have been correctly adjusted, recheck the steering knuckle and front wheel for bearing or looseness.

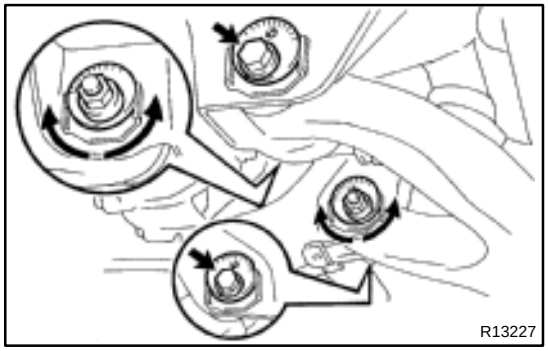

4. ADJUST CAMBER AND CASTER

(a) Loosen the front and/or rear adjusting cam nuts.

(b) Adjust the camber and caster by front and/or rear adjusting cams (See adjustment chart).

HINT:

Try to adjust the camber and caster to the center of the specified values.

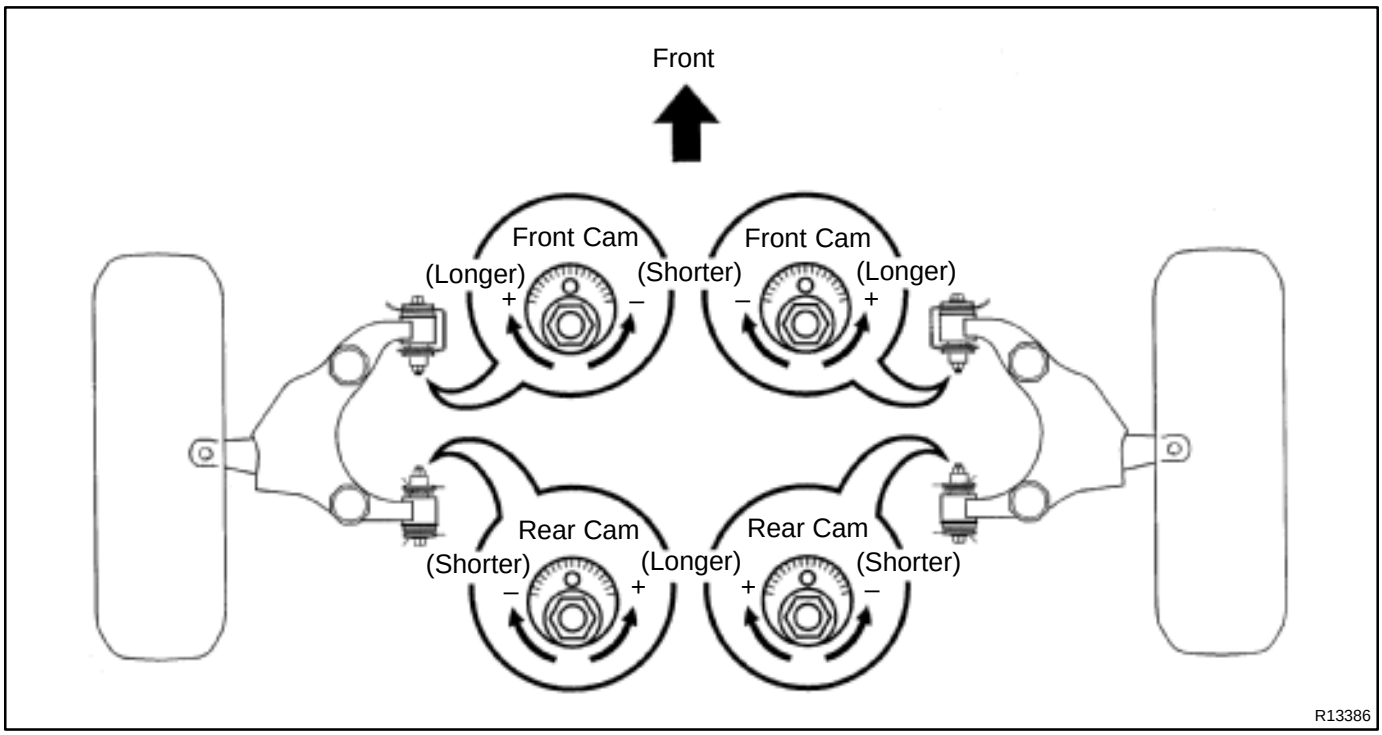

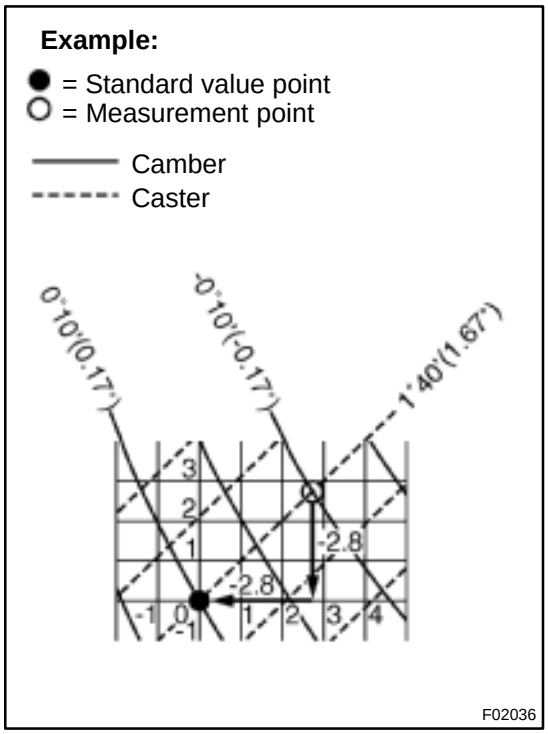

(c) How to read adjustment chart.

(1) Find the wheel alignment standard value applicable for the particular model.

(2) Mark the selected standard value on the adjustment chart.

Example:
Camber: 0˚10’ (0.17˚)
Caster: 1˚40’ (1.67˚)

(3) Mark the alignment value measured when the vehicle was non–loaded on the adjustment chart.

Example:
Camber: –0˚10’ (–0.17˚)
Caster: 1˚40’ (1.67˚)

(4) As shown in the chart, read the distance from the measured value to the standard value, and adjust the front and/or rear adjusting cams accordingly.

Example:
Front cam: –(Shorter) 2.8
Rear cam: –(Shorter) 2.8

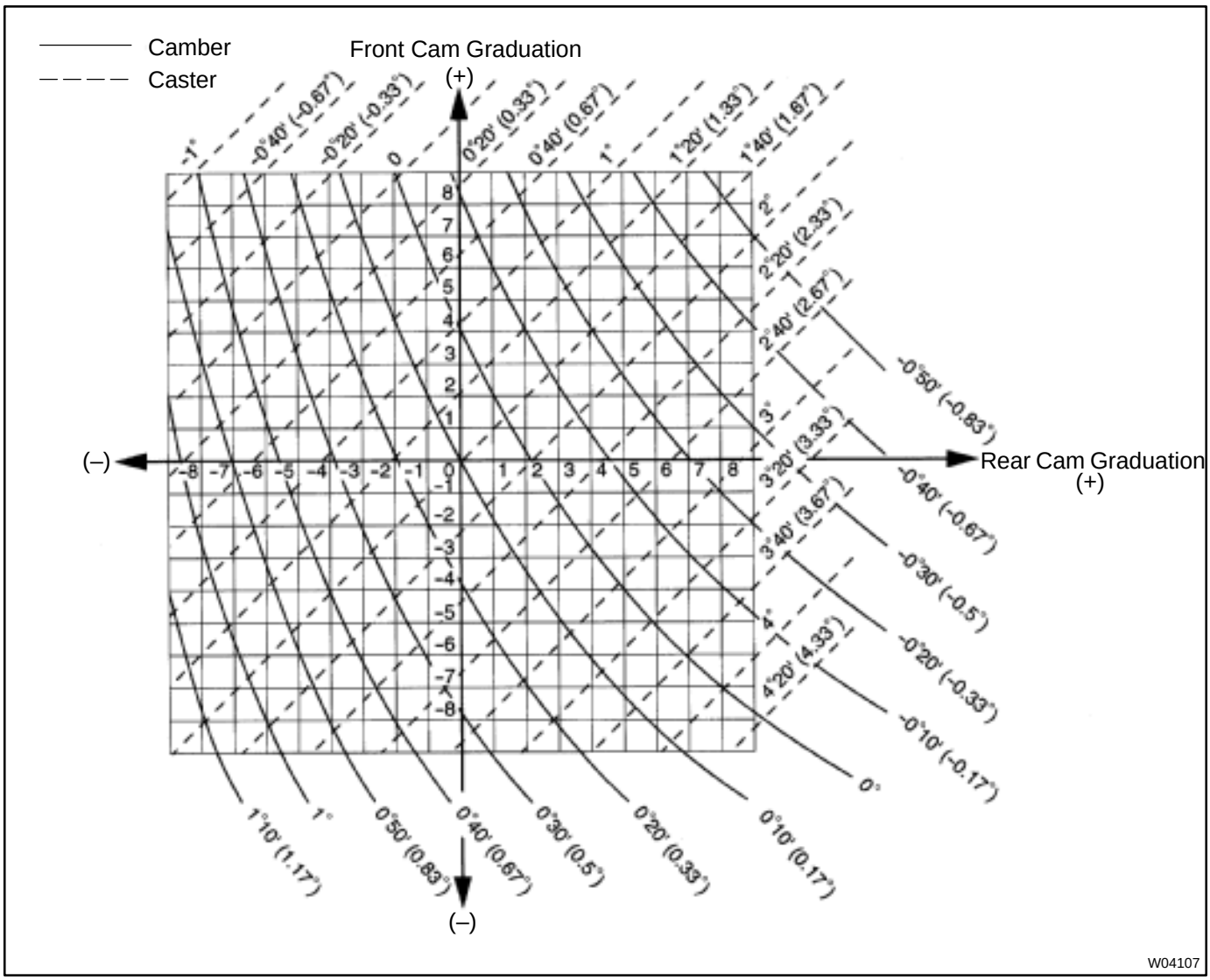

(d) Torque the front and/or rear adjusting cam nuts.
Torque: 130 N·m (1,325 kgf·cm, 96 ft·lbf)

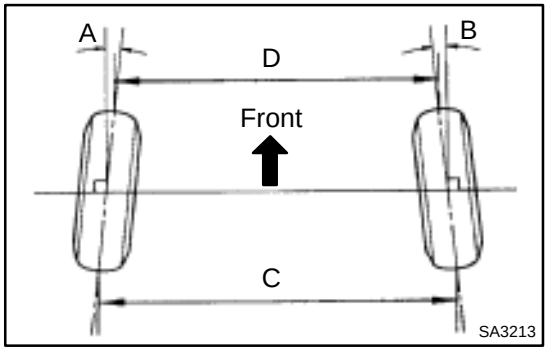

5. INSPECT TOE–IN

Toe–in:

Toe–in (total)	A + B: 0°12' ± 12' (0.2° ± 0.2°) C – D: 2 ± 2 mm (0.08 ± 0.08 in.)

If the toe–in is not within the specified value, adjust the rack ends.

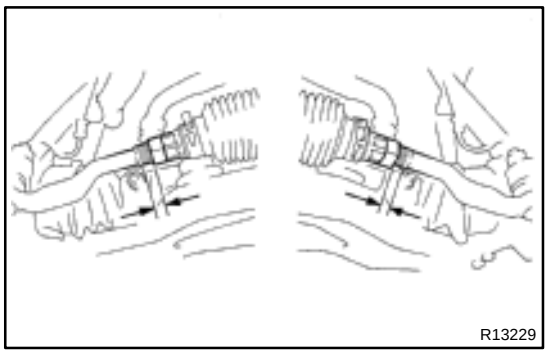

6. ADJUST TOE–IN AND WHEEL ANGLE

HINT:

First, check or adjust the lengths of the rack ends, then adjust the toe–in.

Rack end length difference: 1.5 mm (0.059 in.) or less

(a) Remove the 2 clips.

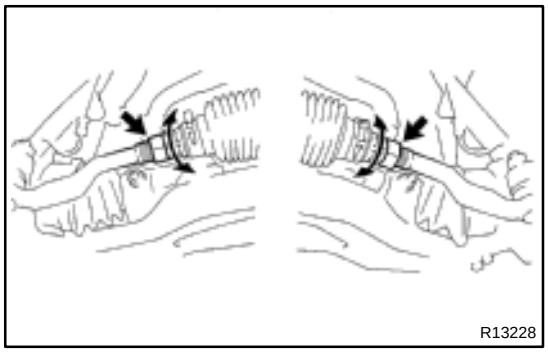

(b) Loosen the tie rod end lock nuts.

(c) Turn the right and left rack ends by an equal amount to adjust the toe–in.

HINT:

Try to adjust the toe–in to the center of the specified value.

(d) Make sure that the lengths of the right and left rack ends are the same.

Rack end length difference: 1.5 mm (0.059 in.) or less

(e) Tighten the tie rod end lock nuts.

Torque: 55 N·m (560 kgf·cm, 41 ft·lbf)

(f) Place the boots on the seats and install the clips.

HINT:

Make sure that the boots are not twisted.

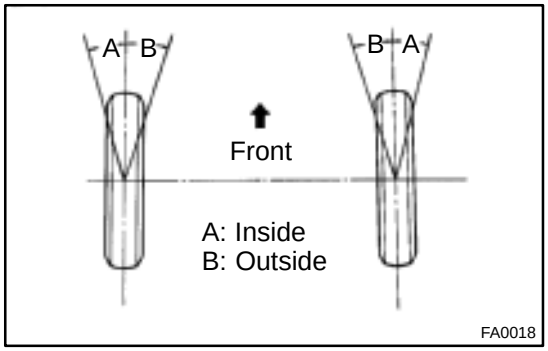

(g) Inspect the wheel angle.

Turn the steering wheel fully and measure the turning angle.

Wheel turning angle:

Item	Inside wheel	Outside wheel: Reference
Max.	37˚05' (35˚05' – 38˚05') 37.08˚ (35.08˚ – 38.08˚)	32˚20' 32.33˚

If the right and left wheel turning angles differ from the specified value, readjust the toe–in and wheel angle within the specified value. At this time, the right and left error lengths of the rack end may be less than 1.5 mm (0.059 in.).

TROUBLESHOOTING

SA090–03

PROBLEM SYMPTOMS TABLE

Use the table below to help you find the cause of the problem. The numbers indicate the priority of the likely cause of the problem. Check each part in order. If necessary, replace these parts.

(w/ Differential locking system):

- **Check that center differential lock mode is set.**
- **When switching differential Free ↔ Lock, the indicator lamp will blink if the gears of the differential lock sleeve are not meshed. If this occurs, when the tires are rotated to apply differential power to the differential, the differential locks and the indicator lamp lights up.**

Symptom	Suspect Area	See page
Wander/pulls	HINT: For pulls, refer to "Wheel Alignment Diagnosis Manual" (DM021E). 4. Tire (Worn or improperly inflated) 5. Wheel alignment (Incorrect) 6. Steering linkage (Loosen or worn) 7. Hub bearing (Loosen or worn) 8. Steering gear (Out of adjustment or broken)	 SA–3 SA–5 SA–9 – SA–15 SA–133 SR–58 SR–71 SR–90
Bottoming	1. Vehicle (Overloaded) 2. Spring (Weak) 3. Shock absorber (Worn)	– SA–74 SA–79 SA–211 SA–76 SA–82 SA–208
Sways/pitches	1. Tire (Worn or improperly inflated) 2. Stabilizer bar (Bent or broken) 3. Shock absorber (Worn)	SA–124 SA–76 SA–127 SA–76 SA–82 SA–206
Front wheel shimmy	1. Tire (Worn or improperly inflated) 2. Wheel (Out of balance) 3. Shock absorber (Worn) 4. Wheel alignment (Incorrect) 5. Ball joints (Worn) 6. Hub bearing (Loosen or worn) 7. Steering linkage (Loosen or worn) 8. Steering gear (Out of adjustment or broken)	SA–3 SA–3 SA–76 SA–82 SA–5 SA–9 SA–90 SA–111 SA–114 SA–117 SA–119 SA–122 SA–14 – SR–58 SR–71 SR–90

Abnormal tire wear	1. Tire (Improperly inflated) 2. Wheel alignment (Incorrect) 3. Shock absorber (Worn) 4. Suspension parts (Worn)	SA–3 SA–5 SA–9 SA–76 SA–82 SA–206 –
Noise in front differential	1. Oil level (Low or wrong grade) 2. Excessive backlash between pinion and ring gear 3. Ring, pinion or side gear (Worn or chipped) 4. Pinion shaft bearing (Worn) 5. Side bearing (Worn) 6. Differential bearing (Loosen or worn)	SA–45 SA–49 SA–49 SA–49 SA–49 SA–49
Oil leak from front differential	1. Oil level (Too high or wrong grade) 2. Front differential rear oil seal (Worn or damaged) 3. Side gear oil seal (Worn or damaged) 4. Companion flange (Loosen or damaged) 5. Side gear shaft (Damaged)	SA–45 SA–49 SA–49 SA–49 SA–49
Noise in rear axle	1. Oil level (Low or wrong grade) 2. Excessive backlash between pinion and ring gear 3. Ring, pinion or side gear (Worn or chipped) 4. Pinion shaft bearing (Worn) 5. Axle shaft bearing (Worn) 6. Differential bearing (Loosen or worn)	SA–139 SA–144 SA–161 SA–179 SA–144 SA–161 SA–179 SA–144 SA–161 SA–179 SA–131 SA–144 SA–161 SA–179
Oil leak from rear axle	1. Oil seal (Worn or damaged) 2. Rear axle housing (Cracked)	SA–131 –
Oil leak from rear differential	1. Oil level (Too high or wrong grade) 2. Oil seal (Worn or damaged) 3. Companion flange (Loosen or damaged)	SA–139 SA–139 SA–144 SA–161 SA–179
Indicator lights do not light up	1. Fusible link (Blown) 2. GAUGE fuse (Blown) 3. Bulb (Burned out) 4. Wiring or ground (Faulty)	– – – –
Indicator lights do not light up (Diff. lock control switch RR or FR position)	1. Diff. fuse (Blown) 2. Diff. lock control switch (Faulty) 3. Diff. lock ECU (Faulty) 4. Wiring or ground (Faulty)	– SA–202 SA–202 –
Differential lock does not operate	1. Diff. lock control switch (Faulty) 2. Diff. lock actuator (Faulty) 3. Diff. lock ECU (Faulty) 4. Differential carrier (Faulty) 5. Wiring or ground (Faulty)	SA–202 SA–202 SA–202 – –
After differential lock, lock is not released When vehicle speed is higher than approx. 8 km/h (5 mph)	1. Speed sensor (Faulty) 2. Diff. lock ECU (Faulty) 3. Wiring or ground (Faulty)	BE–38 SA–202 –

REAR AXLE SHAFT

SA0B8–03

COMPONENTS

HINT:

Pre runner is the model described below.

RZN191L–TRPDKAB, RZN196L–CRPDKAB, VZN195L–CRPDKAB

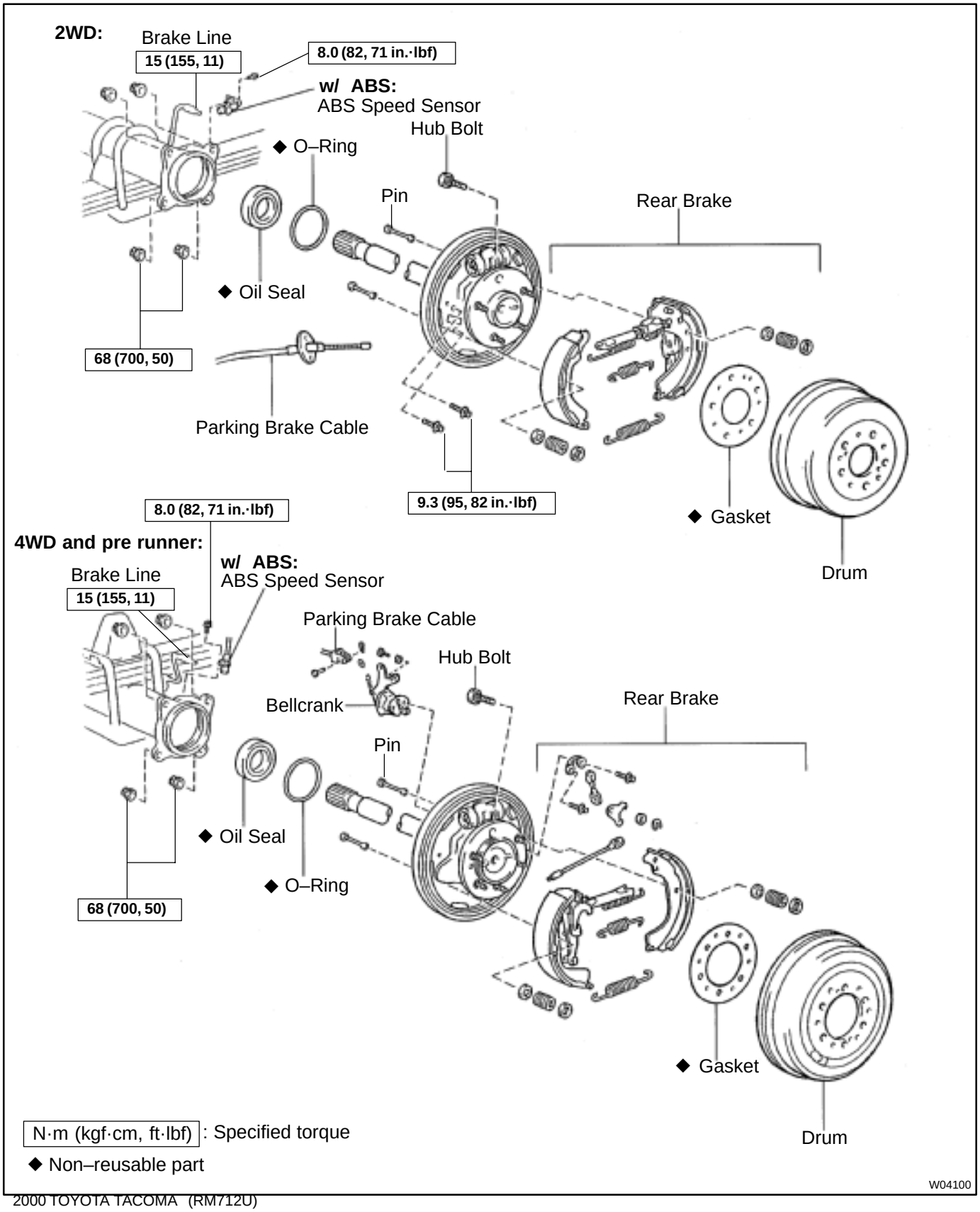

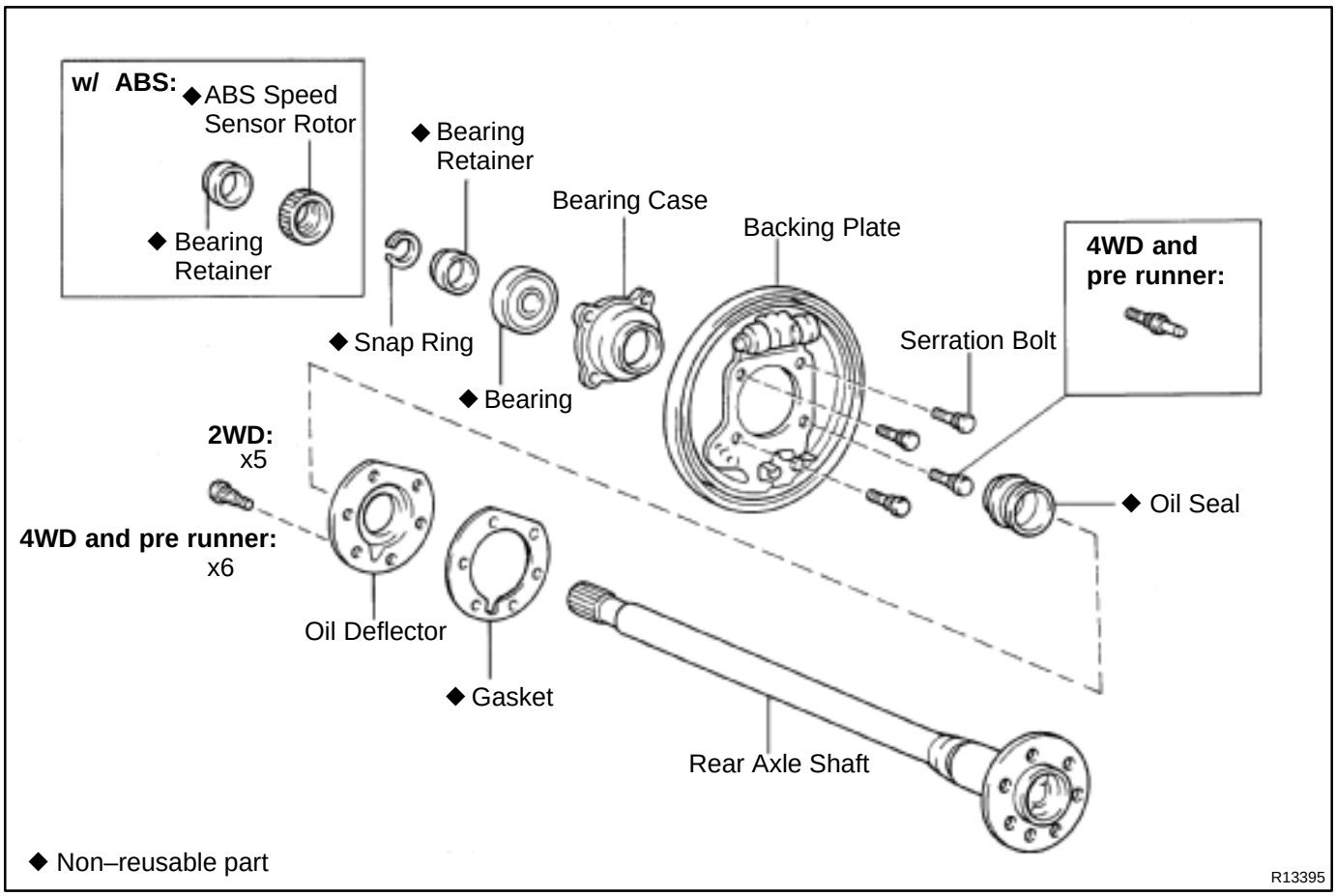
w/ ABS:
◆ABS Speed Sensor Rotor
◆ Bearing Retainer
◆ Bearing Retainer
◆ Snap Ring
◆ Bearing
Bearing Case
Backing Plate
4WD and pre runner:
Serration Bolt
◆ Oil Seal
2WD: x5
4WD and pre runner: x6
Oil Deflector
◆ Gasket
Rear Axle Shaft
◆ Non–reusable part
R13395

SA1GB–01

INSPECTION

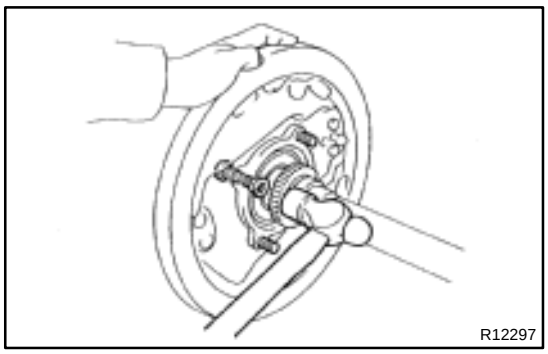
R12297

1. w/ ABS:

REMOVE BEARING RETAINER (DIFFERENTIAL SIDE) AND ABS SPEED SENSOR ROTOR

(a) Attach 4 nuts to the serration bolts and remove the serration bolts from the backing plate using a hammer.

NOTICE:

Do not reuse the nuts previously removed from the vehicle.

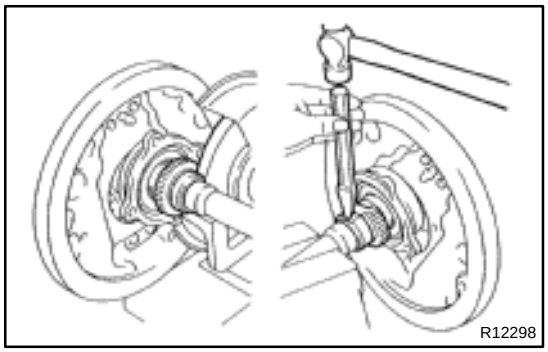
R12298

(b) Grind the retainer and sensor rotor surfaces using a grinder, then chisel them out with a chisel.

(c) Attach washers and nuts to the serration bolts, then torque the nuts to install the serration bolts to the backing plate.

(d) Remove the 4 nuts and washers from the serration bolts.

2. REMOVE SNAP RING FROM AXLE SHAFT

Using a snap ring expander, remove the snap ring.

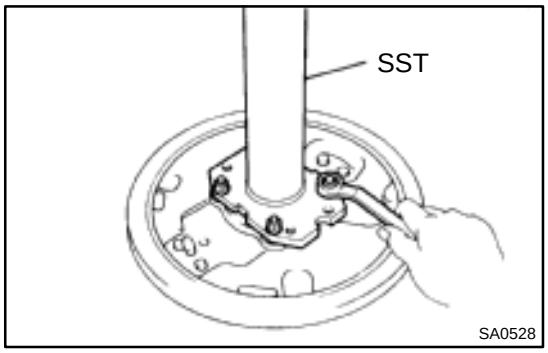

SA0528

3. REMOVE REAR AXLE SHAFT FROM BACKING PLATE

(a) Position SST on the backing plate with the 4 nuts.
SST 09521–25011

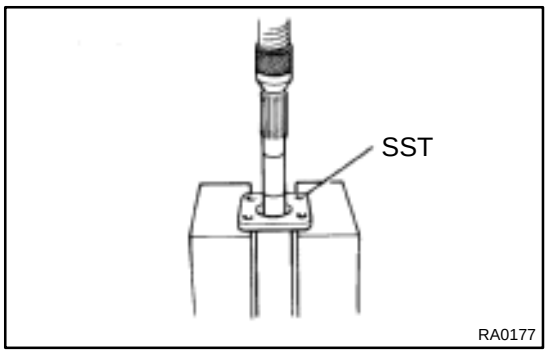

RA0177

(b) Using a press, remove the rear axle shaft and bearing retainer from the backing plate.

(c) Remove the SST.

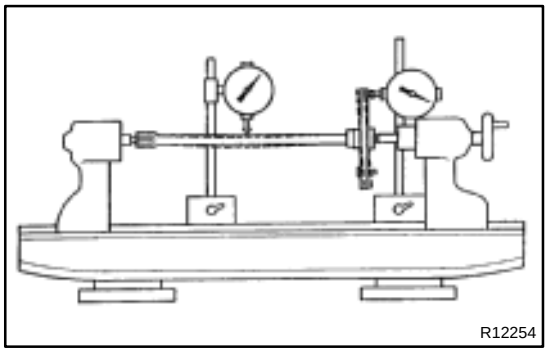
R12254

4. INSPECT AXLE SHAFT

Using a dial indicator, measure the runout of the shaft and flange.

Maximum shaft runout: 2.0 mm (0.079 in.)

Maximum flange runout: 0.1 mm (0.004 in.)

If the rear axle shaft or flange are damaged or worn, or if runout is greater than the maximum, replace the rear axle shaft.

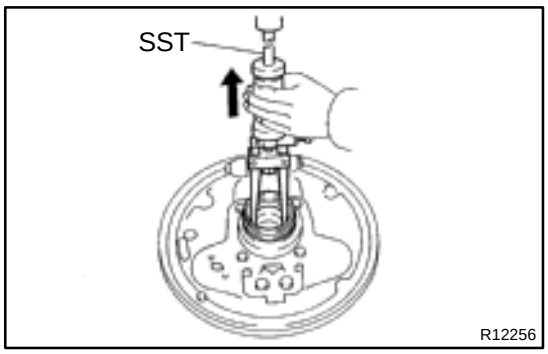

5. REMOVE OUTER OIL SEAL

Using SST, remove the oil seal.

SST 09308–00010

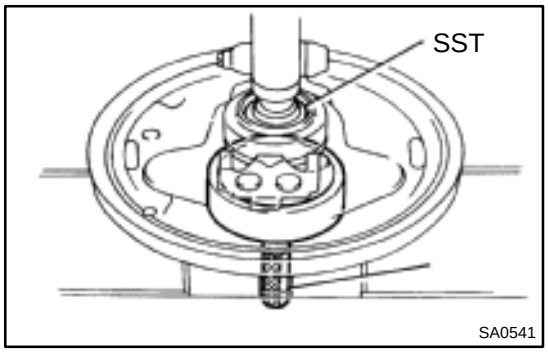

6. REPLACE REAR AXLE BEARING

(a) Using SST and a press, remove the bearing.

SST 09223–56010, 09950–60010 (09951–00560)

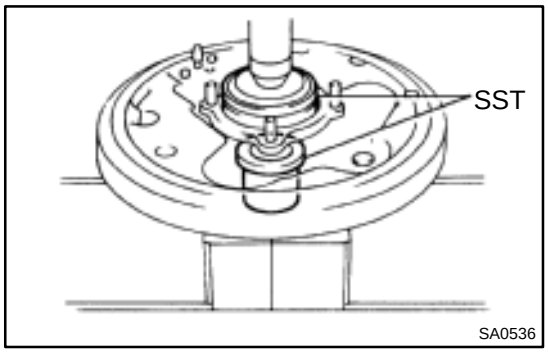

(b) Using SST and a press, install a new bearing.

SST 09515–30010, 09950–60020 (09951–00890)

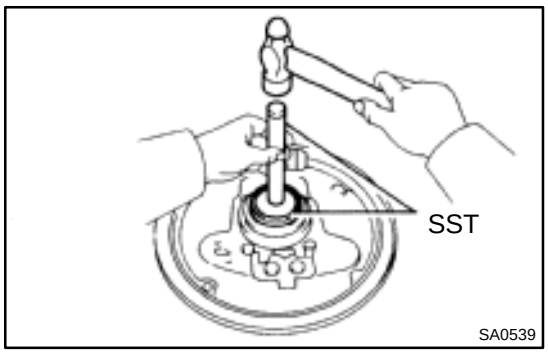

7. INSTALL NEW OUTER OIL SEAL

Using SST and a hammer, install a new oil seal.

SST 09950–60010 (09951–00610),
09950–70010 (09951–07150)

8. REPLACE BEARING CASE

(a) Remove the oil seal (outer side) and bearing.

(b) Install 4 nuts to the serration bolts.

(c) Using a hammer, remove the serration bolts and bearing case.

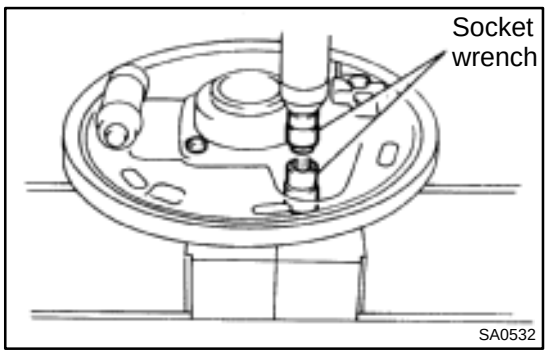

(d) Position the backing plate on a new bearing case and using 2 socket wrenches, install the serration bolts.

(e) Install a new bearing and oil seal (outer side).

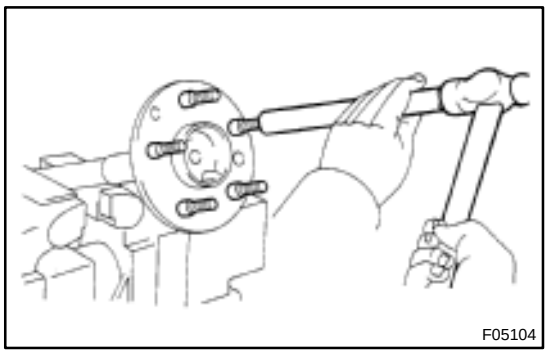

9. REPLACE OIL DEFLECTOR

(a) Using a brass bar and hammer, remove the hub bolts, oil deflector and gasket.

(b) Position a new gasket on the axle shaft and install a washer and nut to a new hub bolt, as shown in the illustration, and install the hub bolt by torquing the nut.

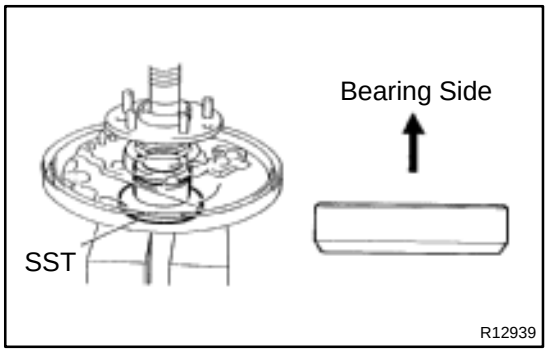

10. INSTALL REAR AXLE SHAFT IN BACKING PLATE

(a) Coat a new oil seal lip with MP grease.

(b) Install the backing plate and bearing retainer on the rear axle shaft.

(c) Using SST and a press, install the rear axle shaft into the backing plate.

SST 09316–60011 (09316–00051)

(d) Using snap ring expander, install a new snap ring.

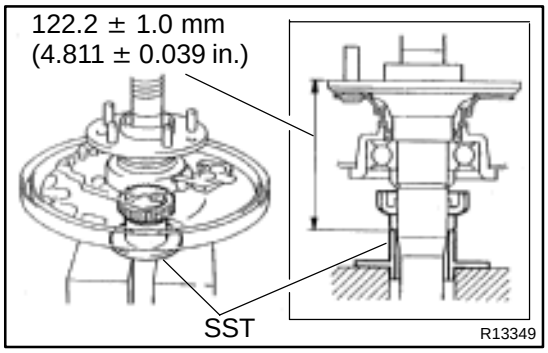

11. w/ ABS:
INSTALL ABS SPEED SENSOR ROTOR AND BEARING RETAINER (DIFFERENTIAL SIDE)

Using SST and a press, install a new sensor rotor and new bearing retainer to the axle shaft.

SST 09316–60011 (09316–00051)

Standard length: 122.2 ± 1.0 mm (4.811 ± 0.039 in.)

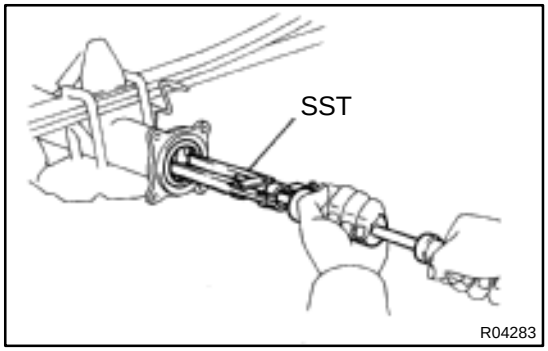

12. REPLACE OIL SEAL (INNER SIDE)

(a) Using SST, remove the oil seal.

SST 09308–00010

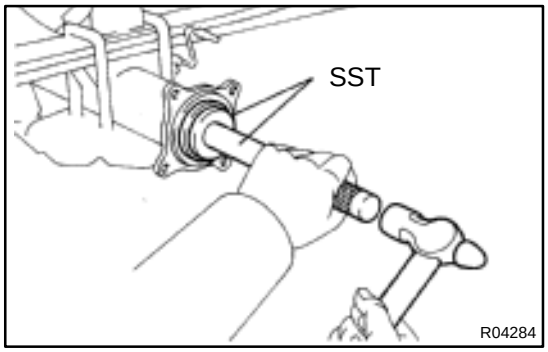

(b) Using SST and a hammer, install a new oil seal.

SST 09950–60020 (09951–00710),
09950–70010 (09951–07150)

(c) Coat a new oil seal lip with MP grease.

SA0BB–04

INSTALLATION

Installation is in the reverse order of removal (See page SA–133).

HINT:

After installation, bleed the brake system (See page BR–4) and check the ABS speed sensor signal (See page DI–415).

SA0B9–03

REMOVAL

1. REMOVE REAR WHEEL AND BRAKE DRUM
Torque: 110 N·m (1,150 kgf·cm, 83 ft·lbf)

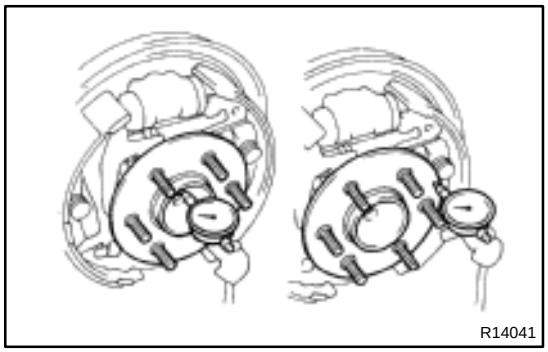
R14041

2. CHECK BEARING BACKLASH AND AXLE SHAFT DEVIATION

(a) Using a dial indicator, check the backlash in the bearing shaft direction.
Maximum: 0.7 mm (0.028 in.)

If the backlash exceeds the maximum, replace the bearing.

(b) Using a dial indicator, check the deviation at the surface of the axle shaft outside the hub bolt.
Maximum: 0.1 mm (0.0039 in.)

If the deviation exceeds the maximum, replace the axle shaft.

3. w/ ABS:
REMOVE ABS SPEED SENSOR FROM REAR AXLE HOUSING

Remove the bolt and ABS speed sensor.
Torque: 8.0 N·m (82 kgf·cm, 71 in.·lbf)

4. REMOVE REAR BRAKE ASSEMBLY
2WD: See page BR–38
4WD and pre runner: See page BR–43

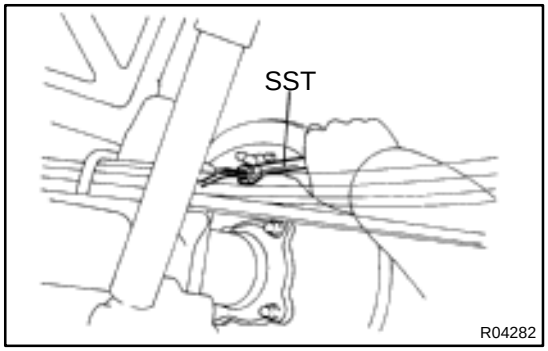

R04282

5. DISCONNECT BRAKE LINE AND PARKING BRAKE CABLE

(a) Using SST, disconnect the brake line from the wheel cylinder.
SST 09751–36011
Torque: 15 N·m (155 kgf·cm, 11 ft·lbf)

(b) 2WD:
Remove the 2 bolts and disconnect the parking brake cable.
Torque: 9.3 N·m (95 kgf·cm, 82 in.·lbf)

6. REMOVE REAR AXLE SHAFT ASSEMBLY

(a) Remove the 4 backing plate mounting nuts.
Torque: 68 N·m (700 kgf·cm, 50 ft·lbf)

(b) Pull out the rear axle shaft assembly from the rear axle housing.

NOTICE:
Be careful not to damage the oil seal.

7. REMOVE O–RING FROM REAR AXLE HOUSING

REAR DIFFERENTIAL CARRIER (3RZ–FE, 5VZ–FE w/o Diff. Lock)

SA0BN–02

COMPONENTS

HINT:

Pre runner is the model described below.

RZN191L–TRPDKAB, RZN196L–CRPDKAB, VZN195L–CRPDKAB

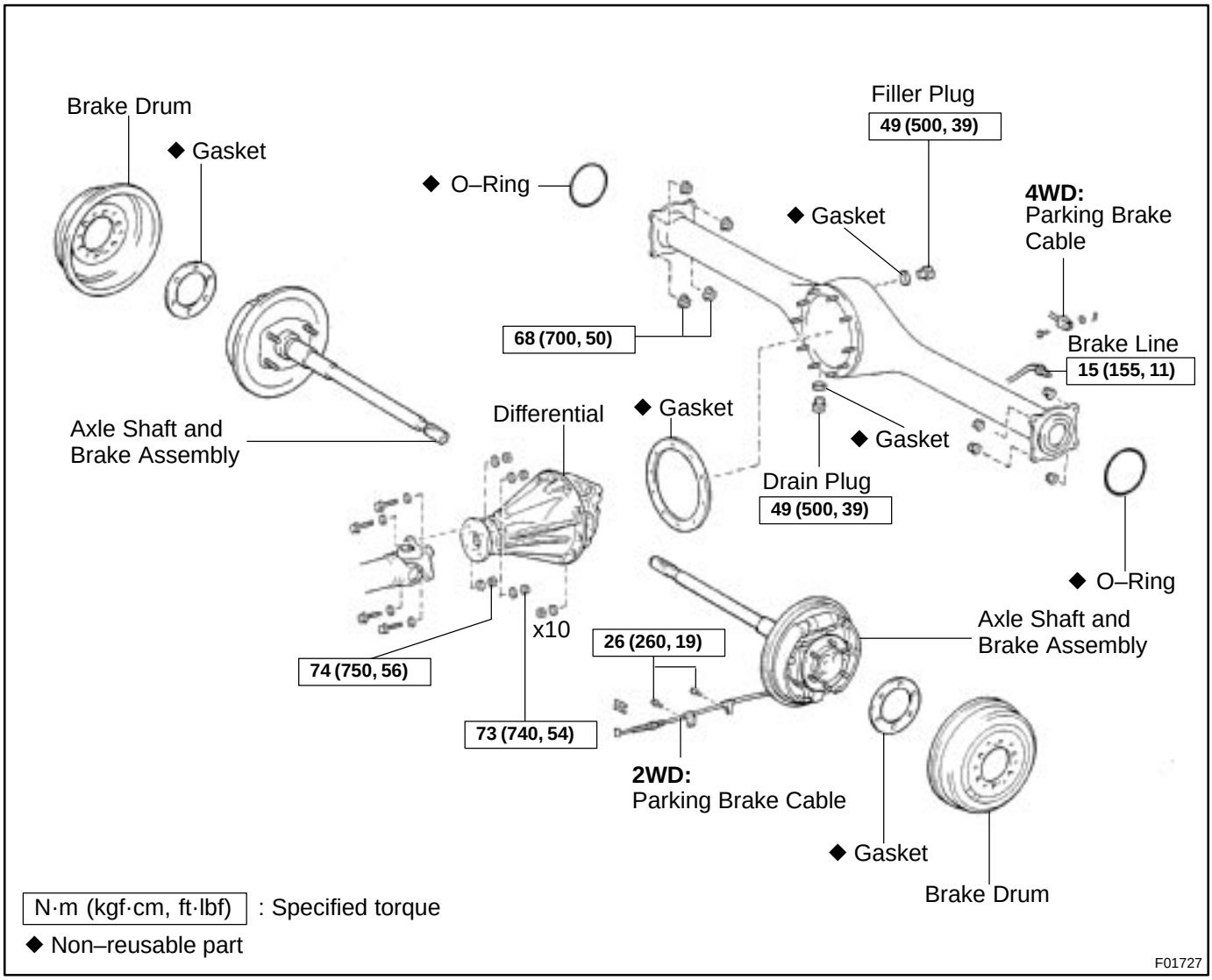

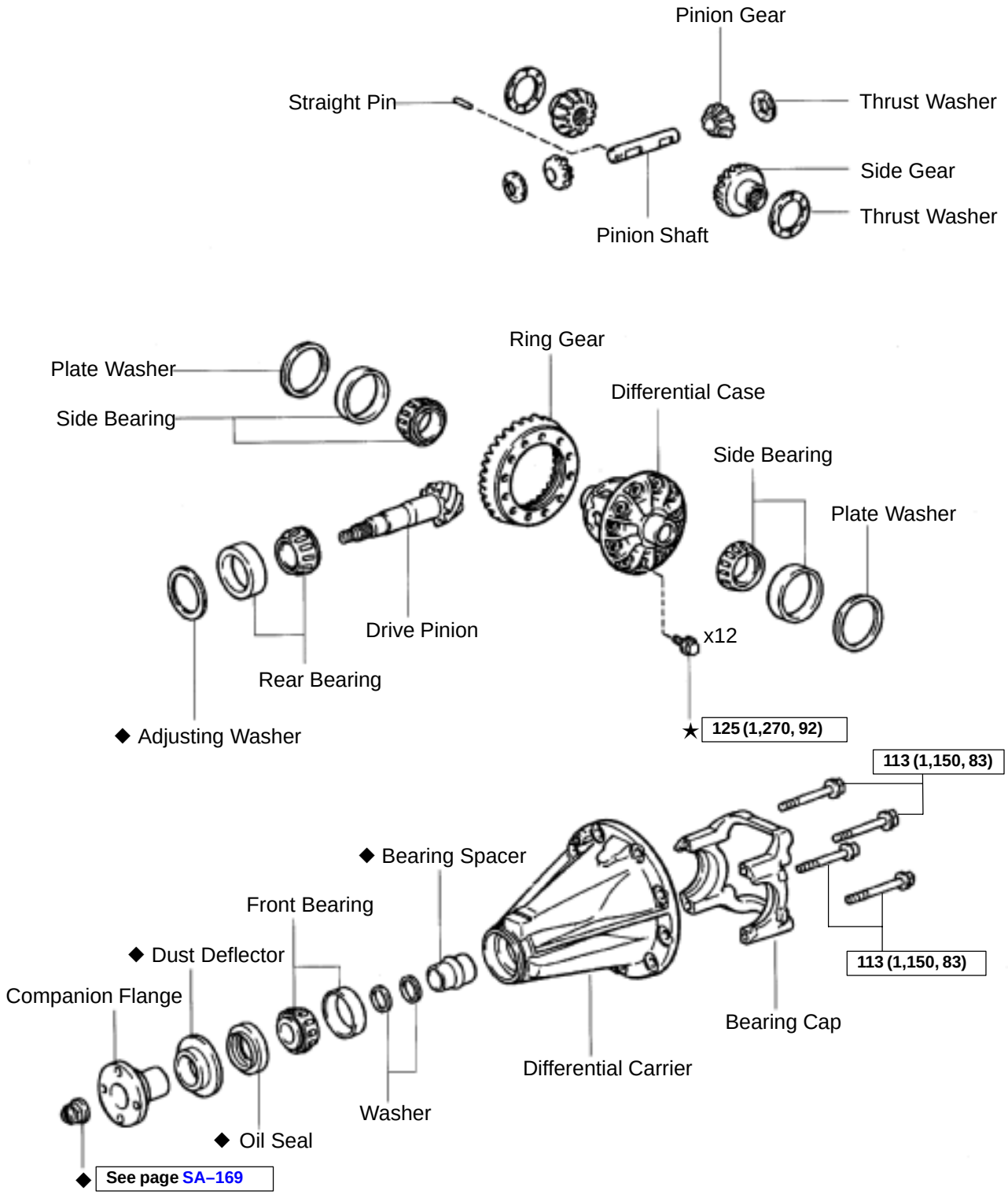

N·m (kgf·cm, ft·lbf) : Specified torque
◆ Non–reusable part
★ Precoated part

Z19299

SA0BS–02

INSTALLATION

Installation is in the reverse order of removal (See page SA–163).

HINT:

After installation, fill the differential with hypoid gear oil (See page SA–140).

SA1GD–01

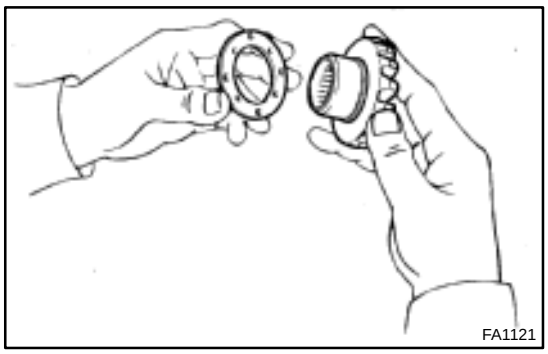
FA1121

REASSEMBLY

1. ASSEMBLE DIFFERENTIAL CASE

(a) Install the 2 thrust washer to the side gears.

HINT:

Refer to the table below to select thrust washers which will ensure that the backlash is within the specifications.

Washer thickness:

Thickness mm (in.)	Thickness mm (in.)
1.50 (0.0590)	1.75 (0.0689)
1.55 (0.0610)	1.80 (0.0709)
1.60 (0.0630)	1.85 (0.0728)
1.65 (0.0650)	1.90 (0.0748)
1.70 (0.0669)	–

(b) Install the 2 side gears with the thrust washers, 2 pinion gears, 2 pinion gear thrust washers and pinion shaft.

HINT:

Align the holes of the differential case and pinion shaft.

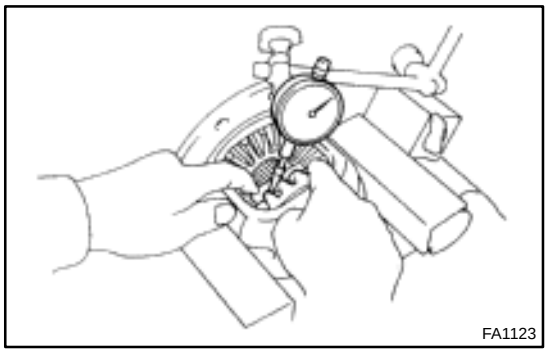
FA1123

(c) Using a dial indicator, measure the side gear backlash with holding one pinion gear toward the differential case.

Backlash: 0.05 – 0.20 mm (0.0020 – 0.0079 in.)

If the backlash is not within the specified value, select an appropriate thickness for the side gear thrust washer.

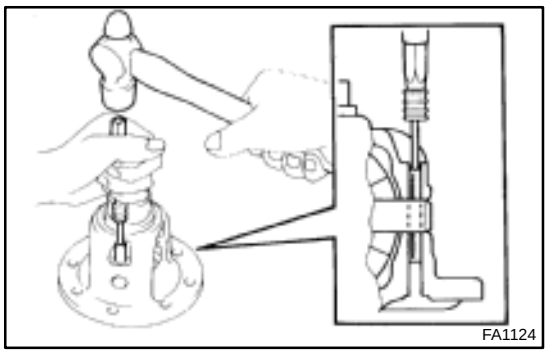
FA1124

(d) Using a pin punch and hammer, install the straight pin through the holes in the differential case and pinion shaft.

(e) Using a chisel and hammer, stake the out side of the differential case pin hole.

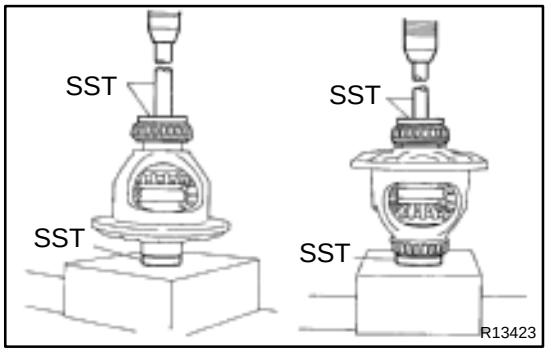

R13423

2. INSTALL SIDE BEARINGS

Using SST and a press, install the 2 side bearings into the differential case.

SST 09950–60010 (09951–00480, 09951–00640) 09950–70010 (09951–07150)

3. INSTALL RING GEAR ON DIFFERENTIAL CASE

(a) Clean the contact surfaces of the differential case and ring gear.

(b) Heat the ring gear to about 100°C (212°F) in boiling water.

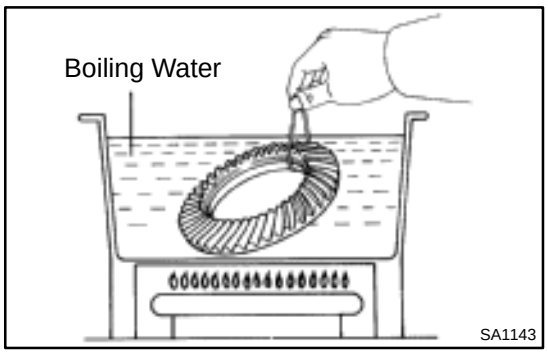

(c) Carefully take the ring gear out of the boiling water.

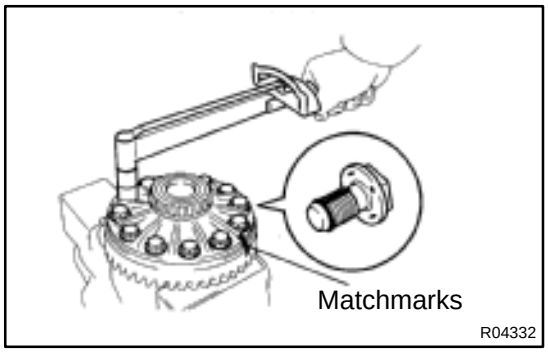

(d) After the moisture on the ring gear has completely evaporated, quickly install the ring gear to the differential case.

HINT:

Align the matchmarks on the ring gear and differential case.

(e) After the ring gear cools down enough, torque the set bolts to which thread lock has been applied.

Thread lock:

Part No. 08833–00100, THREE BOND 1360K or equivalent.

Torque: 125 N·m (1,270 kgf·cm, 92 ft·lbf)

4. INSPECT RING GEAR RUNOUT

(a) Install the differential case into the carrier and install the plate washers to where there is no play in the bearing (See step 8.).

(b) Install the bearing cap (See step 11.).

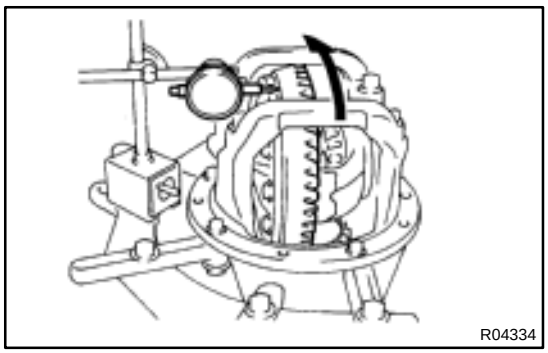

(c) Using a dial indicator, measure the runout of ring gear.

(d) Remove the bearing caps and differential case.

Maximum runout: 0.05 mm (0.0020 in.)

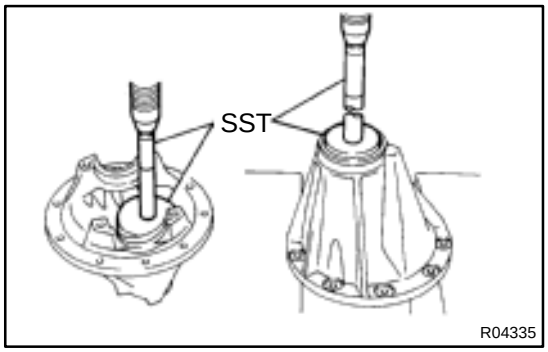

5. INSTALL DRIVE PINION BEARING OUTER RACES AND ADJUSTING WASHER

(a) Using SST and a press, install a new front bearing outer race to the carrier.

SST 09950–60020 (09951–00710),
09950–70010 (09951–07150)

(b) Using SST and a press, install a new adjusting washer and a new rear bearing outer race to the carrier.

SST 09950–60020 (09951–00910),
09950–70010 (09951–07150)

HINT:
First fit a washer with the same thickness as the washer which was removed, then after checking the tooth contact pattern, replace the washer with one of a different thickness if necessary.

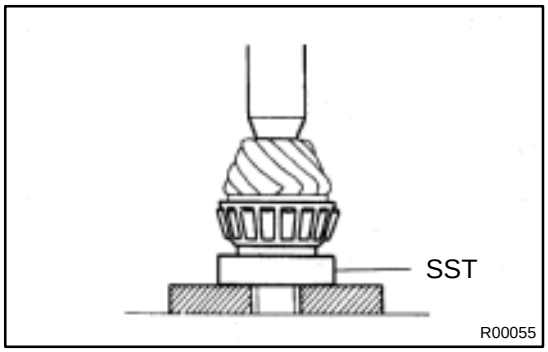

6. INSTALL DRIVE PINION REAR BEARING

Using SST and a press, install the rear bearing onto the drive pinion.

SST 09506–35010

7. TEMPORARILY ADJUST DRIVE PINION PRELOAD

(a) Install the drive pinion and front bearing.

HINT:
Assemble the spacer, washers and oil seal after adjusting the gear contact pattern.

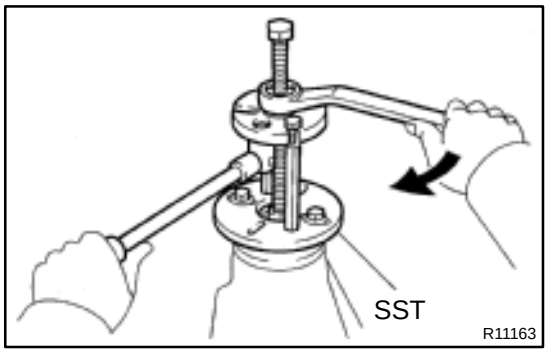

(b) Using SST, install the companion flange.
SST 09950–30011 (09951–03010, 09953–03010, 09954–03010, 09955–03030, 09956–03050)

(c) Coat the threads of the nut with hypoid gear oil.

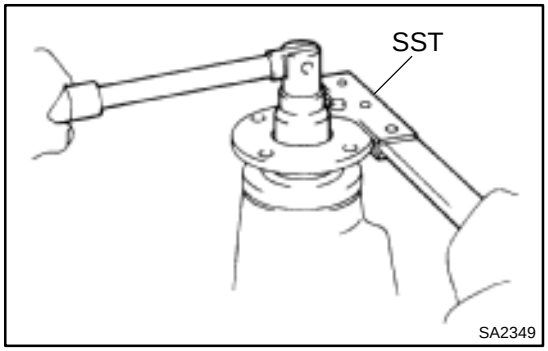

(d) Adjust the drive pinion preload by tightening the companion flange nut.

HINT:
Using SST to hold the flange, torque the nut.
SST 09330–00021

NOTICE:
As there is no spacer, tighten the nut a little at a time, being careful not to overtighten it.

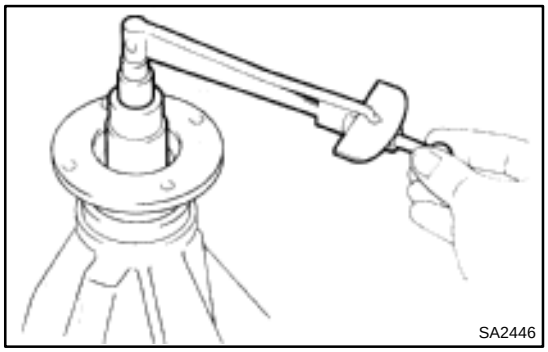

(e) Using a torque wrench, measure the preload of the drive pinion using the backlash between the drive pinion and ring gear.
Preload (at starting):
New bearing
1.1 – 1.7 N·m (12 – 18 kgf·cm, 10.0 – 15.2 in.·lbf)
Reused bearing
0.6 – 0.9 N·m (7 – 10 kgf·cm, 5.7 – 8.3 in.·lbf)

8. INSTALL DIFFERENTIAL CASE IN CARRIER

(a) Place the 2 bearing outer races on their respective bearings. Make sure the right and left races are not interchanged.

(b) Install the differential case in the carrier.

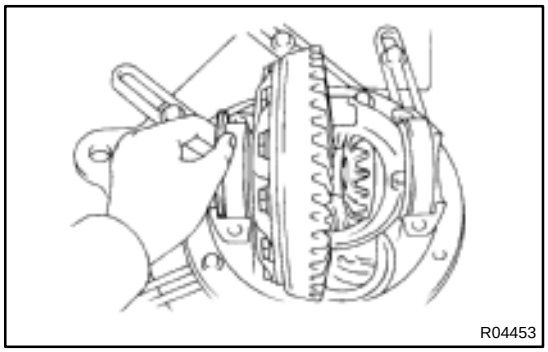

9. ADJUST RING GEAR BACKLASH

(a) Only install the plate washer on the ring gear back side.

HINT:

Make sure that the ring gear has a backlash.

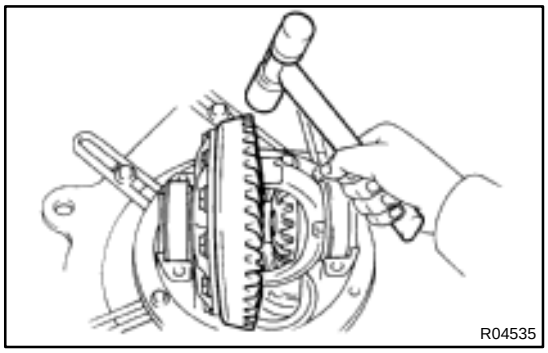

(b) Using a plastic hammer, snug down the plate washer and bearing by tapping the ring gear.

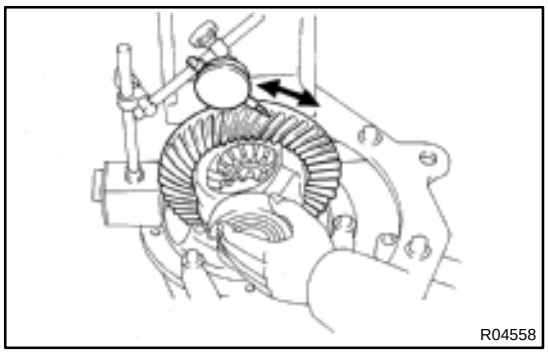

(c) Using a dial indicator, hold the side bearing boss on the teeth surface of the ring gear and measure the backlash.
Backlash (reference):
0.13 – 0.18 mm (0.0051 – 0.0071 in.)

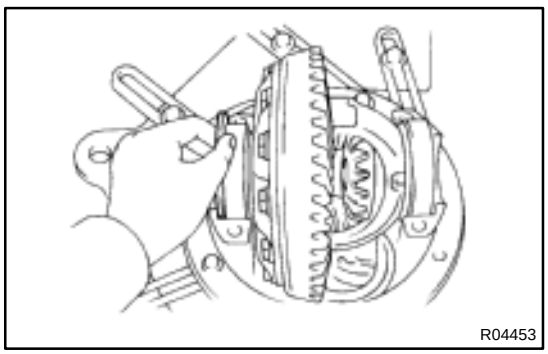

(d) Select a plate washer for back side ring gear using the backlash as reference (See page SA–169).

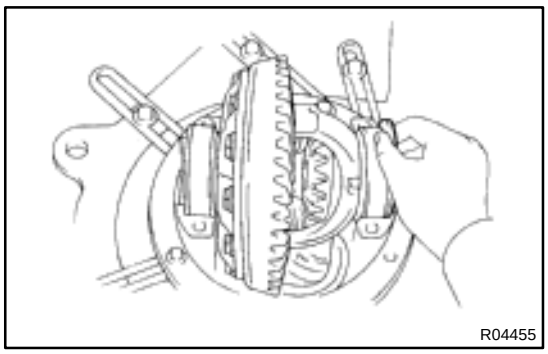
R04455

(e) Select a ring gear teeth side plate washer of a thickness which eliminates any clearance between the outer race and case.
(f) Remove the 2 plate washers and differential case.
(g) Install the plate washer into the ring gear back side of the carrier.

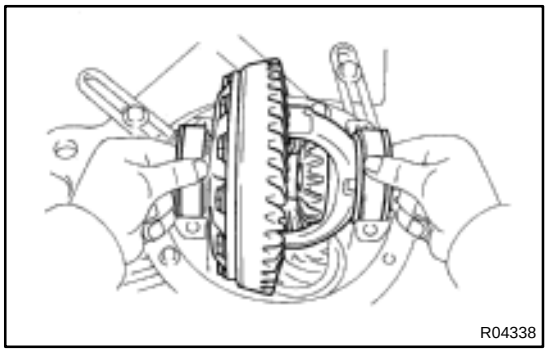
R04338

(h) Place the other plate washer onto the differential case together with the outer race, and install the differential case with the outer race into the carrier.
(i) Using a plastic hammer, snug down the washer and bearing by tapping the ring gear.

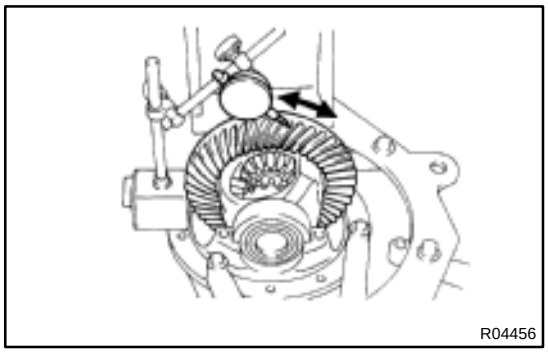
R04456

(j) Using a dial indicator, measure the ring gear backlash.
Backlash: 0.13 – 0.18 mm (0.0051 – 0.0071 in.)
(k) If the backlash is not within the specified value, adjust by either increasing or decreasing the thickness of washers on both sides by an equal amount.

HINT:
There should be no clearance between the plate washer and the case.
Make sure that there is a ring gear backlash.

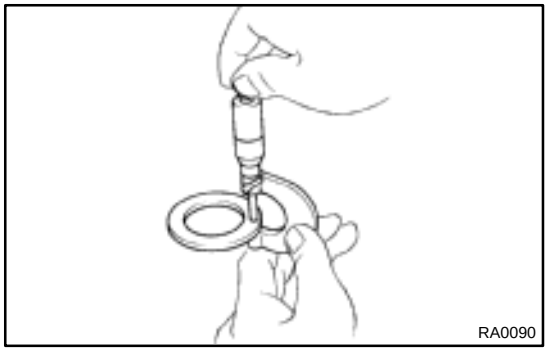
RA0090

10. ADJUST SIDE BEARING PRELOAD
(a) After adjustment with the backlash as reference, remove the ring gear teeth side plate washer and measure the thickness.
(b) Install a new washer of 0.06 – 0.09 mm (0.0024 – 0.0035 in.) thicker than the washer which was removed.

HINT:
Select a washer which can be pressed in 2/3 of the way by finger.

(c) Using a plastic hammer, install the plate washer.
(d) Recheck the ring gear backlash.
Backlash: 0.13 – 0.18 mm (0.0051 – 0.0071 in.)
(e) If the backlash is not within the specification, adjust by either increasing or decreasing the thickness of washers on both sides by equal amount.

HINT:
The backlash will change by about 0.20 mm (0.0079 in.) with every 0.03 mm (0.0012 in.) change in the side washer.

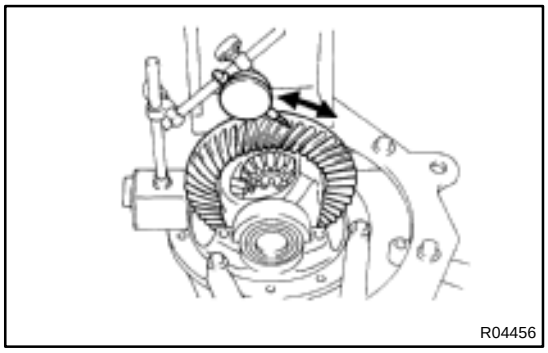
R04456

Washer thickness:

Mark	Thickness mm (in.)	Mark	Thickness mm (in.)	Mark	Thickness mm (in.)
58	2.58 (0.1015)	90	2.90 (0.1142)	22	3.22 (0.1268)
60	2.60 (0.1024)	92	2.92 (0.1150)	24	3.24 (0.1276)
62	2.62 (0.1031)	94	2.94 (0.1157)	26	3.26 (0.1283)
64	2.64 (0.1039)	96	2.96 (0.1165)	28	3.28 (0.1291)
66	2.66 (0.1047)	98	2.98 (0.1173)	30	3.30 (0.1299)
68	2.68 (0.1055)	00	3.00 (0.1181)	32	3.32 (0.1307)
70	2.70 (0.1063)	02	3.02 (0.1189)	34	3.34 (0.1315)
72	2.72 (0.1071)	04	3.04 (0.1197)	36	3.36 (0.1323)
74	2.74 (0.1079)	06	3.06 (0.1205)	38	3.38 (0.1331)
76	2.76 (0.1087)	08	3.08 (0.1213)	40	3.40 (0.1339)
78	2.78 (0.1094)	10	3.10 (0.1220)	42	3.42 (0.1346)
80	2.80 (0.1102)	12	3.12 (0.1228)	44	3.44 (0.1354)
82	2.82 (0.1110)	14	3.14 (0.1236)	46	3.46 (0.1362)
84	2.84 (0.1118)	16	3.16 (0.1244)	48	3.48 (0.1370)
86	2.86 (0.1126)	18	3.18 (0.1252)	–	
88	2.88 (0.1134)	20	3.20 (0.1260)	–	

11. INSTALL SIDE BEARING CAP

(a) Align the matchmarks on the cap and carrier.

(b) Install and torque the 4 bolts.

Torque: 113 N·m (1,150 kgf·cm, 83 ft·lbf)

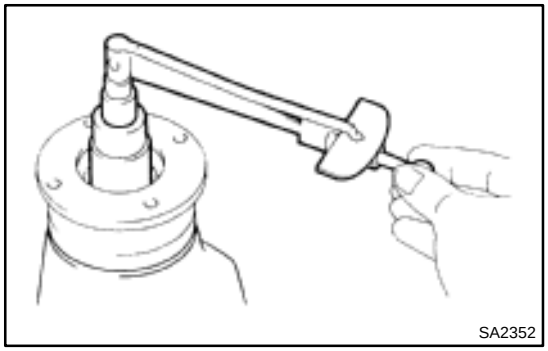
SA2352

12. MEASURE TOTAL PRELOAD

Using a torque wrench, measure the total preload with the teeth of the drive pinion and ring gear in contact.

Total preload (at starting):
Drive pinion preload plus
0.4 – 0.6 N·m (4 – 6 kgf·cm, 3.5 – 5.2 in.·lbf)

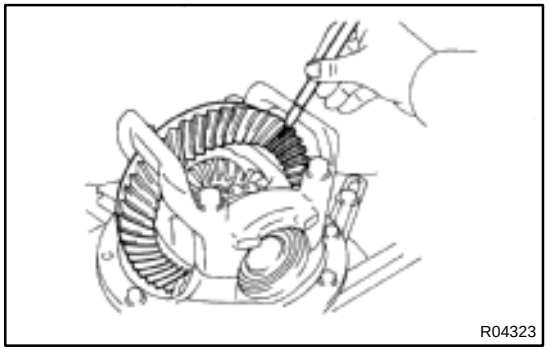
R04323

13. INSPECT TOOTH CONTACT BETWEEN RING GEAR AND DRIVE PINION

(a) Coat 3 or 4 teeth at three different positions on the ring gear with red lead primer.

(b) Hold the companion flange firmly and rotate the ring gear in both directions.

(c) Inspect the teeth pattern.

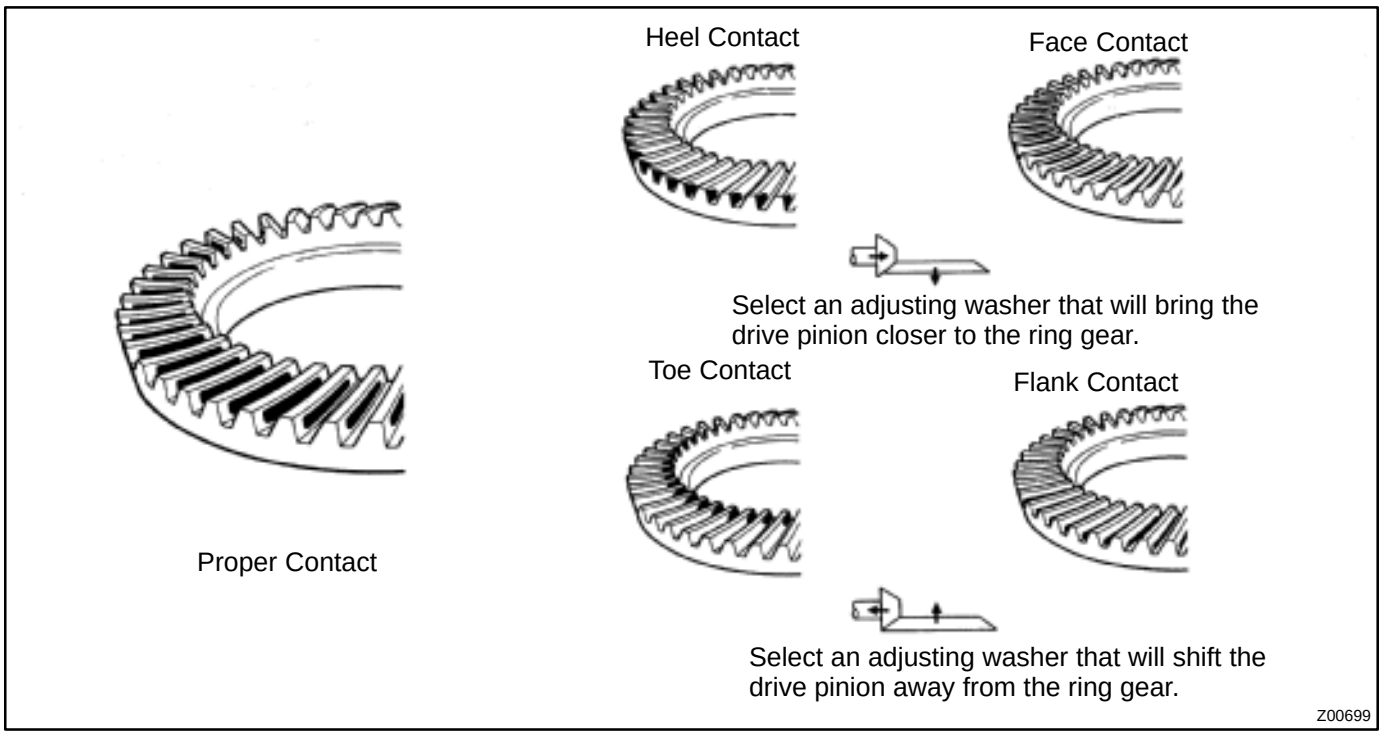

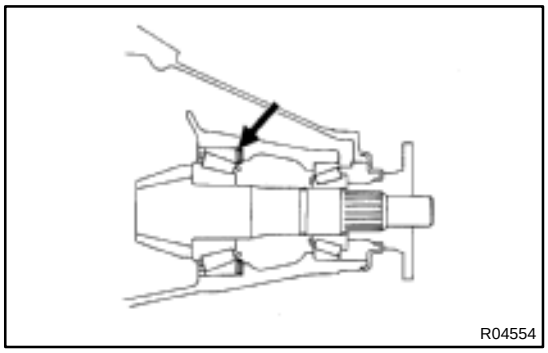

If the teeth are not contacting properly, use the following chart to select a proper washer for correction.

Washer thickness:

Mark	Thickness mm (in.)	Mark	Thickness mm (in.)	Mark	Thickness mm (in.)
87	1.87 (0.0736)	01	2.01 (0.0791)	15	2.15 (0.0846)
88	1.88 (0.0740)	02	2.02 (0.0795)	16	2.16 (0.0850)
89	1.89 (0.0744)	03	2.03 (0.0799)	17	2.17 (0.0854)
90	1.90 (0.0748)	04	2.04 (0.0803)	18	2.18 (0.0858)
91	1.91 (0.0752)	05	2.05 (0.0807)	19	2.19 (0.0862)
92	1.92 (0.0756)	06	2.06 (0.0811)	20	2.20 (0.0866)
93	1.93 (0.0760)	07	2.07 (0.0815)	21	2.21 (0.0870)
94	1.94 (0.0764)	08	2.08 (0.0819)	22	2.22 (0.0874)
95	1.95 (0.0768)	09	2.09 (0.0823)	23	2.23 (0.0878)
96	1.96 (0.0772)	10	2.10 (0.0827)	24	2.24 (0.0882)
97	1.97 (0.0776)	11	2.11 (0.0831)	25	2.25 (0.0886)
98	1.98 (0.0780)	12	2.12 (0.0835)	26	2.26 (0.0890)
99	1.99 (0.0783)	13	2.13 (0.0839)	27	2.27 (0.0894)
00	2.00 (0.0787)	14	2.14 (0.0843)	28	2.28 (0.0898)

14. REMOVE COMPANION FLANGE (See page SA–163)

15. REMOVE FRONT BEARING (See page SA–163)

16. INSTALL NEW BEARING SPACER, 2 WASHERS AND FRONT BEARING

(a) Install a new bearing spacer and 2 washers, and place the front bearing.

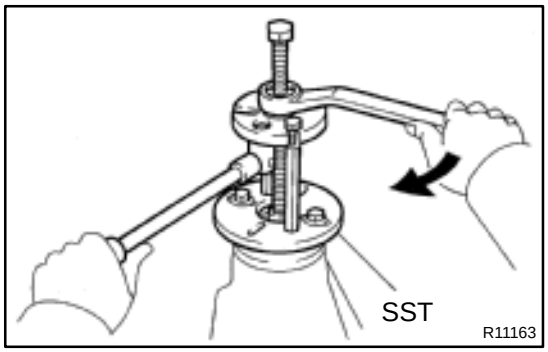

(b) Using SST and the companion flange, install the front bearing then remove the companion flange.

SST 09950–30011 (09951–03010, 09953–03010, 09954–03010, 09955–03030, 09956–03050)

17. INSTALL NEW OIL SEAL

(a) Coat a new oil seal lip with MP grease.

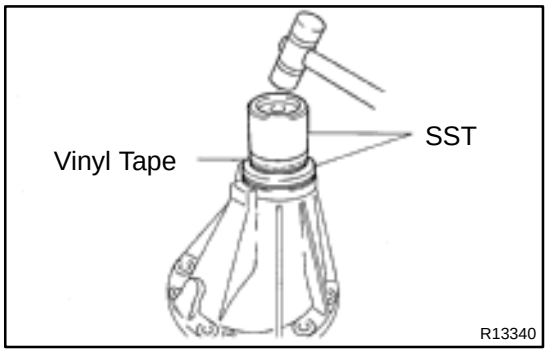

(b) Using SST and a plastic hammer, install the oil seal until its surface is flush with the differential carrier end.

SST 09316–12010, 09649–17010

HINT:

Connect SST with vinyl tape.

18. INSTALL COMPANION FLANGE

(a) Place the companion flange.

(b) Coat the threads of a new nut with hypoid gear oil.

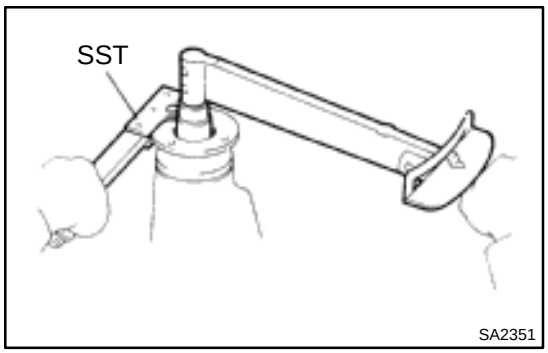

(c) Using SST to hold the flange, torque the nut.

SST 09330–00021

Torque: 147 N·m (1,500 kgf·cm, 109 ft·lbf)

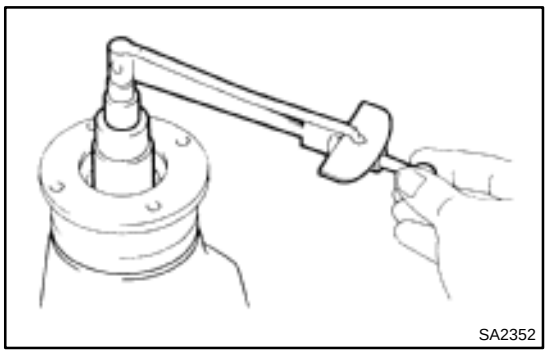

19. ADJUST DRIVE PINION PRELOAD

Using a torque wrench, measure the preload of the drive pinion using the backlash between the drive pinion and ring gear.

Preload (at starting):
New bearing
1.1 – 1.7 N·m (12 – 18 kgf·cm, 10.0 – 15.2 in.·lbf)
Reused bearing
0.6 – 0.9 N·m (7 – 10 kgf·cm, 5.7 – 8.3 in.·lbf)

If the preload is greater than the specified value, replace the bearing spacer.

If the preload is less than the specified value, retighten the nut 13 N·m (130 kgf·cm, 9 ft·lbf) a little at a time until the specified preload is reached.

Torque: 451 N·m (4,600 kgf·cm, 333 ft·lbf) or less

If the maximum torque is exceeded while retightening the nut, replace the bearing spacer and repeat the preload adjusting procedure. Do not loosen the pinion nut to reduce the preload.

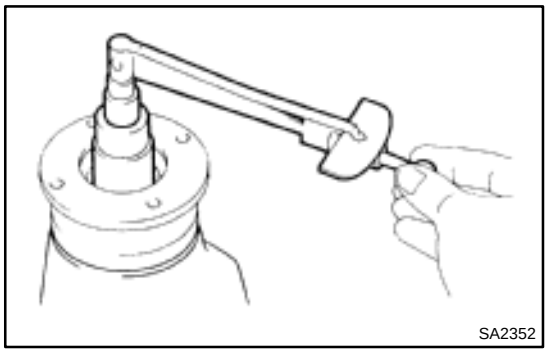

20. CHECK TOTAL PRELOAD

Using a torque wrench, measure the total preload with the teeth of the drive pinion and ring gear in contact.

Total preload (at starting):
Drive pinion preload plus
0.4 – 0.6 N·m (4 – 6 kgf·cm, 3.5 – 5.2 in.·lbf)

21. CHECK RING GEAR BACKLASH

Using a dial indicator, measure the ring gear backlash.

Backlash: 0.13 – 0.18 mm (0.0051 – 0.0071 in.)

22. RECHECK TOOTH CONTACT BETWEEN RING GEAR AND DRIVE PINION (See step 13.)

23. CHECK COMPANION FLANGE RUNOUT
(See page SA–164)

24. STAKE DRIVE PINION NUT

SA0BO–02

REMOVAL

1. DRAIN HYPOID GEAR OIL

2. REMOVE REAR AXLE SHAFTS (See page SA–133)

3. DISCONNECT REAR PROPELLER SHAFT

2WD: See page PR–3

4WD and pre runner: See page PR–11

4. REMOVE DIFFERENTIAL CARRIER ASSEMBLY

(a) Remove the 10 nuts, washers and differential carrier assembly.

NOTICE:

Be careful not to damage the installation surface.

Torque: 73 N·m (740 kgf·cm, 54 ft·lbf)

(b) Remove the gasket.

SA0BQ–02

REPLACEMENT

REPLACE COMPANION FLANGE DUST DEFLECTOR

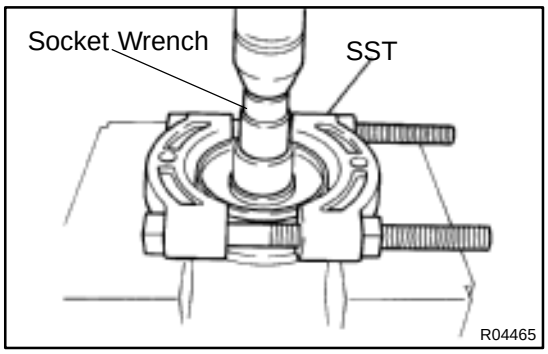

(a) Using SST, a socket wrench and a press, remove the dust deflector.
SST 09950–00020

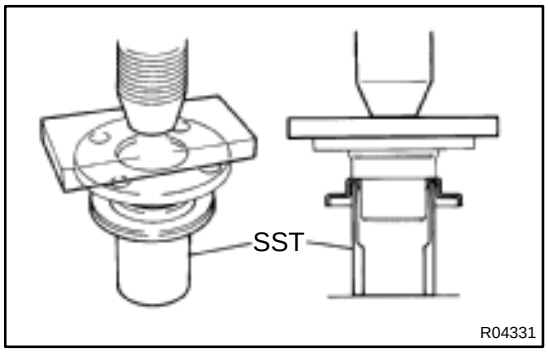

(b) Using SST and a press, install a new dust deflector.
SST 09523–36010

REAR DIFFERENTIAL FRONT OIL SEAL

SA0BD–03

COMPONENTS

HINT:

Pre runner is the model described below.

RZN191L–TRPDKAB, RZN196L–CRPDKAB, VZN195L–CRPDKAB

2RZ–FE,
3RZ–FE, 5VZ–FE w/ Diff. lock:

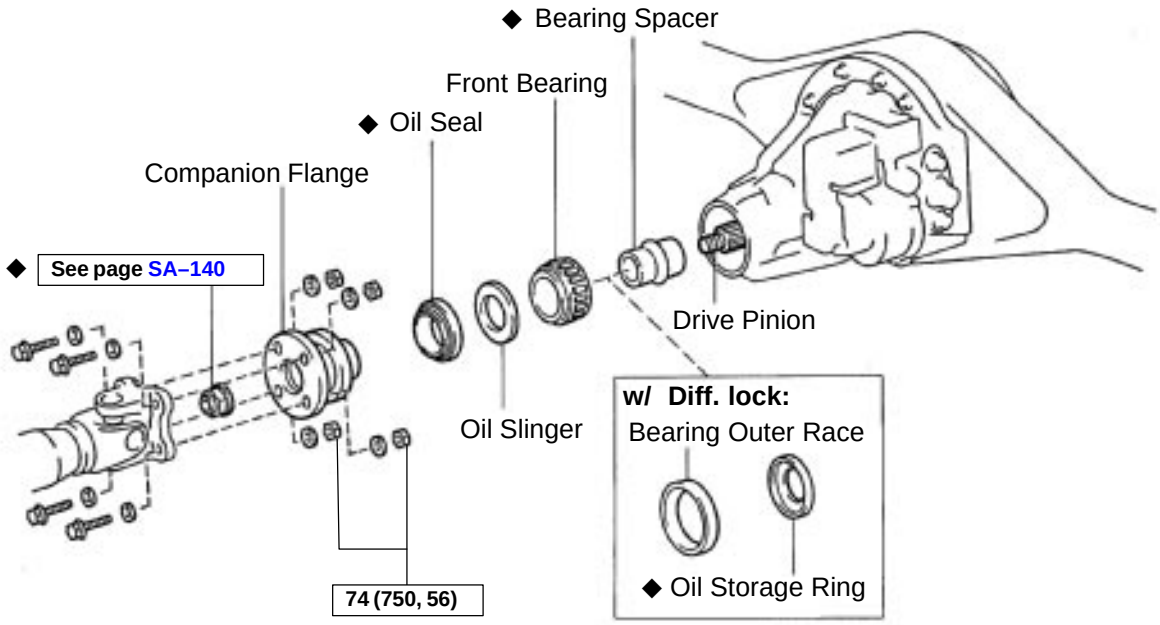

3RZ–FE, 5VZ–FE w/o Diff. lock:

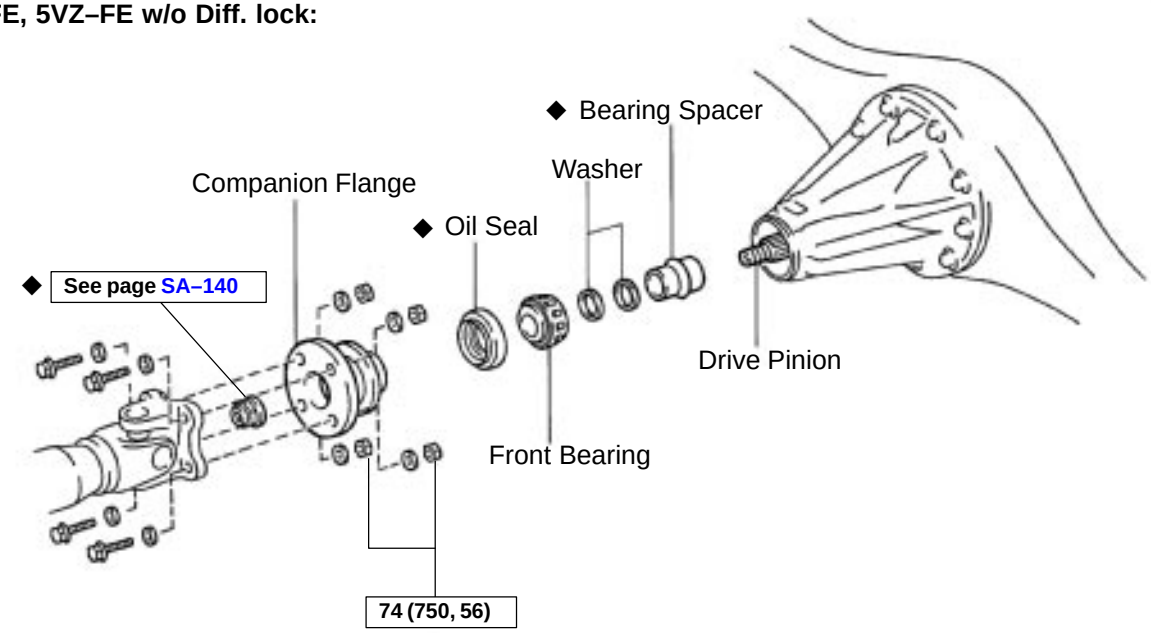

N·m (kgf·cm, ft·lbf) : Specified torque

◆ Non–reusable part

Z19300

SA0BE–03

REPLACEMENT

1. DRAIN DIFFERENTIAL OIL

2. DISCONNECT REAR PROPELLER SHAFT

2WD: See page PR–3

4WD and prerunner: See page PR–11

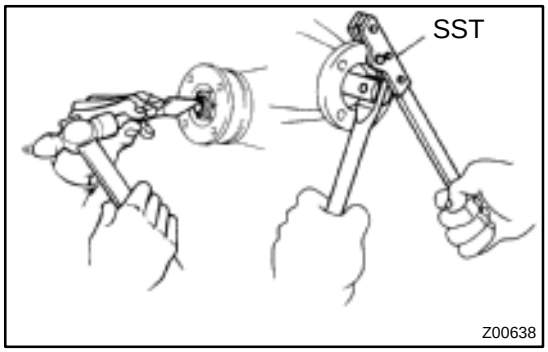

3. REMOVE COMPANION FLANGE

(a) Using a chisel and hammer, loosen the staked part of the nut.

(b) Using SST to hold the flange, remove the nut.

SST 09330–00021

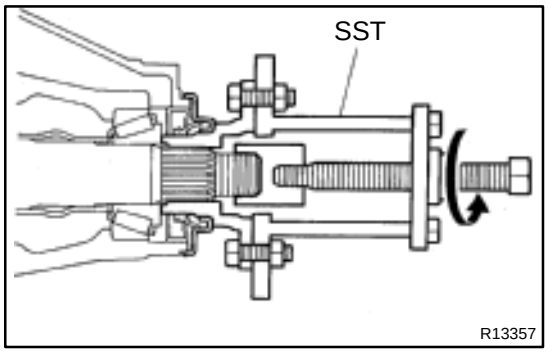

(c) Using SST, remove the companion flange.

SST 09950–30011 (09951–03010, 09953–03010, 09954–03010, 09955–03030, 09956–03020, 09956–03050)

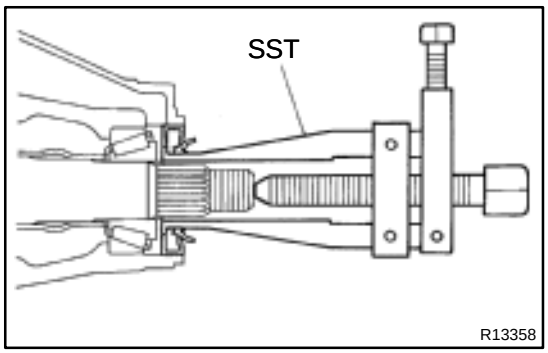

4. REMOVE OIL SEAL

Using SST, remove the oil seal.

SST 09350–32014 (09308–10010)

5. Except 3RZ–FE, 5VZ–FE w/o Diff. lock: REMOVE OIL SLINGER

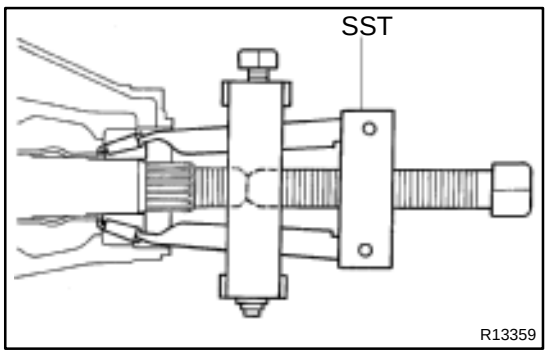

6. REMOVE FRONT BEARING

Using SST, remove the front bearing from the drive pinion.

SST 09556–22010

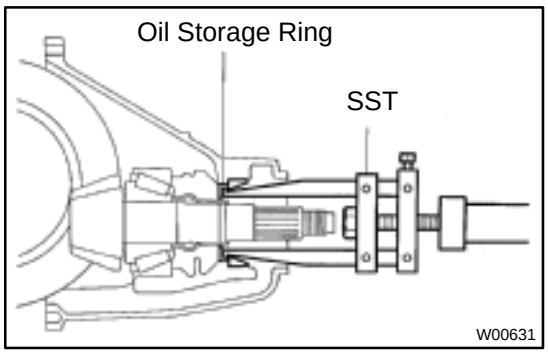

7. 3RZ–FE, 5VZ–FE w/ Diff. lock:
REMOVE FRONT BEARING OUTER RACE AND OIL STORAGE RING

(a) Using SST, remove the front bearing outer race.
SST 09308–00010

(b) Using a screwdriver, bend the oil storage ring and remove it.

8. REMOVE BEARING SPACER

(a) 3RZ–FE, 5VZ–FE w/o Diff. lock:
Remove the 2 washers.

(b) Remove the bearing spacer.

9. INSTALL NEW BEARING SPACER

(a) Install a new bearing spacer.

(b) 3RZ–FE, 5VZ–FE w/o Diff. lock:
Install the 2 washers.

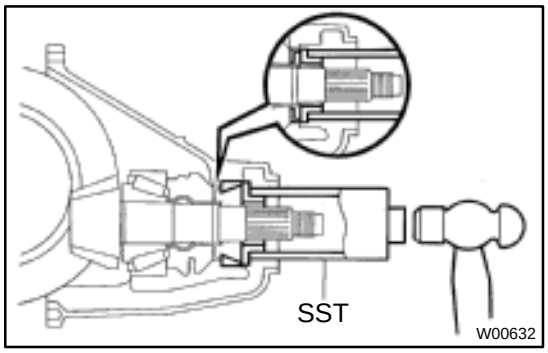

10. 3RZ–FE, 5VZ–FE w/ Diff. lock:
INSTALL OIL STORAGE RING AND FRONT BEARING OUTER RACE

(a) Using SST and a hammer, install a new oil storage ring.
SST 09316–60011 (09316–00011, 09316–00021)

(b) Using SST and a hammer, install the front bearing outer race.
SST 09316–60011 (09316–00011, 09316–00021)

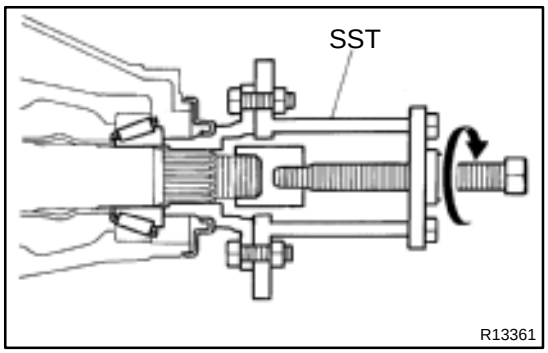

11. INSTALL FRONT BEARING

(a) Place the front bearing.

(b) Except 3RZ–FE, 5VZ–FE w/o Diff. lock:
Place the oil slinger.

(c) Using SST and the companion flange, install the front bearing then remove the companion flange.
SST 09950–30011 (09951–03010, 09953–03010, 09954–03010, 09955–03030, 09956–03020, 09956–03050)

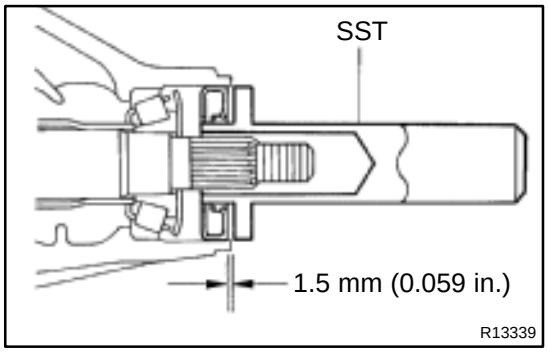

12. INSTALL NEW OIL SEAL

(a) Coat a new oil seal lip with MP grease.

(b) 2RZ–FE:
Using SST and a hammer, install the oil seal.
SST 09554–30011
Oil seal drive in depth: 1.5 mm (0.059 in.)

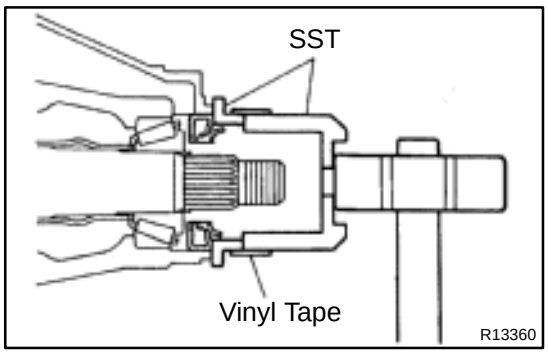

(c) 3RZ–FE, 5VZ–FE w/o Diff. lock:
Using SST and a plastic hammer, install the oil seal until its surface is flush with the differential carrier end.
SST 09316–12010, 09649–17010
Oil seal drive in depth: 0.5 mm (0.020 in.)

HINT:
Connect SST with vinyl tape.

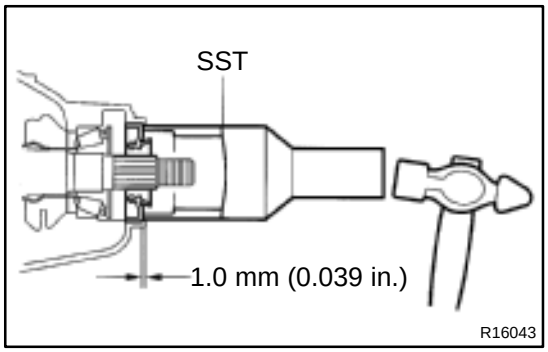

(d) 3RZ–FE, 5VZ–FE w/ Diff. lock:
Using SST and a hammer, install the oil seal.
SST 09214–76011
Oil seal drive in depth: 1.0 mm (0.039 in.)

13. INSTALL COMPANION FLANGE

(a) Place the companion flange on the drive pinion.

(b) Coat the threads of a new nut with hypoid gear oil.

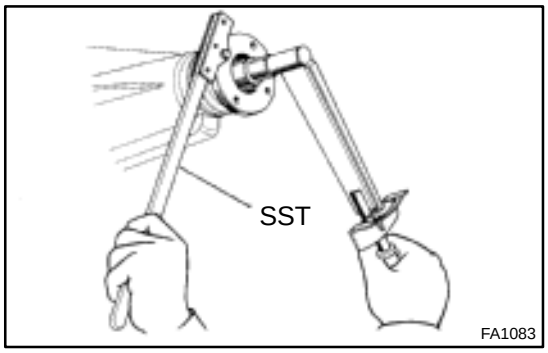

(c) Using SST to hold the flange, torque the nut.
SST 09330–00021
Torque:
2RZ–FE: 108 N·m (1,100 kgf·cm, 80 ft·lbf)
3RZ–FE, 5VZ–FE w/o Diff. lock:
147 N·m (1,500 kgf·cm, 109 ft·lbf)
3RZ–FE, 5VZ–FE w/ Diff. lock:
196 N·m (2,000 kgf·cm, 145 ft·lbf)

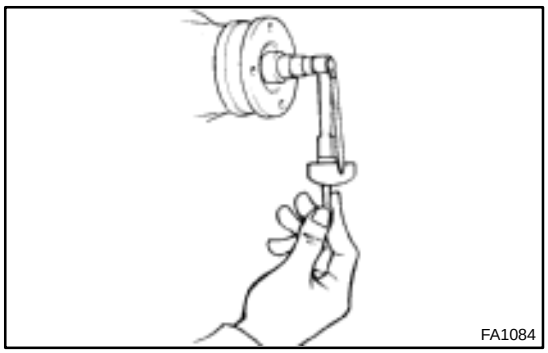

14. ADJUST DRIVE PINION PRELOAD
2RZ–FE: See page SA–152
3RZ–FE, 5VZ–FE w/o Diff. lock: See page SA–169
3RZ–FE, 5VZ–FE w/ Diff. lock: See page SA–188

15. STAKE DRIVE PINION NUT

16. CONNECT REAR PROPELLER SHAFT
2WD: See page PR–8
4WD and pre runner: See page PR–16

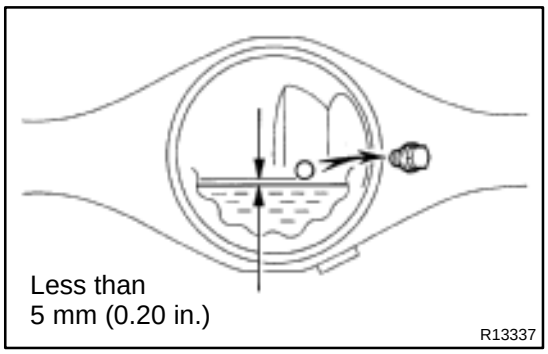

17. FILL DIFFERENTIAL WITH HYPOID GEAR OIL
Torque: 49 N·m (500 kgf·cm, 39 ft·lbf)
Oil type: Hypoid gear oil API GL–5
Recommended oil viscosity:
Above – 18˚C (0˚F) SAE 90
Below – 18˚C (0˚F) SAE 80W or 80W – 90
Capacity:

2RZ–FE	1.35 liters (1.43 US qts, 1.19 lmp. qts)
3RZ–FE, 5VZ–FE	4WD Extra long model: 2.45 liters (2.58 US qts., 2.16 lmp. qts) w/ Diff. lock Short model: 2.65 liters (2.80 US qts., 2.33 lmp. qts) w/ Diff. lock Extra long model: 2.95 liters (3.18 US qts., 2.60 lmp. qts) w/o Diff. lock: 2.55 liters (2.69 US qts., 2.24 lmp. qts)

REAR LEAF SPRING

SA0C2–03

COMPONENTS

HINT:

Pre runner is the model described below.

RZN191L–TRPDKAB, RZN196L–CRPDKAB, VZN195L–CRPDKAB

2WD:

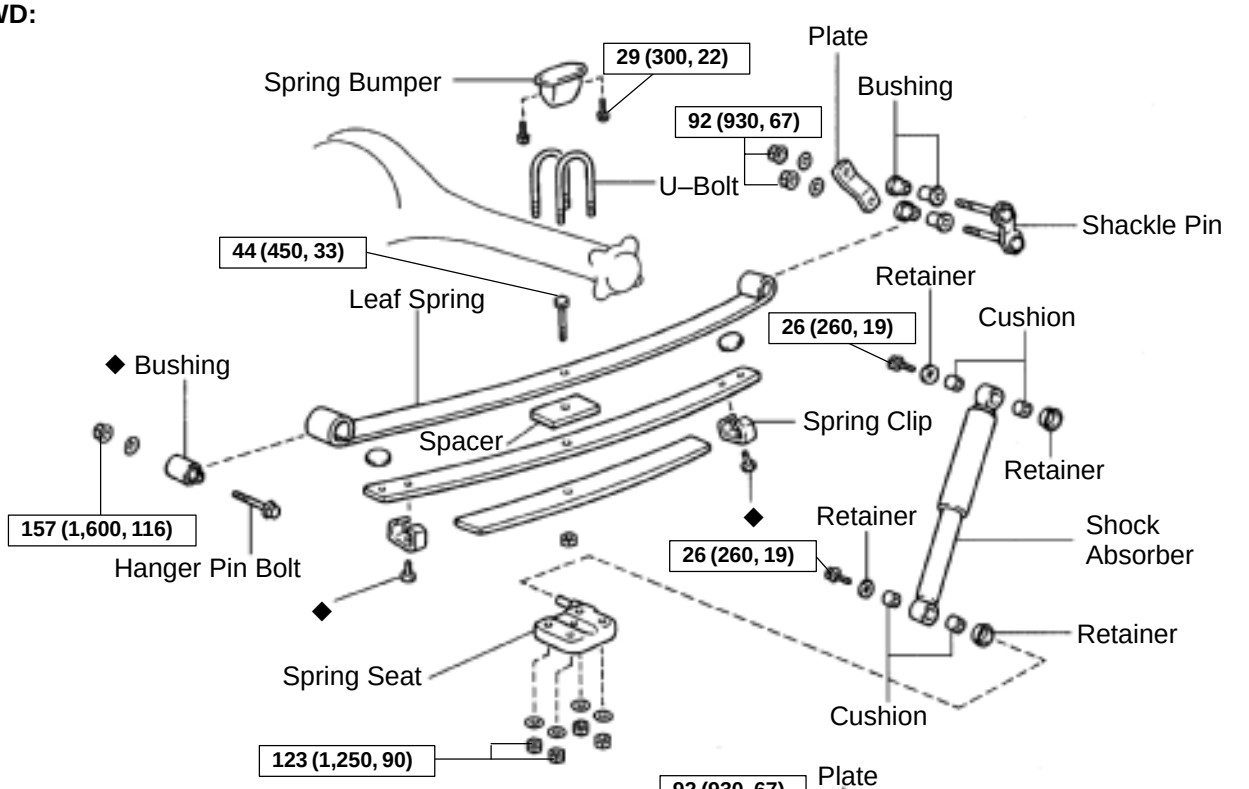

4WD and pre runner:

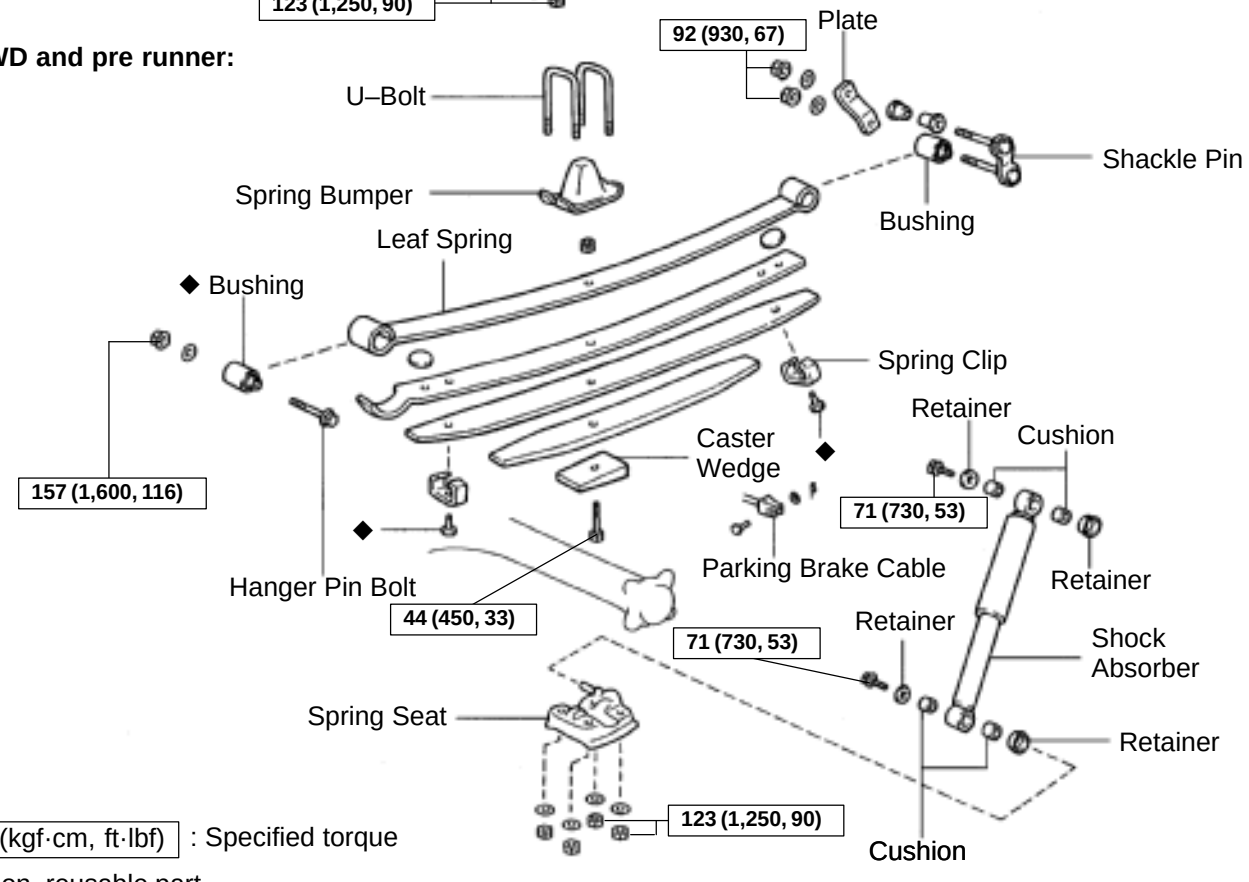

N·m (kgf·cm, ft·lbf) : Specified torque

◆ Non–reusable part

W04110

SA0C5–01

INSTALLATION

Installation is in the reverse order of removal (See page SA–212).

SA0C3–04

REMOVAL

1. SUPPORT BODY WITH SAFETY STANDS

(a) Jack up and support the body on safety stands.

(b) Lower the axle housing until the leaf spring tension is free, and keep it at this position.

2. REMOVE REAR WHEEL

Torque: 110 N·m (1,150 kgf·cm, 83 ft·lbf)

3. 4WD:

DISCONNECT PARKING BRAKE CABLE

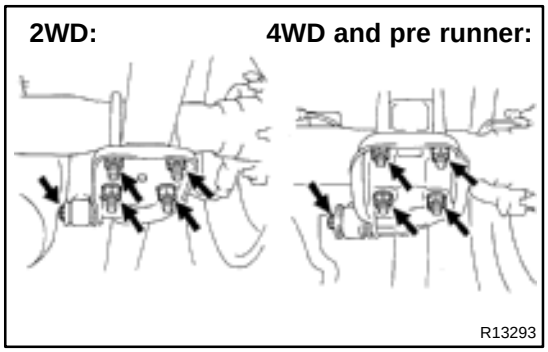

4. DISCONNECT REAR SHOCK ABSORBER

Remove the bolt and disconnect the shock absorber from the spring seat.

Torque:

2WD: 26 N·m (260 kgf·cm, 19 ft·lbf)

4WD and pre runner: 71 N·m (730 kgf·cm, 53 ft·lbf)

5. REMOVE U–BOLTS

(a) Remove the 4 U–bolt mounting nuts and washers.

(b) Remove the spring seat and U–bolts.

Torque: 123 N·m (1,250 kgf·cm, 90 ft·lbf)

HINT:

At the time of installation, tighten the U–bolts so that the length of all the U–bolts under the spring seat is the same.

(c) 4WD and pre runner:

Remove the spring bumper.

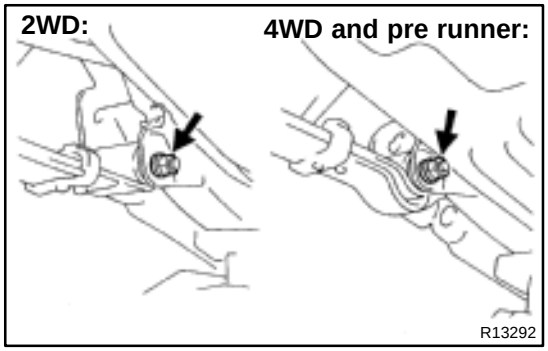

6. REMOVE LEAF SPRING

(a) Remove the nut, washer and hanger pin bolt.

Torque: 157 N·m (1,600 kgf·cm, 116 ft·lbf)

HINT:

At the time of installation, after stabilizing the suspension, torque the nut.

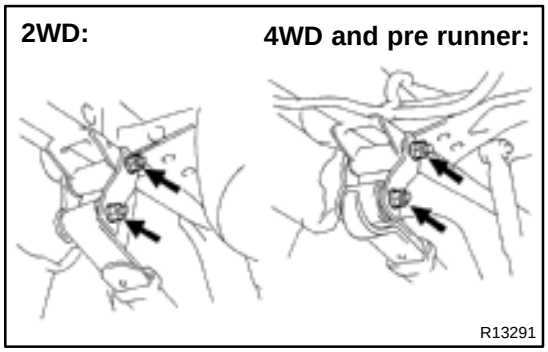

(b) Remove the 2 shackle pin mounting nuts and washers.

Torque: 92 N·m (930 kgf·cm, 67 ft·lbf)

HINT:

At the time of installation, after stabilizing the suspension, torque the nut.

(c) Remove the shackle pin, plate, and rear leaf spring.

SA0C4–02

REPLACEMENT

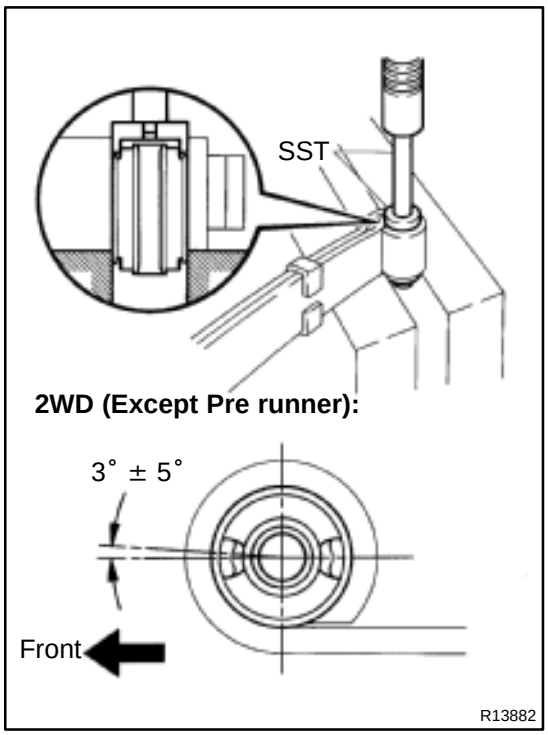

1. REPLACE EYE BUSHING

Using SST and a press, replace the bushing.

SST 09550–10013 (09252–10010, 09553–10010)

HINT:

2WD (Except pre runner):

When installing the bushing, as shown in the illustration.

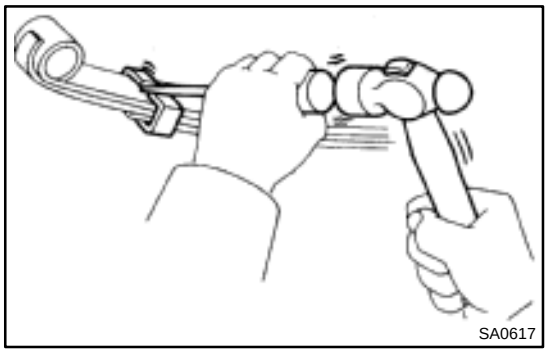

2. REPLACE LEAF SPRING

(a) Bend to open the spring clip.

(1) Using a chisel and hammer, pry up the spring clip.

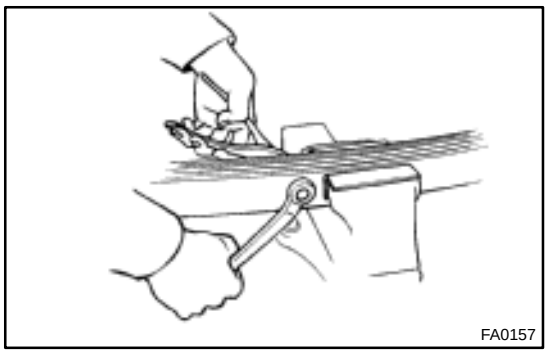

(b) Remove the center bolt.

(1) Hold the spring near the center bolt in a vise and remove the center bolt.

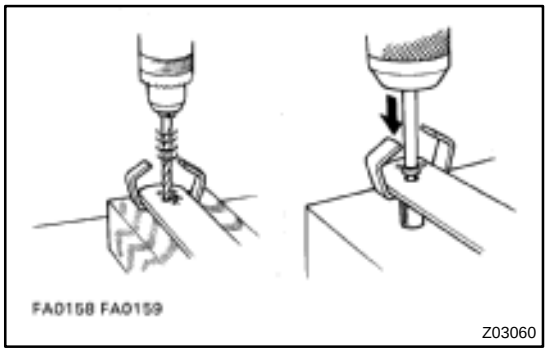

(c) Replace the spring clip.

(1) Drill off the head of the rivet and drive it out.

(2) Install a new rivet into the holes of the spring leaf and clip. Then rivet with a press.

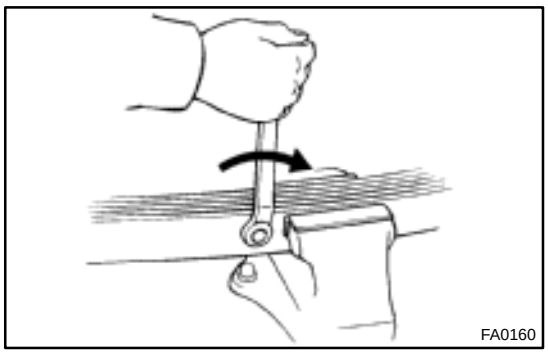

(d) Install spring center bolt.
(1) Align the leaf holes and secure the leaves with a vise.
(2) Install the spring center bolt.
Torque: 44 N·m (450 kgf·cm, 33 ft·lbf)

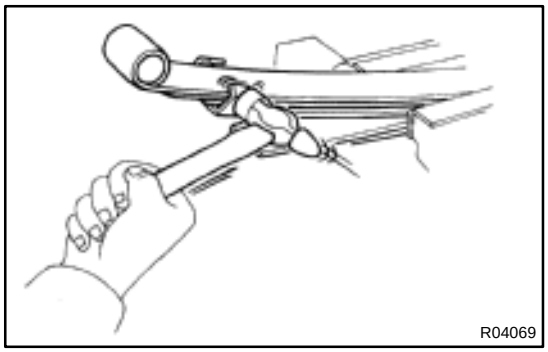

(e) Bend the spring clip.
(1) Using a hammer, bend the spring clip into the position.

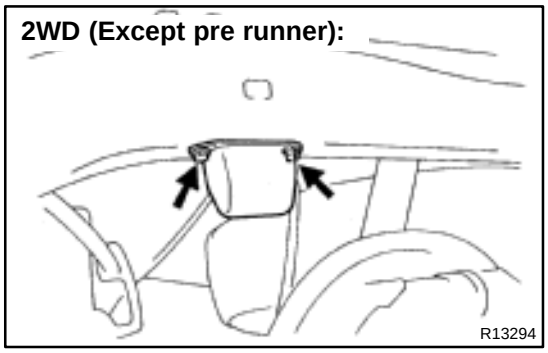

3. 2WD (Except pre runner): REPLACE SPRING BUMPER

(a) Remove the 2 bolts and spring bumper.
(b) Install the 2 bolts and spring bumper.
Torque: 29 N·m (300 kgf·cm, 22 ft·lbf)

REAR SHOCK ABSORBER

SA0BX–04

COMPONENTS

HINT:

Pre runner is the model described below.

RZN191L–TRPDKAB, RZN196L–CRPDKAB, VZN195L–CRPDKAB

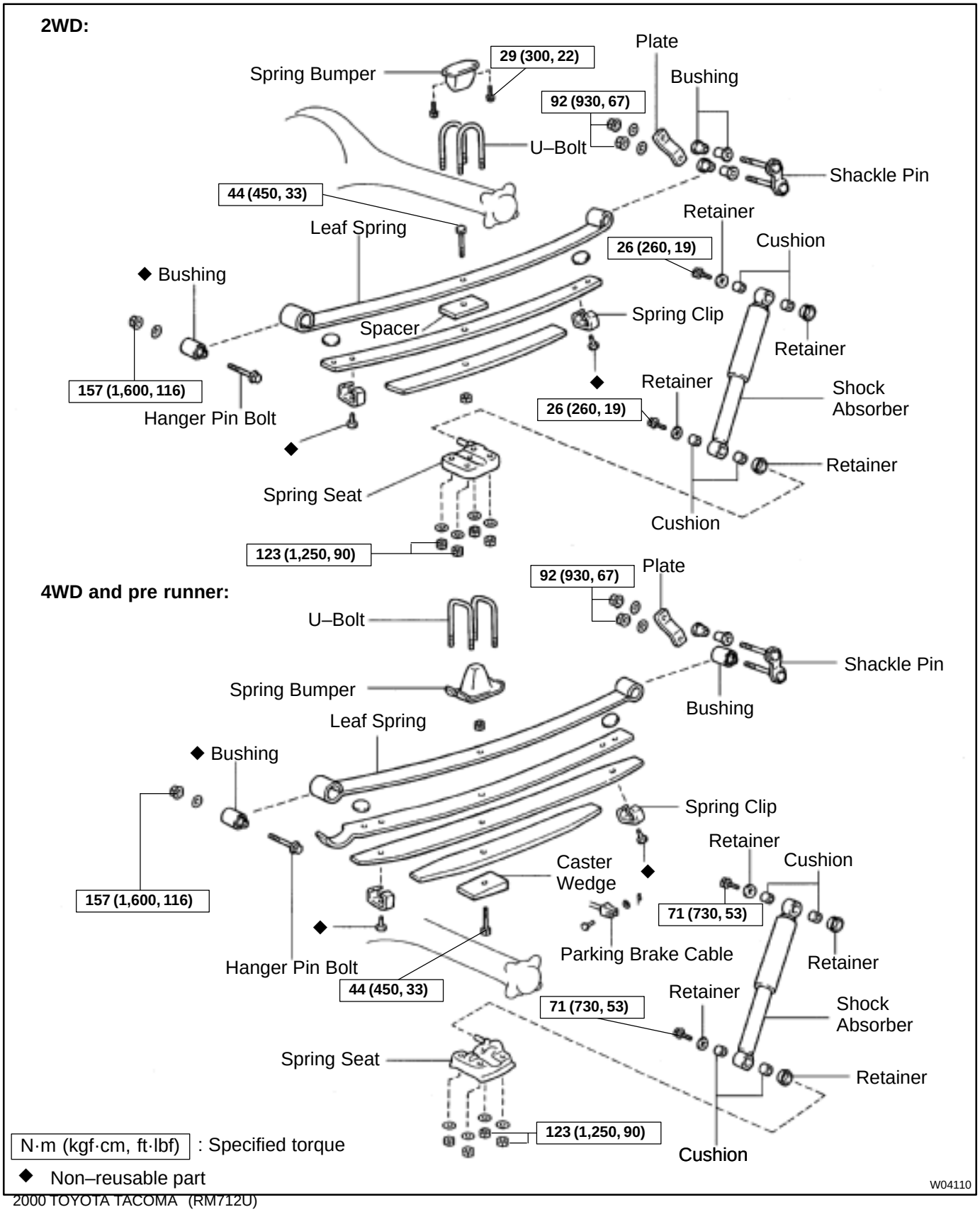

SA0C0–03

DISPOSAL

1. FULLY EXTEND SHOCK ABSORBER ROD

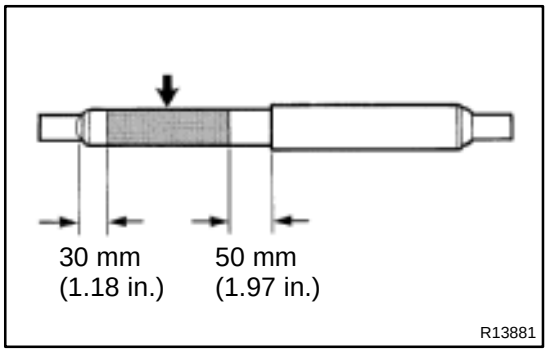

2. DRILL HOLE TO REMOVE GAS FROM CYLINDER

Using a drill, make a hole in the cylinder, as shown in the illustration to remove the gas inside.

CAUTION:

The discharged gas is harmless, but be careful of chips which may fly up when drilling.

SA0BZ–03

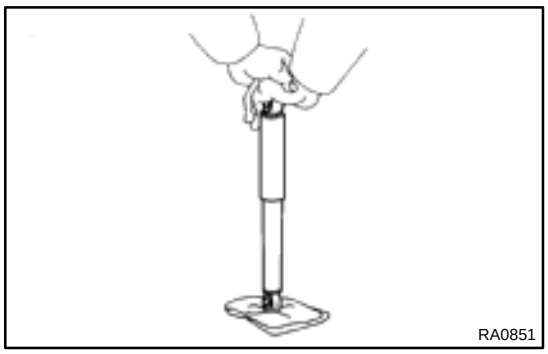
RA0851

INSPECTION

INSPECT SHOCK ABSORBER

Compress and extend the shock absorber rod and check that there is no abnormal resistance or unusual operation sounds. If there is any abnormality, replace the shock absorber with a new one.

NOTICE:

When discarding the shock absorber, see DISPOSAL on page SA–209.

SA0C1–01

INSTALLATION

Installation is in the reverse order of removal (See page SA–207).

SA0BY–02

REMOVAL

1. SUPPORT BODY WITH SAFETY STANDS

(a) Jack up and support the body on safety stands.

(b) Lower the axle housing until the leaf spring tension is free, and keep it at this position.

2. REMOVE REAR SHOCK ABSORBER

(a) Remove the 2 rear shock absorber set bolts.

Torque:
2WD: 26 N·m (260 kgf·cm, 19 ft·lbf)
4WD and pre runner: 71 N·m (730 kgf·cm, 53 ft·lbf)

(b) Remove the rear shock absorber.

REAR WHEEL HUB BOLT

SA0BC–03

REPLACEMENT

1. REMOVE REAR WHEEL AND BRAKE DRUM

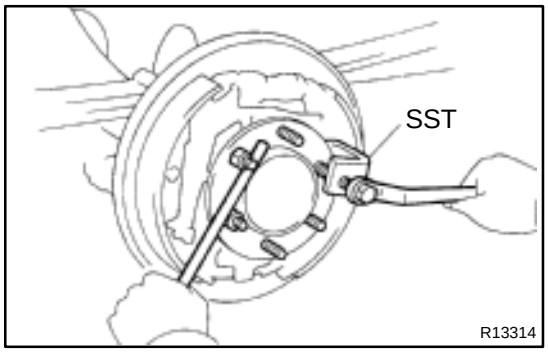

2. REMOVE REAR HUB BOLT

Using SST and a brass bar or an equivalent, remove the hub bolt.

SST 09650–17011

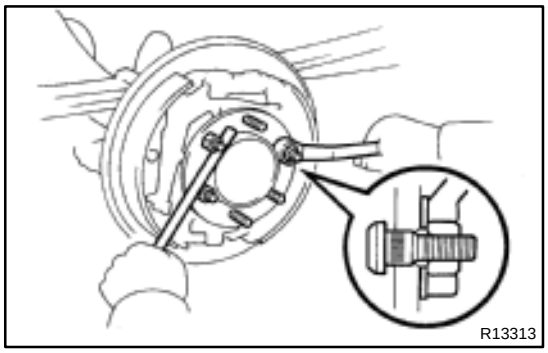

3. INSTALL HUB BOLT

(a) Install a washer and nut to a new hub bolt as shown in the illustration.

(b) Using a brass bar or an equivalent to hold, install the hub bolt by torquing the nut.

4. INSTALL BRAKE DRUM AND REAR WHEEL

Torque: 110 N·m (1,150 kgf·cm, 83 ft·lbf)

FRONT WHEEL HUB BOLT (4WD and PRE RUNNER)

SA1G7–01

REPLACEMENT

HINT:

Pre runner is the model described below.

RZN191L–TRPDKAB, RZN196L–CRPDKAB, VZN195L–CRPDKAB

1. REMOVE FRONT WHEEL

2. REMOVE BRAKE CALIPER AND DISC

(See page SA–24)

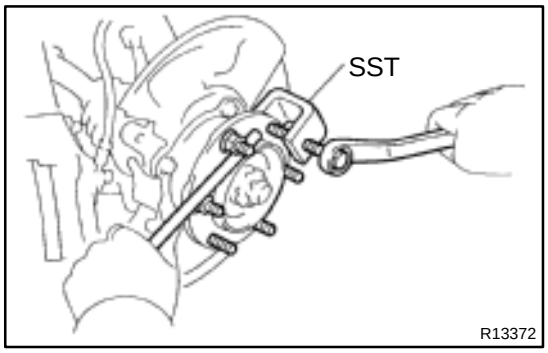

3. REMOVE HUB BOLT

Using SST, remove the hub bolt.

SST 09650–17011

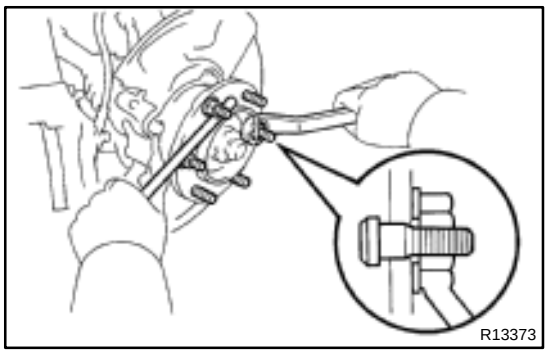

4. INSTALL HUB BOLT

(a) Install a washer and nut to a new hub bolt as shown in the illustration.

(b) Using a hammer handle or an equivalent to hold, install the bolt by torquing the nut.

5. INSTALL BRAKE DISC AND CALIPER

(See page SA–30)

6. INSTALL FRONT WHEEL

Torque: 110 N·m (1,150 kgf·cm, 83 ft·lbf)

7. DEPRESS BRAKE PEDAL SEVERAL TIMES

TRANSFER ASSEMBLY

COMPONENTS

TR010–01

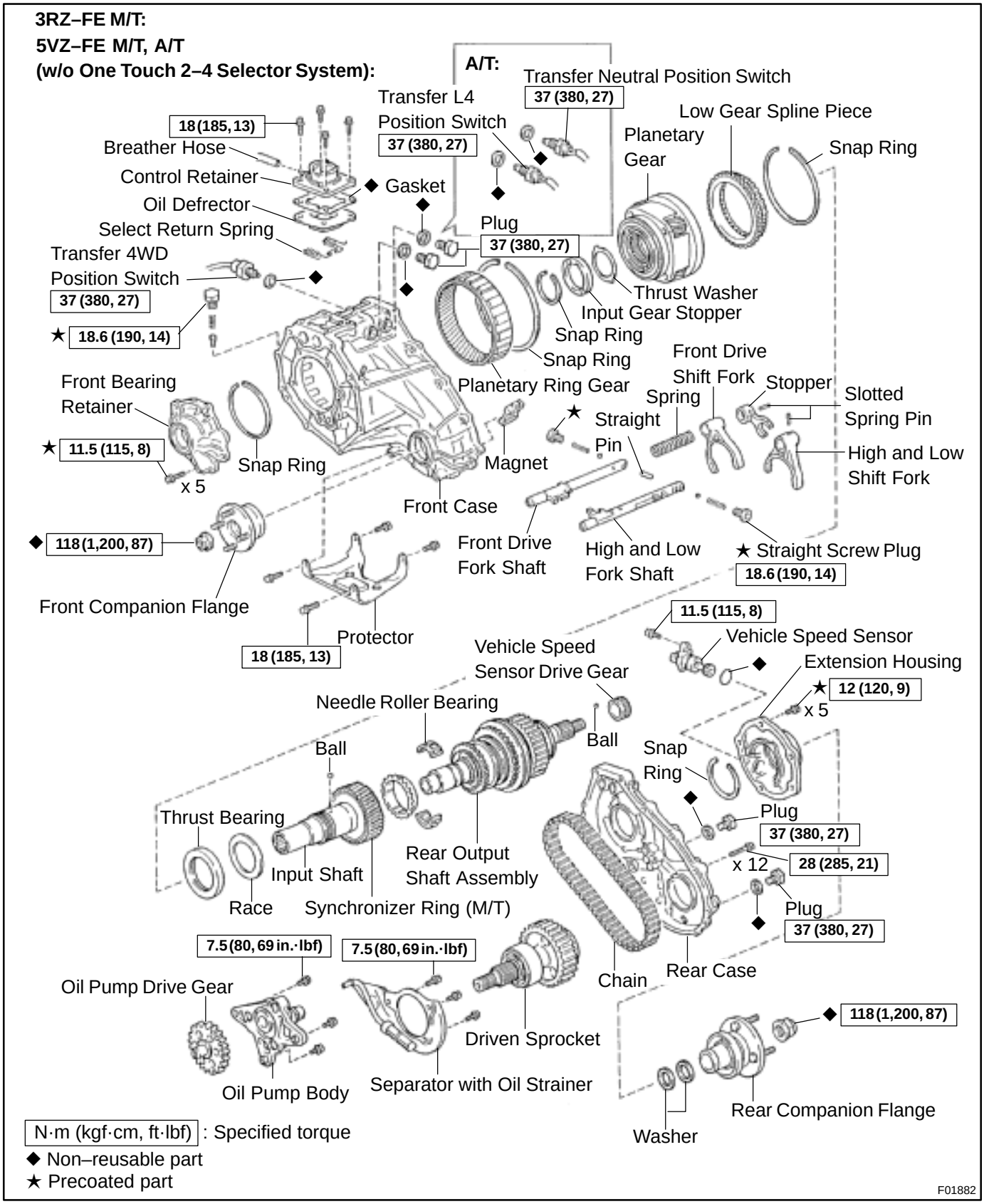

3RZ–FE A/T:

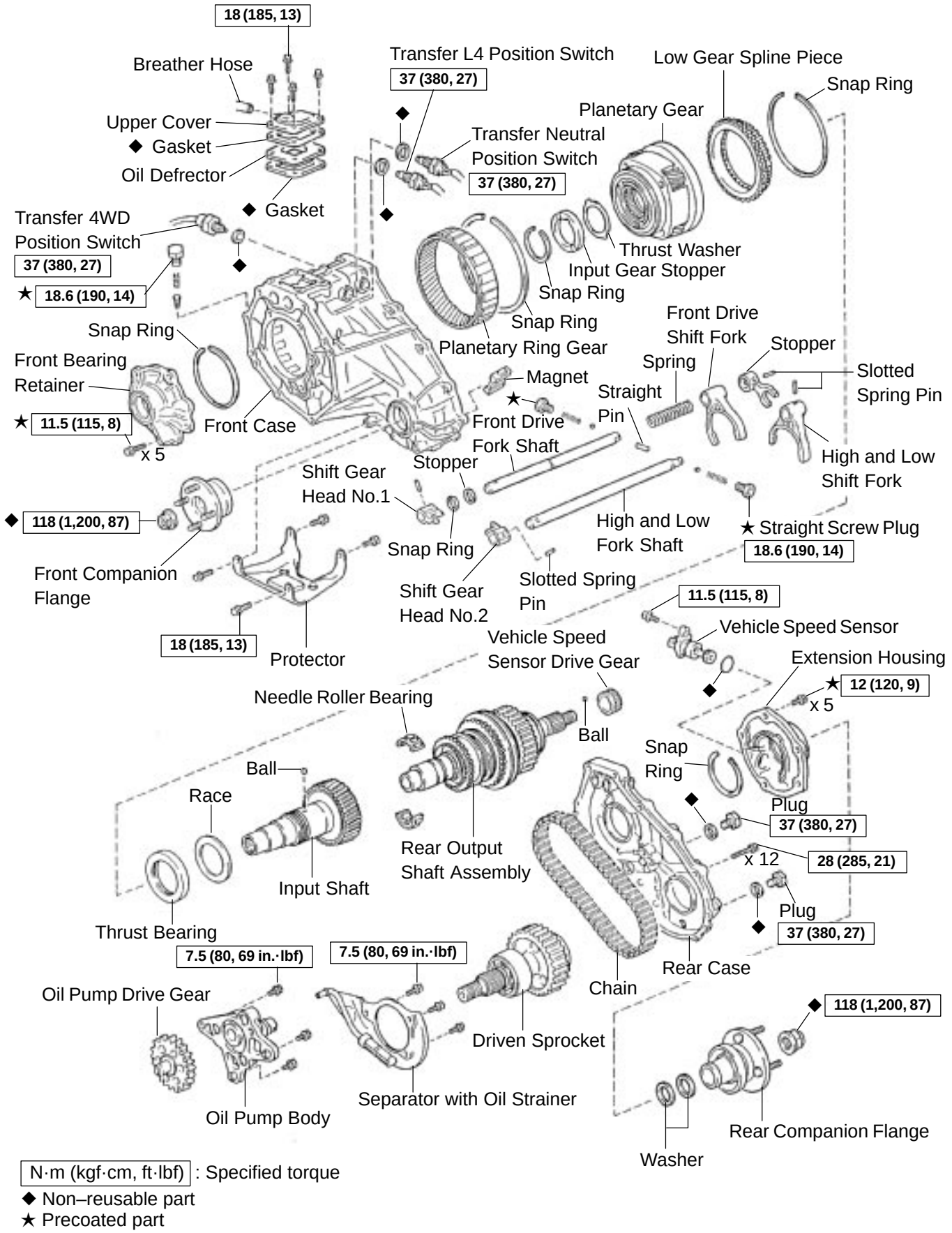

N·m (kgf·cm, ft·lbf) : Specified torque
◆ Non–reusable part
★ Precoated part

F01883

5VZ–FE M/T, A/T
(w/ One Touch 2–4 Selector system):

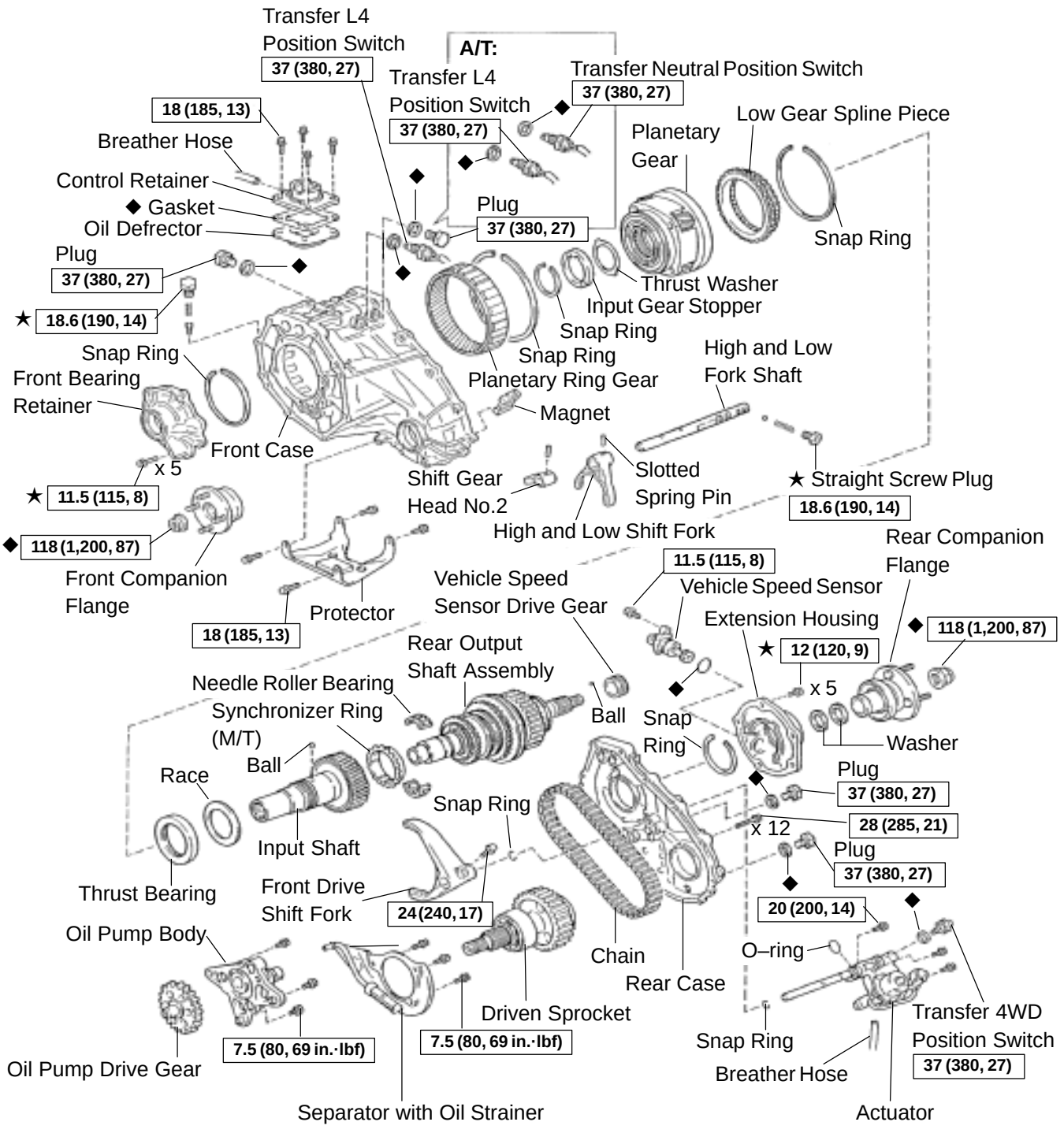

N·m (kgf·cm, ft·lbf) : Specified torque
◆ Non–reusable part
★ Precoated part

F01884

TR011–03

DISASSEMBLY

1. REMOVE VEHICLE SPEED SENSOR
Torque: 11.5 N·m (115 kgf·cm, 8 ft·lbf)

2. w/ One touch 2–4 selector system and A/T:
REMOVE L4 POSITION SWITCH
Torque: 37 N·m (380 kgf·cm, 27 ft·lbf)

3. w/o One touch 2–4 selector system:
REMOVE 4WD POSITION SWITCH
Torque: 37 N·m (380 kgf·cm, 27 ft·lbf)

4. A/T:
REMOVE NEUTRAL POSITION SWITCH
Torque: 37 N·m (380 kgf·cm, 27 ft·lbf)

5. REMOVE PLUGS OF FRONT CASE
Torque: 37 N·m (380 kgf·cm, 27 ft·lbf)

HINT:

At the time of installation,check the following items.

- The input shaft and output shafts rotate smoothly.
- Shifting can be made smoothly to all position.

6. REMOVE PROTECTOR

Remove the 4 bolts and protector.

Torque: 18 N·m (185 kgf·cm, 13 ft·lbf)

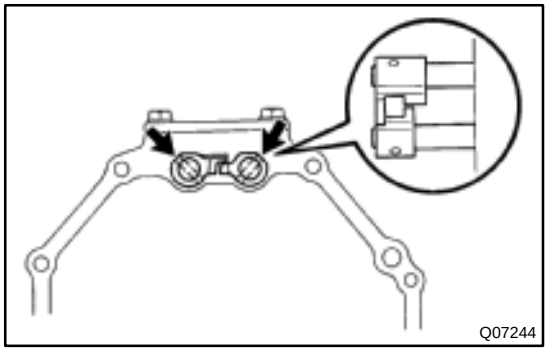
Q07244

7. 3RZ–FE A/T:
REMOVE SHIFT GEAR HEAD NO.1 AND NO.2

(a) Using a pin punch and hammer, drive out the 2 slotted spring pins.

(b) Remove the 2 shift gear heads.

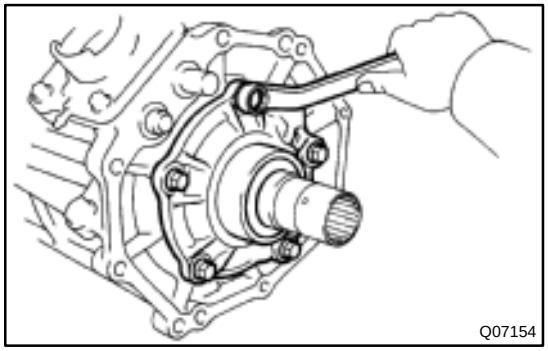
Q07154

8. REMOVE FRONT BEARING RETAINER

(a) Remove the 5 bolts.
Torque: 11.5 N·m (115 kgf·cm, 8 ft·lbf)

HINT:

At the time of installation, apply liquid sealer to the bolts.

Sealant:
Part No.08833–00080, THREE BOND 1344,
LOCTITE 242 or equivalent

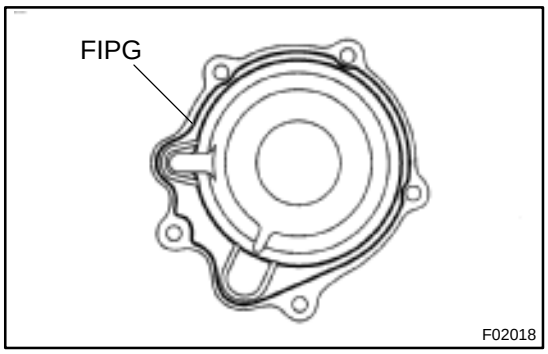

(b) Using a plastic hammer, tap the front bearing retainer and remove it.

HINT:

At the time of installation, please refer to the following items.

- Remove any FIPG material and be careful not to drop oil on the contacting surfaces of the front bearing retainer.
- Apply FIPG to the front bearing retainer, as shown.

FIPG:

Part No. 08826–00090,

THREE BOND 1281 or equivalent

9. 3RZ–FE A/T:

REMOVE UPPER COVER, 2 GASKETS AND OIL DEFLECTOR

Remove the 4 bolts, upper cover, 2 gaskets and oil deflector.

Torque: 18 N·m (185 kgf·cm, 13 ft·lbf)

HINT:

At the time of installation, install a new gasket.

10. Except 3RZ–FE A/T:

REMOVE CONTROL RETAINER, GASKET AND OIL DEFLECTOR

(a) Remove the 4 bolts, control retainer, gasket and oil deflector.

Torque: 18 N·m (185 kgf·cm, 13 ft·lbf)

HINT:

At the time of installation, install a new gasket.

(b) w/o One touch 2–4 selector system:

Remove the select return spring from the control retainer.

11. REMOVE FRONT COMPANION FLANGE

(a) Using a chisel and hammer, loosen the staked part of the nut.

HINT:

At the time of installation, stake a new lock nut.

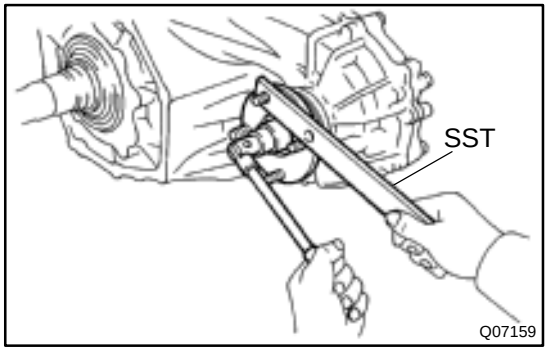

(b) Using SST to hold the flange, remove the companion flange lock nut.

SST 09330–00021

Torque: 118 N·m (1,200 kgf·cm, 87 ft·lbf)

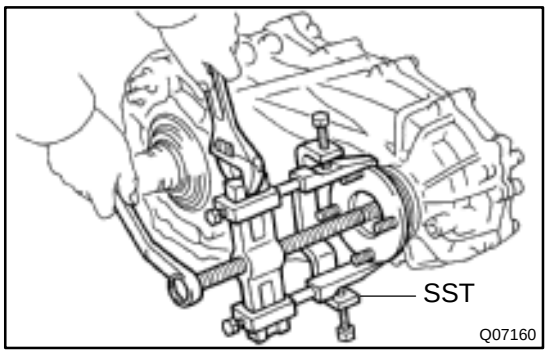

(c) Using SST, remove the companion flange.
SST 09950–40011 (09951–04020, 09952–04010, 09953–04030, 09954–04010, 09955–04051, 09957–04010, 09958–04011)

12. REMOVE REAR COMPANION FLANGE

Remove the rear companion flange in the same way as the front companion flange.

HINT:

At the time of installation, please refer to the following items.

- Front companion flange bolts are slim.
- Rear companion flange bolts are thick.

13. REMOVE EXTENSION HOUSING

(a) Remove the 5 bolts.
Torque: 12 N·m (120 kgf·cm, 9 ft·lbf)

HINT:

At the time of installation, apply liquid sealer to the bolts.
Sealant:
Part No.08833–00080, THREE BOND 1344,
LOCTITE 242 or equivalent

(b) Using a plastic hammer, tap the extension housing and remove it.

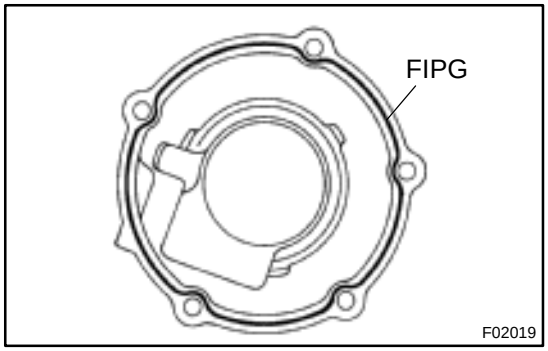

HINT:

At the time of installation, please refer to the following items.

- Remove any FIPG material and be careful not to drop oil on the contacting surfaces of the extension housing.
- Apply FIPG to the extension housing, as shown.
FIPG:
Part No.08826–00090,
THREE BOND 1281 or equivalent

14. REMOVE VEHICLE SPEED SENSOR DRIVE GEAR

(a) Remove the vehicle speed sensor drive gear.

HINT:

At the time of installation, please refer to the following item.
Make sure to install the drive gear in the correct direction.

(b) Using a magnetic finger, remove the ball from the rear output shaft.

15. SEPARATE FRONT CASE AND REAR CASE

(a) Remove the 12 bolts.
Torque: 28 N·m (285 kgf·cm, 21 ft·lbf)

(b) Using a screwdriver, separate the front case and rear case.

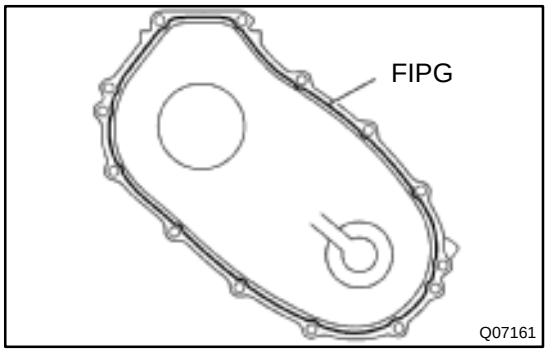

HINT:
At the time of installation, please refer to the following items.

- Shift the high and low sleeve to low side (rear side) and assemble the front case and rear case.
- Remove any FIPG material and be careful not to drop oil on the contacting surfaces of the rear case.
- Apply FIPG to the rear case, as shown.
  FIPG:
  Part No.08826–00090,
  THREE BOND 1281 or equivalent

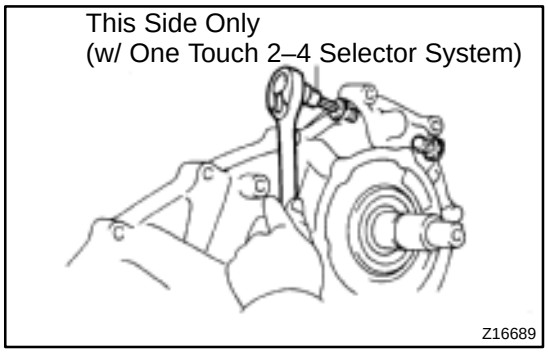

16. REMOVE STRAIGHT SCREW PLUG, SPRING AND LOCKING BALL

(a) Using a hexagon wrench, remove the 1 or 2 screws.
Torque: 18.6 N·m (190 kgf·cm, 14 ft·lbf)

HINT:
At the time of installation, apply liquid sealer to the plugs.
Sealant:
Part No.08833–00080, THREE BOND 1344,
LOCTITE 242 or equivalent

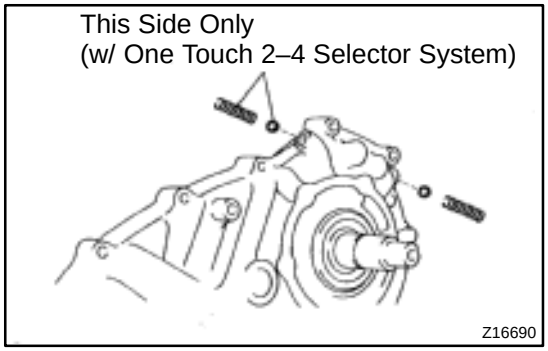

(b) Using a magnetic finger, remove the 1 or 2 springs and balls from the both hole.

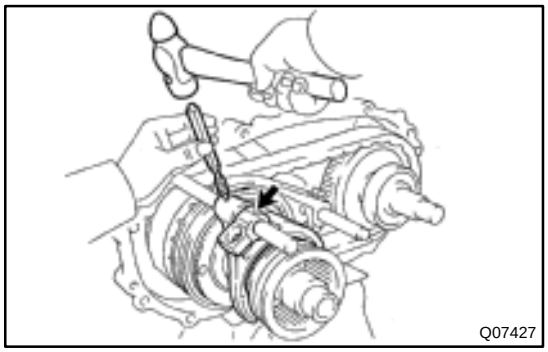

17. w/ One touch 2–4 selector system:
REMOVE HIGH AND LOW FORK SHAFT, SHIFT FORK AND SHIFT HEAD NO.2

(a) Mount the rear case in a vise.

NOTICE:
Be careful not to damage the sealing surface.

(b) Using a pin punch and hammer, drive out the 2 slotted spring pins.

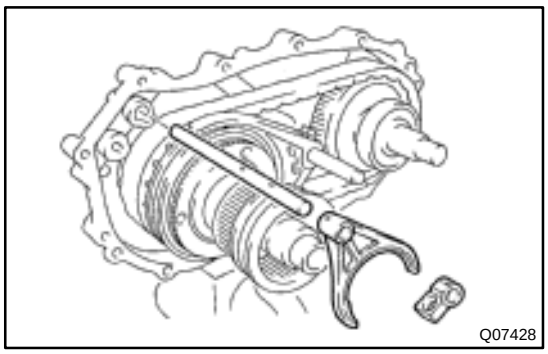
Q07428

(c) Remove high and low fork shaft, shift fork and shift gear head No.2.

HINT:

At the time of installation, please refer to the following items.

- Place the high and low shift fork into the groove of the clutch sleeve.
- Make sure to install the shift fork and shift gear head No.2 in the correct direction.

3RZ–FE A/T:

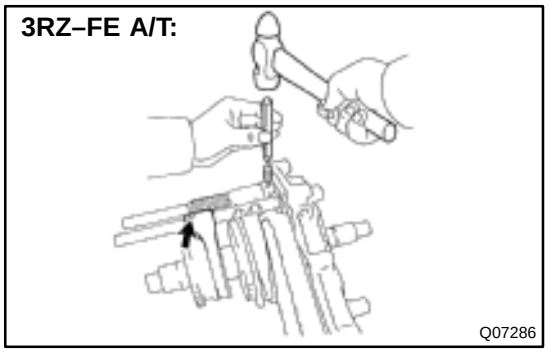
Q07286

18. w/o One touch 2–4 selector system:
REMOVE FRONT DRIVE FORK SHAFT, SHIFT FORK, SPRING AND STOPPER

(a) Mount the rear case in a vise.

NOTICE:

Be careful not to damage the sealing surface.

(b) Using a pin punch and hammer, drive out the 2 slotted spring pins.

HINT:

When the pin is removed from the front drive fork shaft, the shaft will spring loose if the pin punch is removed, so keep the pin punch inserted in the shaft hole.

Except 3RZ–FE A/T:

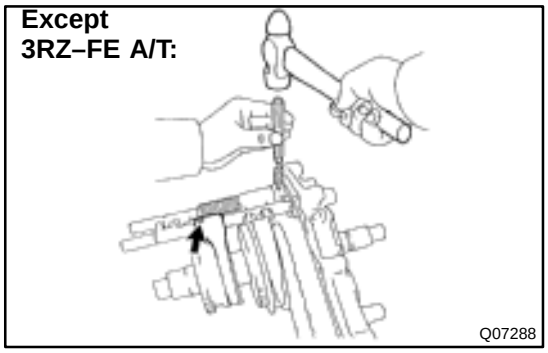
Q07288

3RZ–FE A/T:

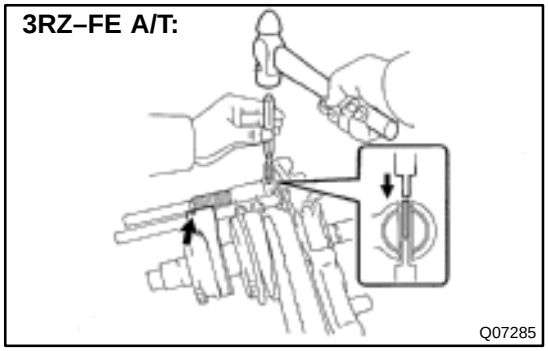
Q07285

HINT:

At the time of installation, please refer to the following items.

- Use a pin punch and hammer, drive in the 2 slotted spring pins.
- When installing the pin in the front drive fork shaft, push the shaft towards the rear case and install the pin while the spring is compressed.

Except 3RZ–FE A/T:

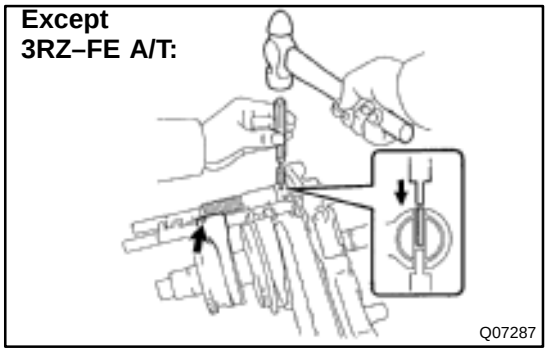
Q07287

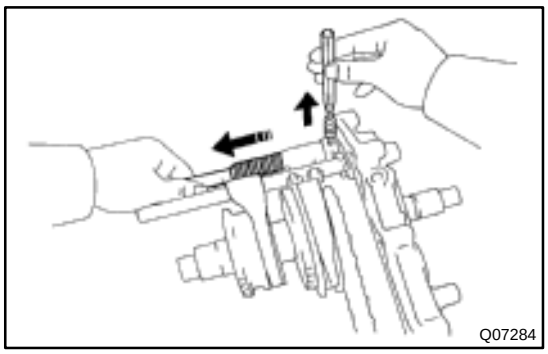

(c) Hold the front drive fork shaft in place by hand, when removing the pin punch.

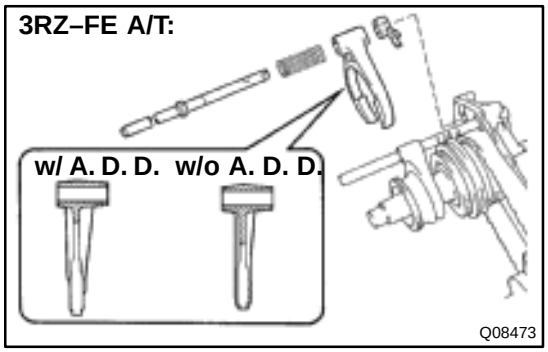

(d) Remove the front drive fork shaft, shift fork, spring and stopper.

HINT:

At the time of installation, please refer to the following items.

- Place the front drive shift fork into the groove of the clutch sleeve.
- Make sure to install the shift fork and stopper in the correct direction.

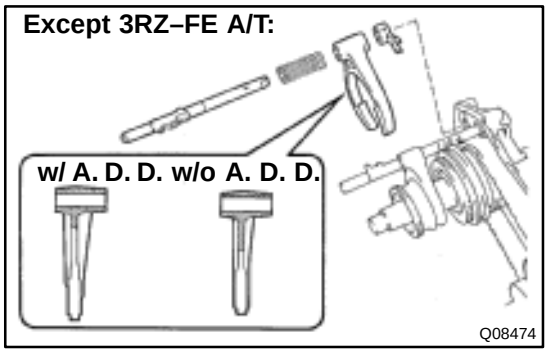

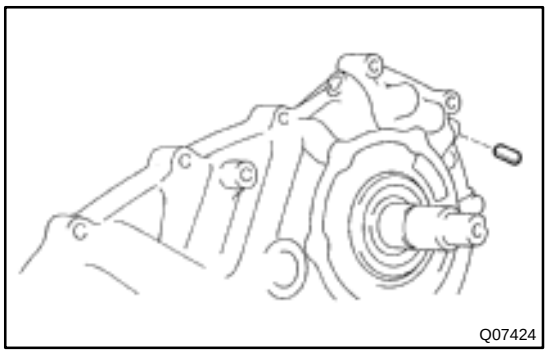

(e) w/o One touch 2–4 selector system:
Using a magnetic finger, remove the straight pin.

HINT:

At the time of installation, please refer to the following item.

Apply gear oil to the straight pin and insert it into the case hole.

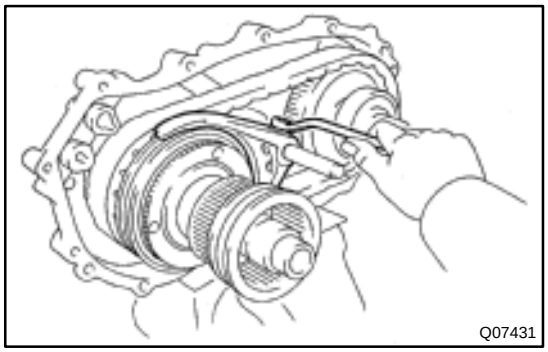

19. w/ One touch 2–4 selector system:
REMOVE REAR OUTPUT SHAFT, DRIVEN SPROCKET, CHAIN AND FRONT DRIVE SHIFT FORK

(a) Remove the shift fork bolt.
Torque: 24 N·m (240 kgf·cm, 17 ft·lbf)

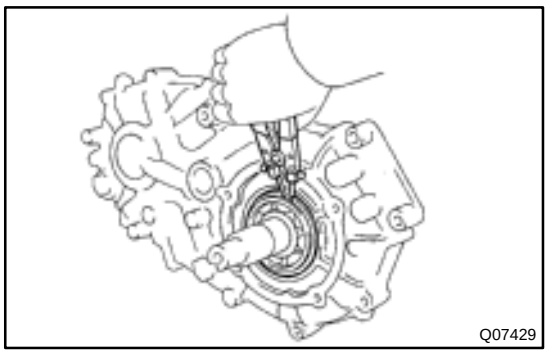

(b) Using a snap ring expander, remove the snap ring.

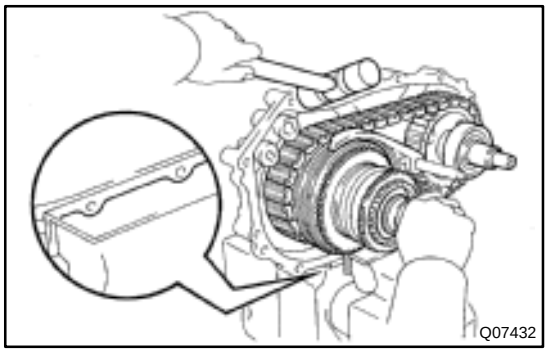

(c) Using a plastic hammer, tap the rear case with pulling the rear output shaft, driven sprocket and front drive shift fork.

HINT:

At the time of installation, please refer to the following items.

- Place the front drive shift fork into the groove of the clutch sleeve.
- Make sure to install the shift fork in the correct direction.
- If necessary, heat the rear case to about 50 – 80˚C (122 – 176˚F).

(d) Remove the chain.

20. w/o One touch 2–4 selector system:
REMOVE HIGH AND LOW FORK SHAFT AND SHIFT FORK

3RZ–FE A/T:

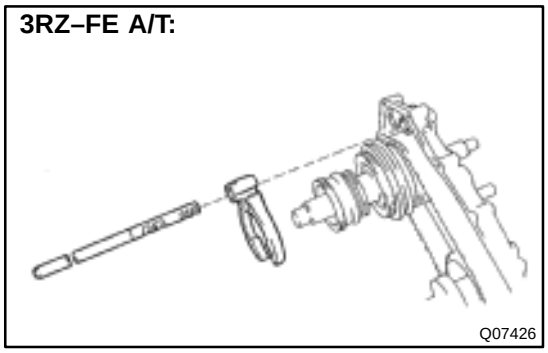

HINT:

At the time of installation, please refer to the following items.

- Place the high and low shift fork into the groove of the clutch sleeve.
- Make sure to install the shift fork in the correct direction.

Except 3RZ–FE A/T:

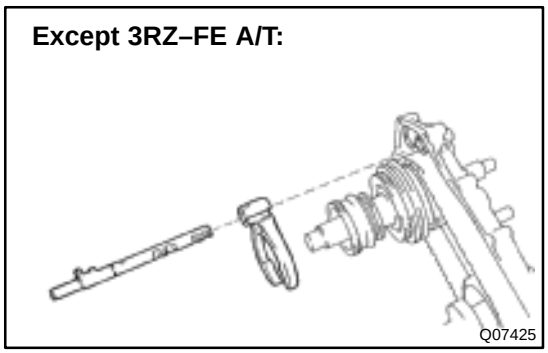

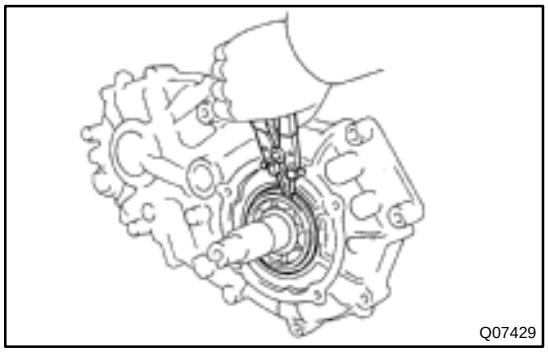

21. REMOVE REAR OUTPUT SHAFT, DRIVEN SPROCKET AND CHAIN

(a) Using a snap ring expander, remove the snap ring.

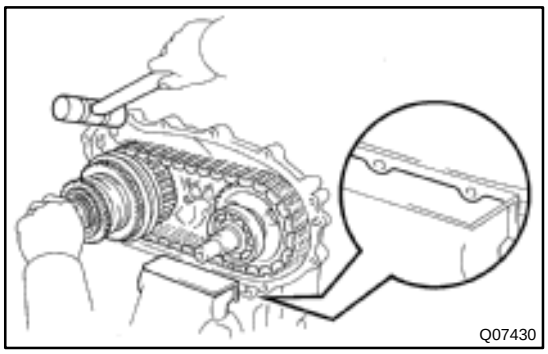

(b) Using a plastic hammer, tap the rear case with pulling the rear output shaft and driven sprocket.

HINT:

At the time of installation, please refer to the following item.

If necessary, heat the rear case to about 50 – 80˚C (122 – 176˚F).

(c) Remove the chain.

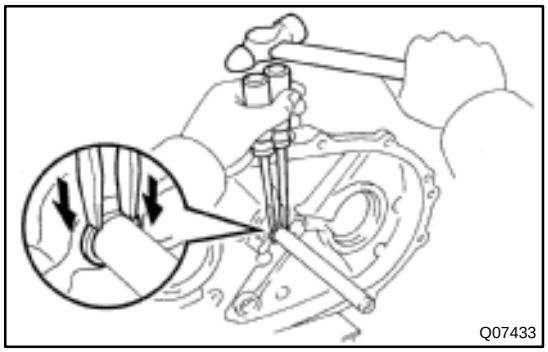

22. w/ One touch 2–4 selector system:
REMOVE ACTUATOR ASSEMBLY

(a) Using 2 screwdrivers and a hammer, remove the snap ring.

(b) Remove the 3 bolts and the actuator assembly.
Torque: 20 N·m (200 kgf·cm, 14 ft·lbf)

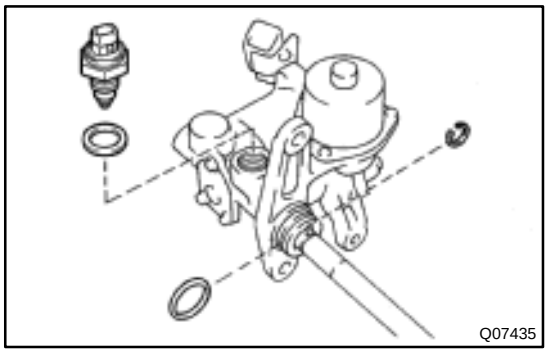

(c) Remove the O–ring, 4WD position switch and snap ring from the actuator assembly.
Torque: 37 N·m (380 kgf·cm, 27 ft·lbf)

HINT:

At the time of installation, please refer to the following item.

Coat a new O–ring with gear oil and install it to the actuator assembly.

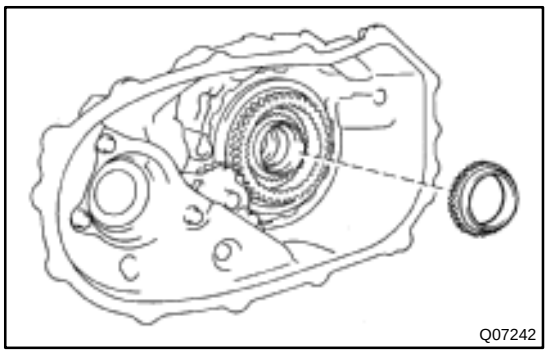

23. M/T:
REMOVE SYNCHRONIZER RING FROM INPUT SHAFT

HINT:

At the time of installation, please refer to the following items.

- Apply MP grease to the synchronizer ring.
- Align the synchronizer ring slots with the shifting keys, and install it on the high and low clutch hub.

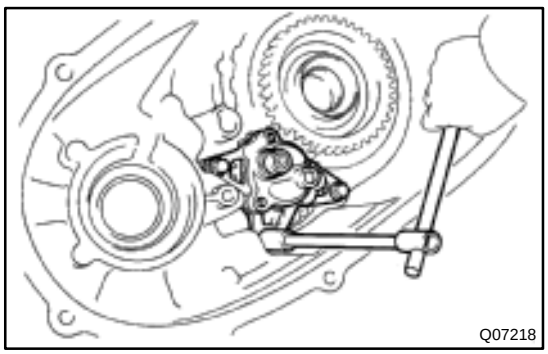

24. REMOVE SEPARATOR WITH OIL STRAINER AND MAGNET

Remove the 3 bolts and the separator with the oil strainer and magnet.

Torque: 7.5 N·m (80 kgf·cm, 69 in.lbf)

25. REMOVE OIL PUMP BODY ASSEMBLY

Remove the 3 bolts and the oil pump body assembly.

Torque: 7.5 N·m (80 kgf·cm, 69 in.lbf)

26. REMOVE OIL PUMP DRIVE GEAR

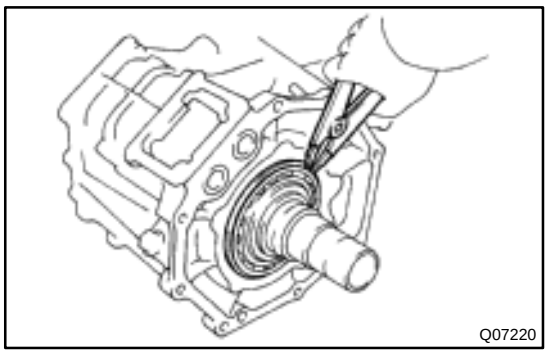
Q07220

27. REMOVE PLANETARY GEAR ASSEMBLY WITH INPUT SHAFT

(a) Using a snap ring expander, remove the snap ring.

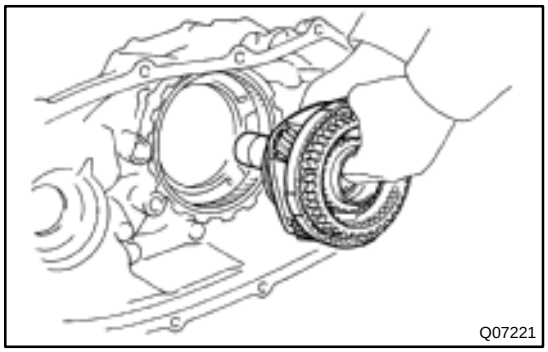
Q07221

(b) Pull out the planetary gear assembly with the input shaft.

HINT:

At the time of installation, please refer to the following item.

If necessary, heat the front case to about 50 – 80˚C (122 – 176˚F).

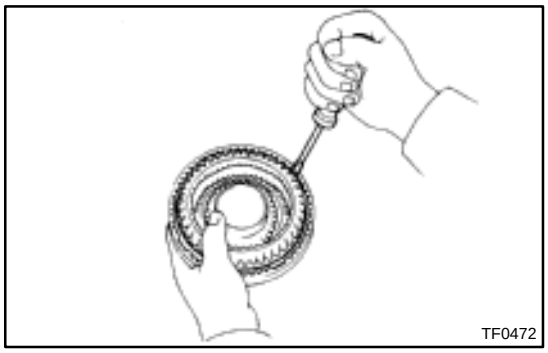
TF0472

28. REMOVE LOW GEAR SPLINE PIECE

(a) Using a screwdriver, remove the snap ring.

HINT:

At the time of installation, please refer to the following item.

Be sure the end gap of the snap ring is not aligned with cutout portion of the planetary carrier.

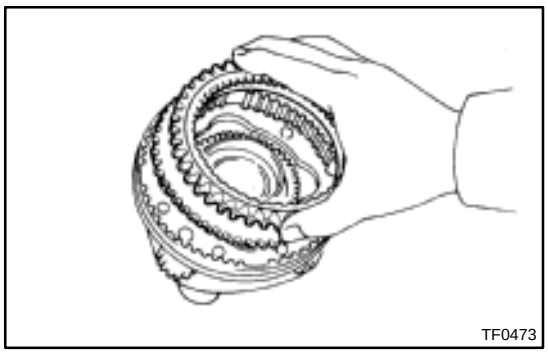
TF0473

(b) Remove the low gear spline piece.

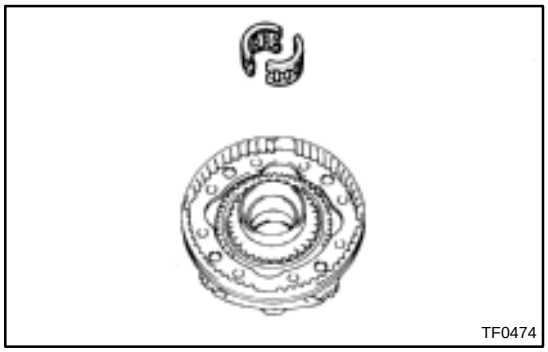
TF0474

29. REMOVE NEEDLE ROLLER BEARING FROM INPUT SHAFT

HINT:

At the time of installation, apply gear oil to the needle roller bearing.

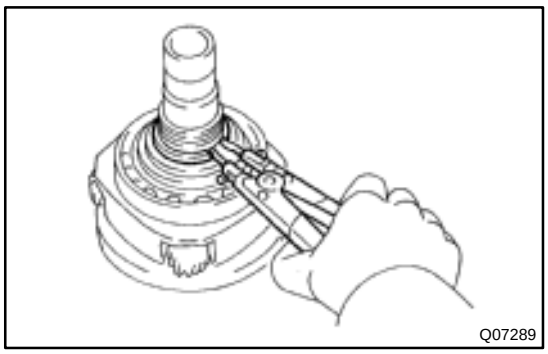
Q07289

30. REMOVE INPUT SHAFT STOPPER AND THRUST BEARING

(a) Using a snap ring expander, remove the snap ring.

HINT:

At the time of installation, please refer to the following item.

Select a snap ring that will allow 0.05 – 0.15 mm (0.0020 – 0.0059 in.) axial play.

Mark	Thickness mm (in.)
A	2.10 – 2.15 (0.0827 – 0.0846)
B	2.15 – 2.20 (0.0846 – 0.0866)
C	2.20 – 2.25 (0.0866 – 0.0886)
D	2.25 – 2.30 (0.0886 – 0.0906)
E	2.30 – 2.35 (0.0906 – 0.0925)
F	2.35 – 2.40 (0.0925 – 0.0945)
G	2.40 – 2.45 (0.0945 – 0.0965)
H	2.45 – 2.50 (0.0965 – 0.0984)
J	2.50 – 2.55 (0.0984 – 0.1004)
K	2.55 – 2.60 (0.1004 – 0.1024)
L	2.60 – 2.65 (0.1024 – 0.1043)
M	2.65 – 2.70 (0.1043 – 0.1063)
N	2.70 – 2.75 (0.1063 – 0.1083)
P	2.75 – 2.80 (0.1083 – 0.1102)
Q	2.80 – 2.85 (0.1102 – 0.1122)
R	2.85 – 2.90 (0.1122 – 0.1142)
S	2.90 – 2.95 (0.1142 – 0.1161)
T	2.95 – 3.00 (0.1161 – 0.1181)
U	3.00 – 3.05 (0.1181 – 0.1201)

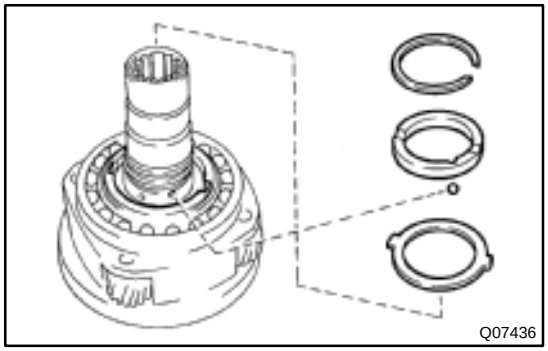
Q07436

(b) Remove the input gear stopper, thrust washer and ball.

HINT:

At the time of installation, apply gear oil to the input gear stopper and thrust washer.

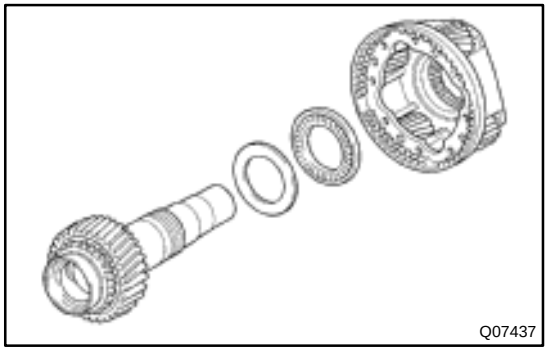
Q07437

31. REMOVE INPUT SHAFT, THRUST NEEDLE ROLLER BEARING AND THRUST RACE

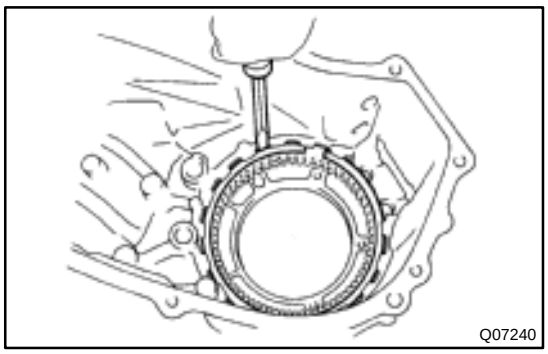

32. REMOVE PLANETARY RING GEAR

(a) Using a screwdriver, remove the snap ring.

HINT:

At the time of installation, please refer to the following item.

Be sure the end gap of the snap ring is not aligned with the upper side of the case.

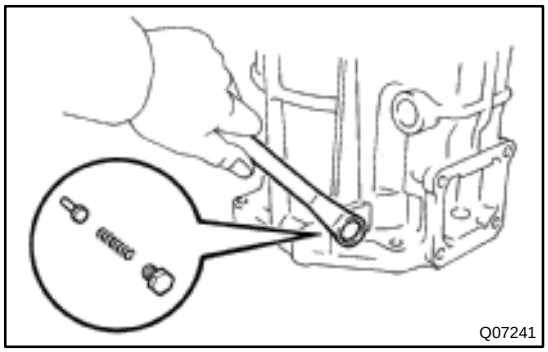

(b) Remove the plug, spring and pin.

Torque: 18.6 N·m (190 kgf·cm, 14 ft·lbf)

HINT:

At the time of installation, apply liquid sealer to the plug.

Sealant:
Part No.08833–00080, THREE BOND 1344,
LOCTITE 242 or equivalent

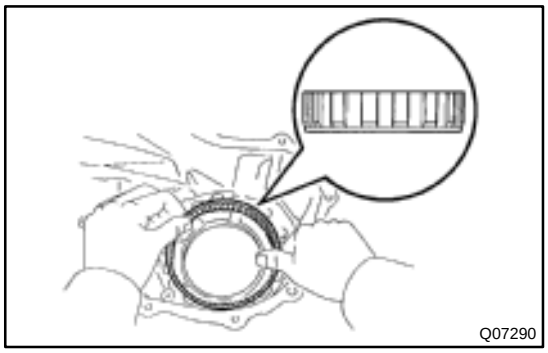

(c) Remove the planetary ring gear.

HINT:

At the time of installation, please refer to the following item.

Make sure to install the ring gear in the correct direction.

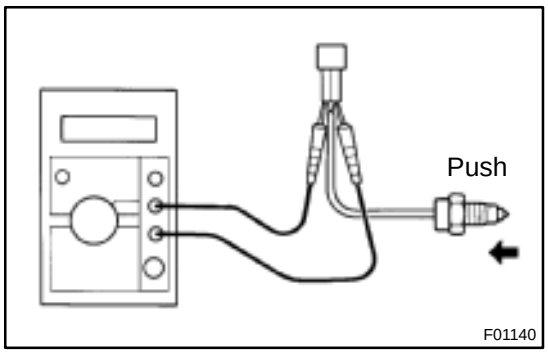

33. INSPECT SWITCHES

Check that there is continuity between terminals as shown.

Switch Position	Specified Condition
Push	Continuity
Free	No continuity

If operation is not as specified, replace the switch.

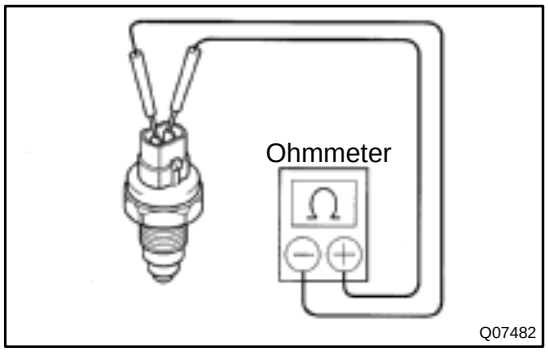

TR012–01

REASSEMBLY

Reassembly is in the reverse order of disassembly (See page TR–13).

HINT:

Coat all of the sliding and rotating surfaces with gear oil before assembly.

DRIVEN SPROCKET

COMPONENTS

TR015–01

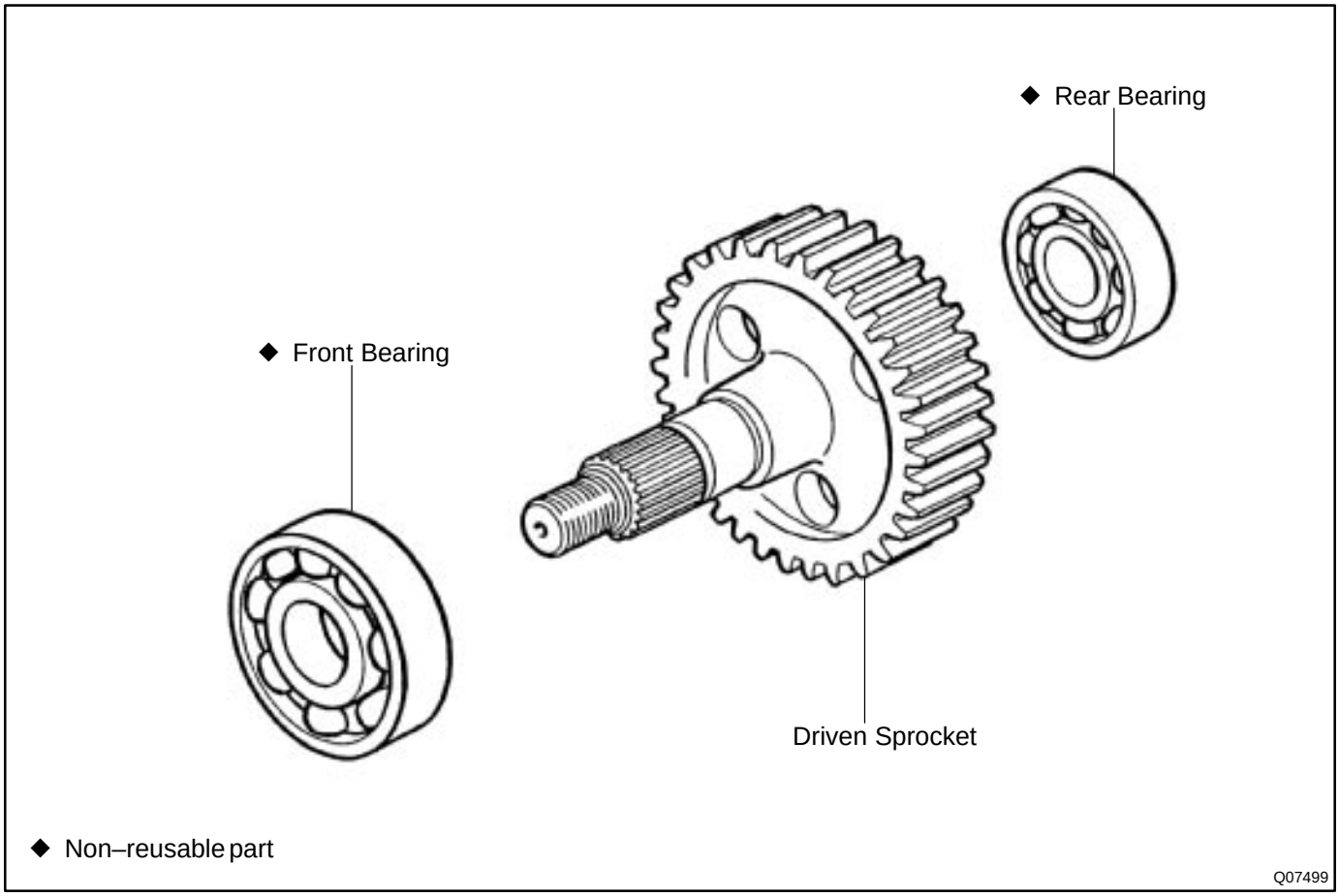

TR016–01

REPLACEMENT

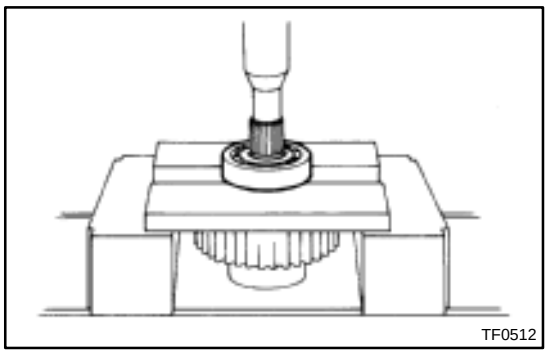

1. REMOVE FRONT BEARING

Using a press, remove the front bearing.

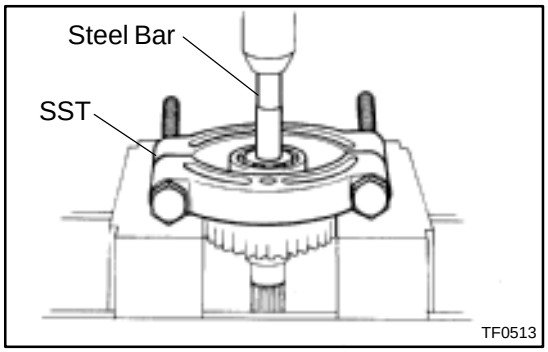

2. REMOVE REAR BEARING

Using SST and a press, remove the rear bearing.

SST 09555–55010

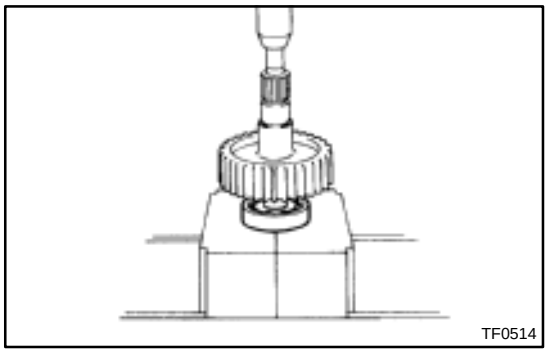

3. INSTALL REAR BEARING

Using a press, install a new rear bearing.

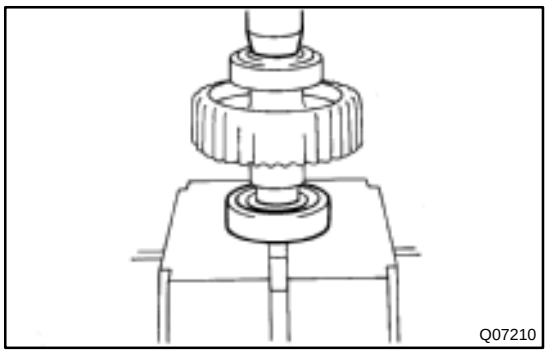

4. INSTALL FRONT BEARING

Using a press, install a new front bearing.

INPUT SHAFT

COMPONENTS

TR01B–01

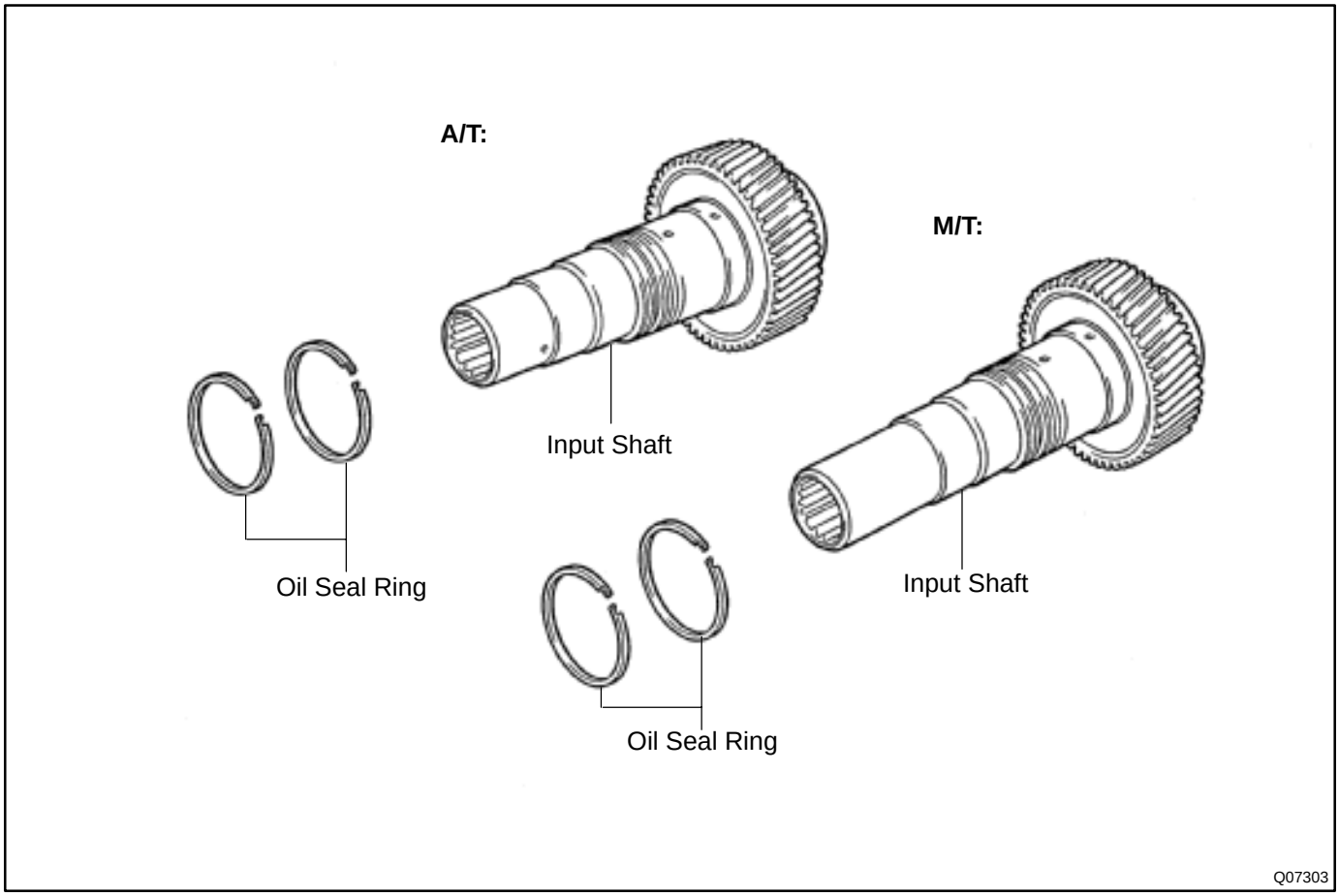

TR01C–01

INSPECTION

1. REMOVE OIL SEAL RINGS

Remove the 2 oil seal rings.

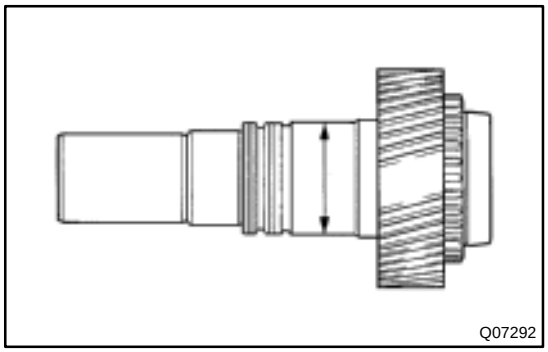

2. INSPECT INPUT SHAFT

(a) Using a micrometer, measure the outer diameter of the input shaft journal surface.

Minimum diameter: 47.59 mm (1.8736 in.)

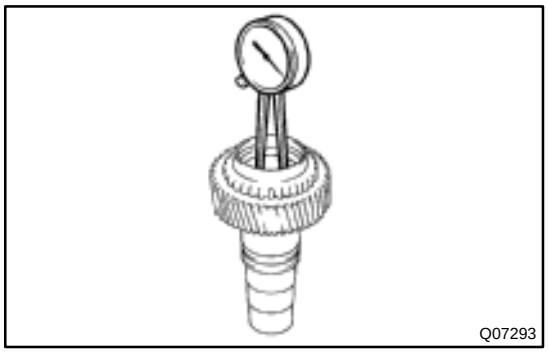

(b) Using a dial indicator, measure the inside diameter of the input shaft bushing.

Maximum inside diameter: 39.14 mm (1.5409 in.)

If the inside diameter exceeds the maximum, replace the input shaft.

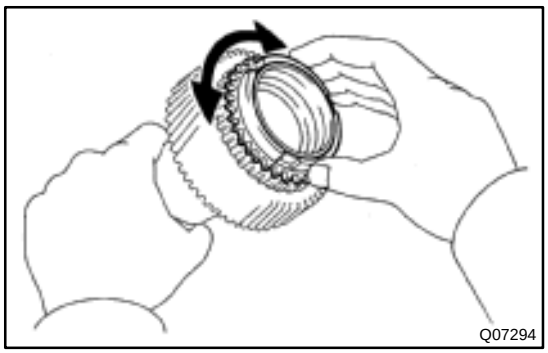

3. M/T:
INSPECT SYNCHRONIZER RING

(a) Turn the ring and push it in to check the braking action.

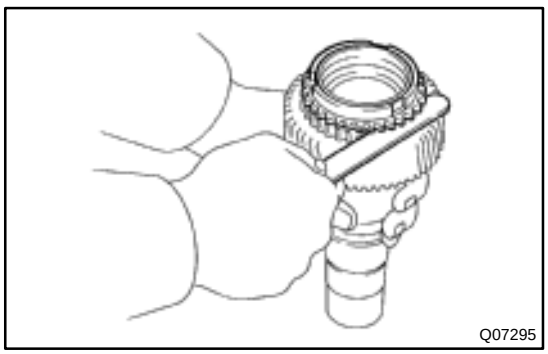

(b) Measure the clearance between the synchronizer ring back and the input shaft spline end.

Standard clearance:
1.05 – 1.85 mm (0.0413 – 0.0728 in.)
Minimum clearance: 0.80 mm (0.0315 in.)

If the clearance is less than the minimum, replace the synchronizer ring.

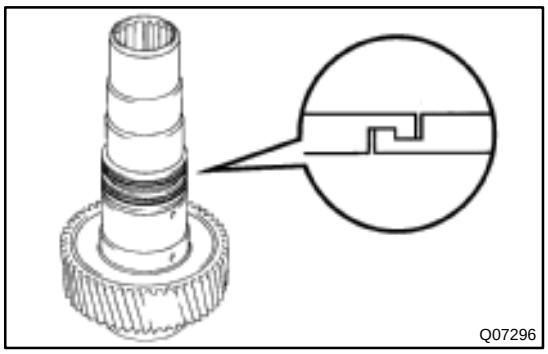

4. INSTALL OIL SEAL RINGS

Install the 2 oil seal rings.

HINT:

- Apply gear oil to the oil seal ring.
- Hang securely to eliminate clearance.

OIL PUMP BODY

COMPONENTS

TR013–01

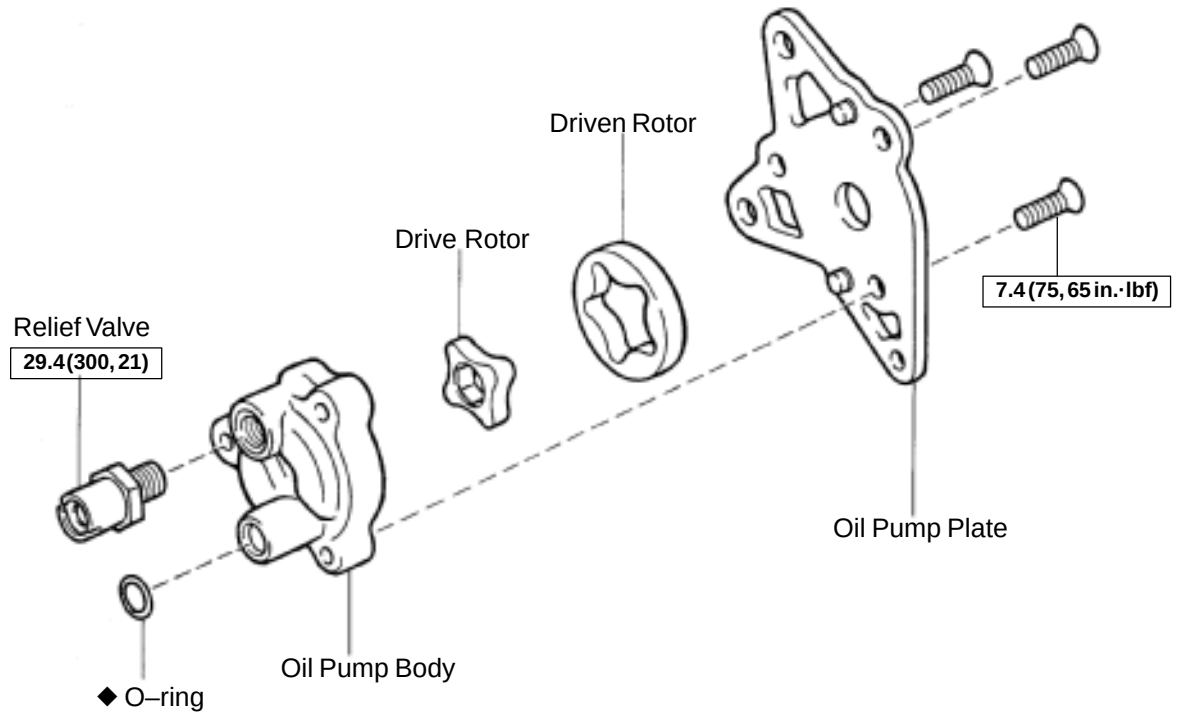

N·m (kgf·cm, ft·lbf) : Specified torque
◆ Non–reusable part

Q07245

TR014–01

INSPECTION

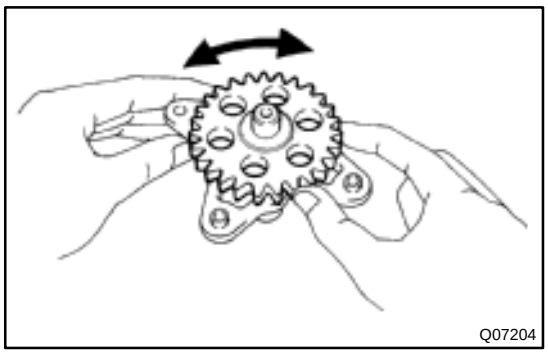
Q07204

1. CHECK OIL PUMP OPERATION

Install the oil pump drive gear to the drive rotor, check that the drive rotor turns smoothly.

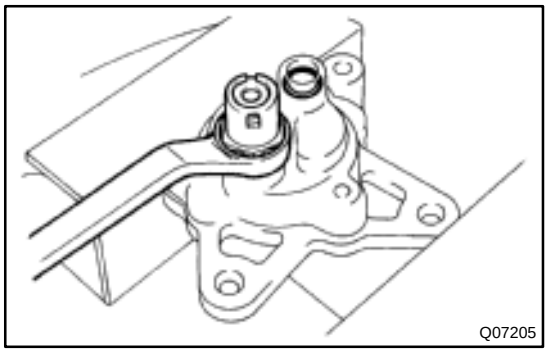
Q07205

2. INSPECT ROTORS CLEARANCE

(a) Remove the relief valve and O–ring.
  (1) Mount the oil pump plate in a vise.
  (2) Remove the relief valve and O–ring from the oil pump body.
  Torque: 29.4 N·m (300 kgf·cm, 21 ft·lbf)

HINT:
At the time of installation, coat a new O–ring with gear oil and install it to the oil pump body.

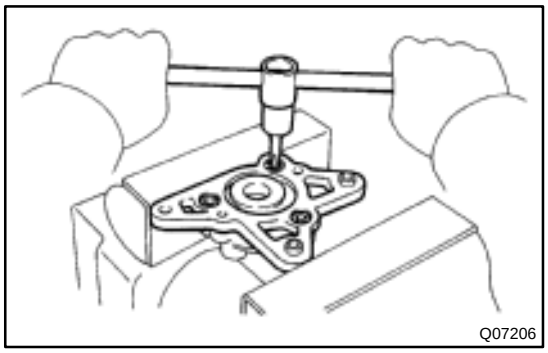
Q07206

(b) Remove the oil pump plate.
  (1) Using a torx socket wrench, unscrew the 3 torx screws. (Torx socket wrench T30 09042–00010)
  Torque: 7.4 N·m (75 kgf·cm, 65 in.·lbf)
  (2) Remove the oil pump plate.

(c) Remove the drive rotor and driven rotor.

HINT:
At the time of installation, apply gear oil to the both rotors.

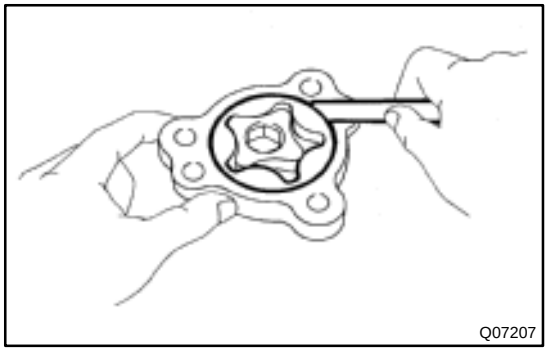
Q07207

(d) Inspect the driven rotor body clearance.
  (1) Push the driven rotor to one side of the body.
  (2) Using a feeler gauge, measure the clearance.
  Standard clearance:
  0.09 – 0.16 mm (0.0035 – 0.0063 in.)
  Maximum clearance: 0.16 mm (0.0063 in.)

If the clearance exceeds the maximum, replace the drive rotor, driven rotor or pump body.

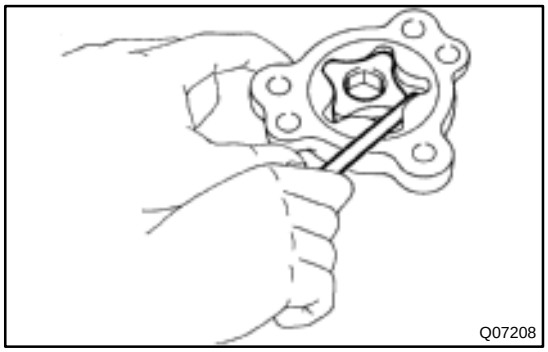
Q07208

(e) Inspect the both rotor tips clearance.
  Using a feeler gauge, measure the clearance between both rotor tips.
  Standard clearance:
  0.05 – 0.15 mm (0.0020 – 0.0059 in.)
  Maximum clearance: 0.15 mm (0.0059 in.)

If the clearance exceeds the maximum, replace the drive rotor, driven rotor or pump body.

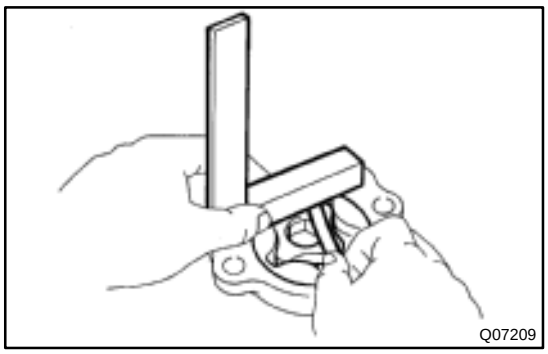

(f) Inspect the both rotors side clearance.
Using a steel straight edge and feeler gauge, measure the clearance between the rotors and straight edge.
Standard clearance:
0.03 – 0.10 mm (0.0012 – 0.0039 in.)
Maximum clearance: 0.10 mm (0.0039 in.)

If the clearance exceeds the maximum, replace the drive rotor, driven rotor or pump body.

3. ASSEMBLE REMOVAL PARTS

HINT:

Assemble is in the reverse order of disassembly.

OIL SEAL

COMPONENTS

TR01F–01

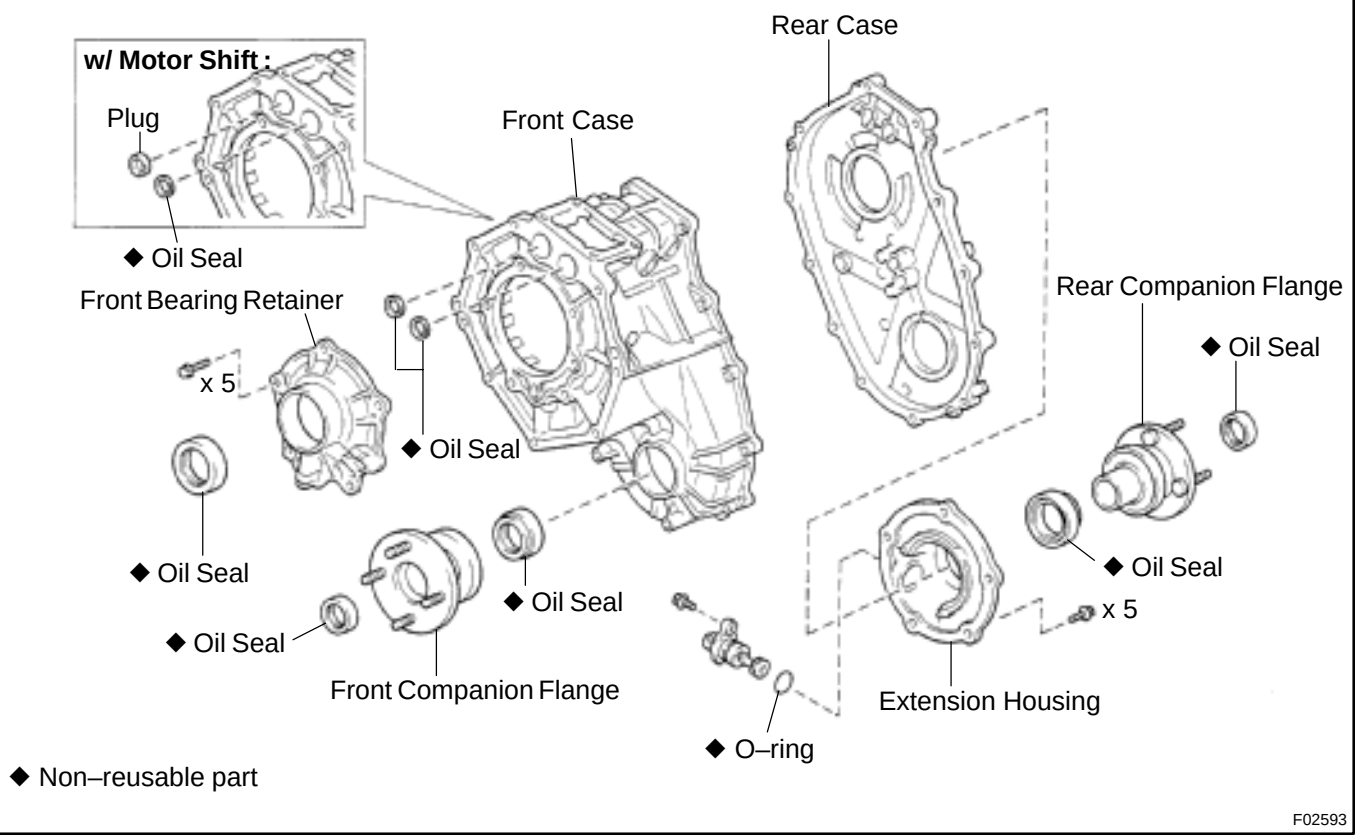

TR01G–01

REPLACEMENT

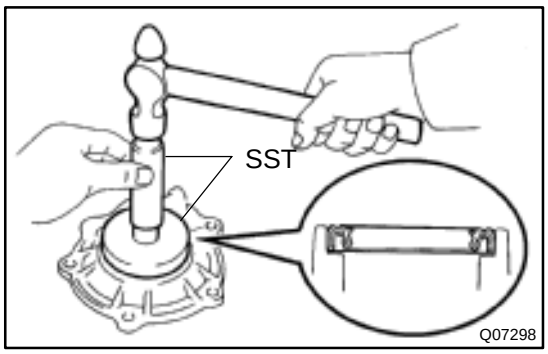

1. IF NECESSARY, REPLACE FRONT BEARING RETAINER OIL SEAL

(a) Using a screwdriver and hammer, drive out the oil seal.

(b) Using SST and a hammer, drive in a new oil seal until its surface is flush with the retainer upper surface.
SST 09950–60010 (09951–00590), 09950–70010 (09951–07100)

(c) Coat the lip of the oil seal with MP grease.

2. IF NECESSARY, REPLACE FRONT CASE OIL SEAL

(a) Using a screwdriver and hammer, drive out the oil seal.

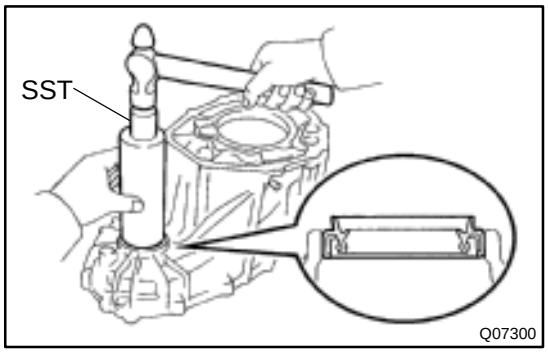

(b) Using SST and a hammer, drive in a new oil seal until its surface is flush with the case upper surface.
SST 09316–60011 (09316–00011)

(c) Coat the lip of the oil seal with MP grease.

3. IF NECESSARY, REPLACE EXTENSION HOUSING OIL SEAL

(a) Using a screwdriver and hammer, drive out the oil seal.

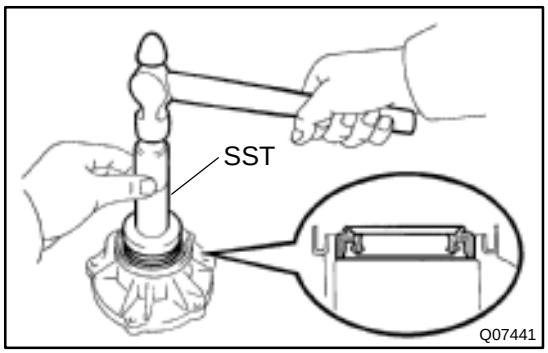

(b) Using SST and a hammer, drive in a new oil seal until its surface is flush with the housing upper surface.
SST 09554–22010

(c) Coat the lip of the oil seal with MP grease.

4. IF NECESSARY, REPLACE FRONT AND REAR COMPANION FLANGE OIL SEALS

(a) Using a screwdriver and hammer, drive out the oil seals from the 2 flanges.

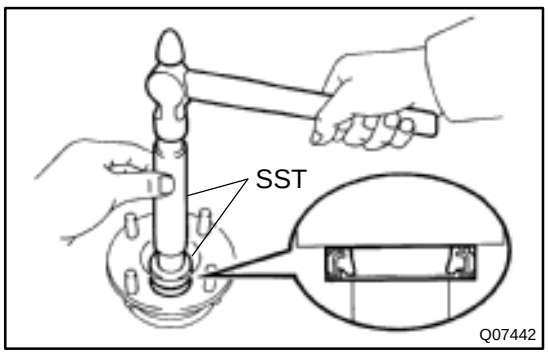

(b) Using SST and a hammer, drive in a new oil seal.
SST 09950–60010 (09951–00220, 09951–00350, 09952–06010), 09950–70010 (09951–07100)

(c) Coat the lip of the oil seal with MP grease.

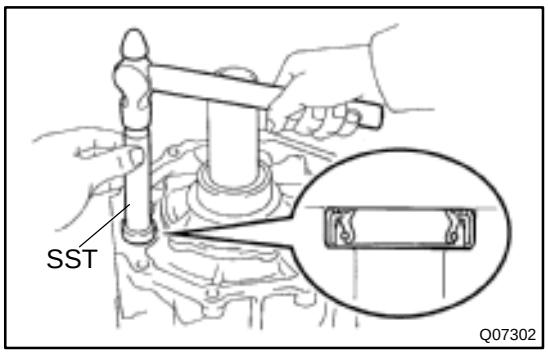

5. IF NECESSARY, REPLACE SHIFT FORK SHAFT OIL SEALS

(a) Using a screwdriver, pry out the oil seal.

(b) Using SST and a hammer, drive in a new oil seal.
SST 09304–12012
Oil seal depth: –0.5 – 0.5 mm (–0.020 – 0.020 in.)

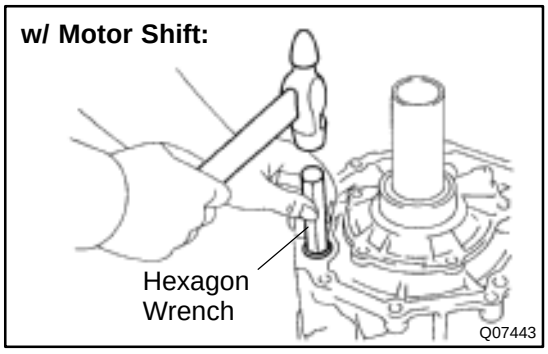

6. w/ One touch 2–4 selector system: Only when replacing the front case
IF NECESSARY, REPLACE PLUG

Using a hexagon wrench (19 mm) and hammer, drive in a new plug.

PLANETARY GEAR

COMPONENTS

TR01D–01

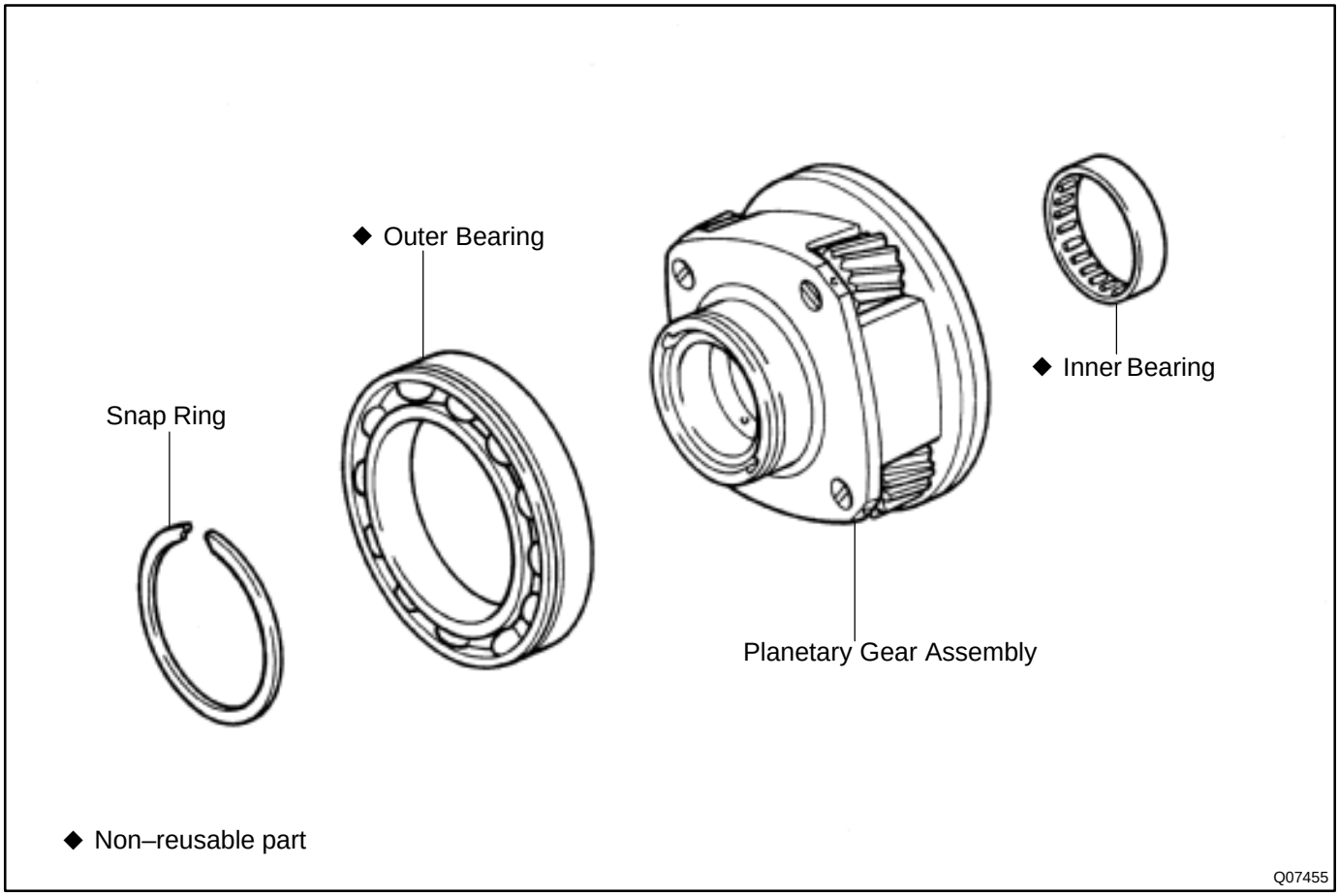

TR01E–01

INSPECTION

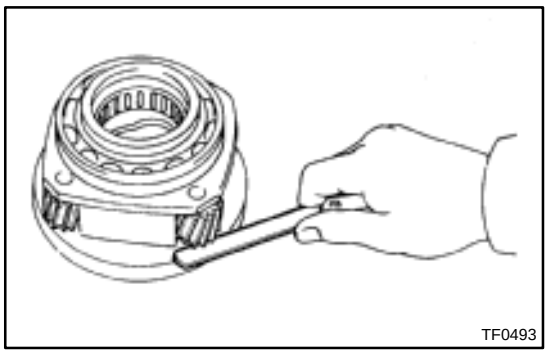
TF0493

1. INSPECT PINION GEAR THRUST CLEARANCE

Using a feeler gauge, measure the planetary pinion gear thrust clearance.

Standard clearance:
0.11 – 0.84 mm (0.0043 – 0.0331 in.)
Maximum clearance: 0.84 mm (0.0331 in.)

If the clearance exceeds the maximum, replace the planetary gear assembly.

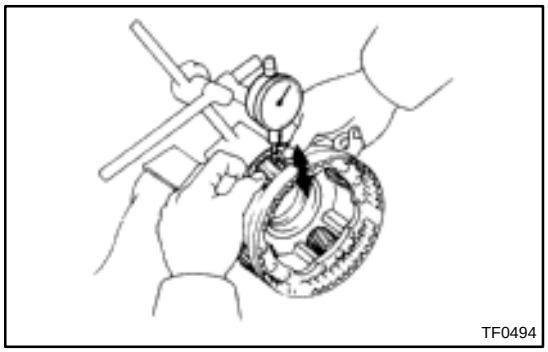
TF0494

2. INSPECT PLANETARY PINION GEAR RADIAL CLEARANCE

Using a dial indicator, measure the radial clearance of the planetary pinion gear.

Standard clearance:
0.009 – 0.038 mm (0.0004 – 0.0015 in.)
Maximum clearance: 0.038 mm (0.0015 in.)

If the clearance exceeds the maximum, replace the planetary gear assembly.

3. IF NECESSARY, REPLACE PLANETARY GEAR OUTER BEARING

(a) Using a snap ring expander, remove the snap ring.

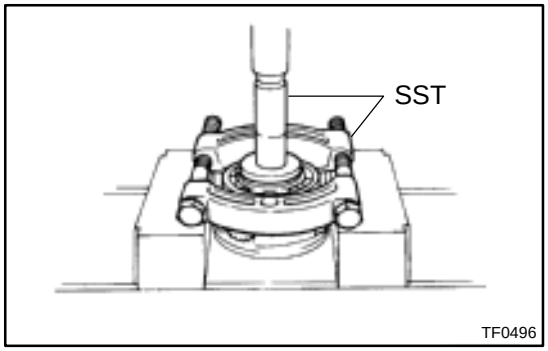

TF0496

(b) Using SST and a press, remove the bearing.
SST 09554–30011, 09555–55010

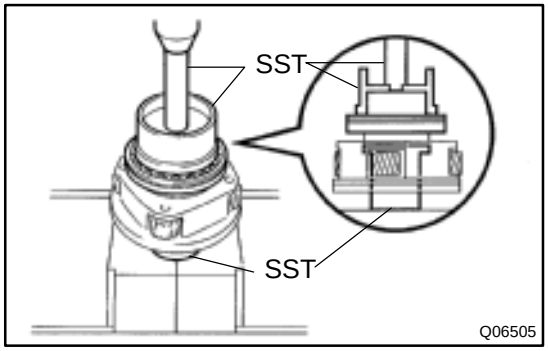

Q06505

(c) Using SST and a press, install a new bearing with the groove faced forward.
SST 09223–15020, 09515–30010, 09950–70010 (09951–07100)

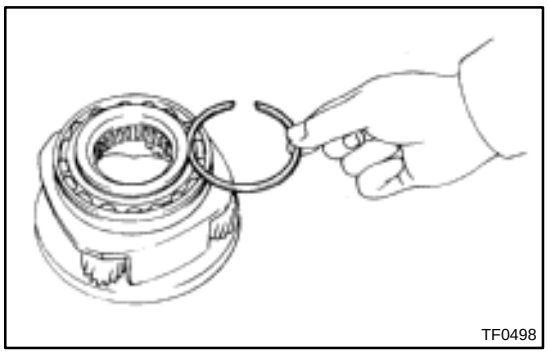

(d) Select a snap ring that will allow minimum axial play.

Mark	Thickness mm (in.)
1	1.45 – 1.50 (0.0571 – 0.0591)
2	1.50 – 1.55 (0.0591 – 0.0610)
3	1.55 – 1.60 (0.0610 – 0.0630)
4	1.60 – 1.65 (0.0630 – 0.0650)
5	1.65 – 1.70 (0.0650 – 0.0669)

(e) Using a snap ring expander, install the snap ring.

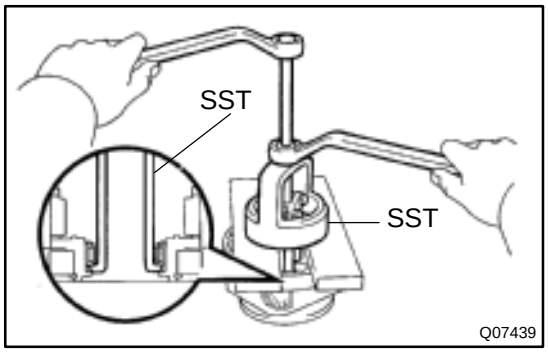

4. IF NECESSARY, REPLACE PLANETARY GEAR THRUST INNER BEARING

(a) Using SST and a press, remove the bearing.
SST 09612–65014 (09612–01030, 09612–01050)

NOTICE:
Hang SST securely to the clearance between the thrust inner bearing and planetary gear.

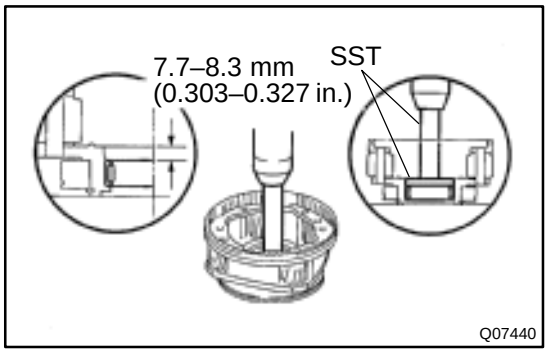

(b) Using SST and a press, install a new bearing.
SST 09950–60010 (09951–00570),
09950–70010 (09951–07100)
Bearing depth: 7.7 – 8.3 mm (0.303 – 0.327 in.)

REAR OUTPUT SHAFT

COMPONENTS

TR017–01

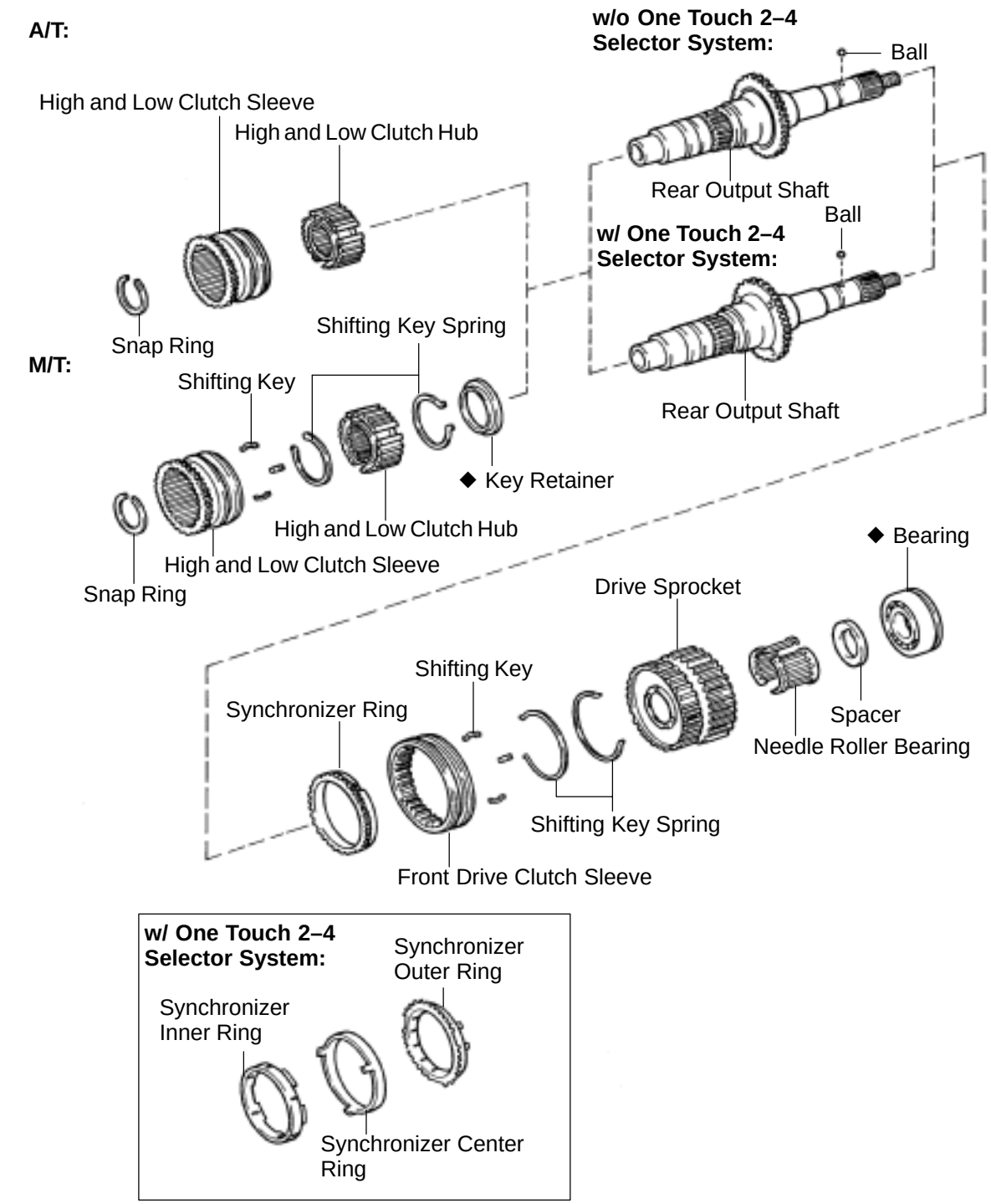

◆ Non–reusable part

F02044

w/o A. D. D.:

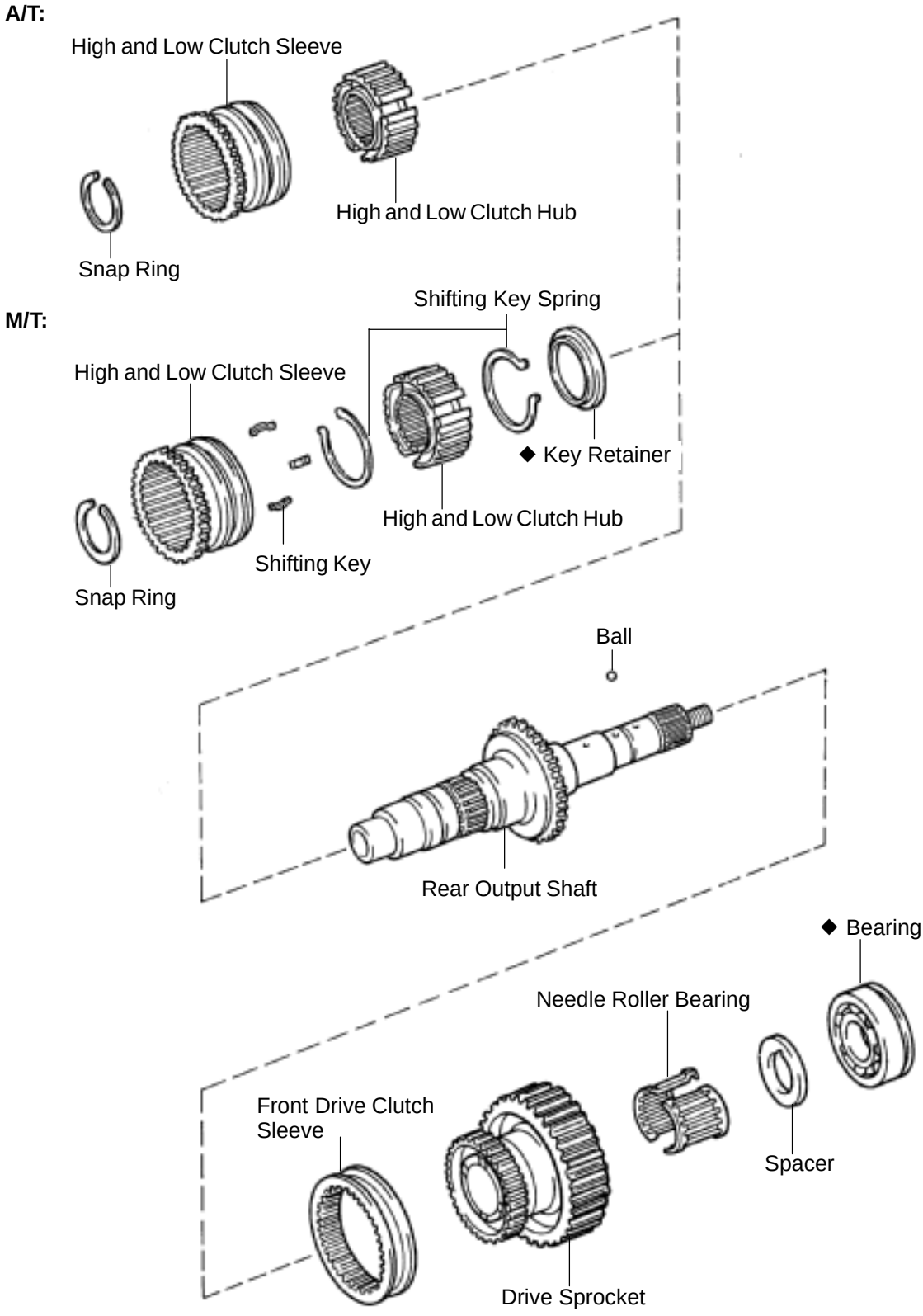

◆ Non–reusable part

F02045

TR018–01

DISASSEMBLY

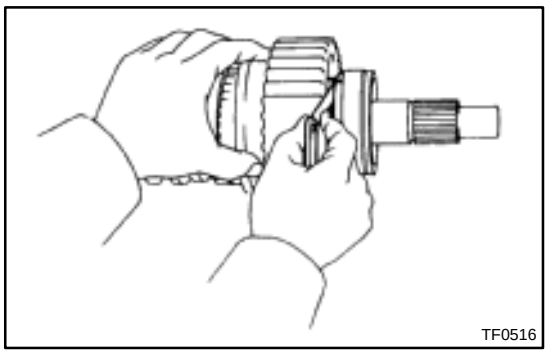
TF0516

1. INSPECT DRIVE SPROCKET THRUST CLEARANCE

Using a feeler gauge, measure the drive sprocket thrust clearance.

Standard clearance:
0.10 – 0.25 mm (0.0039 – 0.0098 in.)
Maximum clearance: 0.25 mm (0.0098 in.)

If the clearance exceeds the maximum, replace the drive sprocket.

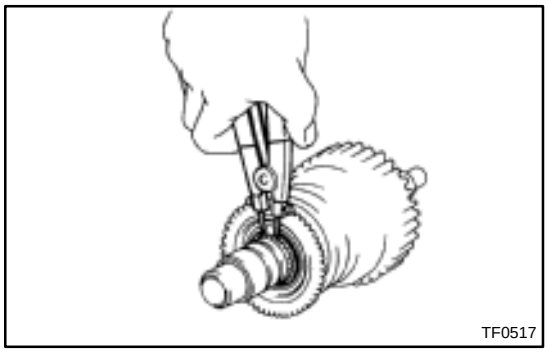
TF0517

2. M/T:
REMOVE HIGH AND LOW CLUTCH SLEEVE ASSEMBLY

(a) Using a snap ring expander, remove the snap ring.
(b) Remove the clutch sleeve and 3 shifting keys.
(c) Using a press, remove the clutch hub, 2 key springs and key retainer.

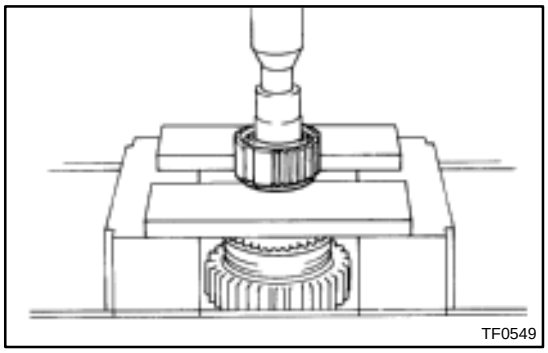
TF0549

3. A/T:
REMOVE HIGH AND LOW CLUTCH SLEEVE ASSEMBLY

(a) Using a snap ring expander, remove the snap ring.
(b) Remove the clutch sleeve.
(c) Using a press, remove the clutch hub.

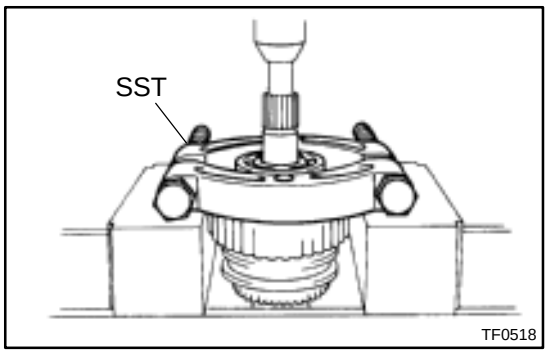

TF0518

4. w/ A.D.D.:
REMOVE BEARING, SPACER AND DRIVE SPROCKET WITH FRONT DRIVE CLUTCH SLEEVE ASSEMBLY

(a) Using SST and a press, remove the bearing.
SST 09555–55010

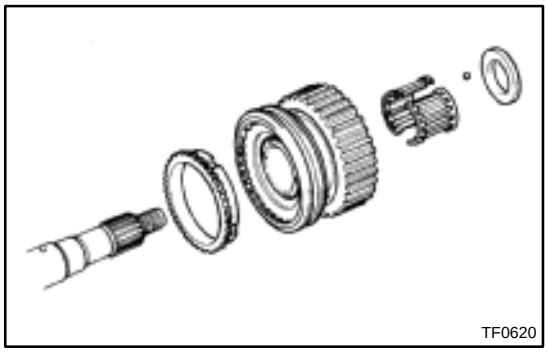
TF0620

(b) w/o One touch 2–4 selector system:
Remove these parts.
- Spacer and ball
- Drive sprocket with front drive clutch sleeve assembly
- Needle roller bearing
- Synchronizer ring

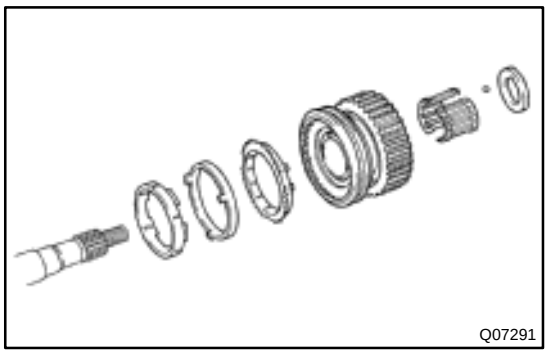

(c) w/ One touch 2–4 selector system:
Remove these parts.
- Spacer and ball
- Drive sprocket with front drive clutch sleeve assembly
- Needle roller bearing
- Synchronizer outer ring, center ring and inner ring

(d) Remove the front drive clutch sleeve assembly from the drive sprocket.

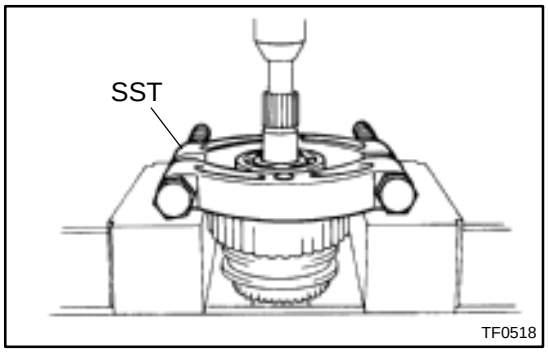

5. w/o A.D.D.:
REMOVE BEARING, SPACER AND DRIVE SPROCKET WITH FRONT DRIVE CLUTCH SLEEVE

(a) Using SST and a press, remove the bearing.
SST 09555–55010

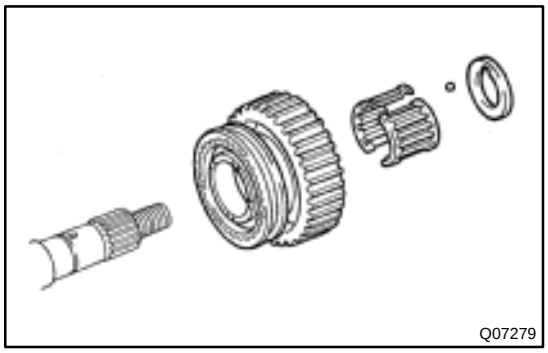

(b) Remove these parts.
- Spacer and ball
- Drive sprocket with front drive clutch sleeve
- Needle roller bearing

(c) Remove the front drive clutch sleeve from the drive sprocket.

6. w/ A.D.D.:
REMOVE 3 SHIFTING KEYS AND 2 KEY SPRINGS FROM FRONT DRIVE CLUTCH SLEEVE

TR019–01

INSPECTION

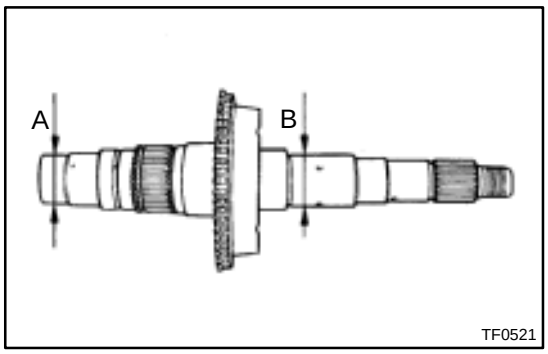

1. INSPECT REAR OUTPUT SHAFT

Using a micrometer, measure the outer diameter of the rear output shaft journal surface.

Minimum diameter:
Part A: 27.98 mm (1.1016 in.)
Part B: 36.98 mm (1.4561 in.)

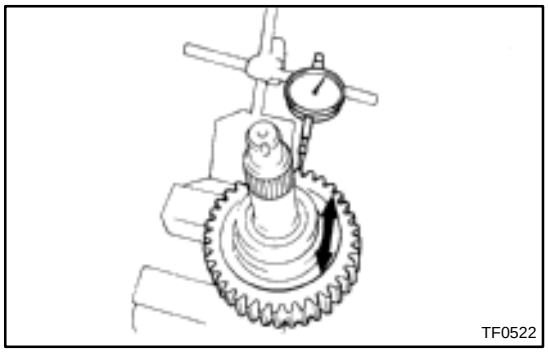

2. INSPECT DRIVE SPROCKET RADIAL CLEARANCE

Using a dial indicator, measure the radial clearance between the sprocket and shaft with the needle roller bearing installed.

Standard clearance:
0.010 – 0.055 mm (0.0004 – 0.0022 in.)
Maximum clearance: 0.055 mm (0.0022 in.)

If the clearance exceeds the maximum, replace the drive sprocket, rear output shaft or needle roller bearing.

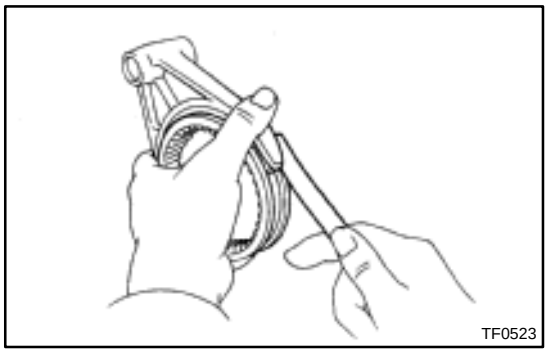

3. INSPECT FRONT DRIVE SHIFT FORK AND CLUTCH SLEEVE CLEARANCE

Using a feeler gauge, measure the clearance between the front drive shift fork and clutch sleeve.

Maximum clearance: 1.0 mm (0.039 in.)

If the clearance exceeds the maximum, replace the shift fork or clutch sleeve.

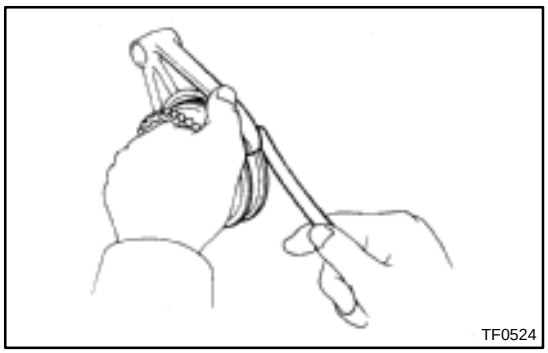

4. INSPECT HIGH AND LOW SHIFT FORK AND CLUTCH SLEEVE CLEARANCE

Using a feeler gauge, measure the clearance between the high and low shift fork and clutch sleeve.

Maximum clearance: 1.0 mm (0.039 in.)

If the clearance exceeds the maximum, replace the shift fork or clutch sleeve.

TR01A–01

REASSEMBLY

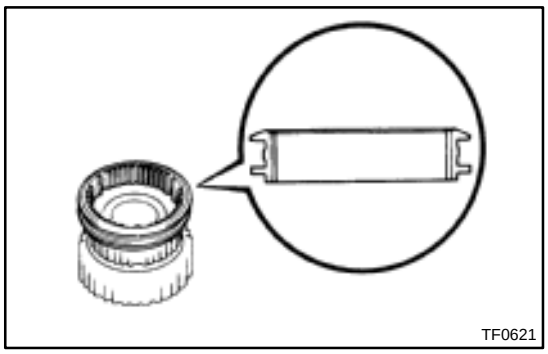
TF0621

1. w/ A.D.D.:
INSTALL FRONT DRIVE CLUTCH SLEEVE ONTO DRIVE SPROCKET

(a) Install the front drive clutch sleeve onto the drive sprocket.

HINT:
Make sure to install the clutch sleeve in the correct direction.

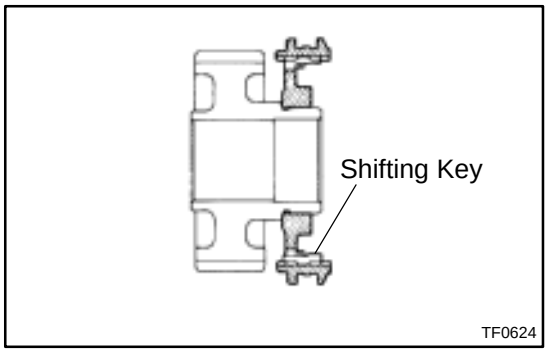

TF0624

(b) Install the 3 shifting keys and 2 springs.

NOTICE:
Install the key springs positioned so that their end gaps are not in line.

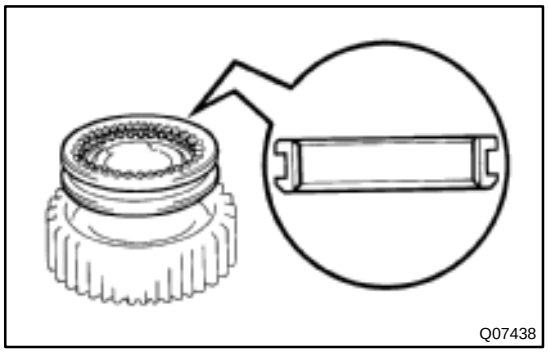
Q07438

2. w/o A.D.D.:
INSTALL FRONT DRIVE CLUTCH SLEEVE ONTO DRIVE SPROCKET

Install the front drive clutch sleeve onto the drive sprocket.

HINT:
Make sure to install the clutch sleeve in the correct direction.

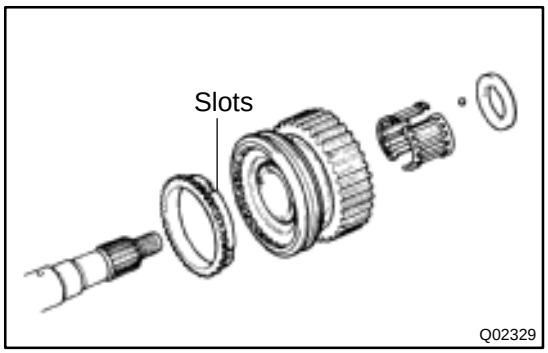

Q02329

3. w/ A.D.D.:
INSTALL DRIVE SPROCKET WITH FRONT DRIVE CLUTCH SLEEVE ASSEMBLY, SPACER AND BEARING

(a) w/o One touch 2–4 selector system:
Install these parts.
(1) Apply gear oil to the shaft and needle roller bearing.
(2) Place the synchronizer ring on the spline and align the ring slots with the shifting keys.
(3) Install the needle roller bearing in the drive sprocket.
(4) Install the drive sprocket with the front drive clutch sleeve assembly.

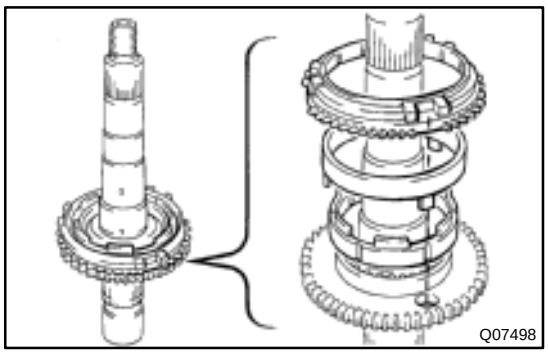

(b) w/ One touch 2–4 selector system:
Install these parts.
(1) Apply gear oil to the shaft and needle roller bearing.
(2) Install the synchronizer inner ring, center ring and outer ring.

NOTICE:
Align the slots of outer and inner rings.

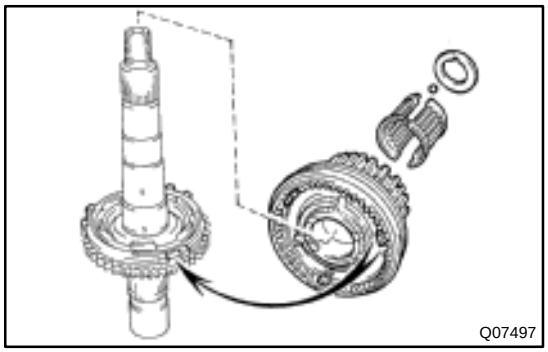

(3) Install the needle roller bearing in the drive sprocket.
(4) Install the drive sprocket with the front drive clutch sleeve assembly.

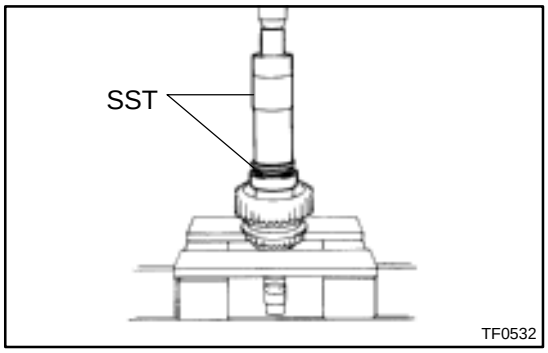

(5) Place the synchronizer ring on the gear and align the ring slots with the shifting keys.
(6) Install the spacer to align it with the ball.
(7) Using SST and a press, install a new bearing with the outer race snap ring groove toward the rear.
SST 09316–60011 (09316–00011, 09316–00071)

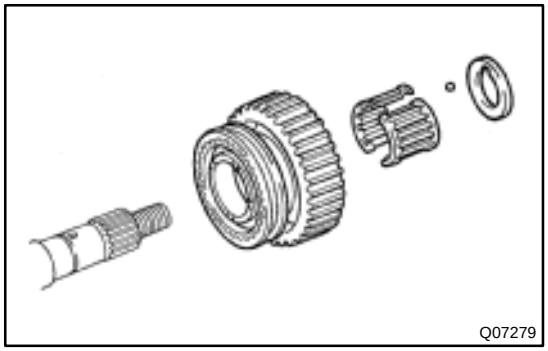

4. w/o A.D.D.:
INSTALL DRIVE SPROCKET WITH FRONT DRIVE CLUTCH SLEEVE, SPACER AND BEARING
(a) Apply gear oil to the shaft and needle roller bearing.
(b) Install the needle roller bearing in the drive sprocket.
(c) Install the drive sprocket with the front drive clutch sleeve assembly.

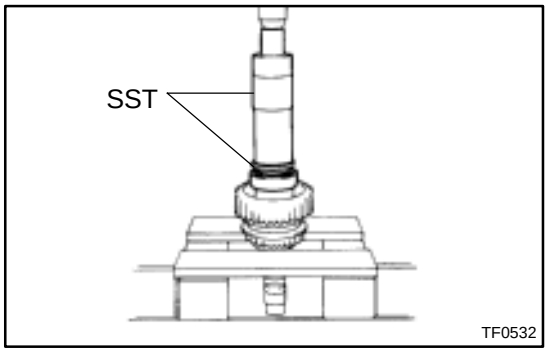

(d) Install the spacer to align it with the ball.
(e) Using SST and a press, install a new bearing with the outer race snap ring groove toward the rear.
SST 09316–60011 (09316–00011,09316–00071)

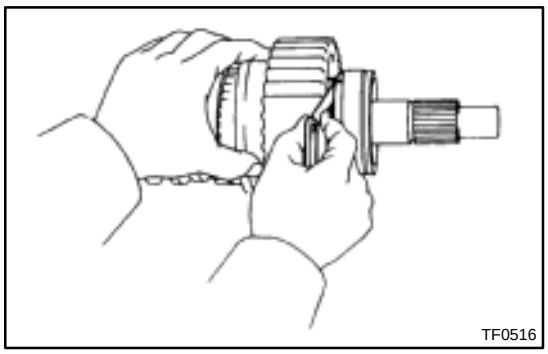
TF0516

5. INSPECT DRIVE SPROCKET THRUST CLEARANCE

Using a feeler gauge, measure the drive sprocket thrust clearance.

Standard clearance:
0.10 – 0.25 mm (0.0039 – 0.0098 in.)

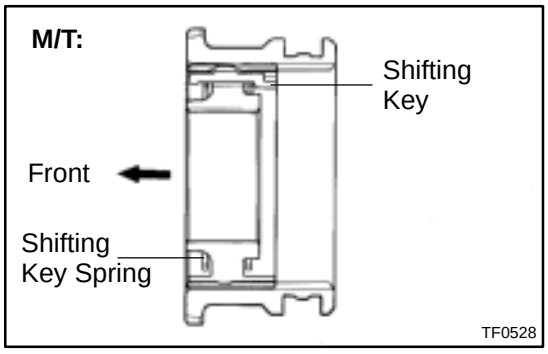

6. M/T:
INSERT HIGH AND LOW CLUTCH HUB ONTO CLUTCH SLEEVE

(a) Install the clutch hub and 3 shifting keys onto the clutch sleeve.

(b) Install the 2 shifting key springs under the shifting keys.

NOTICE:
Install the key springs positioned so that their end gaps are not in line.

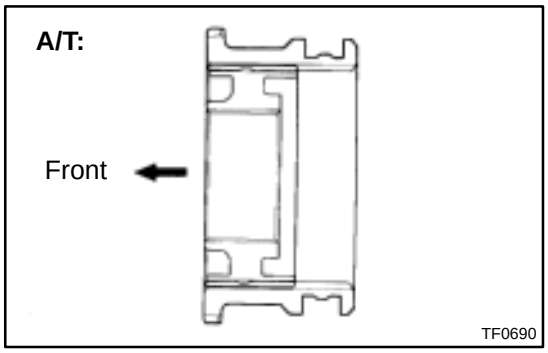

7. A/T:
INSERT HIGH AND LOW CLUTCH HUB ONTO CLUTCH SLEEVE

Install the clutch hub onto the clutch sleeve.

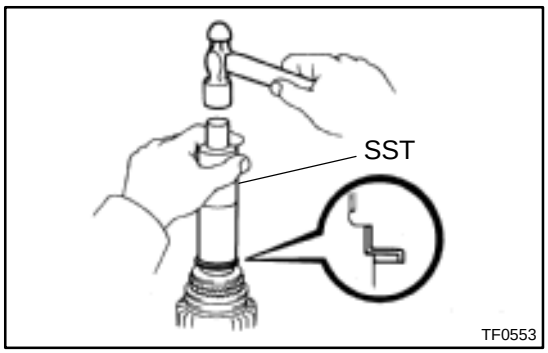

8. M/T:
INSTALL HIGH AND LOW CLUTCH HUB ASSEMBLY

(a) Using SST and a hammer, drive in a new key retainer.
SST 09316–60011 (09316–00011)

NOTICE:
Be careful not to deform or damage the key retainer.

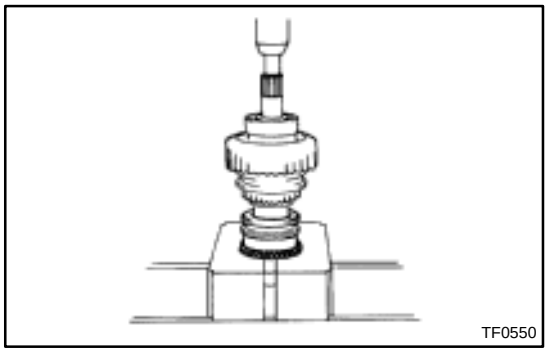
TF0550

(b) Using a press, install the high and low clutch hub assembly.

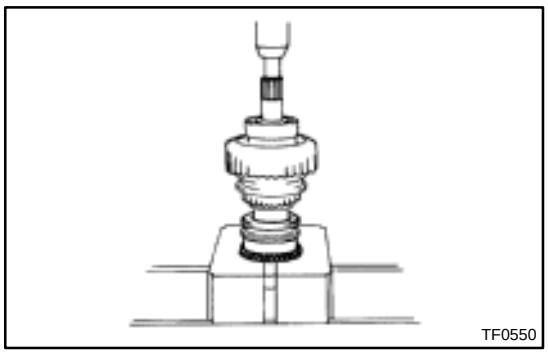

9. A/T:
INSTALL HIGH AND LOW CLUTCH HUB ASSEMBLY

Using a press, install the high and low clutch hub assembly.

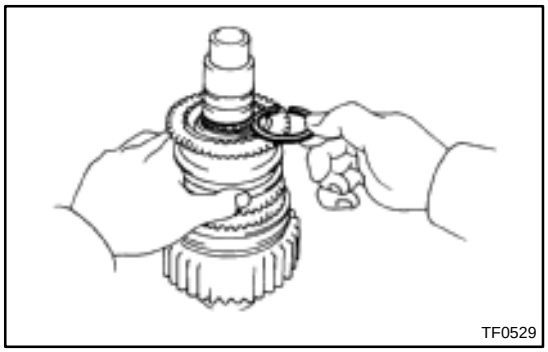

10. INSTALL SNAP RING

Select a snap ring that will allow minimum axial play and install it to the shaft.

Mark	Thickness mm (in.)
A	2.10 – 2.15 (0.0827 – 0.0846)
B	2.15 – 2.20 (0.0846 – 0.0866)
C	2.20 – 2.25 (0.0866 – 0.0886)
D	2.25 – 2.30 (0.0886 – 0.0906)
E	2.30 – 2.35 (0.0906 – 0.0925)
F	2.35 – 2.40 (0.0925 – 0.0945)
G	2.40 – 2.45 (0.0945 – 0.0965)
H	2.45 – 2.50 (0.0965 – 0.0984)
J	2.50 – 2.55 (0.0984 – 0.1004)
K	2.00 – 2.05 (0.0787 – 0.0807)
L	2.05 – 2.10 (0.0807 – 0.0827)

TRANSFER UNIT

COMPONENTS

TR00X–01

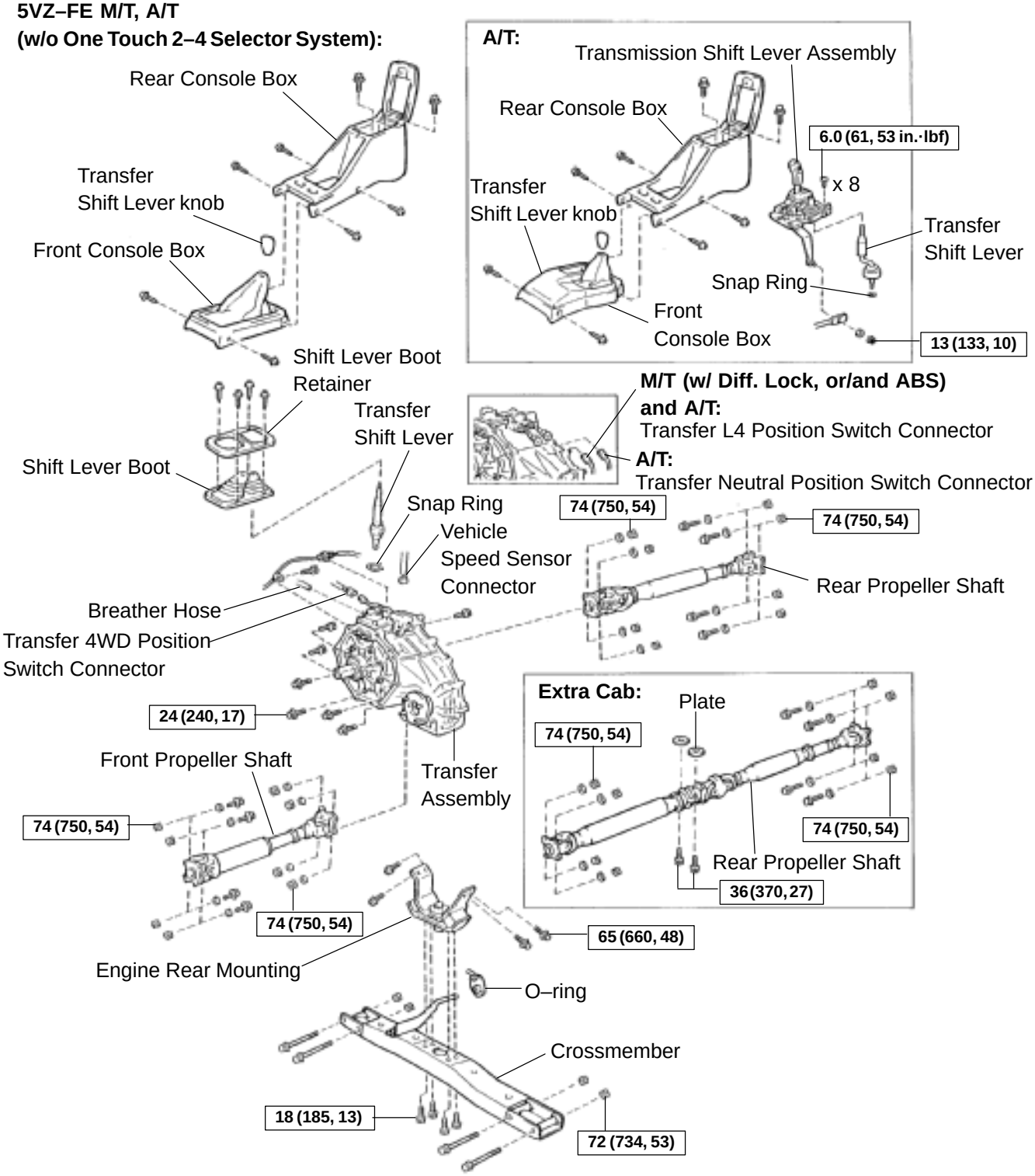

3RZ–FE A/T:

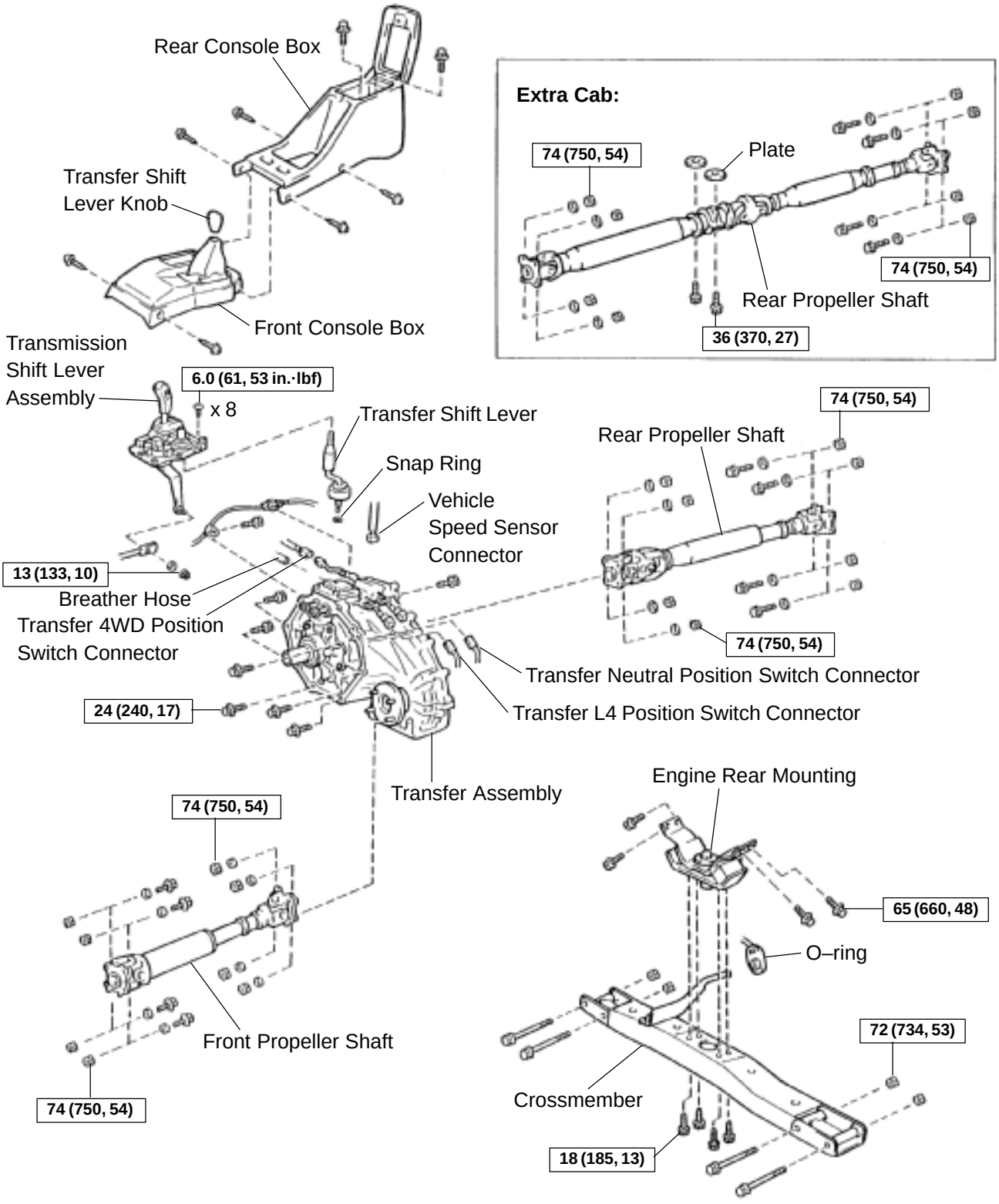

N·m (kgf·cm, ft·lbf) : Specified torque

F01886

5VZ–FE M/T, A/T
(w/ One Touch 2–4 Selector System):

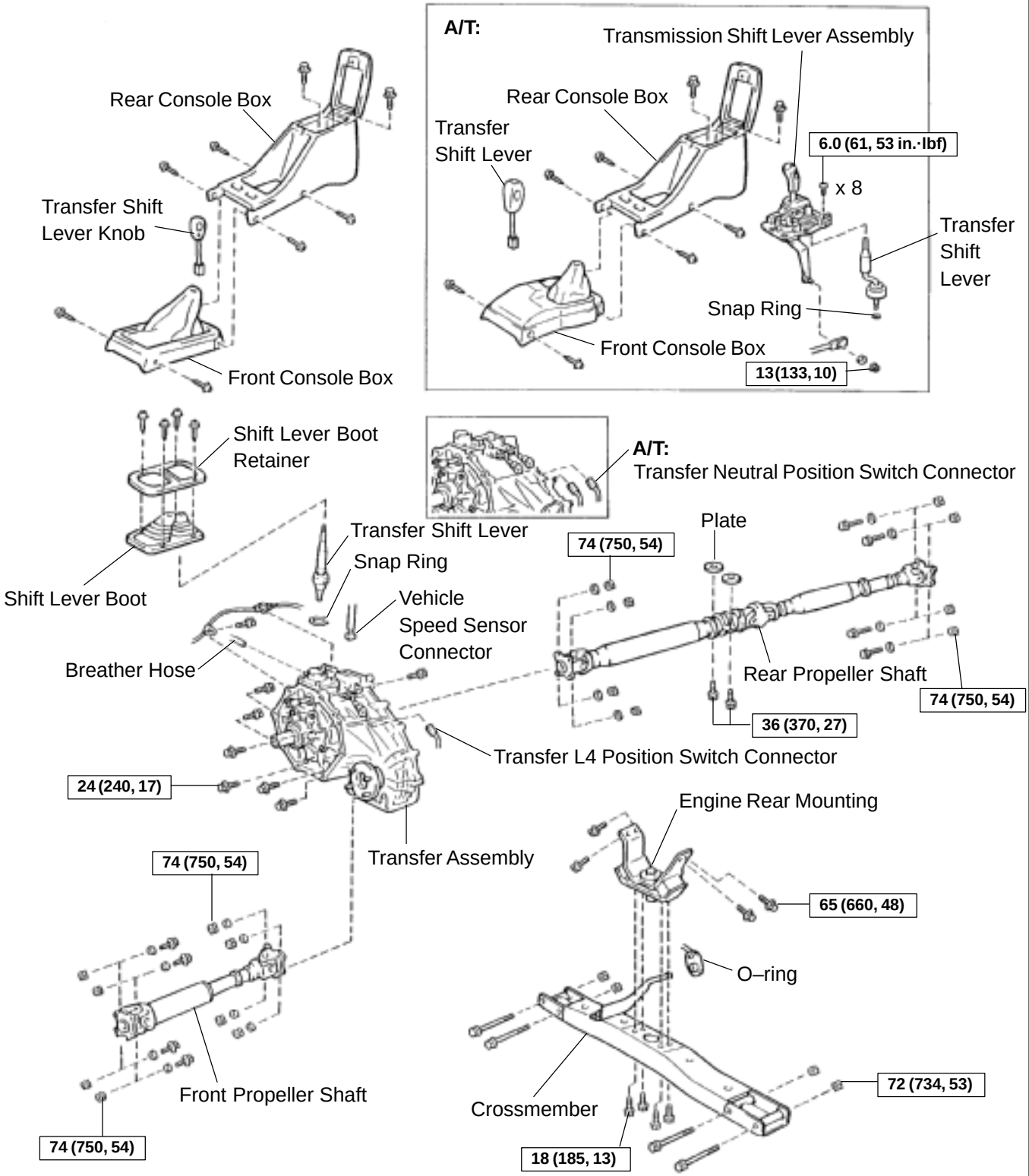

N·m (kgf·cm, ft·lbf) : Specified torque

F01887

TR00Z–01

INSTALLATION

Installation is in the reverse order of removal (See page TR–6).

1. APPLY MP GREASE TO TRANSFER ADAPTOR OIL SEAL

2. AFTER INSTALLATION, DO ROAD TEST

TRANSFER SYSTEM

TR00V–01

PRECAUTION

When working with FIPG material, you must observe the following.

- **Using a razor blade and gasket scraper, remove all the old packing (FIPG) material from the gasket surfaces.**
- **Thoroughly clean all components to remove all the loose material.**
- **Clean both sealing surfaces with a non–residue solvent.**
- **Apply FIPG in approx. 1 mm (0.04 in.) wide bead along the sealing surface.**
- **Parts must be assembled within 10 minutes of application. Otherwise, the packing (FIPG) material must be removed and reapplied.**

TROUBLESHOOTING

PROBLEM SYMPTOMS TABLE

TR00W–01

Use the table below to help you find the cause of the problem. The numbers indicate the priority of the likely cause of the problem. Check each part in order. If necessary, replace these parts.

Symptom	Suspect Area	See page
Noise	3. Oil (Level low) 4. Oil (Wrong) 5. Transfer faulty	– – TR–10
Oil leakage	1. Oil (Level too high) 2. Gasket (Damaged) 3. Oil seal (Worn or damaged) 4. O–ring (Worn or damaged)	– – TR–45 TR–45
Transfer corner braking	Center differential or transfer faulty	TR–10
Shift from 2WD to 4WD (H4 and L4) impossible	1. 4WD fuse 2. Wire harness 3. Vehicle speed sensor 4. 4WD position switch 5. 4WD indicator light 6. Actuator assembly 7. A.D.D. control system 8. 4WD control ECU 9. Transfer assembly	– – BE–38 TR–13 BE–36 TR–49 SA–72 TR–49 –
Shift from 2WD to 4WD (H4) impossible	1. 2–4 selector switch 2. Wire harness 3. 4WD control ECU	TR–49 – TR–49
Shift from 2WD to 4WD (L4) impossible	1. L4 position switch 2. Wire harness 3. 4WD control ECU	TR–13 – TR–49
Shift from 4WD (H4 and L4) to 2WD impossible	1. 4WD fuse 2. Wire harness 3. 4WD indicator light 4. Actuator assembly 5. A.D.D. control system 6. 4WD control ECU 7. Transfer assembly	– – BE–36 TR–49 SA–72 TR–49 –
Shift from 4WD (H4) to 2WD impossible	1. 2–4 selector switch 2. Wire harness 3. 4WD control ECU	TR–49 – TR–49
Shift from 4WD (L4) to 2WD impossible	1. L4 position switch 2. Wire harness 3. 4WD control ECU	TR–13 – TR–49

TR00Y–02

REMOVAL

1. M/T:

REMOVE TRANSFER SHIFT LEVER

(a) Remove the 2 bolts, 4 screws and rear console box.

(b) w/o One touch 2–4 selector system:
Remove the 2 screws, transmission shift lever knob, transfer shift lever knob and front console box.

(c) w/ One touch 2–4 selector system:
Remove the 2 screws, transmission shift lever knob, transfer shift lever knob and front console box, and disconnect the 2–4 selector connector.

(d) Remove the 4 screws, shift lever boot and retainer.

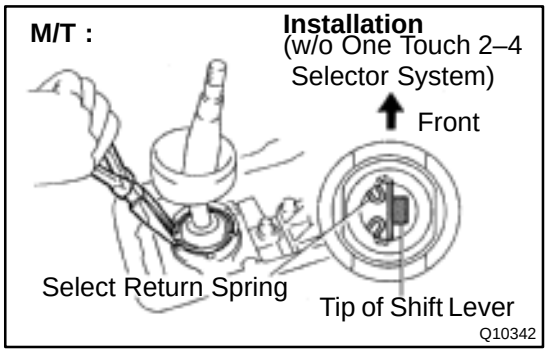

(e) Using pliers, remove the snap ring and pull out the transfer shift lever.

HINT:

- w/o One touch 2–4 selector system:
  Shift the transfer shift lever to the H4 position.
- w/ One touch 2–4 selector system:
  Shift the transfer shift lever to the H position and 2–4 selector switch OFF.
- At the time of installation, apply MP grease to the tip of the shift lever.

2. A/T:

REMOVE TRANSFER SHIFT LEVER

(a) Remove the 2 bolts, 4 screws and rear console box.

(b) w/o One touch 2–4 selector system:
Remove the 2 screws, transfer shift lever knob and front console box.

(c) w/ One touch 2–4 selector system:
Remove the 2 screws, transfer shift lever knob and front console box, and disconnect the 2–4 selector connector.

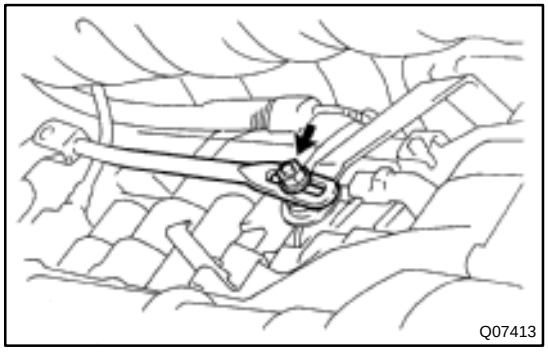

(d) Remove the nut and washer, and disconnect the shift control rod.
Torque: 13 N·m (133 kgf·cm, 10 ft·lbf)

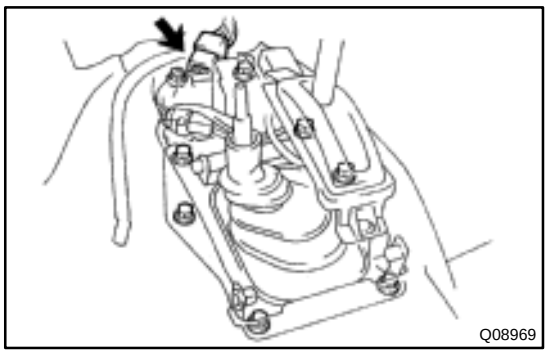
Q08969

(e) Disconnect the connector and remove the 8 screws and transmission shift lever assembly.
Torque: 6.0 N·m (61 kgf·cm, 53 in.·lbf)

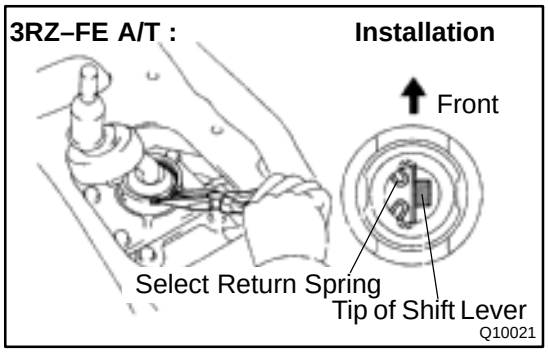

(f) Remove the shift lever.
(1) 3RZ–FE A/T:
Using pliers, remove the snap ring and pull out the shift lever.

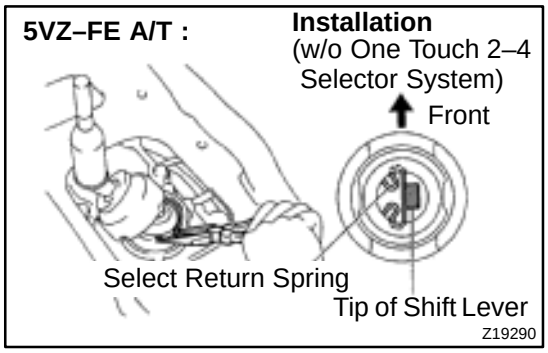

(2) 5VZ–FE A/T:
Using pliers, remove the snap ring and pull out the shift lever.

HINT:
- w/o One touch 2–4 selector system:
  Shift the transfer shift lever to the ”H4” position.
- w/ One touch 2–4 selector system:
  Shift the transfer shift lever to the ”H” position and 2–4 selector switch ”OFF”.
- At the time of installation, apply MP grease to the tip of the shift lever.

3. REMOVE BREATHER HOSE

Disconnect the breather hose from transfer upper cover and transmission control retainer.
Hose depth: 13 mm (0.51 in.) or more

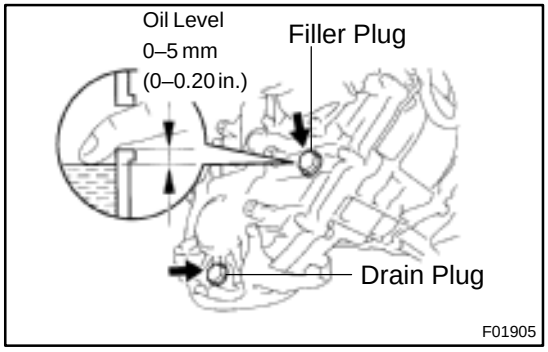

4. RAISE VEHICLE AND DRAIN TRANSFER OIL
Oil grade: API GL–4 or GL–5
Viscosity: SAE 75W–90
Capacity: 1.0 liters (1.1 US qts, 0.9 lmp. qts)

5. REMOVE FRONT AND REAR PROPELLER SHAFT
(See page PR–9)

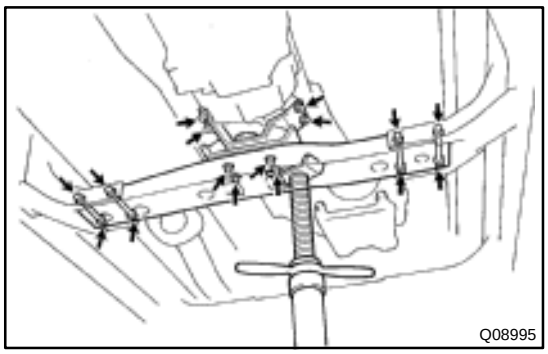
Q08995

6. REMOVE CROSSMEMBER

(a) Support the transmission rear side.

(b) Remove the 4 set bolts of the engine rear mounting.

Torque: 18 N·m (185 kgf·cm, 13 ft·lbf)

(c) Disconnect the O–ring and remove the 4 bolts, nuts and crossmember.

Torque: 72 N·m (734 kgf·cm, 53 ft·lbf)

7. REMOVE ENGINE REAR MOUNTING

Remove the 4 bolts and engine rear mounting from the transmission.

Torque: 65 N·m (660 kgf·cm, 48 ft·lbf)

8. DISCONNECT VEHICLE SPEED SENSOR, HEATED OXYGEN SENSOR CLAMP AND TRANSFER INDICATOR SWITCH CONNECTORS.

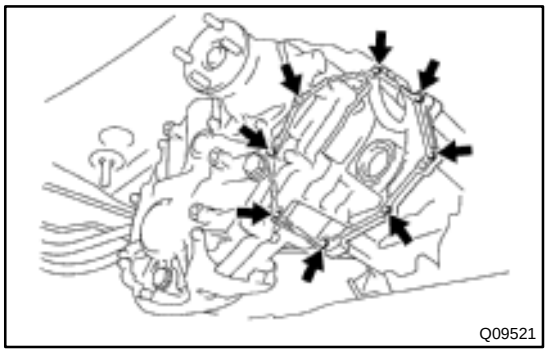
Q09521

9. REMOVE TRANSFER FROM TRANSMISSION

(a) Remove the 8 bolts of the transfer adaptor mounting.

Torque: 24 N·m (240 kgf·cm, 17 ft·lbf)

(b) Pull out the transfer down and toward the rear.

HINT:

Take care not to damage the adaptor rear oil seal with the transfer input gear spline.

TOYOTA

Technical Service BULLETIN

September 9, 2003

Title:

TRIM GARNISH LOOSE

Models:

All Models

TSB

REVISED

BODY

BO017-03

TSB REVISION NOTICE:

March 3, 2004: The TSB has been changed to include new inspection and replacement instructions.
Previous versions of this TSB should be discarded.

Introduction

Customers may experience an interior trim panel either loose or fitting poorly due to a deformed or missing panel attachment clips. When a trim garnish (A, B, C or D pillar garnish, door trim panel, etc.) is removed and reinstalled using the old clips, there is a possibility that the garnish may exhibit a loose condition. To prevent this condition from occurring, please use the following procedures.

Inspection/ Replacement Procedure

All Models – All trim panel attachment clips must be inspected prior to reassembly and replaced if any damage or wear is detected. If no damage is visible, the clip may be reused. Always check to make sure that the garnish is properly attached after reinstallation of all interior trim panels.

2002 – 2004 model year Camry and 2004 model year Solara – When removing the A–pillar garnish panels, replace the white plastic attachment clips (P/N 90467–A0025).

Applicable Vehicles

- **All models.**

Warranty Information

OP CODE	DESCRIPTION	TIME	OFP	T1	T2
N/A	Not Applicable to Warranty	–	–	–	–

TOYOTA
SCION
Technical Service BULLETIN
December 16, 2004

Title:

SENSOR INSPECTION FOR AIR CONDITIONING SYSTEM

Models:

'89 – Current All Models

TSB

Introduction

This service bulletin contains inspection procedures to more precisely confirm proper operation of the following temperature sensors of the air conditioning system. Follow the procedures in this service bulletin when inspecting these sensors. These contents will be reflected in future repair manuals.

- Room Temperature Sensor
- Ambient Temperature Sensor
- Air Duct Sensor
- Evaporator Temperature Sensor
- Solar Sensor
- Room Humidity Sensor

Applicable Vehicles

- **All 1989 – Current** model year **Toyota** vehicles.

Warranty Information

OP CODE	DESCRIPTION	TIME	OFP	T1	T2
N/A	Not Applicable to Warranty	–	–	–	–

Inspection Procedure

1. Inspect Room Temperature Sensor.

A. Measure the sensor resistance.

Resistance Value at 77°F (25°C)	1700 +/– 85Ω

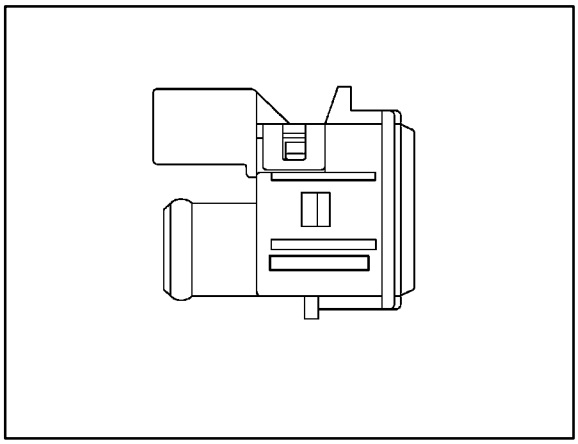

NOTE:

- **Even slightly touching the sensor may change the resistance value. Be sure to hold the connector of the sensor.**
- **When measuring, the sensor temperature must be the same as the ambient temperature.**

HINT:

As the temperature increases, the resistance decreases.

TEMPERATURE °F (°C)	SPECIFICATION kΩ
50 (10)	3.00 to 3.73
59 (15)	2.45 to 2.88
68 (20)	1.95 to 2.30
77 (25)	1.60 to 1.80
86 (30)	1.28 to 1.47
95 (35)	1.00 to 1.22
104 (40)	0.80 to 1.00
113 (45)	0.65 to 0.85
122 (50)	0.50 to 0.70
131 (55)	0.44 to 0.60
140 (60)	0.36 to 0.50

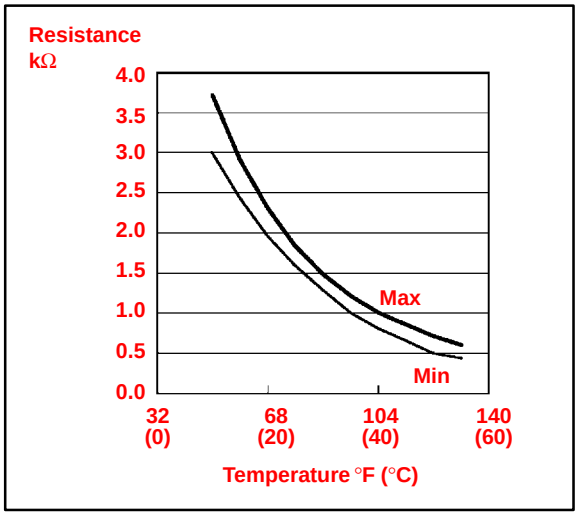

Inspection Procedure (Continued)

2. Inspect Ambient Temperature Sensor.

A. Measure the sensor resistance according to the selected graph (specification).

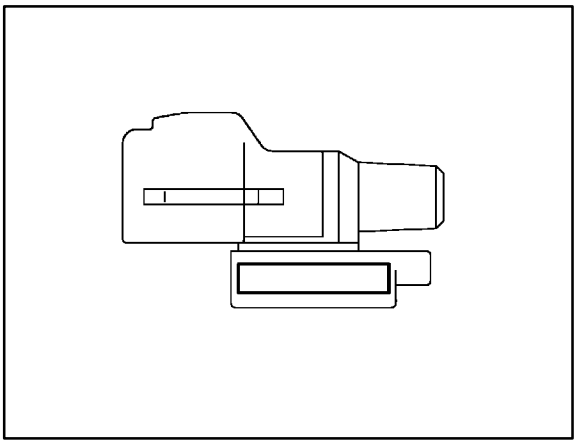

Resistance Value at 77°F (25°C)	1700 +/– 85Ω

NOTE:

- **Even slightly touching the sensor may change the resistance value. Be sure to hold the connector of the sensor.**
- **When measuring, the sensor temperature must be the same as the ambient temperature.**

HINT:

As the temperature increases, the resistance decreases.

TEMPERATURE °F (°C)	SPECIFICATION kΩ
50 (10)	3.00 to 3.73
59 (15)	2.45 to 2.88
68 (20)	1.95 to 2.30
77 (25)	1.60 to 1.80
86 (30)	1.28 to 1.47
95 (35)	1.00 to 1.22
104 (40)	0.80 to 1.00
113 (45)	0.65 to 0.85
122 (50)	0.50 to 0.70
131 (55)	0.44 to 0.60
140 (60)	0.36 to 0.50

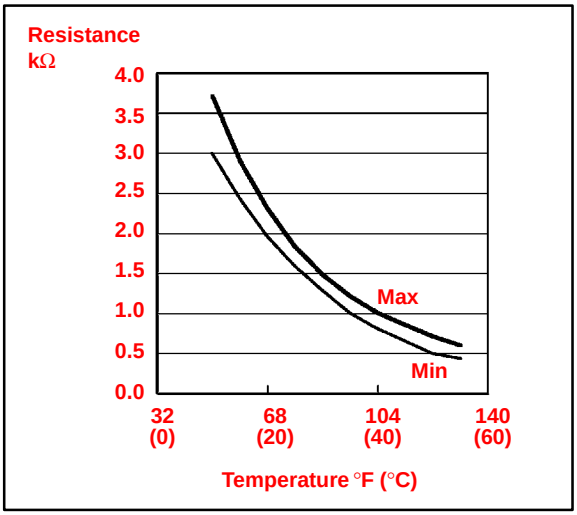

Inspection Procedure (Continued)

3. Inspect Air Duct Sensor.

A. Measure the sensor resistance according to the table and graph (specification).

NOTE:

- **Even slightly touching the sensor may change the resistance value. Be sure to hold the connector of the sensor.**
- **When measuring, the sensor temperature must be the same as the ambient temperature.**

HINT:

As the temperature increases, the resistance decreases.

TEMPERATURE °F (°C)	SPECIFICATION kΩ
50 (10)	9.48 to 10.49
59 (15)	7.50 to 8.28
68 (20)	5.95 to 6.57
77 (25)	4.77 to 5.25
86 (30)	3.85 to 4.21
95 (35)	3.12 to 3.40
104 (40)	2.53 to 2.79
113 (45)	2.06 to 2.30
122 (50)	1.69 to 1.91
131 (55)	1.39 to 1.59
140 (60)	1.15 to 1.33

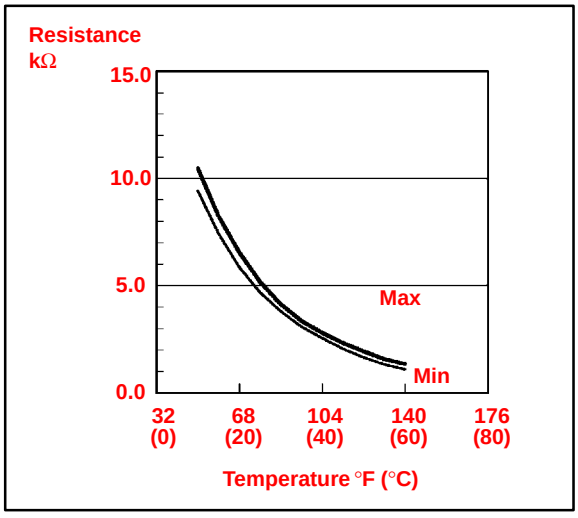

Inspection Procedure (Continued)

4. Inspect Evaporator Temperature Sensor.

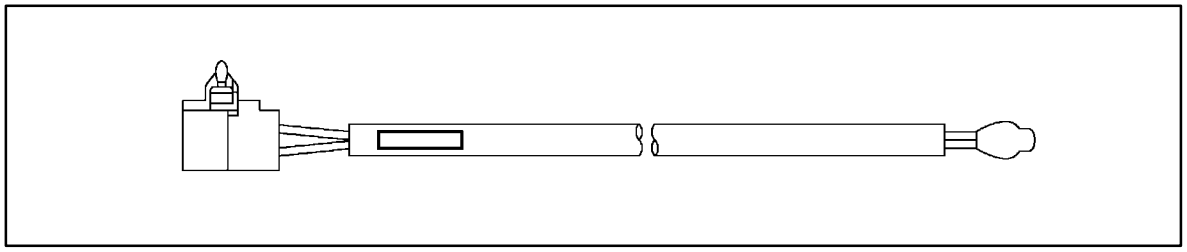

Select the appropriate graph (specification) using the following table.

NOTE:

Please inspect the sensors for model years not indicated by this bulletin, according to the instructions in the applicable repair manual.

MODEL	MODEL YEAR	COMMENTS	PART NUMBER	GRAPH
4Runner	1989 – 1993		88625–89103	2
	1994 – 1995		88625–35020	2
	1996 – 2002		88625–3A090	2
	2003		88625–35050	3
	2003 – 2005		88625–35090	4
Avalon	1995 – 1999		88625–33070	2
	2000 – 2005		88625–47011	2
Camry	1992 – 1996	CBU	88625–33070	2
		NAP		
	1997 – 2001	CBU	88625–33140	2
		NAP		
	2001	NAP	88625–17130	2
		CBU		
	2002 – 2005	All	88625–33170	3
Celica	1994 – 1995	5SFE	88625–20270	2
	1994 – 1999	7AFE or GT	88625–60050	2
	1998 – 1999	ST		
	2000 – 2005	All	88625–20510	2
Corolla	1993 – 2002	All	88625–02010	2
	2003	CBU	88625–02050	2
	2003 – 2005	CBU	88625–02051	3
		NAP		
	2005	All	88625–02070	3
ECHO	2000 – 2003		88625–52020	2
	2003		88625–52100	2

Inspection Procedure (Continued)

MODEL	MODEL YEAR	COMMENTS	PART NUMBER	GRAPH
Highlander	2001 – 2005		88625–0C010	2
Land Cruiser	1997	40th Anniversary	88625–60060	2
	1998			
	1999 – 2003	Thermistor No. 1	88625–60130	2
	1998 – 2000	Thermistor No. 2	88625–60140	2
	2003 – 2005	Thermistor No. 1	88625–47011	2
	2000 – 2005	Thermistor No. 2		
Matrix	2003 – 2004		88625–02051	3
	2005		88625–02100	1
MR2	1990 – 1991		88625–24050	2
	1992 – 1995		88625–20350	2
	2000 – 2005		88625–17130	2
Paseo	1991 – 1995		88625–24050	2
	1995 – 1999		88625–12230	2
Previa	1990 – 1997		88625–60050	2
Prius	2000 – 2003		88625–20510	2
	2004 – 2005		88625–48050	1
RAV4	1996 – 2000		88625–20340	2
	2001 – 2005		88625–42080	2
Scion tC	2005		88625–21010	2
Scion xA	2004 – 2005		88625–52070	2
Scion xB	2004 – 2005		88625–52070	2
Sequoia	2001 – 2005		88625–0C010	2
Sienna	1998 – 2000		88625–16210	2
	2001 – 2003		88625–52020	2
	2004		88625–08010	3
		XLE (Rear)	88625–0C010	2
Solara	1999 – 2003		88625–33140	2
	2004 – 2005		88625–33170	3
Supra	1993 – 1998		88625–14120	2
T100	1993 – 1998		88625–34010	2
Tacoma	1995 – 2004		88625–35030	2
Tercel	1991 – 1994		88625–24050	2
	1995 – 1999		88625–12230	2
Tundra	2000 – 2002	All	88625–0C010	2
	2003 – 2004	All	88625–0C020	2
	2004 – 2005	Double Cab Only	88625–0C010	2
	2005	All		

Inspection Procedure (Continued)

A. Measure the sensor resistance according to the selected graph (specification).

NOTE:

- **Even slightly touching the sensor may change the resistance value. Be sure to hold the connector of the sensor.**
- **When measuring, the sensor temperature must be the same as the ambient temperature.**

HINT:

As the temperature increases, the resistance decreases.

Graph 1:

TEMPERATURE °F (°C)	SPECIFICATION kΩ
14 (–10)	7.30 to 9.10
23 (–5)	5.65 to 6.95
32 (0)	4.40 to 5.35
41 (5)	3.40 to 4.15
50 (10)	2.70 to 3.25
59 (15)	2.14 to 2.58
68 (20)	1.71 to 2.05
77 (25)	1.38 to 1.64
86 (30)	1.11 to 1.32

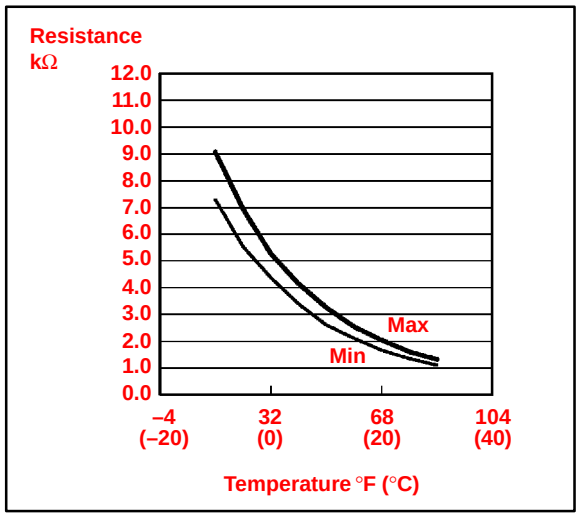

Graph 2:

TEMPERATURE °F (°C)	SPECIFICATION kΩ
14 (–10)	7.40 to 9.20
23 (–5)	5.65 to 7.00
32 (0)	4.35 to 5.40
41 (5)	3.40 to 4.20
50 (10)	2.68 to 3.30
59 (15)	2.10 to 2.60
68 (20)	1.66 to 2.10
77 (25)	1.32 to 1.66
86 (30)	1.05 to 1.35

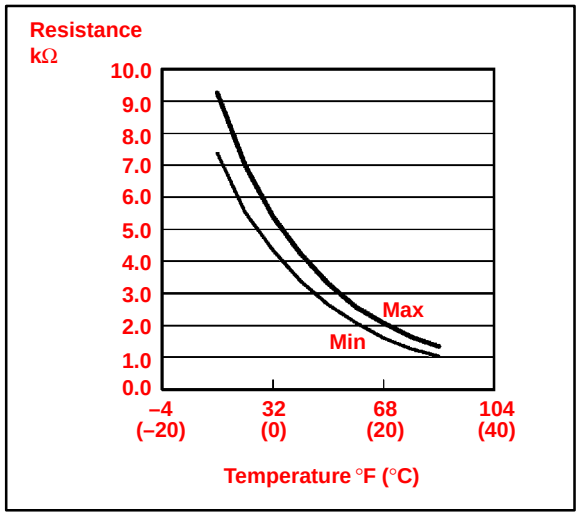

Inspection Procedure (Continued)

Graph 3:

TEMPERATURE °F (°C)	SPECIFICATION kΩ
14 (–10)	8.00 to 10.00
23 (–5)	6.15 to 7.65
32 (0)	4.75 to 5.85
41 (5)	3.70 to 4.55
50 (10)	2.91 to 3.55
59 (15)	2.32 to 2.80
68 (20)	1.85 to 2.22
77 (25)	1.48 to 1.77
86 (30)	1.20 to 1.43

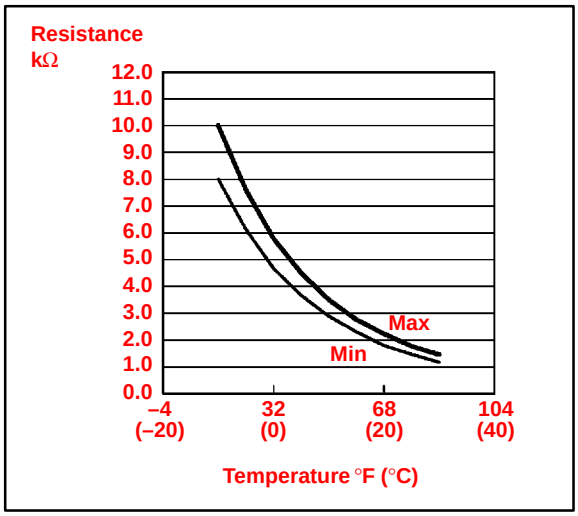

Graph 4:

TEMPERATURE °F (°C)	SPECIFICATION kΩ
14 (–10)	8.80 to 9.85
23 (–5)	6.80 to 7.55
32 (0)	5.28 to 5.86
41 (5)	4.11 to 4.56
50 (10)	3.22 to 3.56
59 (15)	2.56 to 2.82
68 (20)	2.04 to 2.24
77 (25)	1.64 to 1.80
86 (30)	1.32 to 1.46

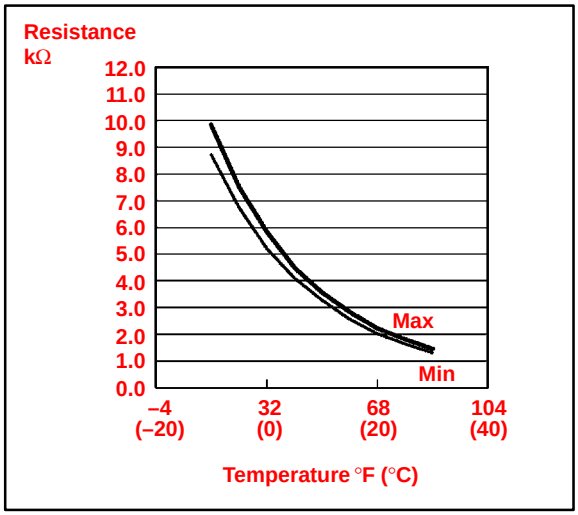

Inspection Procedure (Continued)

5. Inspect Solar Sensor.

Four types of solar sensors are used on Toyota vehicles depending on the vehicle specifications. The inspection procedure for each type of sensor differs from the others. Select the appropriate inspection procedure from the table below according to vehicle specifications and perform the inspection.

EQUIPPED WITH AUTOMATIC LIGHT CONTROL SYSTEM	A/C SYSTEM WITH RIGHT/LEFT INDEPENDENT TEMPERATURE CONTROL	INSPECTION PROCEDURE
No	No	A
No	Yes	B
Yes	Yes	C
Yes	No	D

Procedure A:

a. Disconnect the solar sensor connector.

b. Measure the resistance between terminals 1 and 2 of the solar sensor under the following conditions:

- Cover the sensor with a cloth to avoid direct light.
- Expose the sensor to light from a distance of 300 mm (11.81 in.) or less with an inspection light.

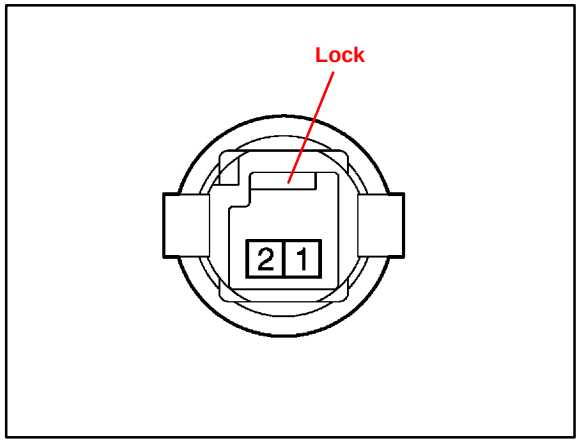

NOTE:

- **Terminal 1 of the sensor is always on the right, when the lock is facing up.**
- **When using an analog tester, connect the positive (+) lead to terminal 2 and negative (–) lead to terminal 1 of the solar sensor.**

HINT:

If the light is weak, the sensor may not react. Be sure to use an incandescent light for an inspection light.

Standard:

CONDITION	SPECIFICATION
When the sensor is covered with a cloth (to avoid direct light)	Infinite ohms
When the sensor is exposed to light	Less than infinite resistance

Inspection Procedure (Continued)

Procedure B:

a. Disconnect the solar sensor connector.

b. Measure the resistance between terminals 2 and 3 of the solar sensor under the following conditions:

- Cover the sensor with a cloth to avoid direct light.
- Expose the sensor to light from a distance of 300 mm (11.81 in.) or less with an inspection light.

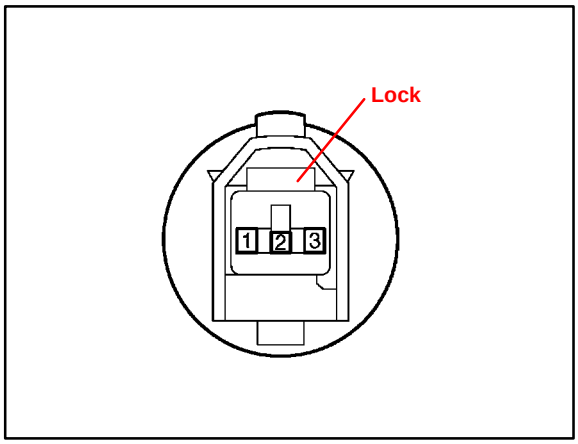

NOTE:

When using an analog tester, connect the positive (+) lead to terminal 3 and negative (–) lead to terminal 2 of the solar sensor.

HINT:

If the light is weak, the sensor may not react. Be sure to use an incandescent light for an inspection light.

Standard:

CONDITION	SPECIFICATION
When the sensor is covered with a cloth (to avoid direct light)	Infinite ohms
When the sensor is exposed to light	Less than infinite resistance

Inspection Procedure (Continued)

Procedure C:

a. Turn the ignition switch ON.

b. Measure the voltage between terminals TSR (+) and CLTE (–) of the connector under the following conditions:

- Cover the sensor with a cloth to avoid direct light.
- Expose the sensor to light from a distance of 300 mm (11.81 in.) or less with an inspection light.

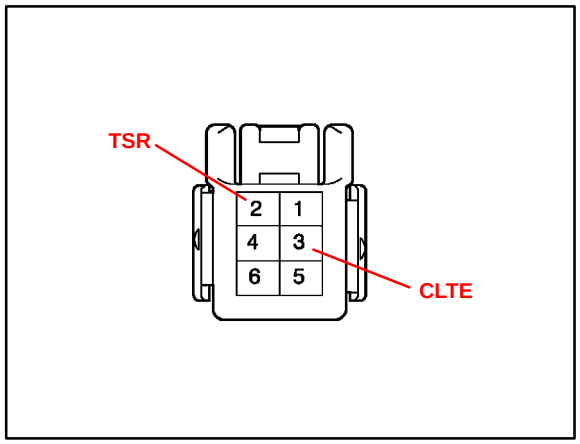

HINT:
- **If the light is weak, the sensor may not react. Be sure to use an incandescent light for an inspection light.**
- **Do not disconnect the solar sensor connector.**

Standard:

CONDITION	SPECIFICATION
When the sensor is covered with a cloth (to avoid direct light)	Below 0.8 V
When the sensor is exposed to light	4.3 +/– 0.3 V

c. Measure the voltage between terminals TSL (+) and CLTE (–) of the connector under the following conditions:

- Cover the sensor with a cloth to avoid direct light.
- Expose the sensor to light from a distance of 300 mm (11.81 in.) or less with an inspection light.

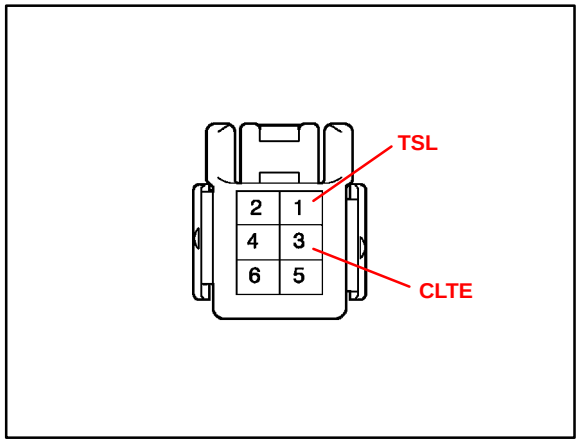

HINT:
- **If the light is weak, the sensor may not react. Be sure to use an incandescent light for an inspection light.**
- **Do not disconnect the solar sensor connector.**

Standard:

CONDITION	SPECIFICATION
When the sensor is covered with a cloth (to avoid direct light)	Below 0.8 V
When the sensor is exposed to light	4.3 +/– 0.3 V

Inspection Procedure (Continued)

Procedure D:

a. Turn the ignition switch ON.

b. Using the tester, measure the voltage between terminals TSD (+) and CLTE (–) of the connector under the following conditions:

- Cover the sensor with a cloth to avoid direct light.
- Expose the sensor to light from a distance of 300 mm (11.81 in.) or less with an inspection light.

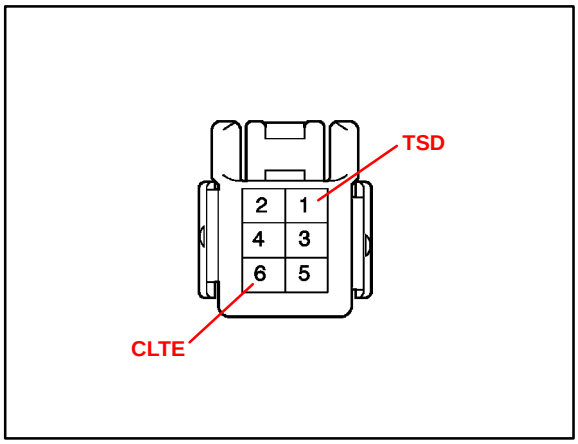

HINT:

- **If the light is weak, the sensor may not react. Be sure to use an incandescent light for an inspection light.**
- **Do not disconnect the solar sensor connector.**

Standard:

CONDITION	SPECIFICATION
When the sensor is covered with a cloth (to avoid direct light)	Below 0.8 V
When the sensor is exposed to light	4.3 +/– 0.3 V

Inspection Procedure (Continued)

6. Inspect Room Humidity Sensor.

Measure the humidity and output voltage of the humidity sensor when the sensor is installed on the vehicle and the temperature at the humidity sensor position (room temperature sensor position) is 77°F (25°C).
If the output voltage is within the specifications according to the graph and table below, the sensor is normal.

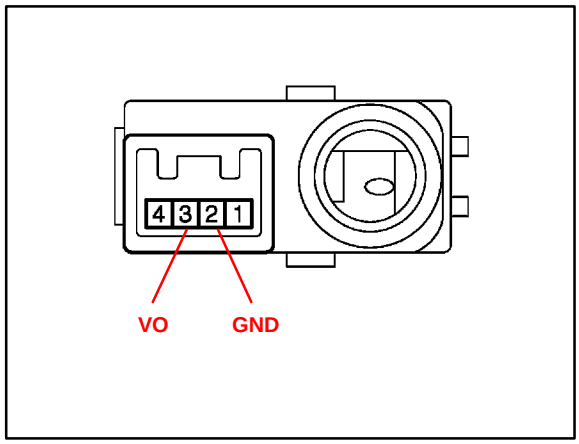

HINT:

For the inspection procedure of the room temperature sensor, refer to "Room Temperature Sensor Inspection Procedure" in this bulletin.

A. Turn the ignition switch to the ON position.

B. Measure the voltage between terminal VO (3) and GND (2) of the room humidity sensor.

C. Measure the humidity and voltage when the room temperature (humidity sensor position) is 77°F (25°C). According to the result, determine whether the sensor is normal or not.

HUMIDITY (% RH)	OUTPUT VOLTAGE AT 77°F (25°C)
10	0.70 to 1.08 V
20	0.72 to 1.57 V
30	1.13 to 1.95 V
40	1.61 to 2.24 V
50	1.99 to 2.46 V
60	2.26 to 2.66 V
70	2.48 to 2.85 V
80	2.68 to 3.04 V
90	2.87 to 3.05 V

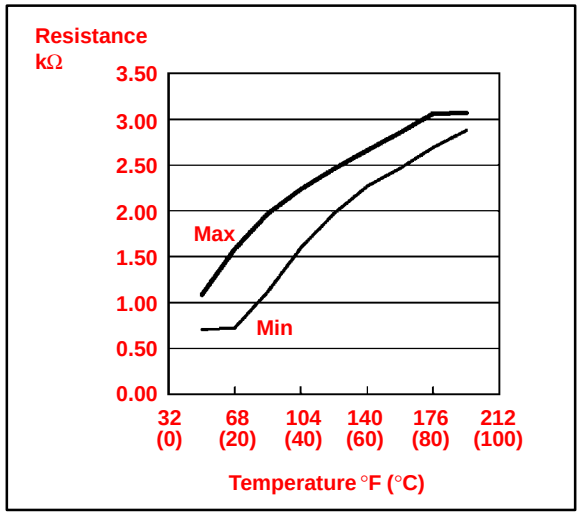

TOYOTA

Technical Service BULLETIN

July 21, 2000

Title:

A/C COMPRESSOR MAINTENANCE FOR STORED VEHICLES

Models:

All Models

TSB

Introduction

When a vehicle is stored for a long period (more than one month), the volume of oil in the A/C compressor may decrease due to oil flow into the condenser, pipes, etc.

If the A/C system is turned on at high engine RPM after a long storage period, A/C compressor damage may result.

To minimize the possibility of damage to the A/C compressor while storing a vehicle, perform the following recommended maintenance procedure at least once a month to lubricate the compressor.

Maintenance Procedure

Recommended Maintenance Procedure For A/C Compressor Lubrication:

1. Turn off A/C and blower switches prior to starting engine.
2. Start and warm–up engine until engine speed drops below 1,000 RPM.
3. Turn on the A/C system (including the rear A/C) using the following settings:
   - A/C switch: On
   - Blower Speed: High
   - Engine Speed: Below 1,000 RPM
4. Keep A/C on with engine idling for at least 30 seconds.
5. Turn off A/C system and stop engine.

Warranty Information

OP CODE	DESCRIPTION	TIME	OPN	T1	T2
N/A	Not Applicable to Warranty	–	–	–	–

Title:

TOYOTA "DINGHY" TOWING GUIDE

Models:

All Models

TSB

Introduction

The chart on the next page indicates which Toyota vehicles can be Dinghy towed (towed with four wheels on the ground) behind a Motorhome.

CAUTION:

Dinghy towing a vehicle behind a Motorhome requires special towing equipment and accessories. Please see your Motorhome Manufacturer / Service Outlet for recommended towing equipment.

Warranty Information

OP CODE	DESCRIPTION	TIME	OPN	T1	T2
N/A	Not Applicable to Warranty	–	–	–	–

Affected Vehicles

- **All Models**

YEAR	MODEL	DINGHY TOWABLE		SPEED/DISTANCE LIMITS
		M/T	A/T	
1995 – 2000	Avalon	Not Towable		–
1992 – 2000	Camry	Yes	No	None
1999 – 2000	Solara	Yes	No	None
1994 – 1999	Celica	Yes	No	None
2000	Celica GT	Yes	No	None
2000	Celica GT–S	Yes	–	None
		–	Yes	55 MPH / 200 Miles
1993 – 2000	Corolla	Yes	No	None
2000	ECHO	Yes	No	None
1992 – 2000	Land Cruiser	Not Towable		–
2000	MR2 Spyder	Yes	N/A	None
1996 – 1998	Paseo	Yes	No	None
1992 – 1997	Previa 2WD	Not Towable		–
1992 – 1997	Previa 4WD	Not Towable		–
1998 – 2000	Sienna	Not Towable		–
1994 – 1999	Supra	Not Towable		–
1996 – 2000	RAV4 2WD	Yes	No	None
1996 – 2000	RAV4 4WD	Yes	No	None
1995 – 1998	Tercel	Yes	No	None
1996 – 2000	4Runner 2WD	Not Towable		–
1996 – 2000	4Runner 4WD	Not Towable		–
1995 – 2000	Tacoma 2WD	Not Towable		–
1995 – 2000	Tacoma 4WD	Not Towable		–
1993 – 1999	T100 2WD	Not Towable		–
1993 – 1999	T100 4WD	Not Towable		–
2000	Tundra 2WD	Not Towable		–
2000	Tundra 4WD	Not Towable		–

NOTE:

After "Dinghy" Towing, or at the recommended distance limits, let the Engine idle for more than 3 minutes before operating the vehicle or resuming towing.

NOTE:

Vehicles that are Dinghy towable will not sustain internal damage to the transmission or transfer components, as long as speed/distance limits are observed. The transmission must be placed in the "neutral" position when Dinghy towing. Dinghy towing these vehicles does not eliminate the possibility of damage to other vehicle systems (Body, Chassis, Electrical Systems, etc.).

TOYOTA

Technical Service BULLETIN

October 18, 2002

Title:

TRAILER WIRE HARNESS

Models:

4Runner, Highlander, Land Cruiser, RAV4, Sienna, Tacoma & Tundra

TSB

Introduction

Beginning in 2000, the accessory trailer wire harness supplier was changed and a new design was adopted which incorporated in–line fuses in the tow wire harness in addition to the vehicle fuse. This bulletin identifies the fuse location to supplement dealer diagnostics troubleshooting. In the future please reference the accessory trailer wire harness Owner's Guide for the vehicle specific diagnostic procedures. As a general note please place the towing wire harness Owner's Guide in glove box after every DIO installation.

Applicable Vehicles

- **4Runner, Highlander, Land Cruiser, RAV4, Sienna, Tacoma, and Tundra** vehicles using the **Accessory Towing Receiver Hitch and factory Towing Receiver Hitch** option. (See table below for applicable model years.)

Accessory Wire Harness Kit Information

VEHICLE	MODEL YEAR	ACCESSORY KIT PART NUMBER	LOCATION	FUSE CAPACITY
4Runner	2001–2002	08921–35860	Engine Room Junction Block	25A (Towing)
Highlander	2002–2003	08921–48040	Engine Room Junction Block	20A (Towing)
Land Cruiser	2000*	08921–60820	LH Cowl Junction Block (LH Kick Panel)	15A (Tail) 15A (Stop)
	2001–2002	08921–60840	LH Rear Quarter Panel	30A
RAV4	2001	08921–42860	RH Rear Quarter Panel	In–Line 5A (Tail) 5A (Stop)
Sienna	2000–2003	08921–08860	Rear Hatch Scuff Plate	In–Line 5A (Tail) 5A (Stop) 5A (LH Turn) 5A (RH Turn)
Tacoma	1996–2001	08921–04810–AA	Regular & Double Cab: LH Rear Cab Back Panel	
	2002	08921–04860	Xtracab: Jack Storage Compartment	
Tundra	2000–2002	81985–35060	Engine Room (Battery & Terminal)	30A

* Applies to 2000 model year vehicles produced on or after VIN JT3HT05JXY0094690.

Warranty Information

OP CODE	DESCRIPTION	TIME	OFP	T1	T2
N/A	Not Applicable to Warranty	–	–	–	–

Wire Harness Fuse Location

4Runner

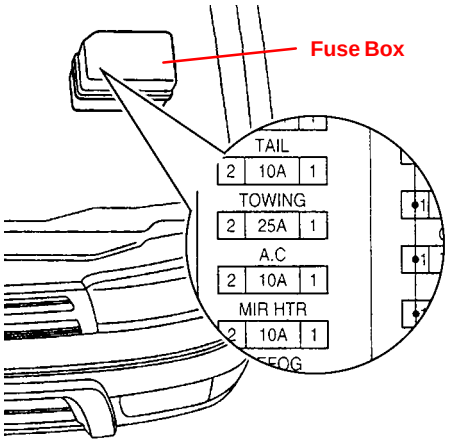

Highlander

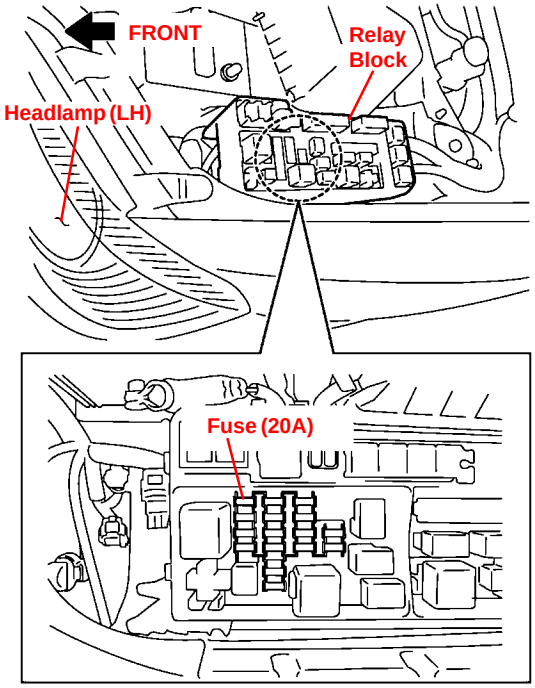

Land Cruiser ('00 MY)

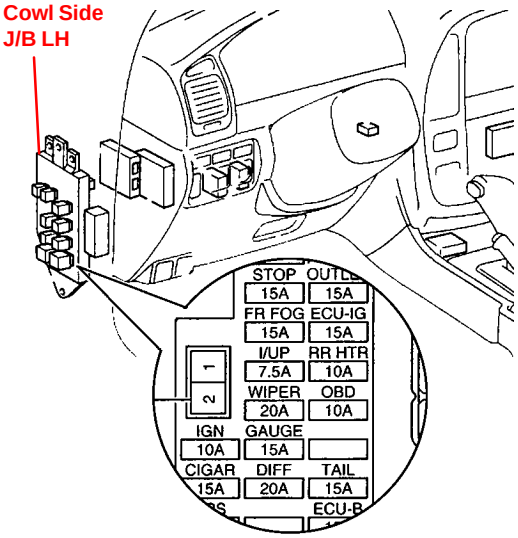

Land Cruiser ('01–'02 MY)

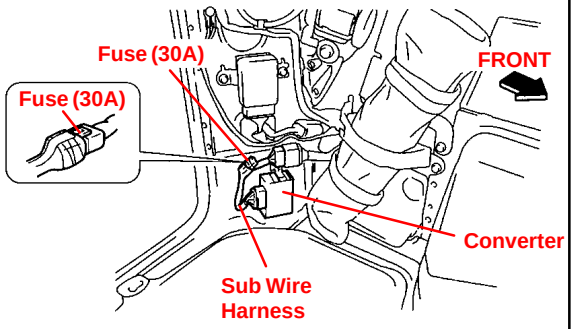

Wire Harness Fuse Location (Continued)

RAV4

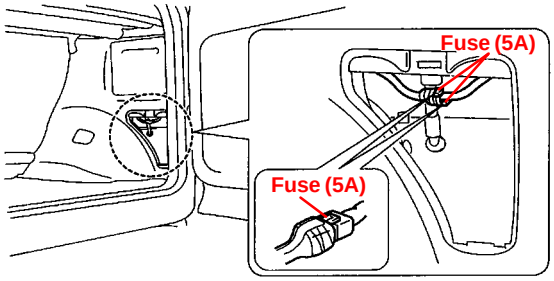

Sienna

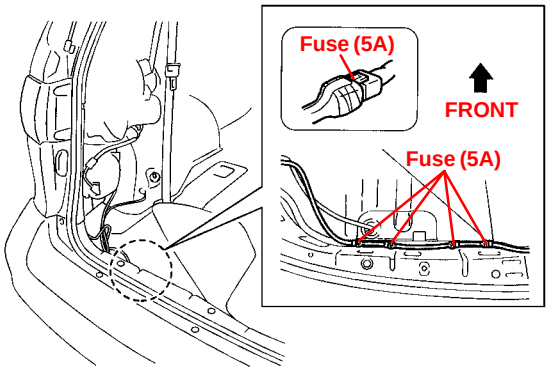

Tacoma (Regular & Double Cab)

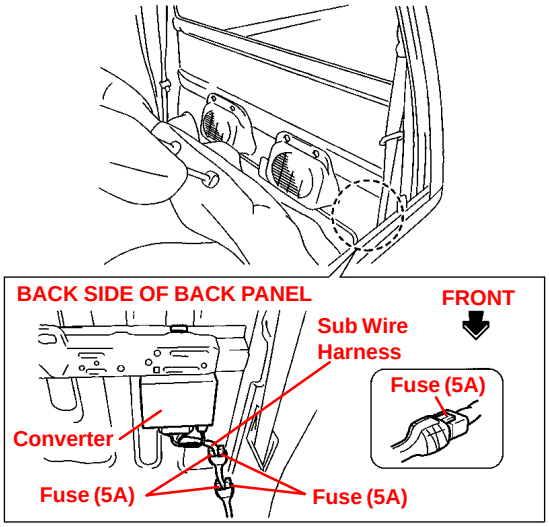

Tacoma (Xtracab)

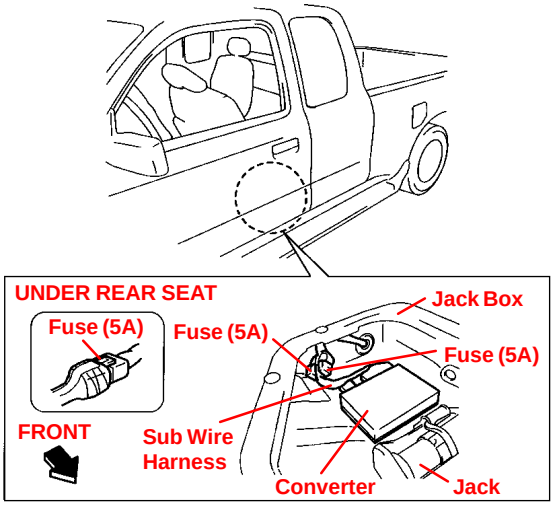

Tundra

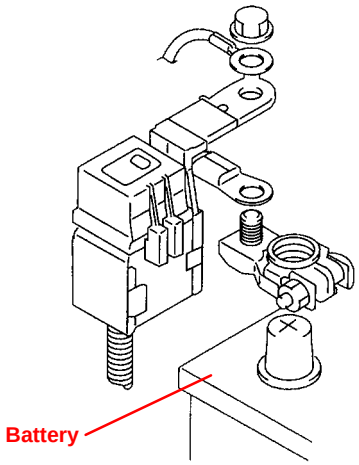

Trouble-shooting Procedure

Perform the following procedure if there is any lamp malfunction.

CAUTION:
Ensure that lamp switch is OFF before taking measures or checking.

Troubleshooting Chart 1: Land Cruiser ('00), RAV4, Sienna, & Tacoma

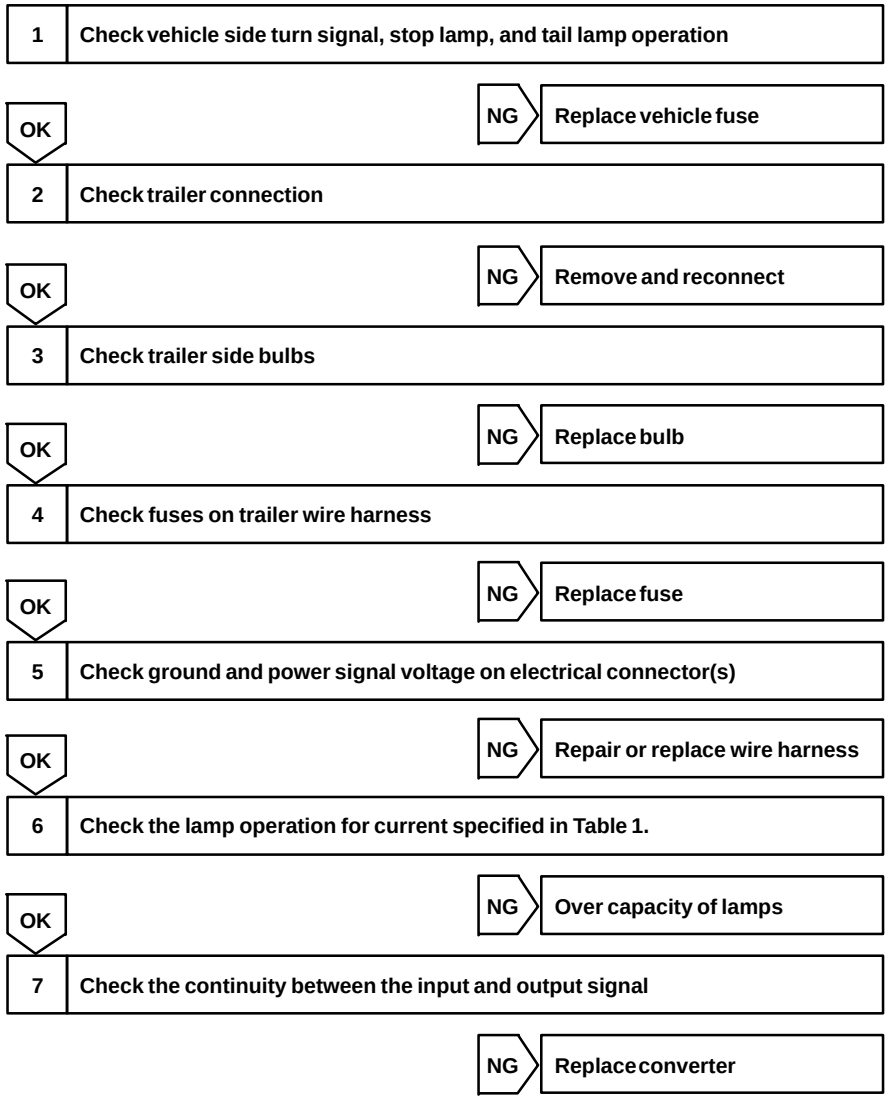

Table 1: Rated Current for Land Cruiser ('00), RAV4, Sienna, & Tacoma

MODEL	RATED CURRENT	
RAV4, Sienna, Tacoma	TAIL	MAX 3.5A
	STOP/TURN (RIGHT)	MAX 2.1A
	STOP/TURN (LEFT)	MAX 2.1A
Land Cruiser ('00)	TAIL	MAX 5.5A
	STOP/TURN (RIGHT)	MAX 4.2A
	STOP/TURN (LEFT)	MAX 4.2A

Trouble-shooting Procedure (Continued)

Perform the following procedure if there is any lamp malfunction.

CAUTION:
Ensure that lamp switch is OFF before taking measures or checking.

Troubleshooting Chart 2: 4Runner, Highlander, Land Cruiser ('01–'02), & Tundra

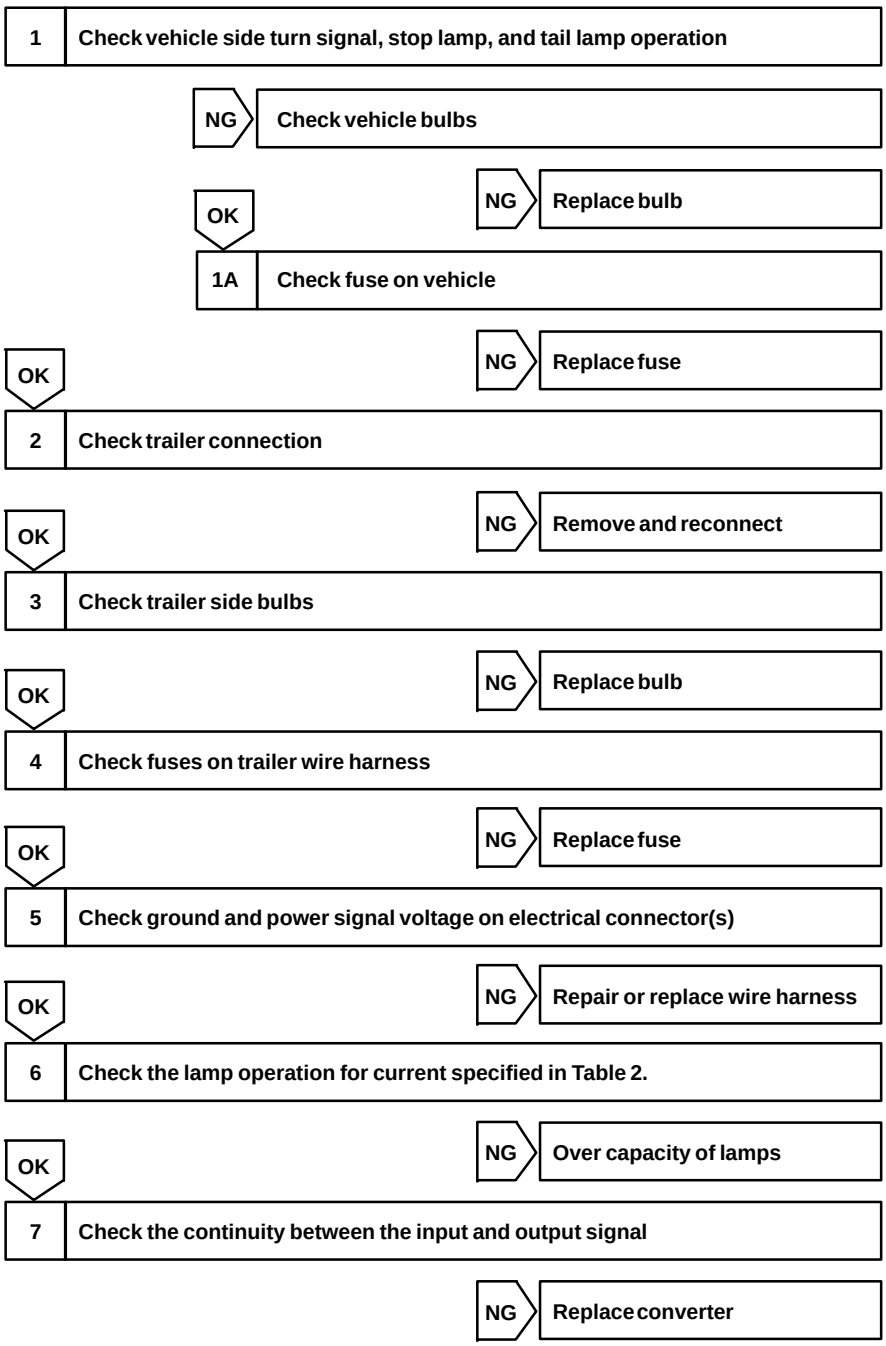

Table 2: Rated Current for 4Runner, Highlander, Land Cruiser ('01–'02), & Tundra

MODEL	RATED CURRENT	
4Runner, Highlander, Land Cruiser ('01–'02), Tundra	TAIL	MAX 7.8A
	STOP/TURN (RIGHT)	MAX 4.5A
	STOP/TURN (LEFT)	MAX 4.5A

TOYOTA

Technical Service BULLETIN

October 23, 2002

Title:

TAILGATE LOCK (POP AND LOCK) TORQUE CHANGE

Models:

'95 Through Current Model Year Tacoma

TSB

Introduction

The torque specifications for the tailgate lock (pop and lock) assembly on 1995 through current model year Tacoma trucks have been changed as described below.

Applicable Vehicles

- **1995 through current** model year **Tacoma** trucks.

Parts Information

PREVIOUS PART NUMBER	CURRENT PART NUMBER	PART NAME	QTY
N/A	PTS17–35020	Tacoma Tailgate Lock (Pop & Lock)	1

Required Tools & Material

TOOLS & MATERIALS	QUANTITY
10 mm Deep Socket	1
Torque Wrench	1

Repair Procedure

The revised nominal "handle mounting screw" torque specification has been **reduced from 108 in.•lbf** to **48 in.•lbf** (Torque Range = 60 in.•lbf to 36 in.•lbf) and is effective immediately (reference DIO Installation Instructions, Rev A [5/31/02], Section II, step A.7.i.).

The new nominal installation torque of 48 in.•lbf (Torque Range = 60 in.•lbf to 36 in.•lbf), has been revised in the DIO Installation Instructions as of **August 2, 2002**.

Warranty Information

OP CODE	DESCRIPTION	TIME	OFP	T1	T2
N/A	Not Applicable to Warranty	–	–	–	–

TOYOTA

Technical Service BULLETIN

January 7, 2000

Title:

REAR QUARTER PANEL PAINT CHIP PROTECTION

Models:

'95 – '00 Tacoma

TSB

BODY

BO001–00

Introduction

A new anti–chip tape has been developed to help prevent repeat occurrences of paint chipping on the rear quarter panels of Tacoma compact pick–up trucks caused by the impact of road debris.

Applicable Vehicles

- **All 1995 – 2000** model year **Tacoma vehicles.**

Parts Information

PREVIOUS PART NUMBER	CURRENT PART NUMBER	PART NAME
– –	58741–04010	Protector, Rear Wheel Extension, RH
– –	58742–04010	Protector, Rear Wheel Extension, LH

Repair Procedure

NOTE:

This repair is to be used in conjunction with repainting of the truck bed due to excessive chipping of the rear quarter panel.

NOTE:

Apply anti–chipping tape <u>only</u> after the surface has been repainted, cured, and is not hotter than 38˚C (100˚F).

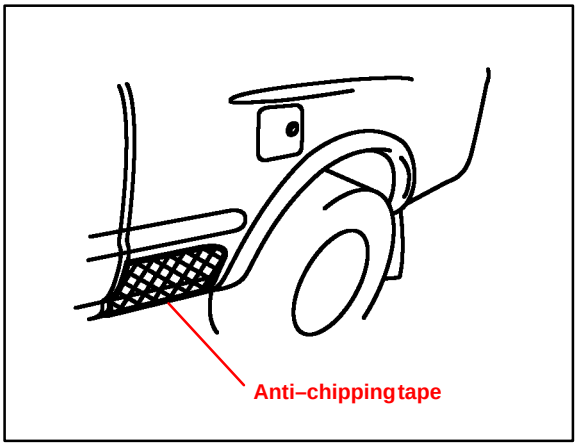

Apply the anti–chipping tape directly to the painted surface of the rear quarter panel between the front edge of the rear quarter panels and the rear tires as shown.

Warranty Information

OP CODE	DESCRIPTION	TIME	OPN	T1	T2
N/A	Not Applicable to Warranty	–	–	–	–

TOYOTA

Technical Service BULLETIN

January 21, 2000

Title:

SEAT BELT EXTENDER

Models:

'98 – '00 Model Year

TSB

BODY

BO002–00

Introduction

Toyota customers who find it necessary to increase the length of their seat belts may obtain Seat Belt Extenders at **no cost** through their local Toyota dealer.

- The extender is available in 6 inch, 9 inch, 12 inch, 15 inch and 18 inch lengths.
- The extender is available **only in black**.
- Owners are informed of the seat belt extender availability through the Toyota Owner's Manual included in each vehicle.

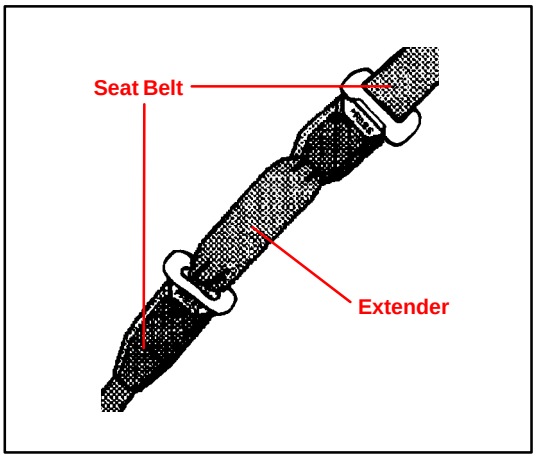

The customer *(individual requiring the extender)* must visit a Toyota dealership to have the required measurements made and to complete the seat belt extender worksheet. The worksheet will allow the proper fitting and selection of a seat belt extender for the customer. The dealership personnel should then determine the applicable part number and place a ***Critical Order*** through the ***TDN Parts Network.***

The dealership service department should complete the affixed Seat Belt Extender Label and review the "owner instruction sheet" with the customer. The dealership should give a copy of the completed worksheet to the customer and keep the original in the customer's file.

To assure utmost owner satisfaction, it is recommended that a dealership designate one person to coordinate all activities related to the seat belt extender issue.

From past sales history, it is recommended that dealerships **do not stock** Seat belt extenders due to low demand and the need for customer fitting.

This bulletin contains the following information:

Procedure and Sample Label.....Page 2
Application Charts .....Page 3–4
Part Number Information.....Page 5
Owner Instructions.....Page 6
Seat Belt Extender Worksheet.....Page 7

Applicable Vehicles

- All **Toyota** models, **1998** through **2000** model years.

Warranty Information

OP CODE	DESCRIPTION	TIME	OPN	T1	T2
N/A	Not Applicable to Warranty	–	–	–	–

Procedure

1. Owner requests a seat belt extender from dealer.
2. Dealer verifies the need for a seat belt extender and obtains a current copy of this TSB and copies the worksheet.
3. Dealer measures the customer and completes the worksheet. Dealer determines the correct part number and places a Critical Order for the part through the TDN Parts Network.
4. Dealer receives seat belt extender and calls the customer in to check fit of the part.
5. If the seat belt extender fit is good, dealership personnel completes the customer information label on the part, explains usage of the part, and gives the customer a copy of the completed worksheet.
6. Dealer places a copy of the completed worksheet in the customer's records.

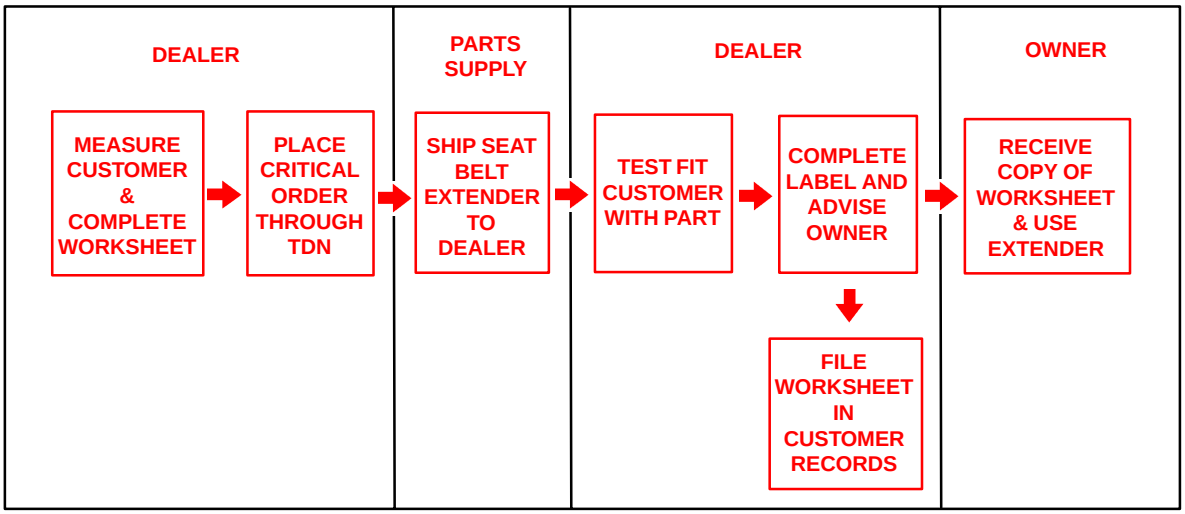

Sample Seat Belt Extender Customer Information Label

CAUTION

THIS SEAT BELT EXTENDER IS TO BE USED ONLY BY: _____

ON VEHICLE: _____

VIN: _____

SEATING POSITION: _____

USE BY OTHERS, OR IN ANOTHER SEATING POSITION, OR IN ANOTHER VEHICLE COULD REDUCE SEAT BELT RESTRAINT IN AN ACCIDENT AND RESULT IN PERSONAL INJURY.

Front Seat Belt Extender Applications

FRONT SEAT – EXTENDER APPLICATION				
MODEL	**TYPE**	**’00**	**’99**	**’98**
RAV4	—	R–5	R–5	R–5
RAV4 EV	—	R–5	R–5	R–5
TERCEL	RH	—	R–5	R–5
	LH			
PASEO	COUPE (RH)	—	R–5	R–5
	COUPE (LH)			
	CONVERTIBLE	—	N–6	N–6
ECHO	—	K–5	—	—
COROLLA	TMMC PRODUCTION	Q–4	Q–4	Q–4
	NUMMI PRODUCTION			
MR2	—	N–6	—	—
CELICA	LIFTBACK & COUPE	N–6	N–6	N–6
	CONVERTIBLE	—		
CAMRY	TMC PRODUCTION	Q–4	Q–4	Q–4
	TMMK PRODUCTION			
CAMRY SOLARA	COUPE	Q–4	Q–4	—
	COVERTIBLE	Q–4	—	—
SUPRA	—	—	—	R–3
AVALON *1	—	T–1	Q–2	Q–2
SIENNA	—	Q–4	Q–4	Q–4
TACOMA *1	—	S–1	S–1	S–1
4RUNNER	—	K–5	K–5	K–5
LAND CRUISER	—	K–5	K–5	K–5
T100 *1	—	—	—	R–5
TUNDRA *1	—	Q–4	—	—

*1 The extender must not be used for the center seat belt of Avalon, Tacoma, T100 and Tundra which have bench seats.

Rear Seat Belt Extender Applications

REAR SEAT – EXTENDER APPLICATION				
MODEL	**TYPE**	**’01**	**’00**	**’99**
RAV4	W/TOKAI RIKA	R–5*1	R–5*1	R–5*1
	W/QSS	Q–4*2	Q–4*2	Q–4*2
RAV4 EV	—	Q–4	Q–4	Q–4
TERCEL	W/TOKAI RIKA	—	R–5*1	R–5*1
	W/QSS	—	Q–4*2	Q–4*2
PASEO	COUPE	—	R–5	R–5
	CONVERTIBLE (RH)	—	N–3	N–1*3, N–3*4
	CONVERTIBLE (LH)	—	N–6	N–5*3, N–6*4
ECHO	—	R–5	—	—
COROLLA	TMMC PRODUCTION	Q–4	Q–4	Q–4
	NUMMI PRODUCTION	T–1	T–1	T–1
CELICA	LIFTBACK & COUPE	N–6	N–6	N–6
	CONVERTIBLE (RH)	—	N–1	N–1
	CONVERTIBLE (LH)	—	N–5	N–5
CAMRY	TMC PRODUCTION	Q–4	Q–4	Q–4
	TMMK PRODUCTION			
CAMRY SOLARA	COUPE	Q–4	Q–4	—
	CONVERTIBLE	Q–4	—	—
SUPRA	—	—	—	R–3
AVALON	—	T–1	Q–2	Q–2
SIENNA	—	Q–4	Q–4	Q–4
TACOMA	XTRACAB	A–2	A–2	A–2
4RUNNER	—	R–5	R–5	R–5
LAND CRUISER	—	K–5	K–5	K–5
T100	XTRACAB	—	—	K–4
TUNDRA	ACCESS CAB	Q–4	—	—

*1 This seat belt was supplied by TOKAI RIKA. Make sure that the I/D mark on the back side of the seat belt buckle is the same as shown.

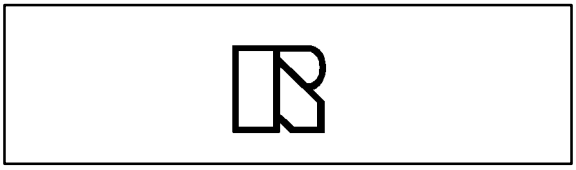

*2 This seat belt was supplied by QSS. Make sure that the I/D mark on the back side of the seat belt buckle is the same as shown.

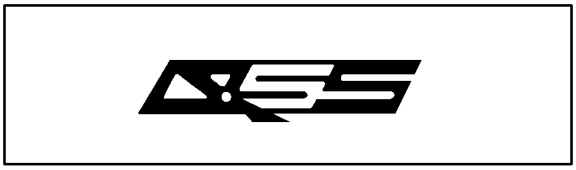

*3 N–1 and N–5 are applied to PASEO convertible from September 1997 to November 1997 production.

*4 N–3 and N–6 are applied to PASEO convertible from December 1997 production.

Parts Information

PART NUMBER PREFIX: 73399–					
SERIES	LENGTH				
	6 INCH	9 INCH	12 INCH	15 INCH	18 INCH
R–1	–12010	–12020	–12030	–12040	–12050
R–2	–12160	–12170	–12180	–12190	–12200
R–3	–50010	–50020	–50030	–50040	–50050
R–4	–16010	–16020	–16030	–16040	–16050
R–5	–16060	–16070	–16080	–16090	–16100
N–1	–12060	–12070	–12080	–12090	–12100
N–3	–20011	–20021	–20031	–20041	–20051
N–4	–20060	–20070	–20080	–20090	–20100
N–5	–20110	–20120	–20130	–20140	–20150
N–6	–20160	–20170	–20180	–20190	–20200
K–1	–12110	–12120	–12130	–12140	–12150
K–2	–22010	–22020	–22030	–22040	–22050
K–3	–22060	–22070	–22080	–22090	–22100
K–4	–33010	–33020	–33030	–33040	–33050
K–5	–35010	–35020	–35030	–35040	–35050
A–1	–02010	–02020	–02030	–02040	–020050
A–2	–01060*1	–01070	–01080	–01090	–01100
Q–1	–02060	–02070	–02080	–02090	–02100
Q–2	–06010	–06020	–06030	–06040	–06050
Q–3	–06060	–06070	–06080	–06090	–06100
Q–4	–0W010	–0W020	–0W030	–0W040	–0W050
S–1	–04010	–04020	–04030	–04040	–04050
T–1	–01110	–01120	–01130	–01140	–01150

*1 Length: 7 $^{1}/_{4}$"

Owner Instructions

Failure to follow the recommendations indicated below could result in less effectiveness of the seat belt restraint system in case of vehicle collision, causing personal injury.

The Seat Belt Extender must not be used:

A. By anyone other than for whom it was provided (name recorded on seat belt extender).

B. In any vehicle and/or seat position other than the one for which it was provided.

C. When the Seat Belt Extender is provided for rear seat positions (with automatic locking retractor), make sure the retractor is locked when in use.

If your seat belt cannot be fastened securely because it is not long enough, a personalized seat belt extender is available from your Toyota dealer free of charge.

Please contact your local Toyota dealer so that the dealer can order the proper required length for the extender. Bring the heaviest coat you expect to wear for proper measurement and selection of length. Additional ordering information is available at your Toyota dealer.

CAUTION:

When using the seat belt extender, observe the following. Failure to follow these instructions could result in less effectiveness of the seat belt restraint system in case of vehicle accident, increasing the chance of personal injury.

- **Never use the Seat Belt Extender if you can COMFORTABLY fasten the seat belt without it.**
- **The Seat Belt Extender must never be used with any child safety seats.**
- **Remember that the extender provided for you may not be safe when used on a different vehicle, or for another person or at a different seating position than the one originally intended for.**

To connect the extender to the seat belt, insert the tab into the seat belt buckle so that the “PRESS” signs on the buckle–release buttons of the extender and the seat belt are both facing outward as shown.

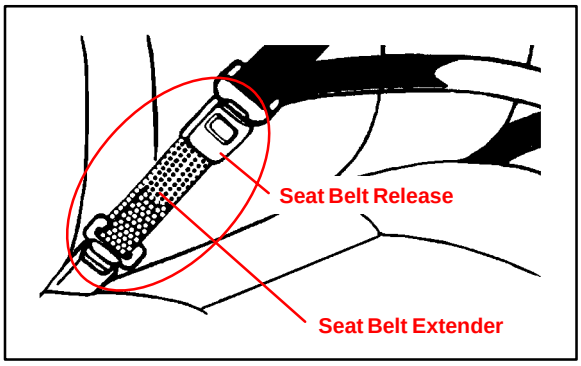

You will hear a click when the tab locks into the buckle.

When releasing the seat belt, press on the buckle–release button on the extender, not on the seat belt. This helps prevent damage to the vehicle interior and extender itself.

When not in use, remove the extender and store in the vehicle for future use.

SEAT BELT EXTENDER WORKSHEET

PLEASE COPY THIS ORIGINAL WORKSHEET FOR EACH EXTENDER NEEDED

CAUTIONS:

- **To minimize the chance and/or severity of injury in an accident, the seat belt extender must only be used:**
  1 By the person for whom it was provided
  2 In the seat position for which it was provided
- **The seat belt extender must never be used with any child safety seats.**
- **When the seat belt extender is provided for rear seat positions (with automatic locking retractor), make sure the retractor is locked when extender belt is in use.**

DEALER		SEAT BELT EXTENDER APPLICATION		APPLICANT		
DEALER CODE	DEALER NAME			APPLICANT NAME		
ADDRESS				ADDRESS		
CITY & STATE		ZIP		CITY & STATE	ZIP	PHONE
EMPLOYEE NAME	MODEL YEAR	BODY TYPE		SEATING POSITION	VEHICLE IDENTIFICATION NUMBER	

DIRECTIONS FOR DETERMINING PROPER EXTENDER LENGTH

1. **Place the seat in the position the applicant normally uses**
2. **With applicant in the seat, wearing thickest coat expected to be worn, pull belt all the way out and try to buckle belt**
   - **If the belt latches into buckle and feels comfortable against upper chest area, an extender is not needed.**
   - **If belt does not buckle continue with step 3**
   - **If buckle latches but belt has no slack remaining, continue with step 3**
3. **Measure distance between applicant's navel and seat belt buckle (dimension A) and enter on worksheet**
4. **With belt all the way out, measure distance between latch tip and buckle tip (dimension B) and enter on worksheet**
   NOTE: If belt latches but there is no slack enter zero as dimension B
5. **Subtract dimension B from dimension A and record number in check number box on worksheet**
6. **Seat belt extender length is dimension B rounded up to next extender length (without exceeding check number)**
   NOTE: If extender length exceeds check number, an extender can not be provided to the customer

Dimension A:
NAVEL TO BUCKLE

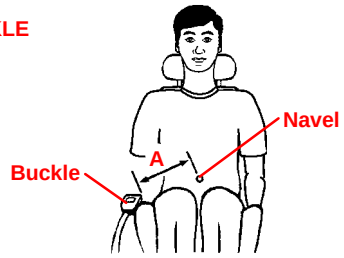

Dimension B:
LATCH TO BUCKLE

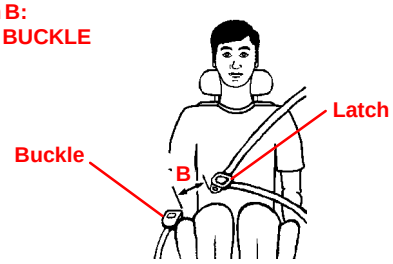

SEAT BELT EXTENDER CALCULATION		
DIMENSION A:	DIMENSION B:	CHECK NUMBER:

SEAT BELT EXTENDER AUTHORIZATION

- **The same seat belt extender can be used for right and left seating applications. Each seat belt extender will have a label identifying the owner, VIN and seating position. Seat belt extenders are available only in black.**
- **Applicant's Signature:** _____ **Date:** _____
  (Actual user of seat belt extender)

TOYOTA

Technical Service BULLETIN

May 24, 2002

Title:

CHILD RESTRAINT SEAT TOP STRAP BRACKET INSTALLATION

Models:

'83 – '00 All Models

Introduction

Child restraint seat top strap bracket installation procedures are provided to supplement the Owner's Manual. Beginning with 2001 models, the top strap brackets are factory installed.

NOTE:

- **The child restraint seat top strap assembly is not available as a service part. Contact the child restraint seat manufacturer for recommended top strap information, top strap to child restraint seat installation instructions, and top strap retailers.**
- **The top strap brackets can only be installed on vehicles that have nuts welded in place by the factory. The locations of these nuts can be found in the Owner's Manual (for most 1983 and newer models.) Toyota does not recommend modifying vehicles that do not have nuts welded in place by the factory. Some Land Cruiser and RAV4 vehicles, prior to 2001 model year, may not have these nuts welded in by the factory.**

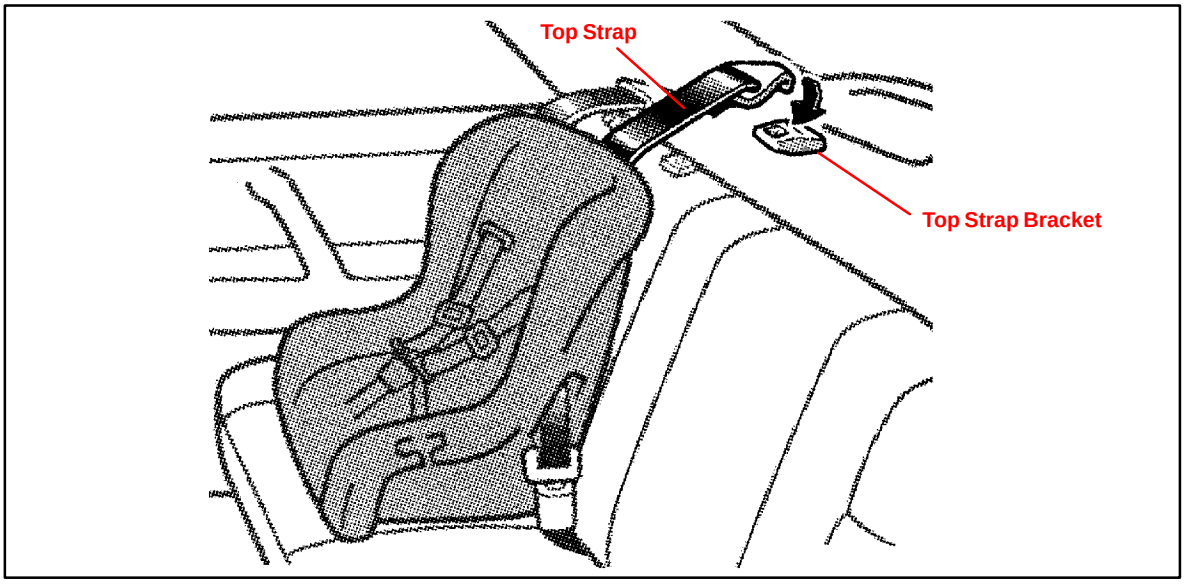

Applicable Vehicles

- **1983 – 2000** model year vehicles, **all models.**

Parts Information

PART NUMBER	PART NAME
73709–12010	Bracket Sub–Assembly (Bracket, Bolt, 10 mm Spacer, and Washers)
04731–22012	CRS Kit (two Bolts [15 mm, 30 mm], three Spacers [5 mm, 10 mm, 15 mm], and Locking Clip)

Warranty Information

OP CODE	DESCRIPTION	TIME	OPN	T1	T2
N/A	Not Applicable to Warranty	–	–	–	–

Installation Procedure

Child Restraint Seat Top Strap Bracket Installation

Obtain the exact year and vehicle model Toyota Owner's Manual before beginning installation.

1. Confirm with the customer which seat location(s) they will be installing the child restraint seat. The Owner's Manual seat section provides an illustration showing available top strap bracket location(s). The illustration page in the Owner's Manual is provided in pages 4–9 of this bulletin.

NOTE:

Determine which kit parts are needed for each specific child seat location, by referring to pages 4–9 of this bulletin.

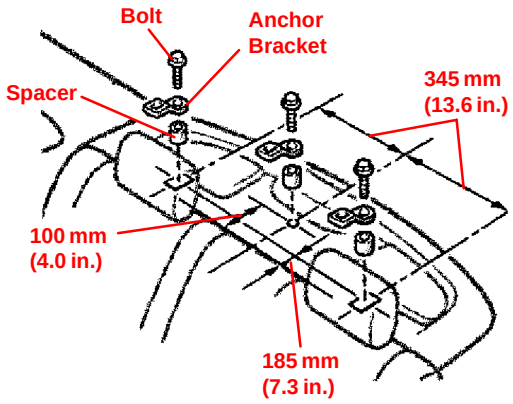

Example of 1999 Camry Showing Three (3) Available Bracket Locations

2. Remove a 20 mm diameter area of the carpet or trim material above the bracket mounting location. In some vehicles, a 20 mm circle is already pre–cut into the interior trim material. Once the interior trim material is removed, the nuts welded in by the factory should be visible.

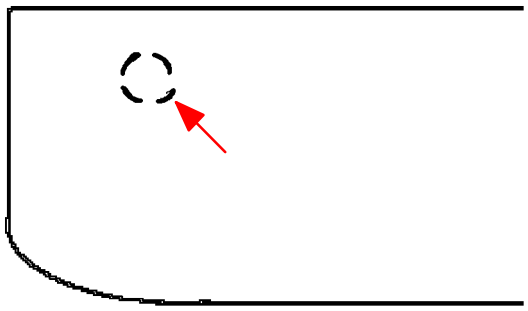

Example of Pre–Cut Circle in Package Tray Finisher

3. If a 5 mm or 15 mm spacer is specified, remove the red lock washer from the Bracket Sub–Assembly (P/N 73709–12010) and remove the 10 mm spacer. Assure the red lock washer is re–installed onto the bolt. If a 5 mm spacer is needed, use the 15 mm bolt from the CRS Kit (P/N 04731–22012).

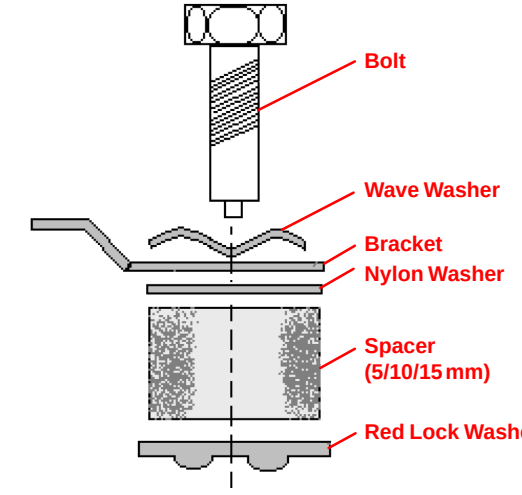

Installation Procedure (Continued)

4. Install the bracket assembly, according to the directions in the Owner's Manual. Tighten the bolt to 16.5 – 24.7 N–m, (1.68 – 2.52 kgf–m, 12.2 – 18.2 ft–lbf).
   - Assure the top strap is attached to the child seat, according to the child seat manufacturer's instructions.
   - Assure the child seat is installed in the vehicle according to the Toyota Owner's Manual (seat section).

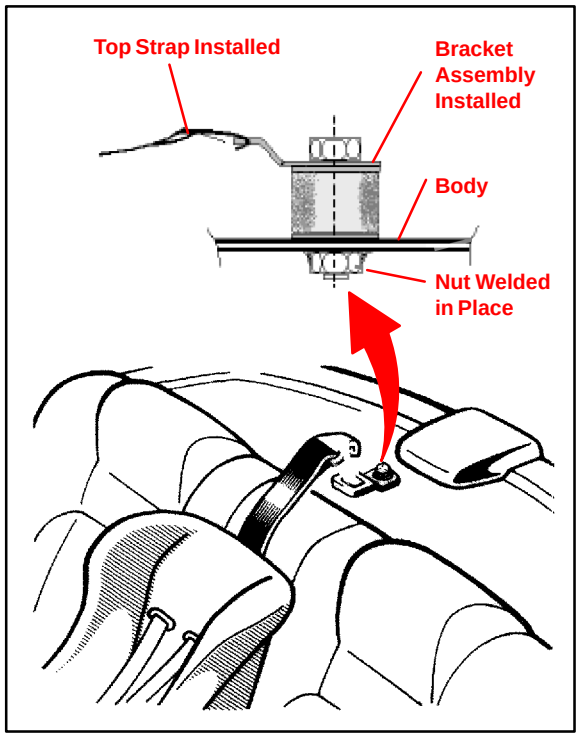

Installation Reference Information

Owner's Manual Installation Reference Information

The following pages of this bulletin contain a reference information chart. This chart contains:

- Owner's Manual page(s) that provide the illustration showing available top strap bracket location(s). The information goes back to 1983 model year. 2001 models and newer already had the bracket installed by the factory.
- Installation notes, such as bracket spacer sizes for each specific child seat location.

EXAMPLE:

OWNER'S MANUAL	4Runner
2000	pg 73 a

This cell contains information on the 2000 4Runner

Refer to this page in the Owner's Manual to find the illustration showing available top strap bracket locations.

Installation Note. In this case, all bracket positions on the 2000 4Runner will require a 15 mm spacer.

INSTALLATION NOTE	COMMENT
a	Spacer – 15 mm for all anchors
b	Spacer – 10 mm for outer, 15 mm for center
c	Spacer – 15 mm for outer, 10 mm for center
d	Spacer – 5 mm for all anchors
e	Spacer – 15 mm for outer, none for center
f	Spacer – 15 mm for center, none for outer
g	No Spacer
h	Spacer – 10 mm for all anchors
i	Bolt for All–Trac/4WD only (Part No. 91511–60814) (Celica & Previa)
NP	Spacer pictured but no specifications
N/A	Top strap anchor bracket mounting not available
Standard	No installation necessary, anchor already installed by factory

Installation Reference Information (Continued)

OWNER'S MANUAL	4Runner	Avalon	Camry Sedan	Camry Liftback	Camry Solara	Camry Wagon	Celica All Trac 4WD	Celica Coupe
2000	pg 73 a	Standard	Standard		Standard			
1999	pg 71 a	pg 72 a	pg 71–73 a		pg 68 a			pg 49 a
1998	pg 53 a	pg 70 a	pg 68–69 a					pg 48 a
1997	pg 52 a	pg 52 a	pg 56–57 a					pg 45 a
1996	pg 45 NP	pg 40 a	pg 47 a			pg 48 a		pg 37 a
1995	pg 31 g	pg 39 a	pg 44–45 a			pg 45 a		pg 36 a
1994	pg 29 g		pg 41–42 a			pg 42 a		pg 31 a
1993	pg 26 g		pg 33 a			pg 33–34 a	pg 30 i, g	pg 29 a
1992	pg 26 g		pg 27 a				pg 30 i, g	pg 29 a
1991	pg 27 g		pg 29 c			pg 29 g	pg 29–30 i, g	pg 29 a
1990	pg 27 g		pg 29 c			pg 29 g	pg 29–30 i, g	pg 29 a
1989	pg 31–33 g		pg 32 c			pg 33 g	pg 29–30 i, g	pg 31 a
1988	pg 19–20 g		pg 32 b			pg 32 g	pg 16 i, g	pg 16 a
1987	pg 18 g		pg 15 b			pg 16 g		pg 13 a
1986	pg 17 g		pg 13 e	pg 14 f				pg 12 a
1985	pg 16 g		pg 13 e	pg 13 f				pg 12 a
1984	pg 15–16 g		pg 13 e	pg 13 f				pg 12 a
1983			pg 12–13 e	pg 13 f				pg 11–12 a

Installation Reference Information (Continued)

OWNER'S MANUAL	Celica Liftback	Corolla FWD Sedan	Corolla FWD Liftback	Corolla 4WD Wagon	Corolla Coupe	Corolla FX/FX16	Corolla Hardtop	Corolla RWD 2–Door Coupe
2000	Standard	Standard						
1999	pg 49 a	pg 67 a						
1998	pg 49–50 a	pg 65 a						
1997	pg 46–47 a	pg 61 h						
1996	pg 37–38 a	pg 49 h						
1995	pg 37–38 a	pg 43 h						
1994	pg 32 a	pg 39 h						
1993	pg 30 g	pg 32–33 h						
1992	pg 30 g	pg 34 h		pg 34 g				
1991	pg 29–30 g	pg 44 h		pg 45 g	pg 45 a			
1990	pg 29–30 g	pg 44–45 h		pg 46 g	pg 45 a			
1989	pg 31 g	pg 40 h		pg 41–42 g	pg 41 a			
1988	pg 16 g	pg 21–22 h			pg 22 a	pg 26 f		
1987	pg 13 g	pg 13–14 a	pg 14 f					pg 12 h
1986	pg 13 g	pg 12 a	pg 12 f					pg 12 h
1985	pg 13 g	pg 13 a	pg 14 f					pg 12 h
1984	pg 12 g	pg 12–13 a	pg 13 f					pg 12 h
1983	pg 12 g	pg 10 a	pg 11 g		pg 11 g		pg 10 h	

Installation Reference Information (Continued)

OWNER'S MANUAL	Corolla RWD 3–Door Coupe	Corolla Wagon	Cressida	Cressida Wagon	Echo	Land Cruiser	MR2	Paseo Coupe & Convert.
2000					Standard	N/A		
1999						N/A		pg 63 a
1998						N/A		pg 61 a
1997						N/A		pg 55 a
1996		pg 49–50 h				N/A		pg 40 h
1995		pg 44 h				N/A	pg 38 a	pg 37 h
1994		pg 40 h				N/A	pg 33 a	pg 33 h
1993		pg 33 h				N/A	pg 31 a	pg 31 h
1992		pg 35 h	pg 29 c			N/A	pg 31 a	pg 27 h
1991		pg 46 h	pg 29 c			N/A	pg 31 a	
1990		pg 46–47 g	pg 30 c			N/A		
1989		pg 42 a	pg 34 c			N/A	pg 28 a	
1988		pg 23 h	pg 30 h			N/A	pg 12 a	
1987	pg 13 g		pg 21 h	pg 21 g		N/A	pg 11 a	
1986	pg 12 g		pg 16 h	pg 16 g		N/A	pg 11 a	
1985	pg 11 g		pg 15–16 h	pg 16 g		N/A	pg 11 a	
1984	pg 11 g		pg 15 g	pg 15 g		N/A		
1983		pg 11 g	pg 15 g	pg 15 g		N/A		

Installation Reference Information (Continued)

OWNER'S MANUAL	Previa	RAV4	RAV EV	Sienna	Starlet	Supra	T100 Ext. Cab 2WD	T100 Ext. Cab 4WD
2000		N/A	Standard	pg 99 a				
1999		N/A	N/A	pg 96 a				
1998		N/A		pg 74 a		pg 49 d	N/A	N/A
1997	pg 60 a	N/A				pg 49 d	N/A	N/A
1996	pg 47–48 a	N/A				pg 36 d	N/A	N/A
1995	pg 46–47 a					pg 36–37 d	N/A	N/A
1994	pg 41–42 a					pg 32–33 d		
1993	pg 41–42 a					pg 32–33 d		
1992	pg 37–38 i					pg 32 h		
1991	pg 33–34 i					pg 33 h		
1990						pg 31 h		
1989						pg 31 h		
1988						pg 32 h		
1987						pg 15 h		
1986						pg 13–14 g		
1985						pg 13 g		
1984					pg 9 g	pg 12 g		
1983					pg 9 g	pg 11 g		

Installation Reference Information (Continued)

OWNER'S MANUAL	T100 Reg Cab 4WD	T100 Reg Cab 2WD	Tacoma	Tercel 2 Door	Tercel 4WD Wagon	Tercel 3/5	Tercel 4WD	Tercel All Models
2000			N/A					
1999			N/A					
1998	N/A	N/A	N/A					
1997	N/A	N/A	N/A					
1996	N/A	N/A	N/A					
1995	N/A	N/A	N/A					
1994	N/A	N/A						
1993	N/A	N/A						
1992								
1991								
1990				pg 31 a		pg 31 h		
1989				pg 30–31 a		pg 30 h		
1988				pg 18 a, d		pg 17 h		
1987					pg 12 g		pg 12 g	
1986					pg 12 g		pg 12 g	
1985								pg 11–13 g
1984								pg 11 g
1983								pg 11 g

Installation Reference Information (Continued)

OWNER'S MANUAL	Tercel Sedan/ Coupe	Tercel Wagon	Truck 2x4	Truck 4x4	Tundra	Van
2000					Standard	
1999	pg 60 h					
1998	pg 59 h					
1997	pg 54 h					
1996	pg 41 h					
1995	pg 38 h					
1994	pg 39 h		pg 32 g	pg 32 g		
1993	pg 35 h		pg 27 g	pg 27 g		
1992	pg 29 h		pg 27 g	pg 27 g		
1991	pg 28 h		pg 26 g	pg 26 g		
1990			pg 26 g	pg 26 g		
1989			pg 29 g	pg 29 g		pg 37 a
1988			pg 13 g	pg 19 g		pg 23 a
1987	pg 12 g	pg 11 g	pg 14 g	pg 18 g		pg 21 a
1986	pg 12 g	pg 12 g	pg 13 g	pg 17 g		pg 20 a
1985			pg 12 g	pg 15 g		pg 17 a
1984			pg 12 g	pg 12 g		pg 17 a
1983			N/A	N/A		

TOYOTA

Technical Service BULLETIN

March 23, 2001

Title:

NEW SEAT BELT TONGUE PLATE STOPPER SERVICE PARTS

Models:

All Applicable Models

TSB

Introduction

A new service part for the seat belt tongue plate stopper has been introduced. Installation procedures are provided to supplement the Repair Manual.

Applicable Vehicles

MODEL	YEAR
Avalon	1995 – 2001
Camry	1983 – 2001
Corolla	1980 – 2001
Camry Solara	1999 – 2001
Sienna (Front Seat Belt Only)	1998 – 2001
RAV4	1997 – 2001
4Runner	1992 – 2001
Land Cruiser	1991 – 2001
Tundra	2000 – 2001
Tacoma	1997 – 2000
ECHO	2000 – 2001
Celica	1980 – 2001
Prius	2001
Tercel	1981 – 1999

Parts Information

PREVIOUS PART NUMBER	CURRENT PART NUMBER	PART NAME
N/A	73219–02010	Stopper, Tongue Plate (Black)*
N/A	73219–02020	Stopper, Tongue Plate (Gray)*
N/A	73219–02030	Stopper, Tongue Plate (Beige)*

* Use a stopper color that is closest to the seat belt webbing color.

Warranty Information

OP CODE	DESCRIPTION	TIME	OPN	T1	T2
BD0047	Install Seat Belt Tongue Plate Stopper	0.1	73219–020#0	62	12

Applicable Warranty*:

This repair is covered under the Toyota Comprehensive Warranty. This warranty is in effect for 36 months or 36,000 miles, whichever occurs first, from the vehicle's in–service date.

* Warranty application is limited to correction of a problem based upon a customer's specific complaint.

Installation Procedure

1. Preparation

A. Shift the Tongue Plate to the upper portion of the Tongue Plate Stopper, and temporarily hold it with a clip or tape.

B. Remove any pieces of the original Tongue Plate Stopper in the webbing, with a pair of pliers.

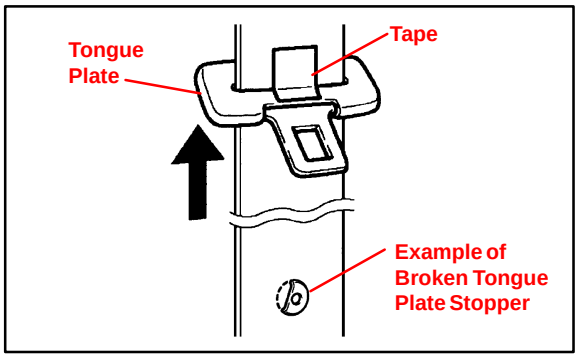

CAUTION:

Damaged or weakened seat belts may break in an accident and injure the occupant. The seat belt assembly must be replaced if:

- **The webbing is cut, frayed, worn, or damaged.**
- **It has been used in a severe impact.**

Inspect the entire length of webbing for damage and replace the assembly if needed. Be careful not to damage the webbing during repair.

2. Install the New Tongue Plate Stopper

A. Install a new Tongue Plate Stopper in the hole of the webbing.

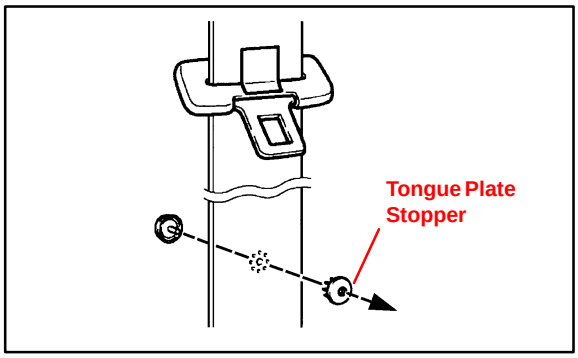

NOTE:

Be aware of the installation direction of the Tongue Plate Stopper as shown in the illustration.

B. Pinch the Tongue Plate Stopper into the webbing using an adjustable wrench, and turn and push the adjustment screw by hand.

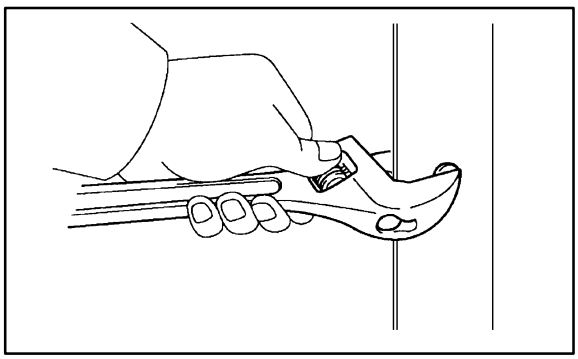

HINT:

Press the adjustment screw in order to position the male and female parts of the Tongue Plate Stopper parallel to each other, as shown in illustration.

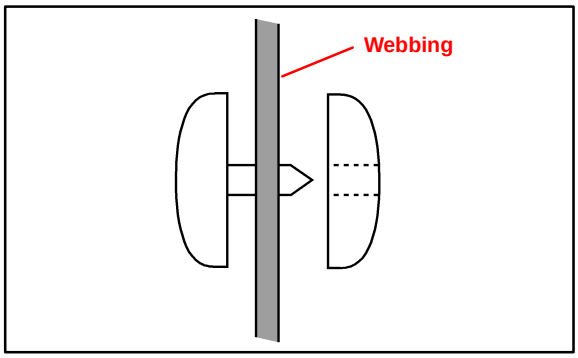

CAUTION:

DO NOT use pliers. They may damage the webbing.

Installation Procedure (Continued)

C. When the adjustment screw for the adjustable wrench can't be turned by hand, tighten the adjustment screw using a pair of adjustable joint pliers until the space between jaws of the adjustable wrench is 4.5 – 5.0 mm. (See illustrations.)

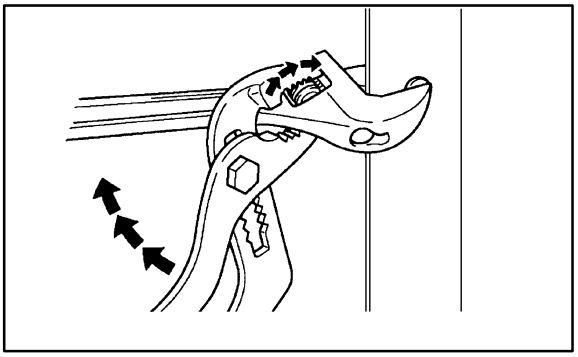

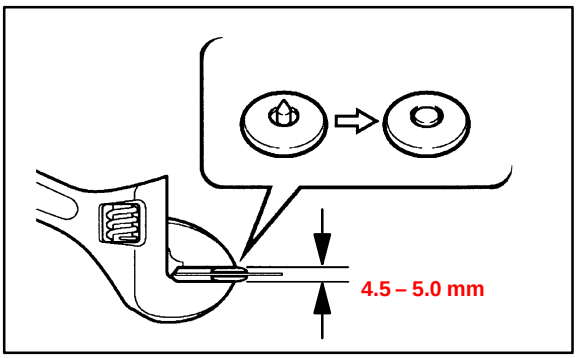

D. Check to be sure that the male pin of the Tongue Plate Stopper has become deformed evenly in the hole of the female part and is firmly held to the belt webbing. (See illustrations.)

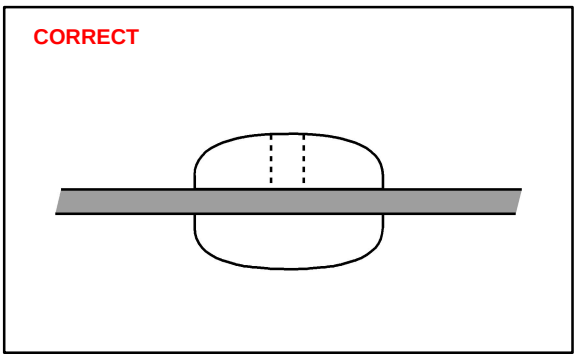

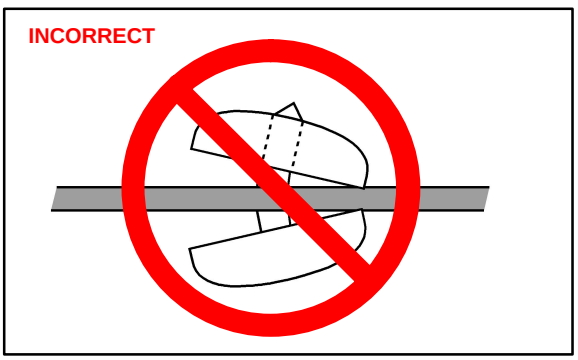

TOYOTA

Technical Service BULLETIN

April 13, 2001

Title:

DOOR MIRROR GLASS SERVICE PARTS

Models:

'97 – '01 4Runner & '00 – '01 Tacoma

BODY

BO013–01

Introduction

Outside rear view mirror glass replacement **sub–assemblies** are available for 4Runner vehicles and Tacoma trucks with electric mirrors. Instructions on how to replace the mirror glass and part numbers are listed below. **As a reminder, it is not necessary to replace the entire mirror assembly, as this service part is available.**

Applicable Vehicles

- **1997 – 2001** model year **4Runner** vehicles.
- **2000 – 2001** model year **Tacoma** vehicles **with electric remote mirrors**.

Production Change Information

MODEL	STARTING VIN
4Runner	JT2GN8#R#10190218 JT2HN8#R#10333769 JT2HN8#R#19049317
Tacoma with Electric Remote Mirrors	##########YZ708890

NOTE:
The part numbers described in this bulletin are for reference only. Always consult the parts microfiche for the correct part number.

Parts Information

MODEL	MODEL YEAR	MIRROR GLASS PART NUMBER
4Runner	2000/2001	87961–35751 (LH) 87931–3D010 (RH) 87961–35821 (LH) Heated 87931–3D020 (RH) Heated
Tacoma	2000/2001	87961–35751 (LH) 87931–35840 (RH)
4 Runner	1999	87947–35230 (LH) 87917–35240 (RH) 87947–35740 (LH) Heated 87917–35830 (RH) Heated
	1997 & 1998	87947–35230 (LH) 87917–35240 (RH)

Warranty Information

MODEL YEAR	OP CODE	DESCRIPTION	TIME	OPN	T1	T2
2000–2001	BD1006	R & R Mirror Glass	0.1	Same as Replacement Part	99	*
1997–1999	BD1007		0.5		99	*

* **Use a T2 that best describes the customer concern. Both a T1 & T2 code must be entered for the claim to be processed.**

Applicable Warranty*:
This repair is covered under the Toyota Comprehensive Warranty. This warranty is in effect for 36 months or 36,000 miles, whichever occurs first, from the vehicle's in–service date.

* Warranty application is limited to correction of a problem based upon a customer's specific complaint.

Replacement Procedure
'00–'01 MY 4Runner & Tacoma

1. Adjust mirror so that the lower edge of the glass is sticking out away from the assembly's edge.
2. Place a broad flat blade screwdriver into the recessed area of the glass housing at the bottom edge of the glass and pry the glass from the assembly.
3. On vehicles with heated mirrors, disconnect the heater element connector.
4. Remove the glass from the assembly.
5. To install new glass, reattach the heater element connector (if necessary) and snap the new mirror into place.
6. Snap the mirror in place using your thumb and index finger snapping the glass to the white frame behind it.

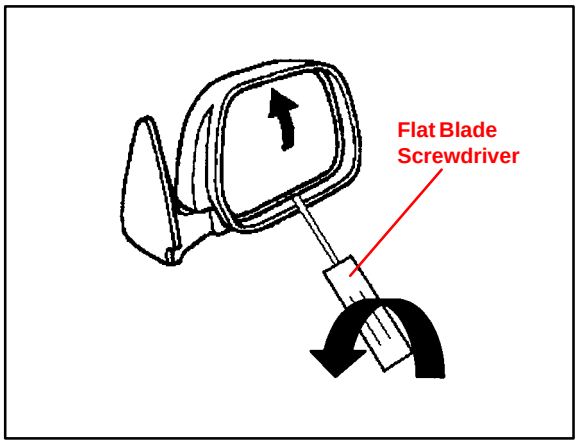

Replacement Procedure
'97–'99 MY 4Runner

CAUTION:
Wear leather gloves and safety glasses.

1. Remove mirror glass.
   A. Using a scraper, take out the original mirror glass.
   B. Clear away fragments of mirror glass from the body.
   C. Using adhesive tape, clean off the old double–stick tape from the mirror holder.

NOTE:
Do not use a solvent to remove the old double–stick tape; this may damage the plastic.

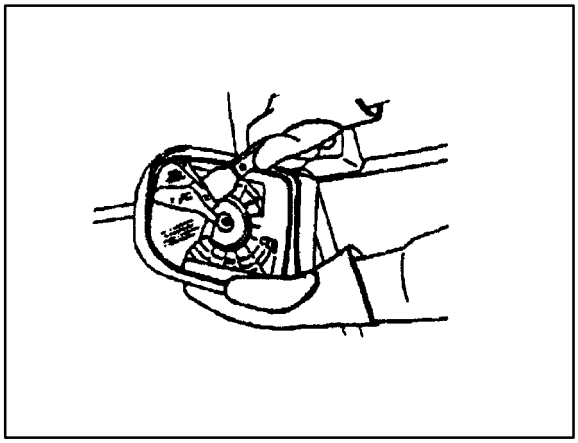

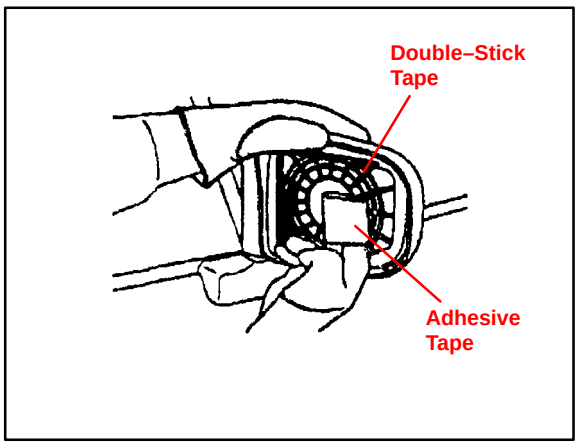

Replacement Procedure
'97–'99 MY 4Runner
(Continued)

2. Remove the mirror holder.

   A. Remove the screw.

   B. Disconnect the claws of the mirror holder as shown, and remove the mirror holder.

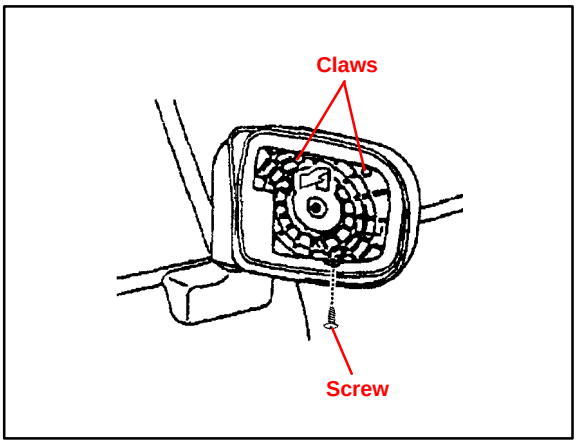

NOTE (With Heated Mirrors):

Use caution when removing the mirror holder since the wire harness is directly behind the mirror.

3. Install new mirror glass into the glass holder.

   A. Remove the backing paper from the rear of the new mirror glass.

   B. Install the narrow side of the mirror glass to the mirror holder.

   C. Using a heat gun, heat the wide side of the mirror holder for approximately 1 minute.

   D. Attach the mirror holder.

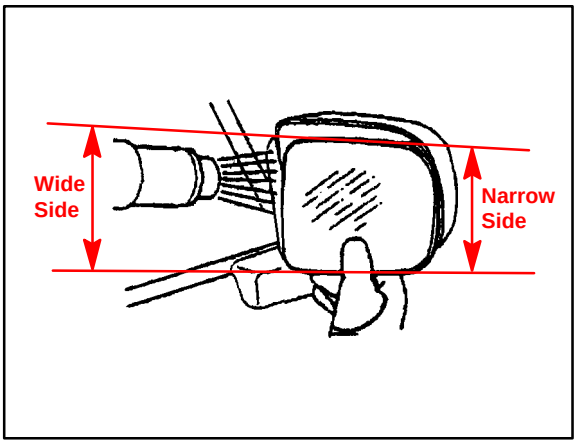

4. Install the mirror holder.

5. Inspect mirror operation.

TOYOTA

Technical Service BULLETIN

August 10, 2001

Title:

SHOULDER BELT ANCHOR TAPE SET

Models:

All Applicable Models

TSB

BODY

BO019-01

Introduction

To assist customers in preventing particle buildup and preserve the appearance of the shoulder belt anchor, the following procedure has been developed.

Applicable Vehicles

- **1996–2001** model year **4Runner**[*1] vehicles.
- **1996–2001** model year **Land Cruiser** vehicles.
- **1996–2001** model year **RAV4**[*2] vehicles.
- **2001** model year **Sequoia** vehicles.
- **1996–1998** model year **T100** trucks.
- **1996–2001** model year **Tacoma**[*1] trucks.
- **2000–2001** model year **Tundra** trucks.

[*1] Except rear seat belt.

[*2] Except rear seat belt of soft top models.

Parts Information

CURRENT PART NUMBER	PART NAME
73205–48011	Tape Set, Shoulder Belt Anchor

NOTE:

The above tape set contains the fluorocarbon resin tape (2 pieces) and Velcro tape (1 piece).

Warranty Information

OP CODE	DESCRIPTION	TIME	OPN	T1	T2
BD1011	Clean the Shoulder Belt Anchor	0.3	73210–#####–##*1 73220–#####–##*1	61	99

*1 OPN should be part number of whichever belt assembly that the procedure is performed on.

Applicable Warranty*:

This repair is covered under the Toyota Comprehensive Warranty. This warranty is in effect for 36 months or 36,000 miles, whichever occurs first, from the vehicle's in-service date.

* Warranty application is limited to correction of a problem based upon a customer's specific complaint.

Installation Procedure

1. CLEAN SHOULDER BELT ANCHOR

NOTE:

- **Do not install the tape when the vehicle temperature is below the freezing point.**
- **Do not re–use removed fluorocarbon resin tape.**

A. Pull out the seat belt about 300 mm and attach a clip as shown in the illustration.

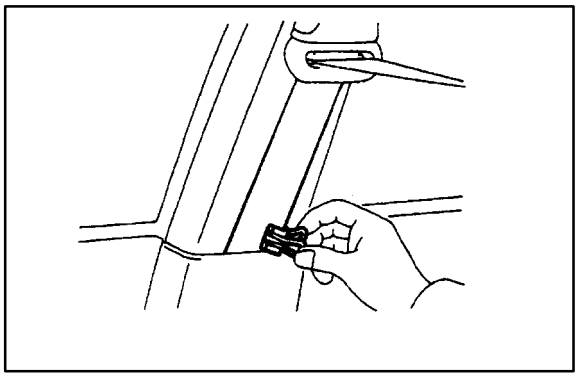

HINT:

Preventing the seat belt from retraction with a clip will make the following work easier.

B. Put the Velcro tape (in the parts kit) through the hole of the shoulder belt anchor, brush–shaped side to the anchor.

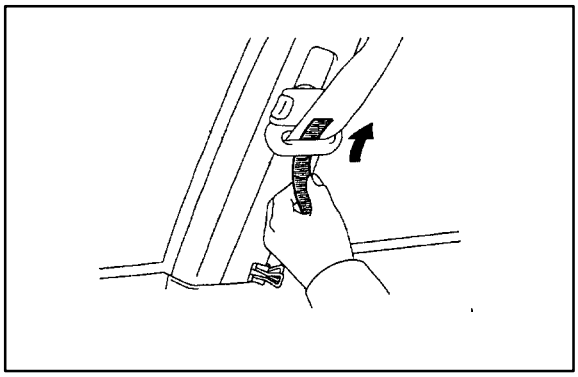

C. Pull both ends of the Velcro tape with your hand and shave off the dirt on the shoulder belt anchor by moving the Velcro tape several times as shown in the illustration.

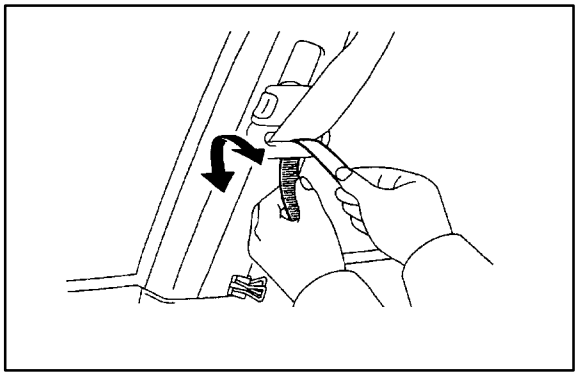

NOTE:

Remove the dirt completely. Otherwise, the fluorocarbon resin tape may not adhere properly.

Installation Procedure (Continued)

2. INSTALL FLUOROCARBON RESIN TAPE

A. Place the fluorocarbon resin tape onto the seat belt as shown in the illustration.

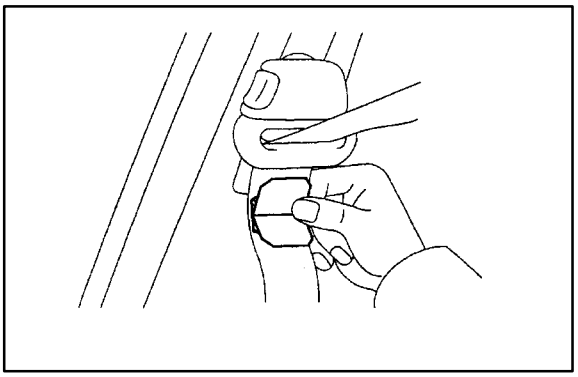

NOTE:

Before installation of the fluorocarbon resin tape, it is necessary to pre–release the colored film about 5 mm for each side. (Not fully released.)

B. By pulling up the seat belt, put the fluorocarbon resin tape through the hole of the shoulder belt anchor. Match the shoulder belt anchor to the center of the tape.

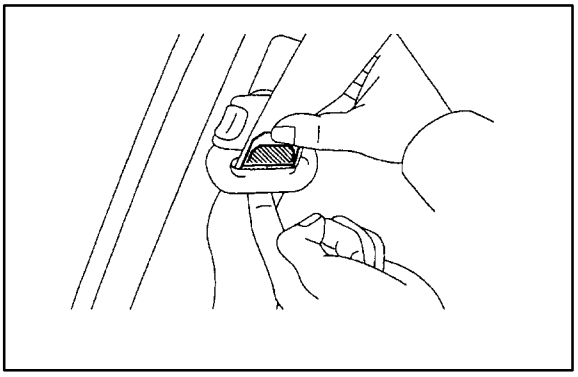

C. Remove the upper side colored film from the fluorocarbon resin tape, and securely affix the tape to the outside of the shoulder belt anchor.

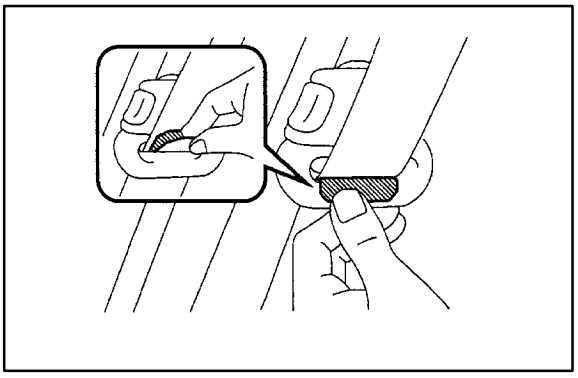

D. Remove the lower side colored film from the fluorocarbon resin tape, and securely affix the tape to the outside of the shoulder belt anchor.

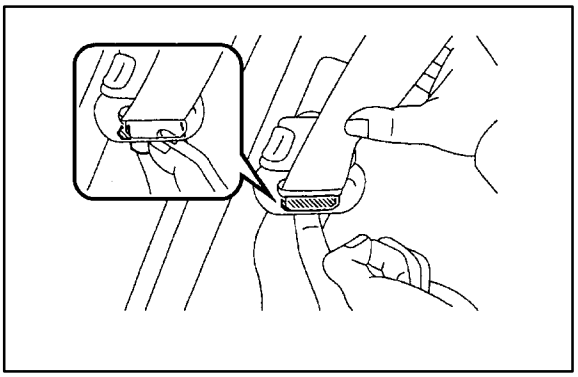

NOTE:

- **Be sure to affix the fluorocarbon tape securely along all edges.**
- **Pay attention not to make any wrinkles or slack in the fluorocarbon resin tape.**

E. Remove the clip.

Installation Procedure (Continued)

F. By pulling the seat belt up and down several times, as shown in the illustration, securely affix the fluorocarbon resin tape and confirm the smoothness of the belt movement.

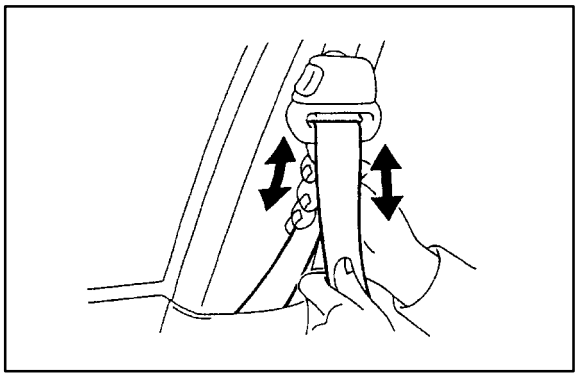

NOTE:

Affix the fluorocarbon resin tape on the shoulder belt anchor to the other side following the same procedure.

NOTE:

If the seat belt requires cleaning to remove dirt, only use a neutral detergent or lukewarm water to clean. Use the seat belt after it is completely dried, to confirm proper operation.

TOYOTA

Technical Service BULLETIN

August 11, 2000

Title:

SEAT BELT EXTENDER

Models:

'99 – '01 Model Year

TSB

Introduction

Toyota customers who find it necessary to increase the length of their seat belts may obtain Seat Belt Extenders at **no cost** through their local Toyota dealer.

- The extender is available in 6 inch, 9 inch, 12 inch, 15 inch and 18 inch lengths.
- The extender is available **only in black**.
- Owners are informed of the seat belt extender availability through the Toyota Owner's Manual included in each vehicle.

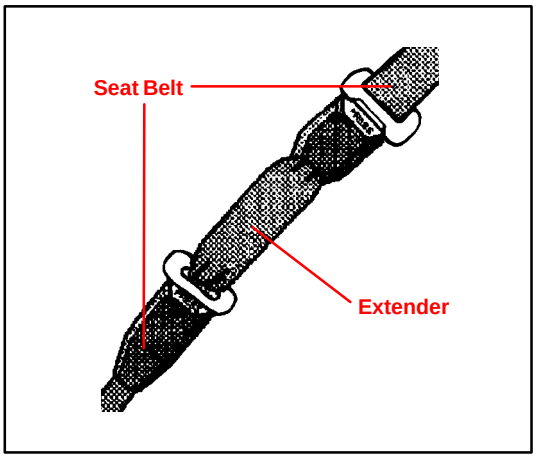

The customer *(individual requiring the extender)* must visit a Toyota dealership to have the required measurements made and to complete the seat belt extender worksheet. The worksheet will allow the proper fitting and selection of a seat belt extender for the customer. The dealership personnel should then determine the applicable part number and place a ***Critical Order*** through the ***TDN Parts Network.***

The dealership service department should complete the affixed Seat Belt Extender Label and review the "owner instruction sheet" with the customer. The dealership should give a copy of the completed worksheet to the customer and keep the original in the customer's file.

To assure utmost owner satisfaction, it is recommended that a dealership designate one person to coordinate all activities related to the seat belt extender issue.

From past sales history, it is recommended that dealerships **do not stock** Seat belt extenders due to low demand and the need for customer fitting.

This bulletin contains the following information:

Procedure and Sample Label.....Page 2
Application Charts .....Page 3–4
Part Number Information.....Page 5
Owner Instructions.....Page 6
Seat Belt Extender Worksheet.....Page 7

Applicable Vehicles

- **1999** through **2001** model year **Toyota** vehicles.

Warranty Information

OP CODE	DESCRIPTION	TIME	OPN	T1	T2
N/A	Not Applicable to Warranty	–	–	–	–

Procedure

1. Owner requests a seat belt extender from dealer.
2. Dealer verifies the need for a seat belt extender and obtains a current copy of this TSB and copies the worksheet.
3. Dealer measures the customer and completes the worksheet. Dealer determines the correct part number and places a Critical Order for the part through the TDN Parts Network.
4. Dealer receives seat belt extender and calls the customer in to check fit of the part.
5. If the seat belt extender fit is good, dealership personnel completes the customer information label on the part, explains usage of the part, and gives the customer a copy of the completed worksheet.
6. Dealer places a copy of the completed worksheet in the customer's records.

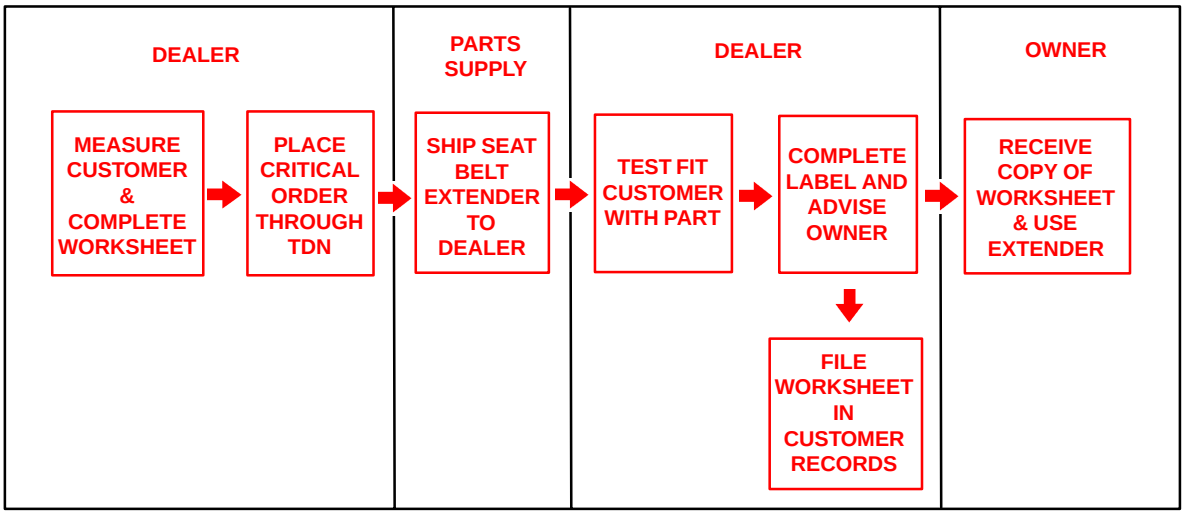

Sample Seat Belt Extender Customer Information Label

CAUTION

THIS SEAT BELT EXTENDER IS TO BE USED ONLY BY: _____

ON VEHICLE: _____

VIN: _____

SEATING POSITION: _____

USE BY OTHERS, OR IN ANOTHER SEATING POSITION, OR IN ANOTHER VEHICLE COULD REDUCE SEAT BELT RESTRAINT IN AN ACCIDENT AND RESULT IN PERSONAL INJURY.

Front Seat Belt Extender Applications

FRONT SEAT – EXTENDER APPLICATION				
MODEL	**TYPE**	**’01**	**’00**	**’99**
RAV4	—	R–5	R–5	R–5
ECHO	—	K–5	5–5	—
COROLLA	TMMC PRODUCTION	Q–4	Q–4	Q–4
	NUMMI PRODUCTION			
PRIUS	—	N–7	—	—
MR2 SPYDER	—	N–6	N–6	—
CELICA	LIFTBACK & COUPE	N–6	N–6	N–6
	CONVERTIBLE	—	—	
CAMRY	TMC PRODUCTION	Q–4	Q–4	Q–4
	TMMK PRODUCTION			
CAMRY SOLARA	COUPE	Q–4	Q–4	Q–4
	COVERTIBLE			—
AVALON *1	—	T–1	T–1	Q–2
SIENNA	—	Q–4	Q–4	Q–4
TACOMA *1	—	S–2	S–1	S–1
4RUNNER	—	K–5	K–5	K–5
LAND CRUISER	—	K–5	K–5	K–5
SEQUIOA	—	Q–4	—	—
TUNDRA *1	—	Q–4	Q–4	—

*1 The extender must not be used for the center seat belt of Avalon, Tacoma and Tundra which have bench seats.

Rear Seat Belt Extender Applications

REAR SEAT – EXTENDER APPLICATION				
MODEL	**TYPE**	**’01**	**’00**	**’99**
RAV4	W/TOKAI RIKA	R–5	R–5*1	R–5*1
	W/QSS	—	Q–4*2	Q–4*2
ECHO	—	R–5	R–5	—
COROLLA	TMMC PRODUCTION	Q–4	Q–4	Q–4
	NUMMI PRODUCTION	T–1	T–1	T–1
PRIUS	—	N–7	—	—
CELICA	LIFTBACK & COUPE	N–6	N–6	N–6
	CONVERTIBLE (RH)	—	—	N–1
	CONVERTIBLE (LH)			N–5
CAMRY	TMC PRODUCTION	Q–4	Q–4	Q–4
	TMMK PRODUCTION			
CAMRY SOLARA	COUPE	Q–4	Q–4	Q–4
	CONVERTIBLE			—
AVALON	—	T–1	T–1	Q–2
SIENNA	—	Q–4	Q–4	Q–4
TACOMA	XTRACAB	A–2	A–2	A–2
4RUNNER	—	R–5	R–5	R–5
LAND CRUISER	—	K–5	K–5	K–5
SEQUOIA	REAR SEAT #1	T–1	—	—
SEQUOIA	REAR SEAT #2	Q–4		
TUNDRA	ACCESS CAB	Q–4	Q–4	—

*1 This seat belt was supplied by TOKAI RIKA. Make sure that the I/D mark on the back side of the seat belt buckle is the same as shown.

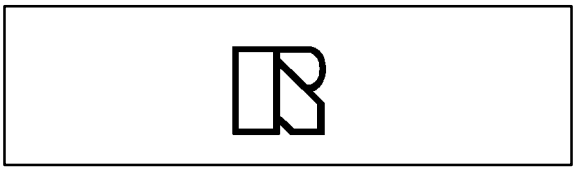

*2 This seat belt was supplied by QSS. Make sure that the I/D mark on the back side of the seat belt buckle is the same as shown.



NOTE:

The seat belt extender must not be used for the center rear seat belt.

Parts Information

PART NUMBER PREFIX: 73399–					
SERIES	LENGTH				
	6 INCH	9 INCH	12 INCH	15 INCH	18 INCH
R–5	–16060	–16070	–16080	–16090	–16100
N–1	–12060	–12070	–12080	–12090	–12100
N–5	–20110	–20120	–20130	–20140	–20150
N–6	–20160	–20170	–20180	–20190	–20200
N–7	–47010	–47020	–47030	–47040	–47050
K–5	–35010	–35020	–35030	–35040	–35050
A–2	–01060*1	–01070	–01080	–01090	–01100
Q–2	–06010	–06020	–06030	–06040	–06050
Q–4	–0W010	–0W020	–0W030	–0W040	–0W050
S–1	–04010	–04020	–04030	–04040	–04050
T–1	–01110	–01120	–01130	–01140	–01150

*1 Length: 7 $^{1}/_{4}$"

Owner Instructions

Failure to follow the recommendations indicated below could result in less effectiveness of the seat belt restraint system in case of vehicle collision, causing personal injury.

The Seat Belt Extender must not be used:

a. By anyone other than for whom it was provided (name recorded on seat belt extender).

b. In any vehicle and/or seat position other than the one for which it was provided.

c. When the Seat Belt Extender is provided for rear seat positions (with automatic locking retractor), make sure the retractor is locked when in use.

If your seat belt cannot be fastened securely because it is not long enough, a personalized seat belt extender is available from your Toyota dealer free of charge.

Please contact your local Toyota dealer so that the dealer can order the proper required length for the extender. Bring the heaviest coat you expect to wear for proper measurement and selection of length. Additional ordering information is available at your Toyota dealer.

CAUTION:

When using the seat belt extender, observe the following. Failure to follow these instructions could result in less effectiveness of the seat belt restraint system in case of vehicle accident, increasing the chance of personal injury.

- **Never use the Seat Belt Extender if you can comfortably fasten the seat belt without it.**
- **The Seat Belt Extender must never be used with any child safety seats.**
- **Remember that the extender provided for you may not be safe when used on a different vehicle, or for another person or at a different seating position than the one originally intended for.**

To connect the extender to the seat belt, insert the tab into the seat belt buckle so that the “PRESS” signs on the buckle–release buttons of the extender and the seat belt are both facing outward as shown.

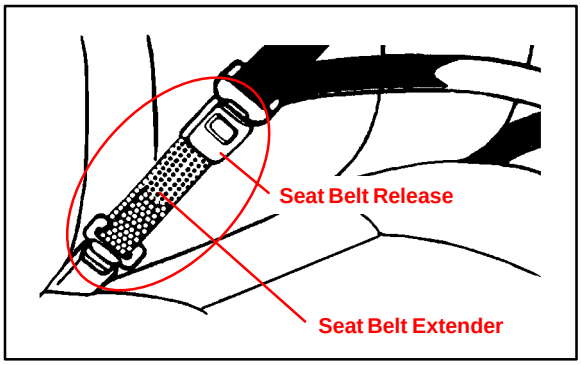

You will hear a click when the tab locks into the buckle.

When releasing the seat belt, press on the buckle–release button on the extender, not on the seat belt. This helps prevent damage to the vehicle interior and extender itself.

When not in use, remove the extender and store in the vehicle for future use.

SEAT BELT EXTENDER WORKSHEET

PLEASE COPY THIS ORIGINAL WORKSHEET FOR EACH EXTENDER NEEDED

CAUTION:

- **To minimize the chance and/or severity of injury in an accident, the seat belt extender must only be used:**
  1. **By the person for whom it was provided**
  2. **In the seat position for which it was provided**
- **The seat belt extender must never be used with any child safety seats.**
- **When the seat belt extender is provided for rear seat positions (with automatic locking retractor), make sure the retractor is locked when extender belt is in use.**

DEALER			SEAT BELT EXTENDER APPLICATION		APPLICANT		
DEALER CODE	DEALER NAME		APPLICANT NAME				
ADDRESS			ADDRESS				
CITY & STATE		ZIP	CITY & STATE		ZIP	PHONE	
EMPLOYEE NAME	MODEL YEAR	BODY TYPE	SEATING POSITION	VEHICLE IDENTIFICATION NUMBER			

DIRECTIONS FOR DETERMINING PROPER EXTENDER LENGTH

1. **Place the seat in the position the applicant normally uses**
2. **With applicant in the seat, wearing thickest coat expected to be worn, pull belt all the way out and try to buckle belt**
   - **If the belt latches into buckle and feels comfortable against upper chest area, an extender is not needed.**
   - **If belt does not buckle continue with step 3**
   - **If buckle latches but belt has no slack remaining, continue with step 3**
3. **Measure distance between applicant's navel and seat belt buckle (dimension A) and enter on worksheet**
4. **With belt all the way out, measure distance between latch tip and buckle tip (dimension B) and enter on worksheet**
   NOTE: If belt latches but there is no slack enter zero as dimension B
5. **Subtract dimension B from dimension A and record number in check number box on worksheet**
6. **Seat belt extender length is dimension B rounded up to next extender length (without exceeding check number)**
   NOTE: If extender length exceeds check number, an extender can not be provided to the customer

Dimension A:
NAVEL TO BUCKLE

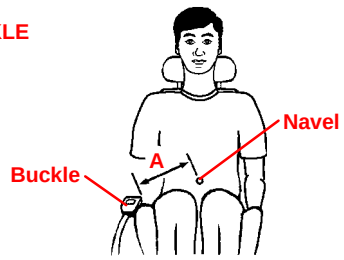

Dimension B:
LATCH TO BUCKLE

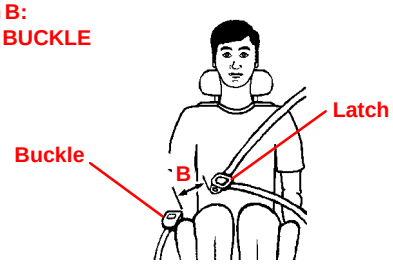

SEAT BELT EXTENDER CALCULATION		
DIMENSION A:	DIMENSION B:	CHECK NUMBER:

SEAT BELT EXTENDER AUTHORIZATION

- **The same seat belt extender can be used for right and left seating applications. Each seat belt extender will have a label identifying the owner, VIN and seating position. Seat belt extenders are available only in black.**
- **Applicant's Signature:** _____ **Date:** _____
  (Actual user of seat belt extender)

TOYOTA

Technical Service BULLETIN

September 14, 2001

Title:

SEAT BELT EXTENDER

Models:

'00 – '02 Model Year

TSB

BODY

BO023-01

Introduction

Toyota customers who find it necessary to increase the length of their seat belts may obtain Seat Belt Extenders at **no cost** through their local Toyota dealer.

- The extender is available in 6 inch, 9 inch, 12 inch, 15 inch and 18 inch lengths.
- The extender is available **only in black.**
- Owners are informed of the Seat Belt Extender availability through the Toyota Owner's Manual included in each vehicle.

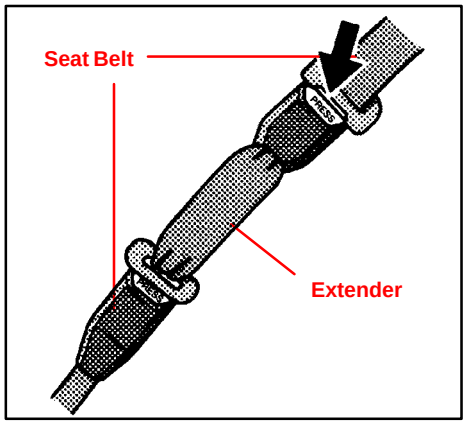

The customer (individual requiring the extender) must visit a Toyota dealership to have the required measurements made and to complete the Seat Belt Extender Worksheet. The worksheet will allow the proper fitting and selection of a Seat Belt Extender for the customer. The dealership personnel should then determine the applicable part number and place a ***Critical Order*** through the ***TDN Parts Network or Dealer Daily.***

The dealership service department should complete the affixed Seat Belt Extender Customer Information Label on the part and review the "Owner Instruction Sheet" with the customer. The dealership should give a copy of the completed worksheet to the customer and keep the original in the customer's file.

To assure utmost owner satisfaction, it is recommended that a dealership designate one person to coordinate all activities related to the Seat Belt Extender issue.

It is recommended that dealerships **do NOT stock** Seat Belt Extenders due to the need for proper fitting to individual customers.

This bulletin contains the following information:

Procedure and Sample Label . . . . . **Page 2**
Application Charts . . . . . **Pages 3–4**
Part Number Information . . . . . **Page 5**
Owner Instructions . . . . . **Page 6**
Seat Belt Extender Worksheet . . . . . **Page 7**

Applicable Vehicles

- **2000** through **2002** model year **Toyota** vehicles.

Warranty Information

OP CODE	DESCRIPTION	TIME	OPN	T1	T2
N/A	Not Applicable to Warranty	–	–	–	–

Procedure

1. Owner requests a Seat Belt Extender from dealer.
2. Dealer verifies the need for a Seat Belt Extender and obtains a current copy of this TSB and copies the Worksheet.
3. Dealer measures the customer and completes the Worksheet. Dealer determines the correct part number and places a Critical Order for the part through the TDN Parts Network or Dealer Daily.
4. Dealer receives Seat Belt Extender and calls the customer in to check fit of the part.
5. If the Seat Belt Extender fit is good, dealership personnel completes the Customer Information Label on the part, explains usage of the part, and gives the customer a copy of the completed Worksheet.
6. Dealer places copy of the completed Worksheet in the customer's records.

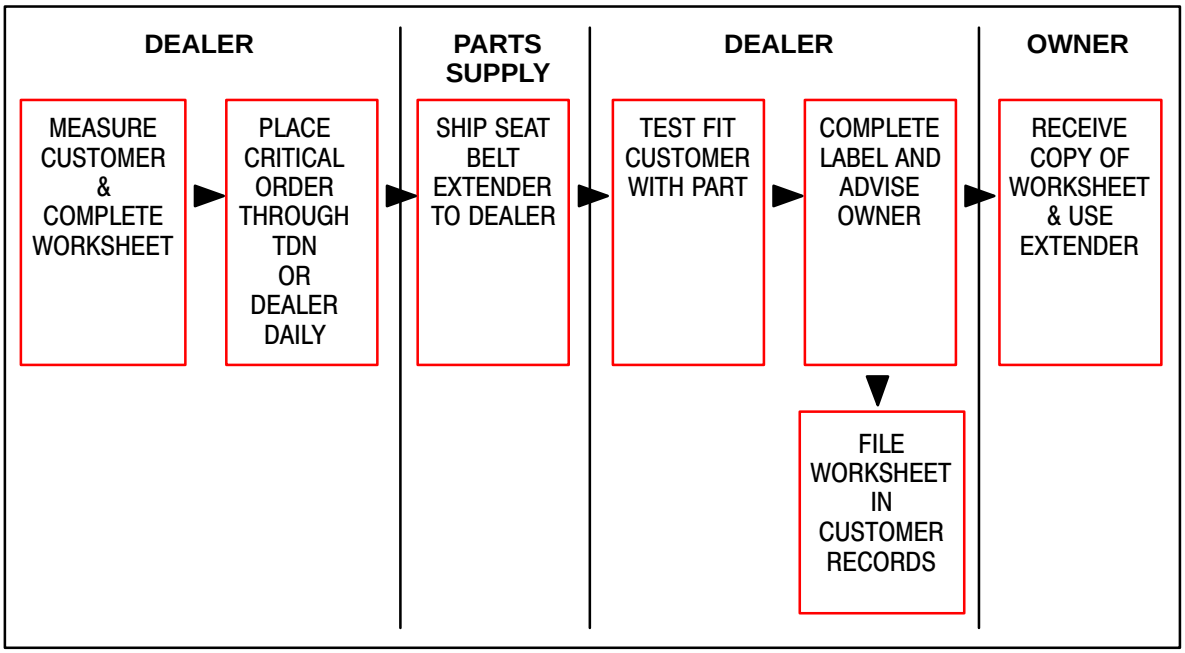

Sample Seat Belt Extender Customer Information Label

CAUTION

THIS SEAT BELT EXTENDER IS TO BE USED ONLY BY: _____

ON VEHICLE: _____

VIN: _____

SEATING POSITION: _____

USE BY OTHERS, OR IN ANOTHER SEATING POSITION, OR IN ANOTHER VEHICLE COULD REDUCE SEAT BELT RESTRAINT IN AN ACCIDENT AND RESULT IN PERSONAL INJURY.

Front Seat Belt Extender Applications

FRONT SEAT – EXTENDER APPLICATION				
MODEL	**TYPE**	**'02**	**'01**	**'00**
RAV4	All Models	R–5	R–5	R–5
RAV4 EV		R–5	R–5	R–5
ECHO		K–5	K–5	K–5
COROLLA	TMMC PRODUCTION	Q–4	Q–4	Q–4
	NUMMI PRODUCTION			
PRIUS	All Models	N–7	N–7	–
MR2 SPYDER		N–7	N–6	N–6
CELICA	LIFTBACK & COUPE	N–7	N–6	N–6
CAMRY	TMC PRODUCTION	Q–4	Q–4	Q–4
	TMMK PRODUCTION			
CAMRY SOLARA	COUPE	Q–4	Q–4	Q–4
	CONVERTIBLE			
AVALON*	All Models	T–1	T–1	T–1
SIENNA		Q–4	Q–4	Q–4
TACOMA*		S–2	S–2	S–1
4RUNNER		K–5	K–5	K–5
LAND CRUISER		K–5	K–5	K–5
SEQUOIA		Q–4	Q–4	–
TUNDRA*		Q–4	Q–4	Q–4
HIGHLANDER		R–5	R–5	–

* The extender must not be used for the center seat of Avalon, Tacoma, and Tundra which have bench seats.

Rear Seat Belt Extender Applications

REAR SEAT – EXTENDER APPLICATION				
MODEL	**TYPE**	**'02**	**'01**	**'00**
RAV4	W/TOKAI RIKA	R–5	R–5	R–5*1
	W/QSS	–	–	Q–4*2
RAV4 EV	All Models	Q–4	Q–4	Q–4
ECHO		R–5	R–5	R–5
COROLLA	TMMC PRODUCTION	Q–4	Q–4	Q–4
	NUMMI PRODUCTION	T–1	T–1	T–1
PRIUS	All Models	N–7	N–7	–
CELICA	LIFTBACK & COUPE	N–7	N–6	N–6
CAMRY	TMC PRODUCTION	Q–4	Q–4	Q–4
	TMMK PRODUCTION			
CAMRY SOLARA	COUPE	Q–4	Q–4	Q–4
	CONVERTIBLE			
AVALON	All Models	T–1	T–1	T–1
SIENNA		Q–4	Q–4	Q–4
TACOMA	XTRACAB	T–1	T–1	A–2
	DOUBLE CAB	S–2	S–2	–
4RUNNER	All Models	R–5	R–5	R–5
LAND CRUISER		K–5	K–5	K–5
SEQUOIA	REAR SEAT #1	T–1	T–1	–
	REAR SEAT #2	Q–4	Q–4	
TUNDRA	ACCESS CAB	Q–4	Q–4	Q–4
HIGHLANDER	All Models	R–5	R–5	–

*1 This seat belt was supplied by TOKAI RIKA. Make sure that the I/D mark on the back side of the seat belt buckle is the same as shown.

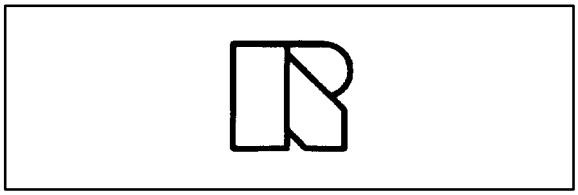

*2 This seat belt was supplied by QSS. Make sure that the I/D mark on the back side of the seat belt buckle is the same as shown.



NOTE:

The seat belt extender must not be used for the center rear seat belt.

Part Number Information

PART NUMBER PREFIX: 73399–					
SERIES	**LENGTH**				
	6 INCH	**9 INCH**	**12 INCH**	**15 INCH**	**18 INCH**
R–5	–16060	–16070	–16080	–16090	–16100
N–1	–12060	–12070	–12080	–12090	–12100
N–5	–20110	–20120	–20130	–20140	–20150
N–6	–20160	–20170	–20180	–20190	–20200
N–7	–47010	–47020	–47030	–47040	–47050
K–5	–35010	–35020	–35030	–35040	–35050
A–2	–01060*****	–01070	–01080	–01090	–01100
Q–2	–06010	–06020	–06030	–06040	–06050
Q–4	–0W010	–0W020	–0W030	–0W040	–0W050
S–1	–04010	–04020	–04030	–04040	–04050
S–2	–04060	–04070	–04080	–04090	–04100
T–1	–01110	–01120	–01130	–01140	–01150

***** Length: 7-1/4”

Owner Instructions

Failure to follow the recommendations indicated below could result in reduced effectiveness of the seat belt restraint system in case of vehicle collision, causing personal injury.

The Seat Belt Extender must not be used:

a. By anyone other than for whom it was provided (name recorded on seat belt extender).

b. In any vehicle and/or seat position other than the one for which it was provided.

c. When the Seat Belt Extender is provided for rear seat positions (with automatic locking retractor), make sure the retractor is locked when in use.

If your seat belt cannot be fastened securely because it is not long enough, a personalized Seat Belt Extender is available from your Toyota dealer free of charge.

Please contact your local Toyota dealer so that the dealer can order the proper required length for the extender. Bring the heaviest coat you expect to wear for proper measurement and selection of length. Additional ordering information is available at your Toyota dealer.

CAUTION:

When using the Seat Belt Extender, observe the following. Failure to follow these instructions could result in reduced effectiveness of the seat belt restraint system in case of vehicle accident, increasing the chance of personal injury.

- **Never use the Seat Belt Extender if you can COMFORTABLY fasten the seat belt without it.**
- **The Seat Belt Extender must never be used with any child safety seats.**
- **Remember that the extender provided for you may not be safe when used on a different vehicle, or for another person or at a different seating position than the one originally intended for.**

To connect the extender to the seat belt, insert the tab into the seat belt buckle so that the "PRESS" signs on the buckle-release buttons of the extender and the seat belt are both facing outward as shown.

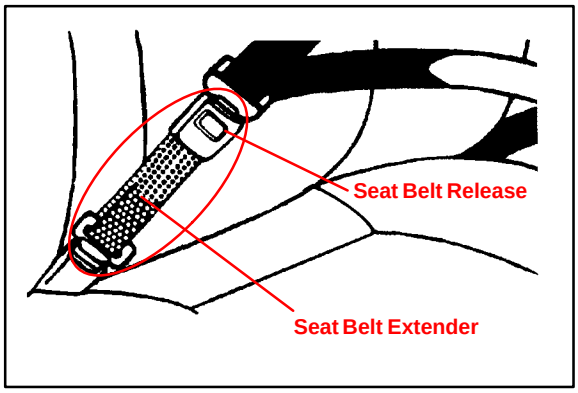

You will hear a click when the tab locks into the buckle.

When releasing the seat belt, press on the buckle-release button on the extender, not on the seat belt. This helps prevent damage to the vehicle interior and extender itself.

When not in use, remove the extender and store in the vehicle for future use.

SEAT BELT EXTENDER WORKSHEET

PLEASE COPY THIS ORIGINAL WORKSHEET FOR EACH EXTENDER NEEDED

CAUTIONS:

- **To minimize the chance and/or severity of injury in an accident, the Seat Belt Extender must only be used:**
  1 By the person for whom it was provided.
  2 In the seat position for which it was provided.
- **The Seat Belt Extender must never be used with any child safety seats.**
- **When the Seat Belt Extender is provided for rear seat positions (with automatic locking retractor), make sure the retractor is locked when extender belt is in use.**

DEALER			SEAT BELT EXTENDER APPLICATION		APPLICANT	
DEALER CODE	DEALER NAME		APPLICANT NAME			
ADDRESS			ADDRESS			
CITY & STATE		ZIP	CITY & STATE		ZIP	PHONE
EMPLOYEE NAME	MODEL YEAR	BODY TYPE	SEATING POSITION	VEHICLE IDENTIFICATION NUMBER		

DIRECTIONS FOR DETERMINING PROPER EXTENDER LENGTH

1. **Place the seat in the position the applicant normally uses.**
2. **With the applicant in the seat, wearing the thickest coat expected to be worn, pull belt all the way out and try to buckle belt.**
   - **If belt latches into buckle and feels comfortable against upper chest area, an extender is not needed.**
   - **If belt does not buckle, continue with Step 3.**
   - **If buckle latches but belt has no slack remaining, continue with Step 3.**
3. **Measure distance between applicant's navel and seat belt buckle (Dimension A) and enter on Worksheet.**
4. **With belt all the way out, measure distance between latch tip and buckle tip (Dimension B) and enter on Worksheet.**
   NOTE: If belt latches but there is no slack enter zero as Dimension B.
5. **Subtract Dimension B from Dimension A and record number in Check Number box on Worksheet.**
6. **Seat Belt Extender length is Dimension B rounded up to next extender length (without exceeding Check Number).**
   NOTE: If extender length exceeds Check Number, an extender <u>cannot</u> be provided to the customer.

Dimension A:
NAVEL TO BUCKLE

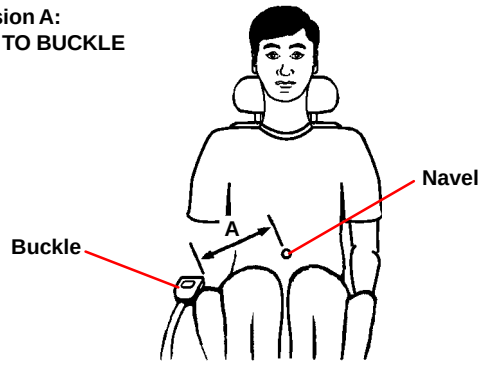

Dimension B:
LATCH TO BUCKLE

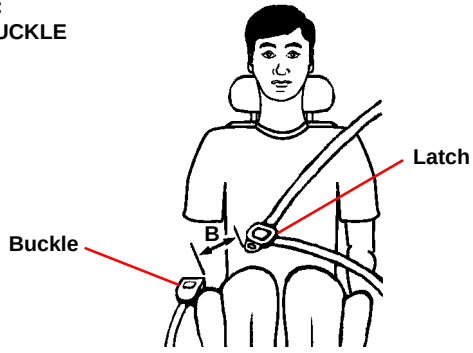

SEAT BELT EXTENDER CALCULATION		
DIMENSION A:	DIMENSION B:	CHECK NUMBER:

SEAT BELT EXTENDER AUTHORIZATION

- ***The same Seat Belt Extender can be used for right and left seating applications.*** **Each Seat Belt Extender will have a label identifying the owner, VIN and seating position. Seat Belt Extenders are available only in black.**
- **Applicant's Signature:**_____ **Date:**_____
  (Actual user of seat belt extender)

TOYOTA

Technical Service BULLETIN

October 27, 2000

Title:

WATER LEAK FIELD-FIX REPAIR INSTRUCTIONS

Models:

'97 – '03 Tacoma

TSB

BODY

BO026–00

REVISED

TSB Revision Notice:

August 25, 2003; VIN and Applicable Model Information has changed, and repair procedure has been expanded and clarified.

October 27, 2000; This TSB updates BO016–98 dated June 12, 1998.

The previous TSBs should be discarded.

Introduction

Use the following field–fix procedures if water is present on the floor carpeting and it can be confirmed that the water is leaking into the cab from either the upper cowl or side cowl seam, or moisture barrier behind the door trim panel.

Applicable Vehicles

- **1997 – 2003** model year **Tacoma** vehicles produced **BEFORE** the VIN shown below**:**

MODEL	STARTING VIN
Tacoma	5TE**#2N*3Z271193

Required Materials

MATERIALS	MANUFACTURER'S PART NUMBER	QTY
Kent Acrysol™ (24 oz. aerosol can)	60170	1
Kent Leak–Chek™ (24 oz. aerosol can)	50087	1
Kent 12" Extension Tube (for aerosol can)	90175	1
Kent High Tech™ Clear Seam Sealer (11 oz. cartridge)	10195	1
Kent Leak Trace™ Powder (optional)	20165	1
Kent Seal–N–Calk™ gray strip caulk sealer (optional)	10315	1
Kent Seal–N–Calk™ black strip caulk sealer (optional)	10310	1

NOTE:

Parts can be obtained from the local Kent™ representative or from Kent™ nationally at 1–800–654–6333.

Warranty Information

OP CODE	DESCRIPTION	TIME	OPN	T1	T2
BD8008	R & R Wiper Arms, Plastic Cowl Cover and Wiper Motor (Cowl Area Seam Sealer Leakage)	2.0	55700–04200	66	55
BD8009	R & R R/F Fender (Side Seam Sealer Leakage)	2.0	53701–04140		
BD8010	R & R Door Trim Panel (Door Moisture Barrier Sealer Leakage)	0.8	67831–04020		

Applicable Warranty*:

This repair is covered under the Toyota Basic Warranty. This warranty is in effect for 36 months or 36,000 miles, whichever occurs first, from the vehicle's in–service date.

* Warranty application is limited to correction of a problem based upon a customer's specific complaint.

Repair Procedure

1. Remove Wiper Arms, Plastic Cowl Cover and Wiper Motor (store wiper links up against bottom of windshield).

> **NOTE:**
> **Mark wiper arm linkage attached to wiper motor and wiper motor splined shaft prior to removing the 12 mm retaining nut.**

2. Spray Acrysol™ under entire lip of 1/2'' pinch weld and wipe dry with a clean paper towel.

FOLLOW DIRECTIONS ON SIDE OF CAN CAREFULLY.

Dry open seam with compressed air prior to applying sealer.

> **NOTE:**
> **Do not use a red shop towel to wipe surfaces because shop towels are contaminated with silicone.**

3. Apply a small bead of Kent High Tech™ Clear Seam Sealer to **underside** front edge of the pinch weld from fender to fender as shown.

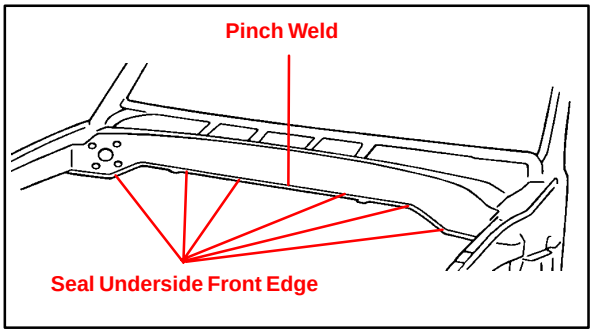

4. Apply Kent High Tech™ Clear Seam Sealer on all spot welds located on the floor of cowl panel.

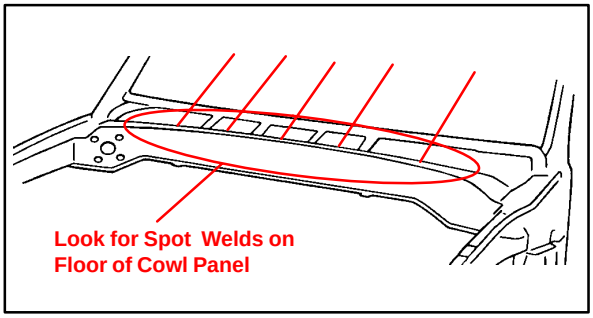

5. Apply Kent High Tech™ Clear Seam Sealer around outside base of hood safety stops, and seal outside corner, under the "L" bracket as shown.

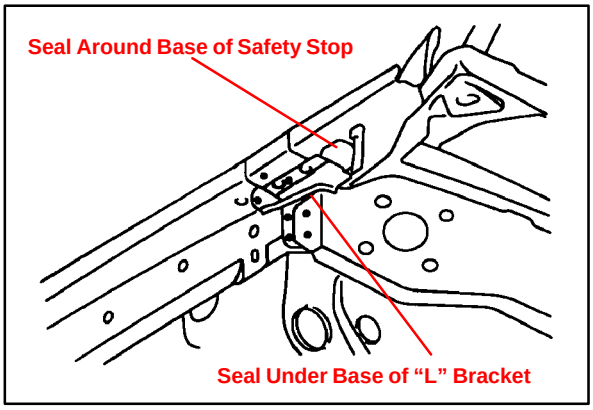

Repair Procedure (Continued)

6. Mask–off wiper motor opening.
7. Attach Kent™ 12'' extension tube (P/N 90175) to the nozzle on the can of **Leak–Chek**™ (P/N 50087).

NOTE:
Direct Leak–Chek™ spray material approximately 1 inch above seam. Spray force is very strong – make several test passes before actually spraying material into seam.

8. Spray **Leak–Chek**™ through the wiper motor opening.
   a. Spray material inside upper cowl, beginning in lower corner, and continuing toward the centerline of vehicle.
   b. Remove wand from the wiper motor opening and insert it into larger cowl openings on the right hand side. Continue spraying material along entire seam until seam is filled from R/F fender to L/F fender area.

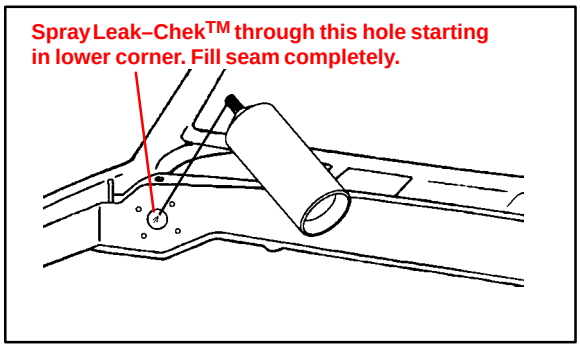

Spray **Leak–Chek**™ into seam a total of 3 times, allowing **Leak–Chek**™ to flash dry for 30–45 minutes between applications. (Drying time increases as outside temperature decreases.)

9. After final application of **Leak–Chek**™ has been allowed to dry for approximately one hour, flood area with water for 5–10 minutes.

NOTE:
Hold garden hose at top right front corner of windshield and point hose downward toward lower right hand corner of windshield as shown.

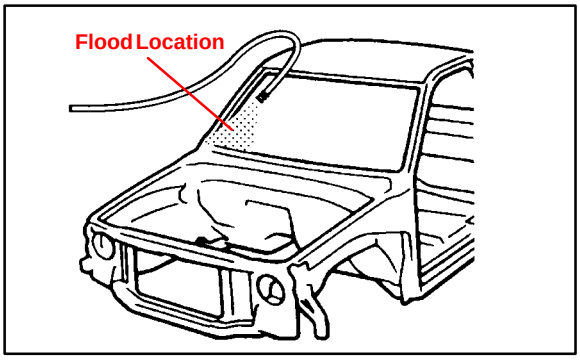

10. Check inside cab behind Heater/Air Conditioner box for evidence of water leakage during water leak check.
11. Carefully inspect "T" joint on right and left sides (close to heater motor box, and brake booster) for evidence of water leaks.
12. If no leaks are found, *cowl area leak repair is complete*. Reinstall wiper motor, cowl trim panel, wiper arms, and hood.

    Wiper Arm Torque: 20 N•m (205 kgf•cm, 15 ft•lbf)

If water leaks are still present and are coming in from the cowl area, *remove right front fender* and proceed as follows:

13. Seal around entire perimeter of "L" bracket with Kent High Tech™ Clear Seam Sealer (see drawing on page 2 for location of "L" bracket).

Repair Procedure (Continued)

14. Using a flashlight, look through the 2" x 3" rectangular hole on side of vertical cowl panel and locate vertical seam that connects side of cowl to front cowl.

If seam is not sealed properly, clean vertical and horizontal seam area with Acrysol™ cleaner. Use an air hose to dry all seams before applying sealer.

NOTE:
Hole is located behind fender.

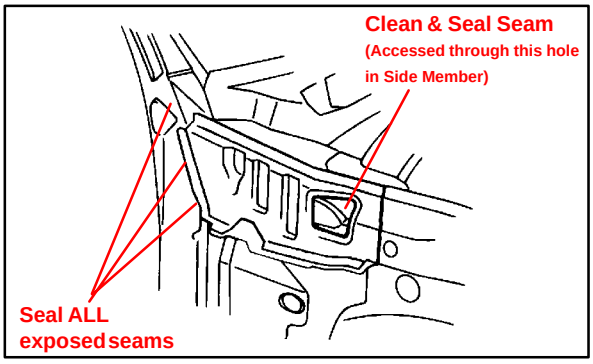

15. Attach a 12 to 18 inch length of plastic tubing to tip of Kent High Tech™ Clear Seam Sealer.

16. Seal entire vertical joint with High–Tech™ clear seam sealer. Allow sealer to dry according to instructions on tube.

NOTE:
Seams are inside boxed area and accessed through the square hole as shown.

17. Flood cowl area with water to confirm that there are no cowl seam leaks into cab.

If water leaks are still present and there are no cowl area seam leaks, reinstall front fender and inspect for water entry along lower edge of interior door trim panel; then proceed as follows:

18. Remove door trim panel.

19. Flood R/F door glass area (spray water at door glass, belt–molding area).

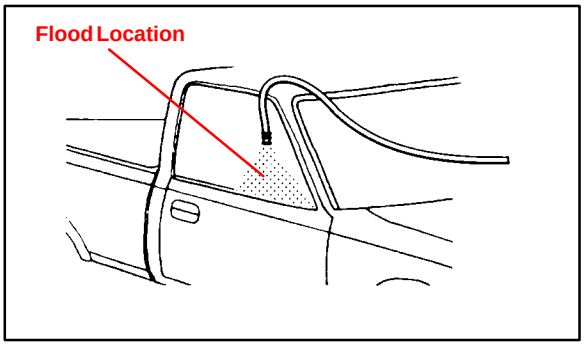

20. Inspect sealer between plastic sheeting (moisture barrier) and metal door panel for voids/skips in sealer.

    If there are voids/skips between the plastic sheet and the door panel, it will need to be resealed.

    A. Using a heat gun, heat the butyl tape securing the plastic sheet to make removal easier.

    B. Use Kent Acrysol to clean the door panel and plastic sheet.

NOTE:
- **Follow the directions provided by the cleaning agent.**
- **To ensure proper sealing of the plastic sheeting, it is important that the door panel and plastic sheeting is extremely clean.**

Repair Procedure (Continued)

C. Use 3M 8.0 mm butyl tape (P/N 08610) to reattach the plastic sheet to the door panel. Make sure there is a continuos solid bead sealing the plastic sheet to the door panel.

21. Inspect drain–back holes (small slits in metal door panel, near bottom of sealer) to determine if holes are covered by sealer material.

    If sealer covers drain–back holes (small slits in metal door panel) carefully pull up a portion of plastic sheet, clean out drain–back holes and reinstall plastic sheet against metal door panel. Confirm that there are no voids between sealer and plastic sheet and between sealer and metal door panel.

22. Flood all areas with water to confirm that there are no leaks into cab area.

23. If no leaks are present, reinstall door trim panel.

TOYOTA

Technical Service BULLETIN

December 7, 2001

Title:

WINDSHIELD WIPER BLADE MAINTENANCE AND CLEANING

Models:

All Models & All Years Through Current

BODY

REVISED BO030-01

TSB REVISION NOTICE:

July 13, 2004: The Applicable Vehicles has been changed to all models and all years through current.
All previous versions of this TSB should be discarded.

Introduction

The following procedures are recommended to maintain windshield wiper blade performance.

Applicable Vehicles

- **All models and model years through current.**

Warranty Information

OP CODE	DESCRIPTION	TIME	OFP	T1	T2
N/A	Not Applicable to Warranty	–	–	–	–

Maintenance, Cleaning and Use

Recommendations for Windshield Wiper Maintenance, Cleaning and Use:

1. Scheduled Maintenance
   - Check wiper rubber blades every 4 – 6 months or 7,500 miles for wear, cracking and contamination.
   - Clean glass and rubber wiper blades if blades are not clearing glass adequately. If this does not correct the problem, then replace the rubber elements.
2. Cleaning Procedure
   - Wiper Rubber: Bugs, dirt, sap and road grime on blades will cause streaking. Clean wiper rubber of road and environmental debris using cloth or paper towel soaked with windshield washer fluid or mild detergent.
   - **DO NOT USE** fuel, kerosene, or petroleum based products to clean rubber wiper blades.
   - Windshield: Bugs, road grime, sap and car wash wax treatments decrease wiper performance.
   - Rinse windshield with water and apply non–abrasive cleaner, such as Bon–Ami (www.faultless.com), with a sponge.

NOTE:

Make sure to use plenty of water with all powder based cleaners so the glass is not scratched.

Maintenance, Cleaning and Use (Continued)

3. Contributors to Poor Performance/Decreased Rubber Blade Life (require rubber replacement)
   - Dusty areas cause the rubber edge to wear quickly.
   - Sand and salt used for road conditioning during winter causes the edge to wear quickly, so areas with significant snowfall require more frequent wiper replacement.
   - Heat and time cause the rubber to become excessively “permanent set,” so the rubber does not turn over, resulting in streaking and/or unwiped areas on the glass.
   - Rubber is easily cut or torn while using ice scrapers on the glass.
   - Rubber can be torn when pulling blades off a frozen windshield.
   - Using wipers instead of an ice scraper to remove frost and ice from the windshield during a car warm up can dull, nick, or tear the rubber.
   - Banging wiper on the glass to remove ice & snow can cause the blade to bend and rubber to come out of the blade providing the potential to scratch the glass.
   - Ice forms in wiper blade pin joints, which causes streaking and unwiped areas. To remove ice from pin joints, compress the blade and rubber with your hand to loosen the frozen joints. To prevent this condition, use winter blades with a rubber cover.

TOYOTA
Technical Service BULLETIN
February 21, 1997

Title:
WIND NOISE REPAIR KIT

Models:
All Models

TSB

Introduction

A kit containing special foam sponge material has been developed. This kit, when used in conjunction with procedures outlined in the Wind Noise Service Information book (P/N 00401–42978), specific Service Tips and Technical Service Bulletins, should enable effective wind noise repairs.

Affected Vehicles

- **All Models**

Parts Information

PART NUMBER	PART NAME	SIZE (MM)	QTY
08231–00810	Kit, Wind Noise	——	1
08231–00811 *	Caulking Sponge Sealant No. 1	297 x 150 (T = 3.0)	2
08231–00812 *	Caulking Sponge Sealant No .2	297 x 150 (T = 5.0)	2
08231–00813 *	Caulking Sponge Sealant No. 3	297 x 150 (T = 10.0)	2
08231–00814 *	Caulking Sponge Sealant No. 4	297 x 150 (T = 3.0)	2
08231–00815 *	Caulking Sponge Sealant No. 5	297 x 150 (T = 5.0)	2
08231–00816 *	Caulking Sponge Sealant No. 6	297 x 150 (T = 5.0)	2

* All of these parts are included in the kit.

Kit Components

1. Caulking Sponge Sealant No. 1, No. 2 and No. 3 (Ept–sealer).

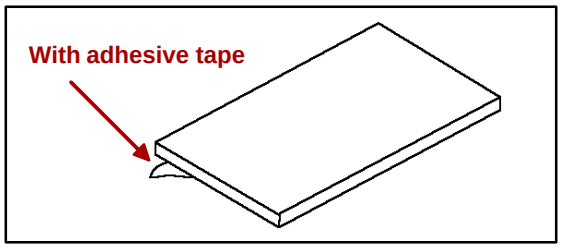

2. Caulking Sponge Sealant No. 4 and No. 5 (Ept–sealer). This sheet is divided into 27 strips, 5 mm wide.

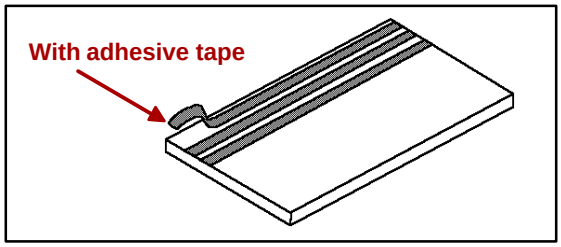

3. Caulking Sponge Sealant No. 6 (Ept–sealer).

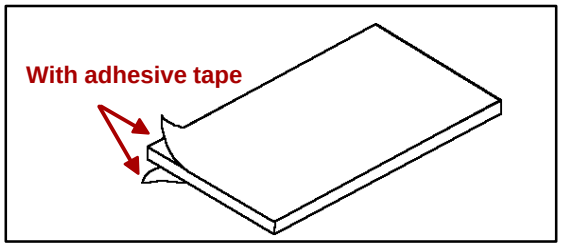

TOYOTA

Technical Service BULLETIN

July 28, 2000

Title:

FRONT MUDGUARDS

Models:

’95 – ’00 Tacoma 4x4 & PreRunner

TSB

Introduction

To help prevent damage to the exterior finish of Tacoma 4x4 and PreRunner vehicles, the front mudguards have been increased in width by 25 mm.

Applicable Vehicles

- **1995 – 2000** model year **Tacoma 4x4** and **PreRunner** vehicles.

Production Change Information

MODEL	STARTING VIN
Tacoma 4x4	4TAPM62N*YZ653866
Tacoma PreRunner	

Parts Information

PREVIOUS PART NUMBER	CURRENT PART NUMBER	PART NAME
76621–04030 (RH)	76621–04040 (RH)	Mudguard, Front RH
76622–04030 (LH)	76622–04040 (LH)	Mudguard, Front LH

Repair Procedure

Replace the previous mudguards with the countermeasure mudguards.

Warranty Information

OP CODE	DESCRIPTION	TIME	OPN	T1	T2
610101	R & R Front Mudguard Assemblies	0.3	76622–04030	95	57

Applicable Warranty*:

This repair is covered under the Toyota Basic Warranty. This warranty is in effect for 36 months or 36,000 miles, whichever occurs first, from the vehicle’s in–service date.

* Warranty application is limited to correction of a problem based upon a customer’s specific complaint.

TOYOTA

Technical Service BULLETIN

October 20, 2000

Title:

BRAKE PAD CLICKING NOISE

Models:

'90 – '00 All Models

TSB

Introduction

A clicking type noise may be noticed when first applying the brakes after changing vehicle travel direction (*Drive/Forward* to *Reverse, Reverse* to *Drive/Forward*). This is a normal noise caused by the required brake pad–to–caliper clearances. When the direction of travel is changed, the brake pads may "shift" towards the new direction of travel. When the brake pad contacts the caliper, a clicking noise may be heard.

To minimize this clicking noise, a disc brake caliper grease has been made available for use during brake service/maintenance operations. Under normal usage conditions this grease should be effective for a period of 6 months to 1 year.

Applicable Vehicles

- **1990 – 2000** model year **Toyota vehicles, all models.**

Parts Information

PREVIOUS PART NUMBER	CURRENT PART NUMBER	PART NAME
N/A	08887–80609	Disc Brake Caliper Grease (50 g tube)

Warranty Information

OP CODE	DESCRIPTION	TIME	OPN	T1	T2
N/A	Not Applicable to Warranty	–	–	–	–

Application Procedure

There are two types of brake calipers: floating and fixed. Check the type of brake caliper installed on the vehicle by removing the wheel assembly.

1. Floating Type Brake Caliper

A. Lift up or remove the brake caliper and suspend it securely.

HINT:

Do not disconnect the flexible hose from the brake caliper.

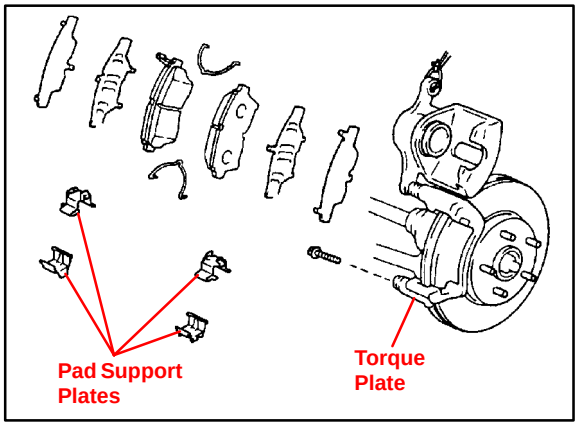

B. If equipped with anti–squeal spring: Remove the anti–squeal springs.

C. Remove the brake pads with anti–squeal shims.

D. Remove the pad support plates from the torque plate. Clean any dust from the pad support plates, torque plates and brake pads.

E. Apply a small amount of the disc brake caliper grease (1–2 mm thick) to both sides of the pad support plates.

NOTE:

Do NOT apply grease to the friction surfaces of the brake pads or the disc rotor.

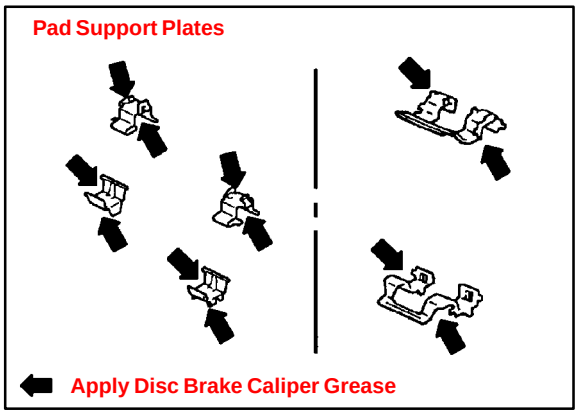

F. If the pad support plate is fixed to the torque plate with adhesive tape, perform the operation according to the following flow chart.

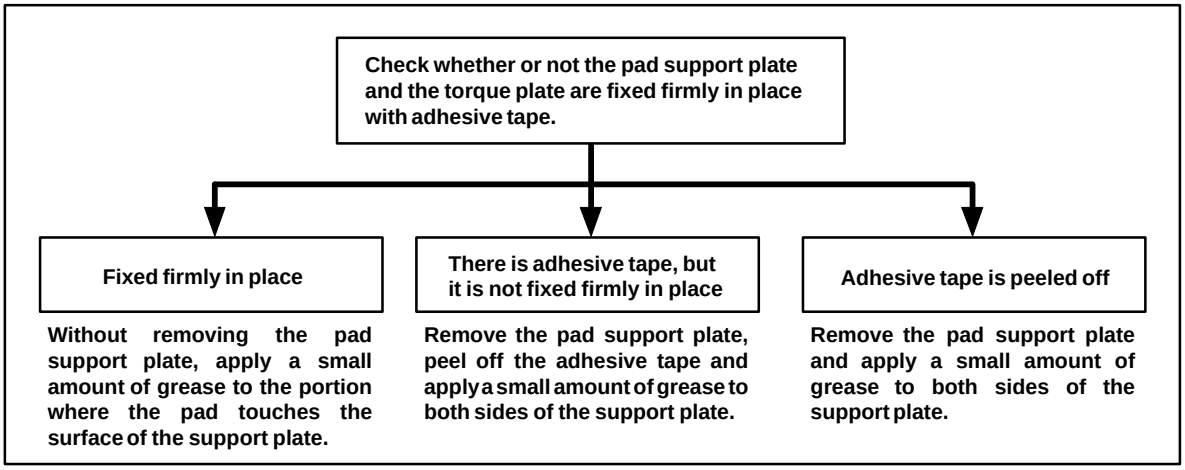

Application Procedure (Continued)

G. Apply a small amount of the disc brake caliper grease (1–2 mm thick) to the caliper as indicated in the illustration.

H. Install the brake pads with the anti–squeal shims.

I. If equipped with anti–squeal spring: Install the anti–squeal springs.

J. Press the piston in firmly and install the brake caliper.

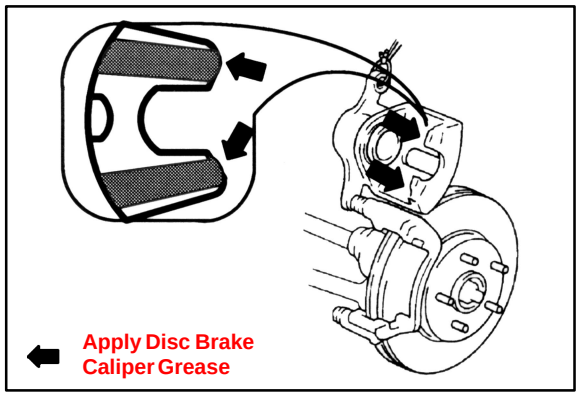

NOTE:
- **Clean excess grease from brake pad and caliper.**
- **Do NOT apply grease to the friction surfaces of the brake pads or the disc rotor.**

K. Install the wheel assembly.

2. Fixed Type Brake Caliper

There are two types of brake pads:

- Type “**A**”: Has a projection on the upper and lower side of the brake pad. (See illustration.)
- Type “**B**”: Has a flat upper and lower edge on the brake pad backing plate.

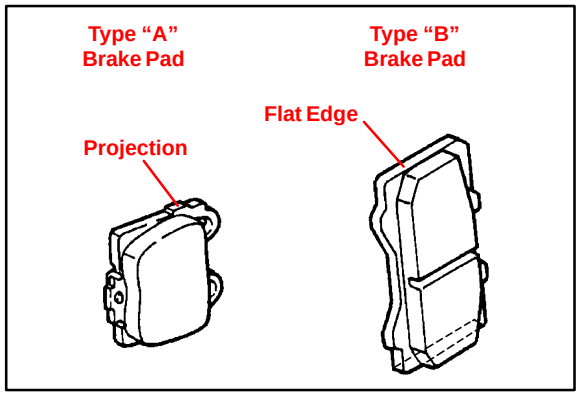

Type “A” Brake Pad

A. Remove the anti–squeal spring, clip and pad guide pin.

B. Remove the brake pads with the anti–squeal shims.

C. Clean any dust from the brake pads.

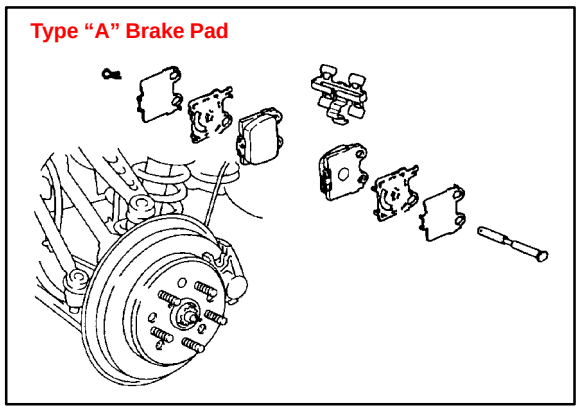

Application Procedure (Continued)

D. Apply a small amount of the disc brake caliper grease (1–2 mm thick) to the areas indicated in the illustration.

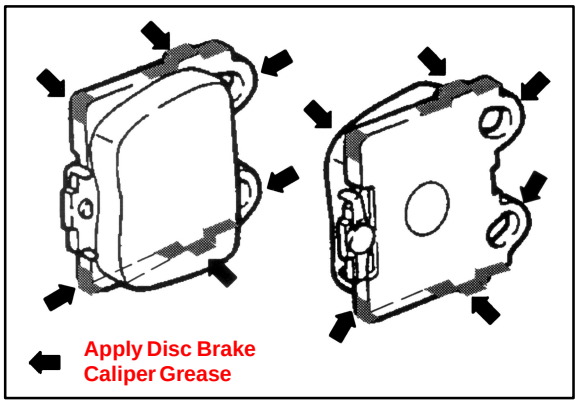

NOTE:
Do NOT apply grease to the friction surfaces of the brake pads or the disc rotor.

E. Install the brake pads with the anti–squeal shims.

NOTE:
Clean excess grease from the brake pads and caliper.

F. Install the pad guide pin, clip and anti–squeal spring.

G. Install the wheel assembly.

Type “B” Brake Pad

A. Remove the clip, pins and anti–rattle spring/pad retainer clip.

B. Remove the brake pads with the anti–squeal shims.

C. Clean any dust from the brake pads.

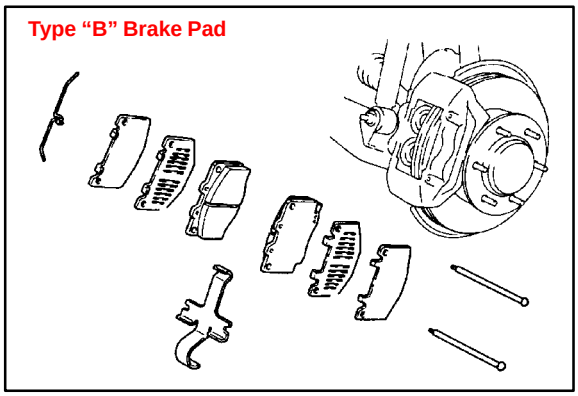

D. Apply a small amount of the disc brake caliper grease (1–2 mm thick) to the areas indicated in the illustration.

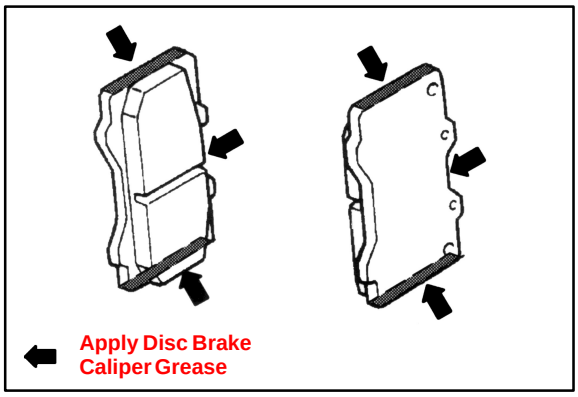

NOTE:
Do NOT apply grease to the friction surfaces of the brake pads or the disc rotor.

E. Install the brake pads with the anti–squeal shims.

NOTE:
Clean excess grease from the brake pads and caliper.

F. Install the pad guide pin, clip and anti–squeal spring.

G. Install the wheel assembly.

TOYOTA

Technical Service BULLETIN

August 27, 1999

Title:

PROPELLER SHAFT JOINT GREASE

Models:

'96–'99 4Runner 4WD, '95–'99 Tacoma 4WD, '98–'99 PreRunner, & '00 Tundra 4WD

TSB

Introduction

This Service Bulletin provides the location of the grease fittings for the propeller shaft joints as well as the type of grease to use with each fitting location. See the Scheduled Maintenance Guide of each vehicle for recommended lubrication intervals.

Applicable Vehicles

- **1996–1999 4Runner 4WD, 1995–1999 Tacoma 4WD, 1998–1999 PreRunner, & 2000 Tundra 4WD**

Warranty Information

OP CODE	DESCRIPTION	TIME	OPN	T1	T2
–	Not Applicable to Warranty	–	–	–	–

Procedure for 4Runner

Use a grease gun to apply multi–purpose grease to the No. 1, 2, 3, 7 and 8 grease fittings. Apply molybdenum disulfide lithium base chassis grease, NLGI No. 2, to the No. 4, 5 and 6 grease fittings (double cardan joint).

Grease Fittings for 4WD Front Propeller Shaft



NOTE:
The figure at the left shows the locations of the grease fittings as seen from the rear of the vehicle.

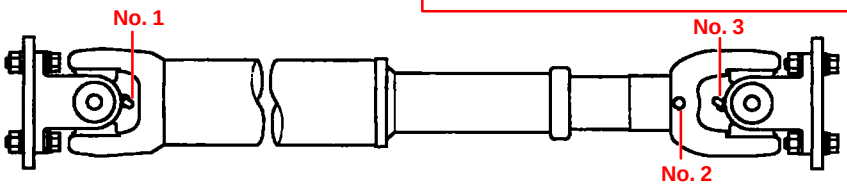

Grease Fittings for 4WD Rear Propeller Shaft

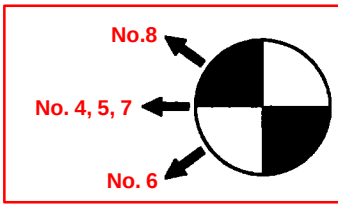

NOTE:
The figure at the left shows the locations of the grease fittings as seen from the rear of the vehicle.

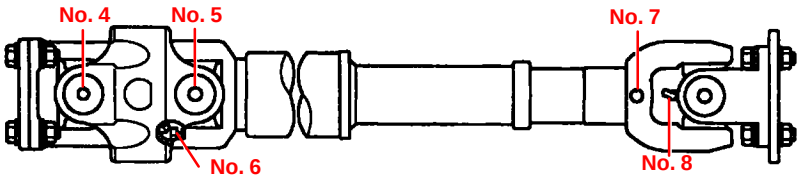

Procedure for Tacoma & PreRunner

Use a grease gun to apply multi–purpose grease to the No. 1, 2, 3, 7 8, 9, 13 and 14 grease fittings. Apply molybdenum disulfide lithium base chassis grease, NLGI No. 2, to the No. 4, 5, 6, 10, 11 and 12 grease fittings (double cardan joint).

Grease Fittings for 4WD Front Propeller Shaft

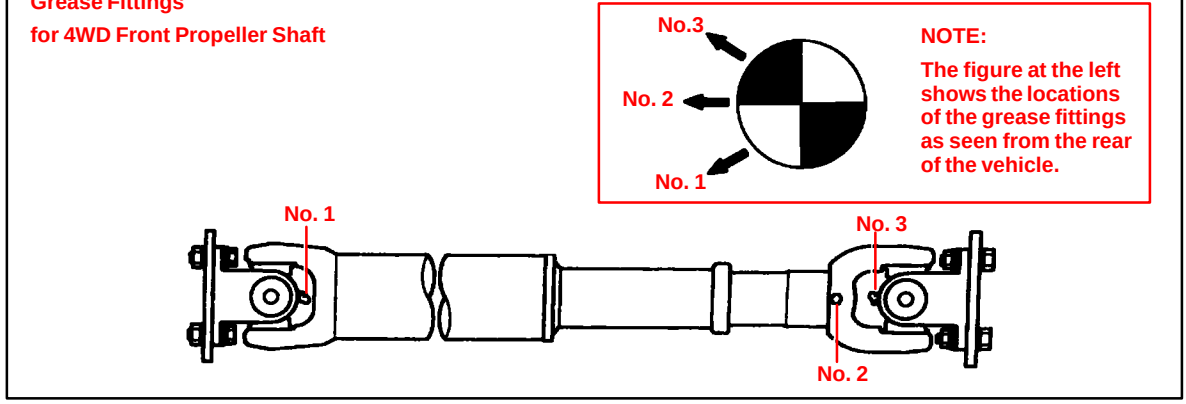

Grease Fittings for PreRunner Propeller Shaft and 4WD Rear Propeller Shaft

2 Joint Type:

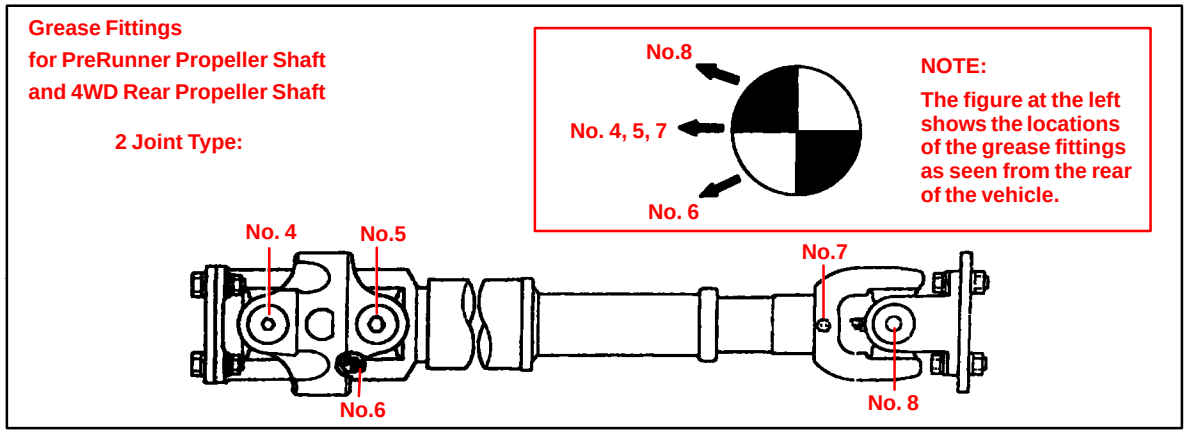

Grease Fittings for PreRunner Propeller Shaft and 4WD Rear Propeller Shaft

3 Joint Type:

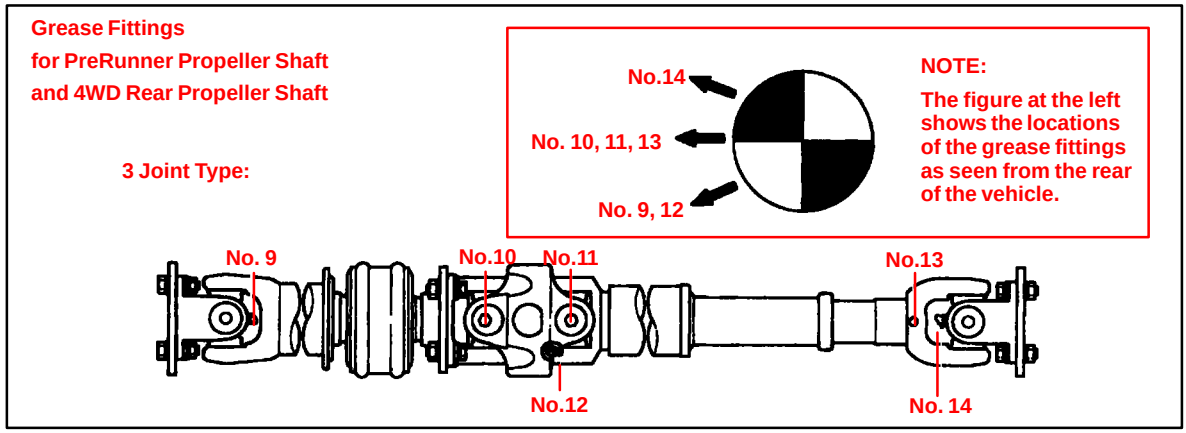

Procedure for Tundra

Use a grease gun to apply multi–purpose grease to the No. 1, 2, 3, 7 and the slip yoke grease fittings. Apply molybdenum disulfide lithium base chassis grease, NLGI No. 2, to the No. 4, 5, and 6 grease fittings (double cardan joint).

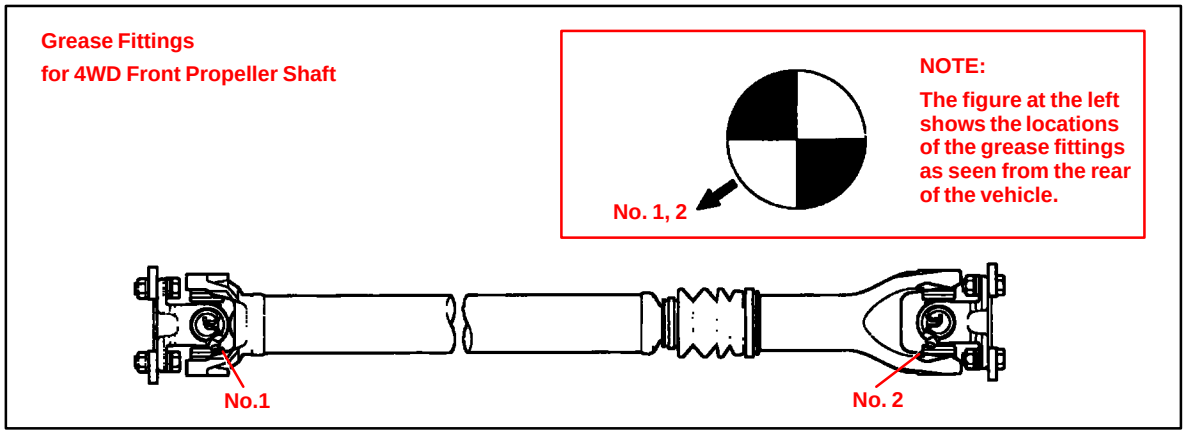

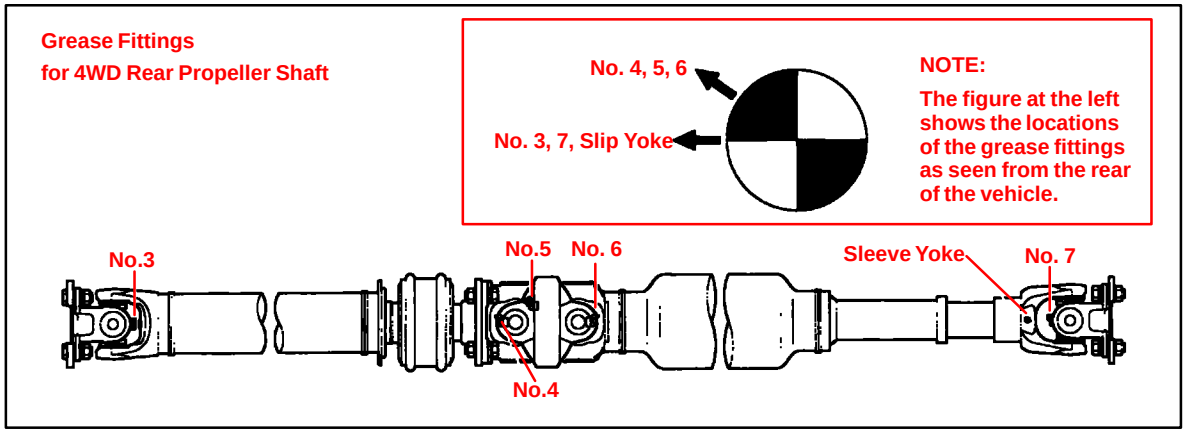

TOYOTA

Technical Service BULLETIN

August 6, 2003

Title:

REAR AXLE SEAL DESIGN CHANGE

Models:

'01 – '02 Sequoia, '95 – '02 Tacoma & '00 – '02 Tundra

TSB

Introduction

The rear axle seal lip design has been changed from a flat face type to an angled face type. A different SST seal driver is required to install the seal properly and prevent damaging the oil seal during the installation process.

NOTE:

Use of SST part number 09951–00610 (Replacer 64) as listed in the Repair Manual to install the newly designed rear axle seal can damage the seal assembly causing it to leak. Repair Manual update on Technical Information System (TIS) is in process.

Applicable Vehicles

- **2001 – 2002** model year **Sequoia** vehicles.
- **1995 – 2002** model year **Tacoma** vehicles.
- **2000 – 2002** model year **Tundra** vehicles.

Parts Information

APPLICATION	PREVIOUS PART NUMBER	CURRENT PART NUMBER	PART NAME
2001 – 2002 Sequoia	90310–56001	90310–56002	Seal, Type T
1995 – 2002 Tacoma	90310–50001	90310–50006	Seal, Type T
2000 – 2002 Tundra			

Required SSTs

SPECIAL SERVICE TOOLS (SSTs)	PART NUMBER	QUANTITY
Replacer Set #2 	09950–60020–01	1
Handle Set 	09950–70010–01	1

* Essential SSTs.

NOTE:

Additional SSTs may be ordered by calling SPX/OTC at 1-800-933-8335.

Required Tools & Material

TOOLS & MATERIAL	QUANTITY
Hammer	As Needed

Warranty Information

OP CODE	DESCRIPTION	TIME	OFP	T1	T2
N/A	Not Applicable to Warranty	–	–	–	–

Identification Procedure

The design of the rear axle seal has been changed from a flat face to an angled face for part number 90310–50006 and part number 90310–56002.

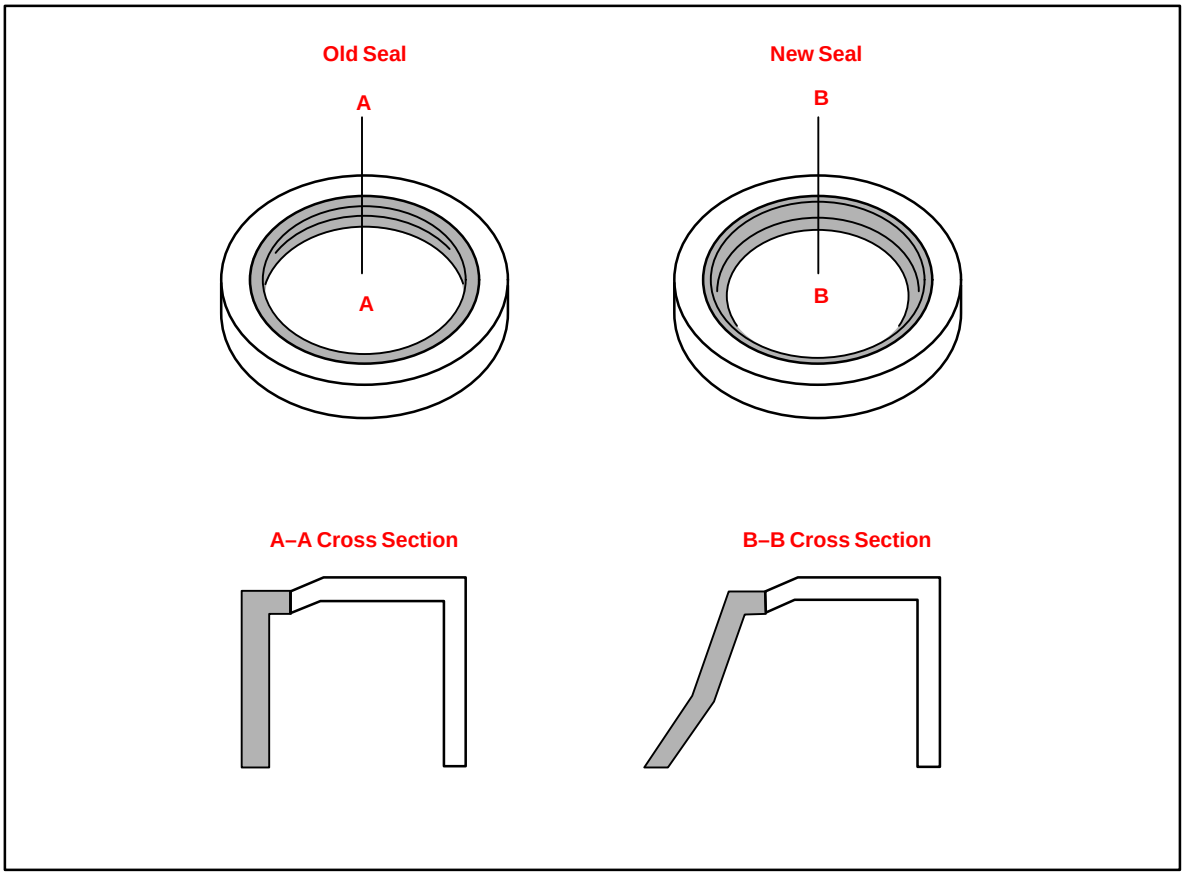

Installation Procedure

Sequoia

To properly install Rear Axle Oil Seal part number 90310–56002, use the following SSTs and a hammer to install the new oil seal:

- SST P/N 09950–60020–01 (09951–00730–01) – **Replacer 73**
- SST P/N 09951–70010–01 (09951–07150–01) – Handle

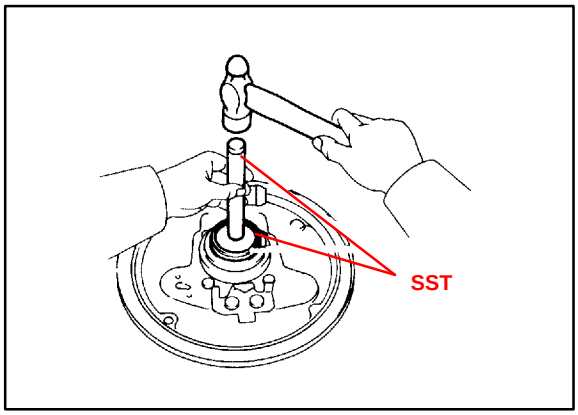

Tacoma & Tundra

To properly install Rear Axle Oil Seal part number 90310–56006, use the following SSTs and a hammer to install the new oil seal:

- SST P/N 09950–60020–01 (09951–00710) – **Replacer 71**
- SST P/N 09951–70010–01 (09951–07150–01) – Handle

TOYOTA

Technical Service BULLETIN

March 29, 2002

Title:

READINESS MONITOR DRIVE PATTERNS

Models:

All '96 – '02

TSB

REVISED

ENGINE

EG003-02

TSB REVISION NOTICE:

The information updated in this TSB is red and underlined.

Introduction

The On–Board Diagnostic (OBDII) system is designed to monitor the performance of emission–related components and report any detected abnormalities in the form of Diagnostic Trouble Codes (DTCs). Since the various components need to be monitored during different driving conditions, the OBDII system is designed to run separate monitoring programs called Readiness Monitors. Many state Inspection and Maintenance (I/M) programs require that vehicles complete their Readiness Monitors prior to beginning an emissions test.

The current status of the Readiness Monitors can be seen by using the Toyota Diagnostic Tester with version 9.0 software (or newer), or a generic OBDII Scantool.
To view the Readiness Monitor status using the Toyota Diagnostic Tester, select "Monitor Status" from the Enhanced OBDII Menu.
A status of "complete" indicates that the necessary conditions have been met to run the performance tests for the related Readiness Monitor.

The Readiness Monitor will be reset to "incomplete" if:

- ECU has lost power (battery or fuse).
- DTCs have been cleared.
- The conditions for running the Readiness Monitor have not been met.

In the event that any Readiness Monitor shows "incomplete," follow the appropriate Readiness Monitor Drive Pattern to change the readiness status to "complete."
Refer to the Readiness Monitor Drive Pattern Application Table to determine which drive pattern should be followed.

Contents

SECTION		PAGE(S)
Readiness Monitor Drive Pattern Application Tables		3–9
Readiness Monitor Drive Patterns		
1	EGR Monitor (All Except 1FZ–FE Engine)	10
2	EGR Monitor (For 1FZ–FE Engine)	11
3	Catalyst Monitor (O2S Type)	12
4	Catalyst Monitor (AF Sensor Type)	13
5	EVAP Monitor (Internal Pressure Monitor/Non–Intrusive Type)	14–15
6	EVAP Monitor (Vacuum Pressure Monitor/Intrusive Type)	16–17
7	EVAP Monitor (Without Leak Detection)	18
8	EVAP Monitor (For Prius)	19–20
9	Oxygen Sensor Monitor (Front and Rear O2S System)	21
10	Oxygen/AF Sensor Monitor (Front AF Sensor and Rear O2S System)	22
11	Oxygen/AF Sensor Heater Monitor	23

Applicable Vehicles

- **All 1996 – 2002** model year **Toyota** vehicles.

Warranty Information

OP CODE	DESCRIPTION	TIME	OPN	T1	T2
N/A	Not Applicable to Warranty	–	–	–	–

Terms & Definitions

J1930 TERM	J1930 DEFINITION	TOYOTA/LEXUS DIAGNOSTIC TESTER PARAMETER
IAT	Intake Air Temperature	Intake Air
ECT	Engine Coolant Temperature	Coolant Temp

Required Tools & Material

TOOLS & MATERIAL	PART NUMBER	QUANTITY
Toyota Diagnostic Tester Kit	01001271	1
12 Megabyte Diagnostic Tester Program Card with version 9.0a Software (or later)	01002593-005	1

NOTE:

A generic OBDII Scantool can be used in place of the Toyota Diagnostic Tester.

CAUTION:

Strict observance of posted speed limits, traffic laws and road conditions are required when performing these drive patterns.

NOTE:

- **These drive patterns represent the fastest method to satisfy all necessary conditions which allow the specific Readiness Monitor to complete.**
- **In the event that the drive pattern must be interrupted (possibly due to traffic conditions or other factors) the drive pattern can be resumed and, in most cases, the Readiness Monitor will still set to "complete."**
- **To ensure rapid completion of Readiness Monitors, avoid sudden changes in vehicle load and speed (driving up and down hills and/or sudden acceleration).**

Underhood Emission Control Information Label

SAMPLE EMISSION CONTROL INFORMATION LABEL

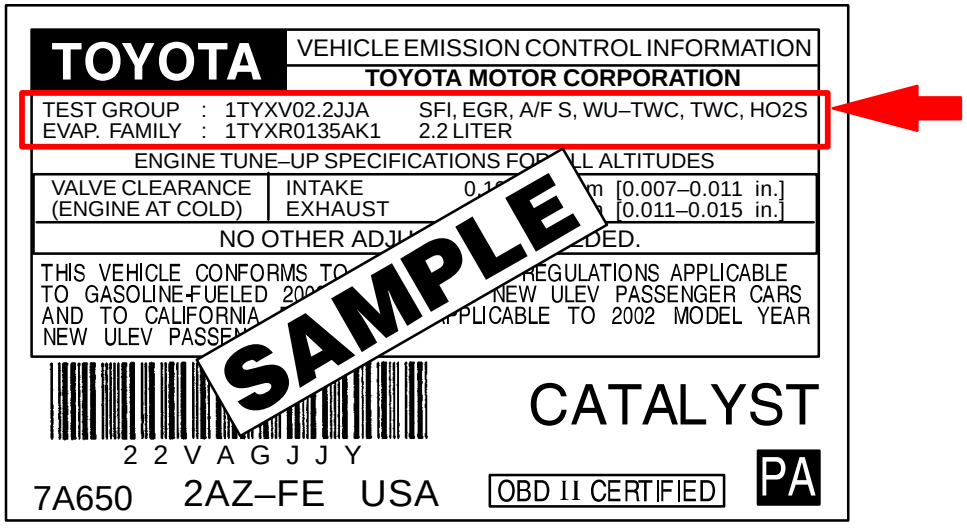

EGR = Exhaust Gas Recirculation
A/F S = Air Fuel Sensor
O2S = Oxygen Sensor

Readiness Monitor Drive Pattern Application Tables

MODEL YEAR	MODEL	ENGINE	DRIVE TRAIN	CATEGORY	DRIVE PATTERN NUMBER*										
					EGR		CATALYST		EVAP				O2S/AF SENSOR		O2S/AF HTR
					1	2	3	4	5	6	7	8	9	10	11
1996	Tercel	5E–FE			X		X				X		X		X
	Paseo	5E–FE			X		X				X		X		X
	Corolla	7A–FE			X		X				X		X		X
	Celica	7A–FE			X		X				X		X		X
		5S–FE			X		X				X		X		X
	Camry	5S–FE	MTM		X		X				X		X		X
			ATM		X		X		X				X		X
		1MZ–FE	MTM		X		X		X				X		X
			ATM		X		X		X				X		X
	Avalon	1MZ–FE			X		X		X				X		X
	Supra	2JZ–GE			X		X		X				X		X
		2JZ-GTE			X		X				X		X		X
	RAV4	3S–FE			X		X		X				X		X
	Previa	2TZ–FZE			X		X				X		X		X
	Tacoma	2RZ–FE			X		X				X		X		X
		3RZ–FE			X		X		X				X		X
		5VZ–FE	2WD		X		X		X				X		X
			4WD	w/EGR**	X		X		X				X		X
				w/oEGR**	N/A		X		X				X		X
	4Runner	3RZ–FE			X		X		X				X		X
		5VZ–FE		w/EGR**	X		X		X				X		X
				w/oEGR**	N/A		X		X				X		X
	T100	3RZ–FE			X		X				X		X		X
		5VZ–FE	2WD or 4WD	w/EGR**	X		X		X				X		X
				w/oEGR**	N/A		X		X				X		X
	Land Cruiser	1FZ–FE				X	X		N/A				X		X

*** Readiness Monitor Drive Patterns:**

1. EGR (All Except 1FZ–FE Engine)
2. EGR (For 1FZ–FE Engine)
3. Catalyst (O2S Type)
4. Catalyst (AF Sensor Type)
5. EVAP (Internal Pressure Monitor/Non–Intrusive Type)
6. EVAP (Vacuum Pressure Monitor/Intrusive Type)
7. EVAP (Without Leak Detection)
8. EVAP (For Prius)
9. Oxygen Sensor Monitor (Front & Rear O2S System)
10. Oxygen/AF Sensor Monitor (Front AF Sensor & Rear O2S System)
11. Oxygen/AF Sensor Heater Monitor

**** Refer to Underhood Emissions Label on page 2.**

Readiness Monitor Drive Pattern Application Tables (Continued)

MODEL YEAR	MODEL	ENGINE	DRIVE TRAIN	CATEGORY	DRIVE PATTERN NUMBER*										
					EGR		CATALYST		EVAP				O2S/AF SENSOR		O2S/AF HTR
					1	2	3	4	5	6	7	8	9	10	11
1997	Tercel	5E–FE			X		X				X		X		X
	Paseo	5E–FE			X		X				X		X		X
	Corolla	7A–FE			X		X				X		X		X
	Celica	7A–FE			X		X				X		X		X
		5S–FE			X		X				X		X		X
	Camry	5S–FE	MTM		X		X				X		X		X
			ATM	Fed	X		X		X				X		X
				CA	X			X	X					X	X
		1MZ–FE	MTM		X		X		X				X		X
			ATM		X		X		X				X		X
	Avalon	1MZ–FE			X		X		X				X		X
	Supra	2JZ–GE			X		X		X				X		X
		2JZ-GTE			X		X				X		X		X
	RAV4	3S–FE			X		X		X				X		X
	Previa	2TZ–FZE			X		X				X		X		X
	Tacoma	2RZ–FE			X		X				X		X		X
		3RZ–FE			X		X		X				X		X
		5VZ–FE	2WD or 4WD	w/EGR**	X		X		X				X		X
			4WD	w/oEGR**	N/A		X		X				X		X
	4Runner	3RZ–FE			X		X		X				X		X
		5VZ–FE			N/A		X		X				X		X
	T100	3RZ–FE			X		X				X		X		X
		5VZ–FE	2WD	w/EGR**	X		X		X				X		X
			2WD or 4WD	w/oEGR**	N/A		X		X				X		X
	Land Cruiser	1FZ–FE				X	X		N/A				X		X

*** Readiness Monitor Drive Patterns:**

1. EGR (All Except 1FZ–FE Engine)
2. EGR (For 1FZ–FE Engine)
3. Catalyst (O2S Type)
4. Catalyst (AF Sensor Type)
5. EVAP (Internal Pressure Monitor/Non–Intrusive Type)
6. EVAP (Vacuum Pressure Monitor/Intrusive Type)
7. EVAP (Without Leak Detection)
8. EVAP (For Prius)
9. Oxygen Sensor Monitor (Front & Rear O2S System)
10. Oxygen/AF Sensor Monitor (Front AF Sensor & Rear O2S System)
11. Oxygen/AF Sensor Heater Monitor

**** Refer to Underhood Emissions Label on page 2.**

Readiness Monitor Drive Pattern Application Tables (Continued)

MODEL YEAR	MODEL	ENGINE	DRIVE TRAIN	CATEGORY	DRIVE PATTERN NUMBER*										
					EGR		CATALYST		EVAP				O2S/AF SENSOR		O2S/AF HTR
					1	2	3	4	5	6	7	8	9	10	11
1998	Tercel	5E–FE			N/A		X		X				X		X
	Paseo	5E–FE					X		X				X		X
	Corolla	1ZZ–FE					X		X				X		X
	Celica	5S–FE			X		X				X		X		X
	Camry	5S–FE		Fed	X		X		X				X		X
				CA	X			X	X					X	X
		1MZ–FE	MTM		X		X		X				X		X
			ATM	Fed	X		X		X				X		X
				CA	X			X	X					X	X
	Avalon	1MZ–FE		Fed	X		X		X				X		X
				CA	X			X	X					X	X
	Supra	2JZ–GE			N/A		X		X				X		X
		2JZ-GTE			X		X				X		X		X
	RAV4	3S–FE		Fed	X		X		X				X		X
				CA	X			X	X					X	X
	Sienna	1MZ–FE			N/A		X		X				X		X
	Tacoma	2RZ–FE			X		X		X				X		X
		3RZ–FE			X		X		X				X		X
		5VZ–FE	2WD	w/EGR**	X		X		X				X		X
			4WD	w/oEGR**	N/A		X		X				X		X
	4Runner	3RZ–FE			X		X		X				X		X
		5VZ–FE			N/A		X		X				X		X
	T100	3RZ–FE			X		X		X				X		X
		5VZ–FE	2WD	w/EGR**	X		X		X				X		X
			2WD or 4WD	w/oEGR**	N/A		X		X				X		X
	Land Cruiser	2UZ–FE					X		X				X		X

*** Readiness Monitor Drive Patterns:**

1. EGR (All Except 1FZ–FE Engine)
2. EGR (For 1FZ–FE Engine)
3. Catalyst (O2S Type)
4. Catalyst (AF Sensor Type)
5. EVAP (Internal Pressure Monitor/Non–Intrusive Type)
6. EVAP (Vacuum Pressure Monitor/Intrusive Type)
7. EVAP (Without Leak Detection)
8. EVAP (For Prius)
9. Oxygen Sensor Monitor (Front & Rear O2S System)
10. Oxygen/AF Sensor Monitor (Front AF Sensor & Rear O2S System)
11. Oxygen/AF Sensor Heater Monitor

**** Refer to Underhood Emissions Label on page 2.**

Readiness Monitor Drive Pattern Application Tables (Continued)

MODEL YEAR	MODEL	ENGINE	DRIVE TRAIN	CATEGORY	DRIVE PATTERN NUMBER*										
					EGR		CATALYST		EVAP				O2S/AF SENSOR		O2S/AF HTR
					1	2	3	4	5	6	7	8	9	10	11
1999	Tercel	5E–FE			X		X		X				X		X
	Paseo	5E–FE			X		X		X				X		X
	Corolla	1ZZ–FE			N/A		X		X				X		X
	Celica	5S–FE			X		X		X				X		X
	Camry	5S–FE		Fed	X		X		X				X		X
				CA	X			X	X					X	X
		1MZ–FE	MTM		X		X		X				X		X
			ATM	Fed	X		X		X				X		X
				CA	X			X	X					X	X
	Solara	5S–FE		Fed	X		X		X				X		X
				CA	X			X	X					X	X
		1MZ–FE	MTM		X		X		X				X		X
			ATM	Fed	X		X		X				X		X
				CA	X			X	X					X	X
	Avalon	1MZ–FE		Fed	X		X		X				X		X
				CA	X			X	X					X	X
	RAV4	3S–FE		Fed	X		X		X				X		X
				CA	X			X	X					X	X
	Sienna	1MZ–FE		Fed	N/A		X		X				X		X
				CA				X	X					X	X
	Tacoma	2RZ–FE			X		X		X				X		X
		3RZ–FE			X		X		X				X		X
		5VZ–FE	2WD	w/EGR**	X		X		X				X		X
			2WD or 4WD	w/oEGR**	N/A		X		X				X		X
	4Runner	3RZ–FE			X		X		X				X		X
		5VZ–FE		Fed	N/A		X		X				X		X
				CA				X	X					X	X
	Land Cruiser	2UZ–FE					X		X				X		X

*** Readiness Monitor Drive Patterns:**

1. EGR (All Except 1FZ–FE Engine)
2. EGR (For 1FZ–FE Engine)
3. Catalyst (O2S Type)
4. Catalyst (AF Sensor Type)
5. EVAP (Internal Pressure Monitor/Non–Intrusive Type)
6. EVAP (Vacuum Pressure Monitor/Intrusive Type)
7. EVAP (Without Leak Detection)
8. EVAP (For Prius)
9. Oxygen Sensor Monitor (Front & Rear O2S System)
10. Oxygen/AF Sensor Monitor (Front AF Sensor & Rear O2S System)
11. Oxygen/AF Sensor Heater Monitor

**** Refer to Underhood Emissions Label on page 2.**

Readiness Monitor Drive Pattern Application Tables (Continued)

MODEL YEAR	MODEL	ENGINE	DRIVE TRAIN	CATEGORY	DRIVE PATTERN NUMBER*										
					EGR		CATALYST		EVAP				O2S/AF SENSOR		HTR
					1	2	3	4	5	6	7	8	9	10	11
2000	ECHO	1NZ–FE			N/A		X			X			X		X
	Corolla	1ZZ–FE					X			X			X		X
	Celica	1ZZ–FE					X			X			X		X
		2ZZ–GE					X			X			X		X
	MR2	1ZZ–FE					X			X			X		X
	Camry	5S–FE		Fed	X		X			X			X		X
				CA	X			X		X				X	X
		1MZ–FE	MTM		X		X			X			X		X
			ATM	Fed	X		X			X			X		X
				CA	X			X		X				X	X
	Solara	5S–FE		Fed	X		X			X			X		X
				CA	X			X		X				X	X
		1MZ–FE	MTM		X		X			X			X		X
			ATM	Fed	X		X			X			X		X
				CA	X			X		X				X	X
	Camry CNG	5S–FNE			X		N/A		N/A					X	X
	Avalon	1MZ–FE			N/A			X		X				X	X
	RAV4	3S–FE		Fed	X		X		X				X		X
				CA	X			X	X					X	X
	Sienna	1MZ–FE		Fed	N/A		X		X				X		X
				CA				X	X					X	X
	Tacoma	2RZ–FE			X		X		X				X		X
		3RZ–FE			X		X		X				X		X
		5VZ–FE	2WD	w/EGR**	X		X		X				X		X
			2WD or 4WD	w/o A/F S, w/oEGR**	N/A		X		X				X		X
				w/A/F S, w/oEGR**				X	X					X	X
	4Runner	3RZ–FE			X		X		X				X		X
		5VZ–FE		Fed	N/A		X		X				X		X
				CA				X	X					X	X
	Tundra	5VZ–FE		Fed			X		X				X		X
				CA				X	X					X	X
		2UZ–FE					X		X				X		X
	Land Cruiser	2UZ–FE					X		X				X		X

*** Readiness Monitor Drive Patterns:**

1. EGR (All Except 1FZ–FE Engine)
2. EGR (For 1FZ–FE Engine)
3. Catalyst (O2S Type)
4. Catalyst (AF Sensor Type)
5. EVAP (Internal Pressure Monitor/Non–Intrusive Type)
6. EVAP (Vacuum Pressure Monitor/Intrusive Type)
7. EVAP (Without Leak Detection)
8. EVAP (For Prius)
9. Oxygen Sensor Monitor (Front & Rear O2S System)
10. Oxygen/AF Sensor Monitor (Front AF Sensor & Rear O2S System)
11. Oxygen/AF Sensor Heater Monitor

**** Refer to Underhood Emissions Label on page 2.**

Readiness Monitor Drive Pattern Application Tables (Continued)

MODEL YEAR	MODEL	ENGINE	DRIVE TRAIN	CATEGORY	DRIVE PATTERN NUMBER*										
					EGR		CATALYST		EVAP				O2S/AF SENSOR		O2S/AF HTR
					1	2	3	4	5	6	7	8	9	10	11
2001	ECHO	1NZ–FE			N/A		X			X			X		X
	Corolla	1ZZ–FE					X			X			X		X
	Celica	1ZZ–FE					X			X			X		X
		2ZZ–GE					X			X			X		X
	MR2	1ZZ–FE					X			X			X		X
	Camry	5S–FE			X			X		X				X	X
		1MZ–FE	MTM		X		X			X			X		X
			ATM		X			X		X				X	X
	Solara	5S–FE			X			X		X				X	X
		1MZ–FE	MTM		X		X			X			X		X
			ATM		X			X		X				X	X
	Camry CNG	5S–FNE			X		N/A		N/A					X	X
	Avalon	1MZ–FE			N/A			X		X				X	X
	Prius	1NZ-FXE					X					X	X		X
	RAV4	1AZ–FE						X		X				X	X
	High-lander	2AZ–FE						X		X				X	X
		1MZ–FE						X		X				X	X
	Sienna	1MZ–FE						X		X				X	X
	Tacoma	2RZ–FE			X			X	X					X	X
		3RZ–FE			X			X	X					X	X
		5VZ–FE	2WD		X			X	X					X	X
			4WD		N/A			X	X					X	X
	4Runner	5VZ–FE						X		X				X	X
	Tundra	5VZ–FE						X	X					X	X
		2UZ–FE					X		X				X		X
	Land Cruiser	2UZ–FE					X		X				X		X
	Sequoia	2UZ–FE					X			X			X		X

*** Readiness Monitor Drive Patterns:**

1. EGR (All Except 1FZ–FE Engine)
2. EGR (For 1FZ–FE Engine)
3. Catalyst (O2S Type)
4. Catalyst (AF Sensor Type)
5. EVAP (Internal Pressure Monitor/Non–Intrusive Type)
6. EVAP (Vacuum Pressure Monitor/Intrusive Type)
7. EVAP (Without Leak Detection)
8. EVAP (For Prius)
9. Oxygen Sensor Monitor (Front & Rear O2S System)
10. Oxygen/AF Sensor Monitor (Front AF Sensor & Rear O2S System)
11. Oxygen/AF Sensor Heater Monitor

Readiness Monitor Drive Pattern Application Tables (Continued)

MODEL YEAR	MODEL	ENGINE	DRIVE TRAIN	CATEGORY	DRIVE PATTERN NUMBER*										
					EGR		CATALYST		EVAP				O2S/AF SENSOR		O2S/AF HTR
					1	2	3	4	5	6	7	8	9	10	11
2002	ECHO	1NZ–FE			N/A		X			X			X		X
	Corolla	1ZZ–FE					X			X			X		X
	Celica	1ZZ–FE					X			X			X		X
		2ZZ–GE					X			X			X		X
	MR2	1ZZ–FE					X			X			X		X
	Camry	2AZ–FE						X		X				X	X
		1MZ–FE	MTM		X		X			X			X		X
			ATM		X			X		X				X	X
	Solara	2AZ–FE			X			X		X				X	X
		1MZ–FE	MTM		X		X			X			X		X
			ATM		X			X		X				X	X
	Camry CNG	5S–FNE			X		N/A		N/A					X	X
	Avalon	1MZ–FE			N/A			X		X				X	X
	Prius	1NZ-FXE					X					X	X		X
	RAV4	1AZ–FE						X		X				X	X
	High-lander	2AZ–FE						X		X				X	X
		1MZ–FE						X		X				X	X
	Sienna	1MZ–FE						X		X				X	X
	Tacoma	2RZ–FE			X			X	X					X	X
		3RZ–FE			X			X	X					X	X
		5VZ–FE			N/A			X	X					X	X
	4Runner	5VZ–FE						X		X				X	X
	Tundra	5VZ–FE						X	X					X	X
		2UZ–FE					X		X				X		X
	Land Cruiser	2UZ–FE					X		X				X		X
	Sequoia	2UZ–FE					X			X			X		X

*** Readiness Monitor Drive Patterns:**

1. EGR (All Except 1FZ–FE Engine)
2. EGR (For 1FZ–FE Engine)
3. Catalyst (O2S Type)
4. Catalyst (AF Sensor Type)
5. EVAP (Internal Pressure Monitor/Non–Intrusive Type)
6. EVAP (Vacuum Pressure Monitor/Intrusive Type)
7. EVAP (Without Leak Detection)
8. EVAP (For Prius)
9. Oxygen Sensor Monitor (Front & Rear O2S System)
10. Oxygen/AF Sensor Monitor (Front AF Sensor & Rear O2S System)
11. Oxygen/AF Sensor Heater Monitor

Readiness Monitor Drive Patterns: EGR Monitors

DRIVE PATTERN NO. 1: EGR Monitor (All Except 1FZ–FE Engine)

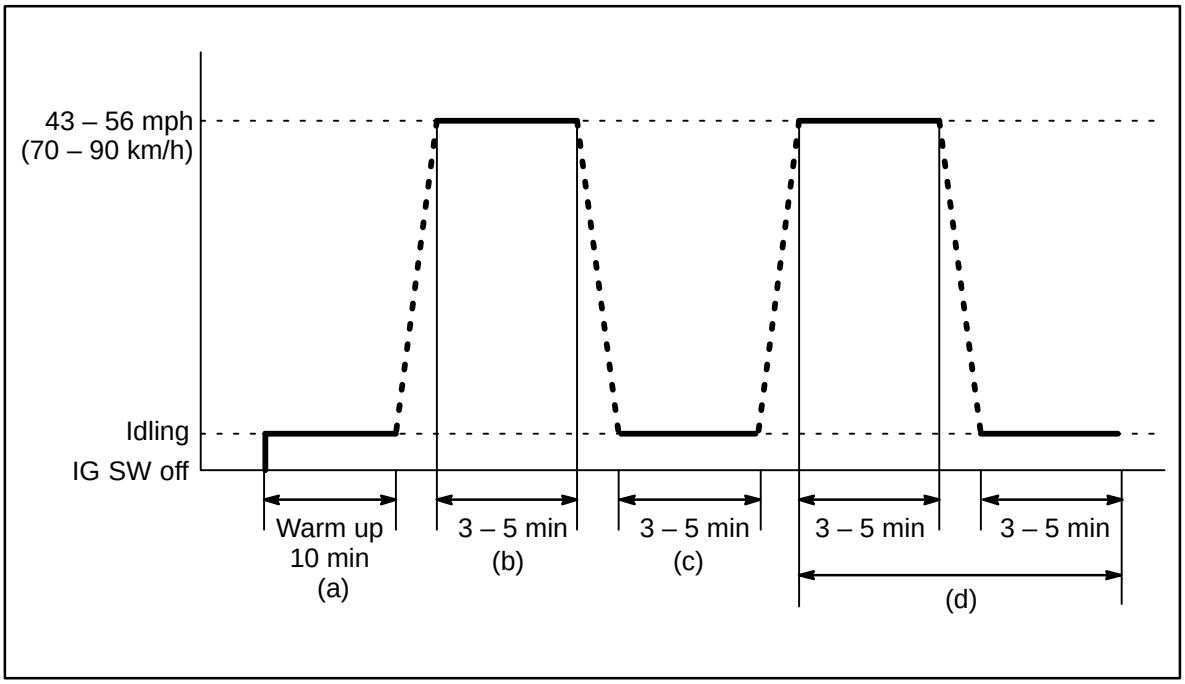

Preconditions

The monitor will not run unless:

- MIL is OFF.
- Altitude is 7800 feet (2400 m) or less.
- IAT (Intake Air) is 14°F (–10°C) or greater.

Drive Pattern Procedure

Connect the OBDII Scantool to the DLC3 connector to check monitor status and preconditions.

a. If IAT (Intake Air) is less than 50°F (10°C) when starting the engine, idle the engine for approximately 10 minutes.
b. Drive the vehicle at 43 – 56 mph (70 – 90 km/h) for a period of 3 – 5 minutes.

NOTE:
- **Do not allow the Throttle Position (TP) to exceed 30%.**
- **Drive with smooth throttle operation and avoid sudden acceleration.**

c. Stop the vehicle and let the engine idle for 3 – 5 minutes.
d. Repeat steps “b” and “c” once.

If readiness status does not switch to “complete,” ensure preconditions are met, turn the ignition OFF, then repeat steps “b” through “d.”

NOTE:

The readiness status may not switch to “complete” after the first drive pattern trip if a Pending Code has been set (first trip for a two–trip DTC).
- **Pending Codes are available from the DTC Info Menu in Enhanced OBDII.**
- **Pending Codes indicate a POTENTIAL problem was detected. A second trip is needed to confirm the DTC prior to diagnosis.**
- **Once a second trip is completed, a current DTC will be stored.**

Readiness Monitor Drive Patterns: EGR Monitors (Continued)

DRIVE PATTERN NO. 2: EGR Monitor (for 1FZ–FE Engine)

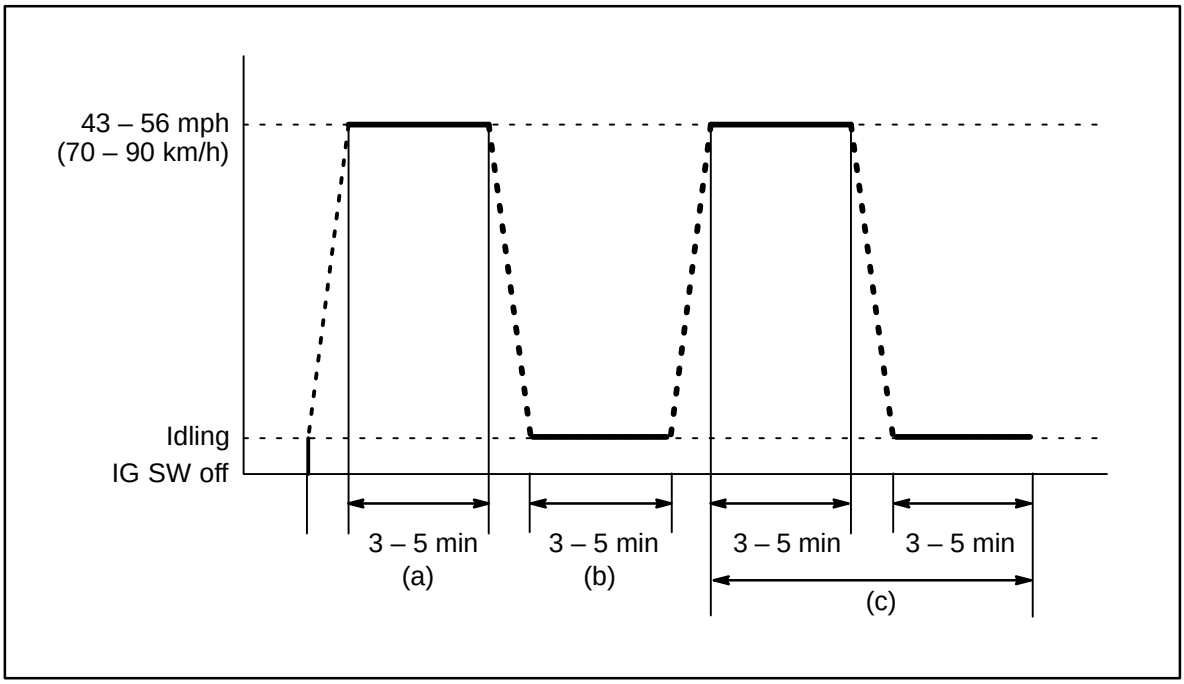

Preconditions

The monitor will not run unless:

- MIL is OFF.
- Altitude is 7800 feet (2400 m) or less.
- IAT (Intake Air) is 14°F (–10°C) or greater.
- ECT (Coolant Temp) is less than 104°F (40°C).

Drive Pattern Procedure

Connect the OBDII Scantool to DLC3 to check monitor status and preconditions.

a. Start the engine and as soon as safely possible begin driving the vehicle at 43 – 56 mph (70 – 90 km/h) for a period of 3 – 5 minutes.

NOTE:
- **Do not allow the Throttle Position (TP) to exceed 30%.**
- **Drive with smooth throttle operation and avoid sudden acceleration.**

b. Stop the vehicle and let the engine idle for 3 – 5 minutes.

c. Repeat steps “a” and “b” once.

If readiness status does not switch to “complete,” ensure preconditions are met, turn the ignition OFF, then repeat steps “a” through “c.”

NOTE:

The readiness status may not switch to “complete” after the first drive pattern trip if a Pending Code has been set (first trip for a two–trip DTC).
- **Pending Codes are available from the DTC Info Menu in Enhanced OBDII.**
- **Pending Codes indicate a POTENTIAL problem was detected. A second trip is needed to confirm the DTC prior to diagnosis.**
- **Once a second trip is completed, a current DTC will be stored.**

Readiness Monitor Drive Patterns: Catalyst Monitors

DRIVE PATTERN NO. 3: Catalyst Monitor (O2S Type)

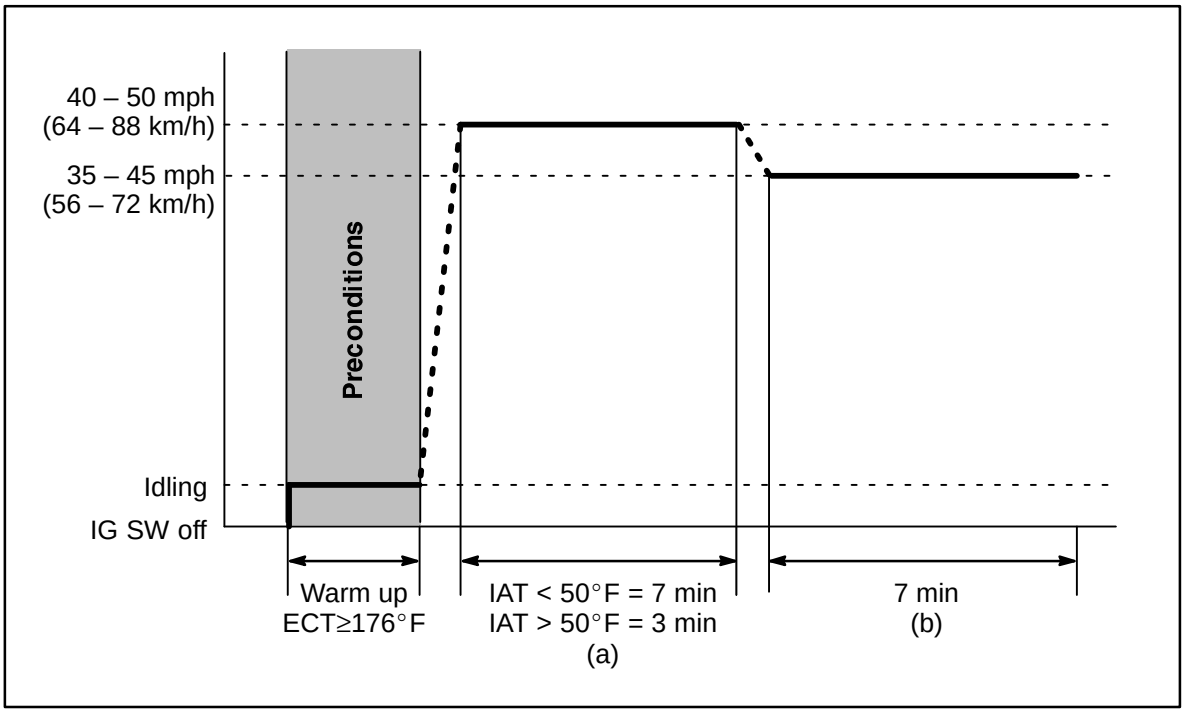

Preconditions

The monitor will not run unless:

- MIL is OFF.
- ECT (Coolant Temp) is 176°F (80°C) or greater.
- IAT (Intake Air) is 14°F (–10°C) or greater.*

*** For 2002 MY and later vehicles:** The readiness test can be completed in cold ambient conditions (less than 14°F / –10°C), if the drive pattern is repeated a second time after cycling the ignition OFF.

Drive Pattern Procedure

Connect the OBDII Scantool to DLC3 to check monitor status and preconditions.

Note the IAT (Intake Air) value during engine startup. The driving time must be adjusted during step “a” based upon IAT (Intake Air) value at startup.

a. Drive the vehicle at 40 – 55 mph (64 – 88 km/h) for the time described below:
   - If IAT (Intake Air) was less than 50°F (10°C) when the engine was started, drive for 7 minutes.
   - If IAT (Intake Air) was greater than 50°F (10°C) when the engine was started, drive for 3 minutes.

b. Drive the vehicle at 35 – 45 mph (56 – 72 km/h) for approximately 7 minutes.

NOTE:
- **Drive with smooth throttle operation.**
- **Avoid sudden acceleration.**
- **Avoid sudden deceleration as much as possible with the throttle fully closed.**

If readiness status does not switch to “complete,” ensure preconditions are met, turn the ignition OFF, then repeat steps “a” and “b.”

NOTE:
The readiness status may not switch to “complete” after the first drive pattern trip if a Pending Code has been set (first trip for a two–trip DTC).
- **Pending Codes are available from the DTC Info Menu in Enhanced OBDII.**
- **Pending Codes indicate a POTENTIAL problem was detected. A second trip is needed to confirm the DTC prior to diagnosis.**
- **Once a second trip is completed, a current DTC will be stored.**

Readiness Monitor Drive Patterns: Catalyst Monitors (Continued)

DRIVE PATTERN NO. 4: Catalyst Monitor (AF Sensor Type)

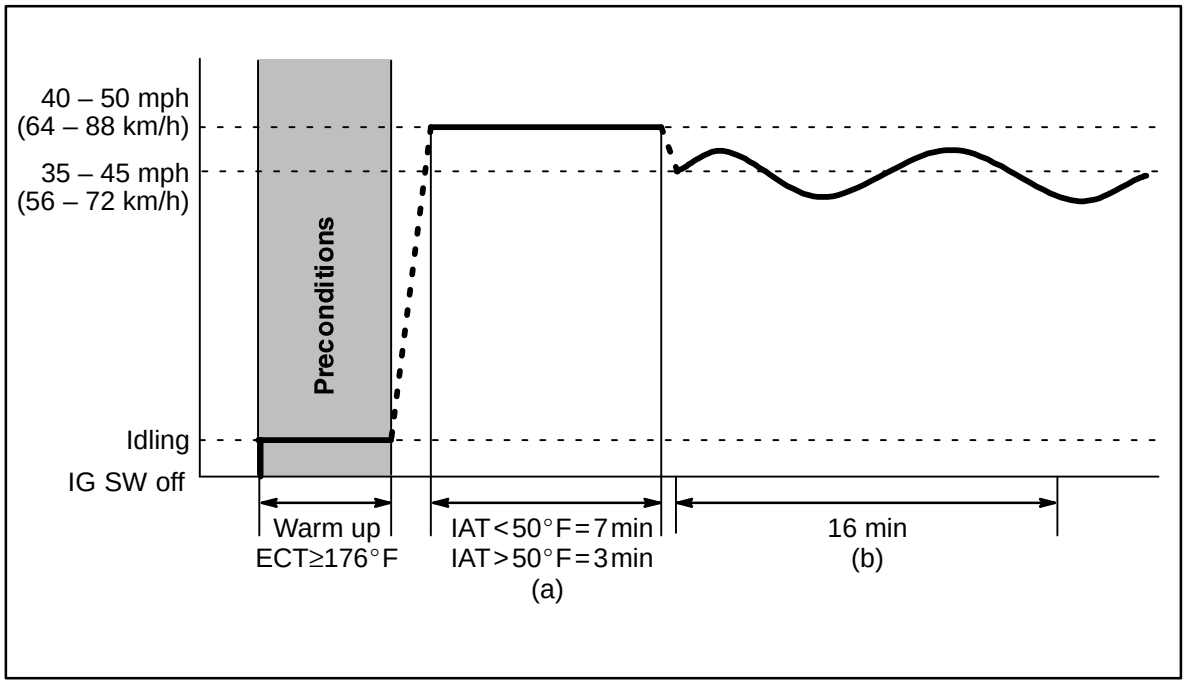

Preconditions

The monitor will not run unless:

- MIL is OFF.
- ECT (Coolant Temp) is 176°F (80°C) or greater.
- IAT (Intake Air) is 14°F (–10°C) or greater.*

*** For 2002 MY and later vehicles:** The readiness test can be completed in cold ambient conditions (less than 14°F / –10°C), if the drive pattern is repeated a second time after cycling the ignition OFF.

Drive Pattern Procedure

Connect the OBDII Scantool to DLC3 to check monitor status and preconditions.

Note the IAT (Intake Air) value during engine startup. The driving time must be adjusted during step “a” based upon IAT (Intake Air) value at startup.

a. Drive the vehicle at 40 – 55 mph (64 – 88 km/h) for the time described below:
   - If IAT (Intake Air) was less than 50°F (10°C) when the engine was started, drive for 7 minutes.
   - If IAT (Intake Air) was greater than 50°F (10°C) when the engine was started, drive for 3 minutes.

b. Drive the vehicle allowing speed to fluctuate between 35 – 45 mph (56 – 72 km/h) for about 16 minutes.

NOTE:
- **Drive with smooth throttle operation.**
- **Avoid sudden acceleration.**
- **Avoid sudden deceleration as much as possible with the throttle fully closed.**

If readiness status does not switch to “complete,” ensure preconditions are met, turn the ignition OFF, then repeat steps “a” and “b.”

NOTE:
The readiness status may not switch to “complete” after the first drive pattern trip if a Pending Code has been set (first trip for a two–trip DTC).
- **Pending Codes are available from the DTC Info Menu in Enhanced OBDII.**
- **Pending Codes indicate a POTENTIAL problem was detected. A second trip is needed to confirm the DTC prior to diagnosis.**
- **Once a second trip is completed, a current DTC will be stored.**

Readiness Monitor Drive Patterns: EVAP Monitors

DRIVE PATTERN NO. 5: EVAP Monitor (Internal Pressure Monitor/Non–Intrusive Type)

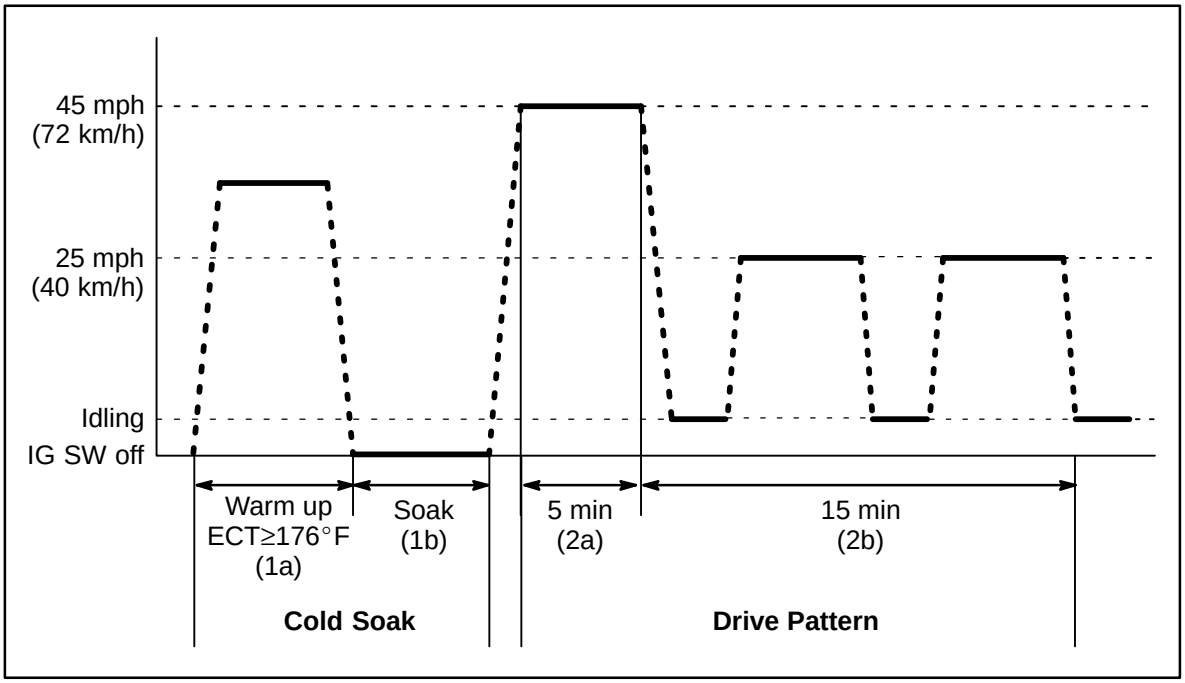

Cold Soak Preconditions

The monitor will not run unless:

- MIL is OFF.
- Fuel level is between 1/2 to 3/4 full (for faster completion).
- Altitude is 7800 feet (2400 m) or less.

IMPORTANT:

A cold soak must be performed prior to conducting the drive pattern to complete the Internal Pressure Readiness Monitor.

Cold Soak Procedure

1a. Start the engine and allow ECT (Coolant Temp) to reach 176°F (80°C) or greater. (This can be done by letting the engine idle or by driving the vehicle.)

1b. Let the vehicle cold soak for 8 hours or until the difference between IAT (Intake Air) and ECT (Coolant Temp) is less than 13°F (7°C).

■ **Example 1**

- ECT (Coolant Temp) = 75°F (24°C).
- IAT (Intake Air) = 60°F (16°C).
- Difference between ECT (Coolant Temp) and IAT (Intake Air) is 15°F (8°C).

  ⇒ The monitor will not run because the difference between ECT (Coolant Temp) and IAT (Intake Air) is greater than 13°F (7°C).

■ **Example 2**

- ECT (Coolant Temp) = 70°F (21°C).
- IAT (Intake Air) = 68°F (20°C).
- Difference between ECT (Coolant Temp) and IAT (Intake Air) is 2°F (1°C).

  ⇒ The monitor will run because the difference between ECT (Coolant Temp) and IAT (Intake Air) is less than 13°F (7°C).

Readiness Monitor Drive Patterns: EVAP Monitors (Continued)

Drive Pattern Preconditions

The monitor will not run unless:

- MIL is OFF.
- Fuel level is between 1/2 to 3/4 full (for faster completion).
- Altitude is 7800 feet (2400 m) or less.
- ECT (Coolant Temp) is between 40°F and 95°F (4.4°C – 35°C).
- IAT (Intake Air) is between 40°F and 95°F (4.4°C – 35°C).
- Cold Soak Procedure has been completed.

NOTE:

Before starting the engine, the difference between ECT (Coolant Temp) and IAT (Intake Air) must be less than 13°F (7°C). (Refer to Examples 1 and 2 on previous page.)

Drive Pattern Procedure

- Connect the OBDII Scantool to DLC3 to check monitor status and preconditions.
- Release the pressure in the fuel tank by removing and then reinstalling the fuel tank cap.
- Start the engine and begin driving as directed.

NOTE:

- **Do not turn the ignition off until the drive pattern is complete.**
- **Drive on smooth roads to reduce excessive fuel sloshing.**

2a. Start the engine and as soon as safely possible begin driving at approximately 45 mph (72km/h) for 5 minutes. (See illustration on previous page.)

2b. Drive the vehicle at approximately 25 mph (40 km/h) for 15 minutes and include a minimum of two stops for approximately 30 seconds. (See illustration on previous page.)

The monitor should complete within approximately 20 minutes. If it does not, ensure preconditions are met and repeat the drive pattern process beginning with the Cold Soak Procedure.

NOTE:

The readiness status may not switch to “complete” after the first drive pattern trip if a Pending Code has been set (first trip for a two–trip DTC).

- **Pending Codes are available from the DTC Info Menu in Enhanced OBDII.**
- **Pending Codes indicate a POTENTIAL problem was detected. A second trip is needed to confirm the DTC prior to diagnosis.**
- **Once a second trip is completed, a current DTC will be stored.**

Readiness Monitor Drive Patterns: EVAP Monitors (Continued)

DRIVE PATTERN NO. 6: EVAP Monitor (Vacuum Pressure Monitor/Intrusive Type)

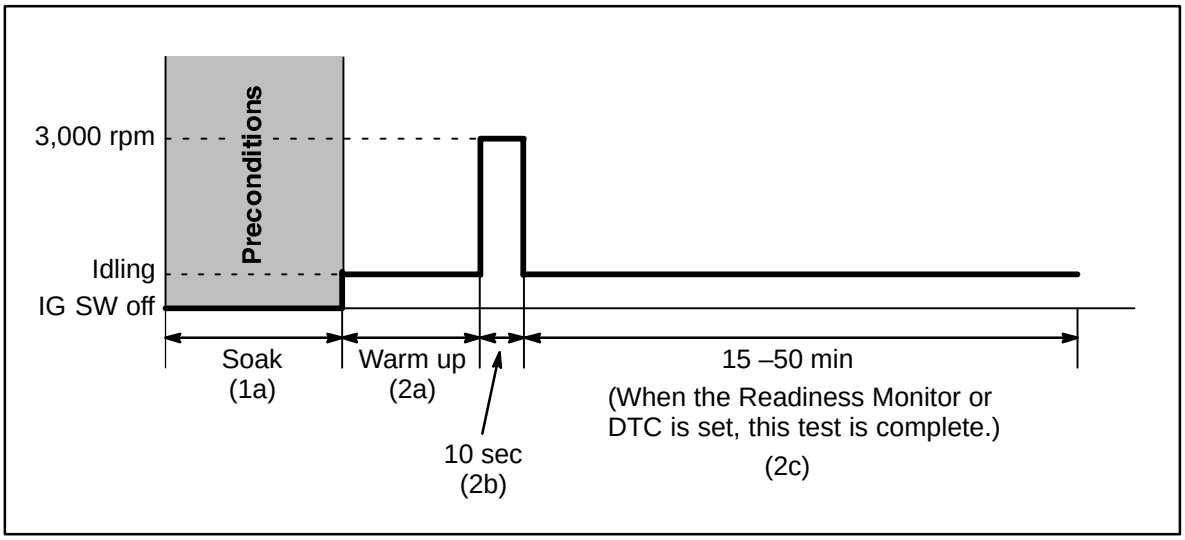

Cold Soak Preconditions

The monitor will not run unless:

- MIL is OFF.
- Fuel level is between 1/2 to 3/4 full (for faster completion).
- Altitude is 7800 feet (2400 m) or less.

Cold Soak Procedure

1a. Let the vehicle cold soak for 8 hours or until the difference between IAT (Intake Air) and ECT (Coolant Temp) is less than 13°F (7°C).

■ **Example 1**

- ECT (Coolant Temp) = 75°F (24°C).
- IAT (Intake Air) = 60°F (16°C).
- Difference between ECT (Coolant Temp) and IAT (Intake Air) is 15°F (8°C).

⇒ The monitor will not run because the difference between ECT (Coolant Temp) and IAT (Intake Air) is greater than 13°F (7°C).

■ **Example 2**

- ECT (Coolant Temp) = 70°F (21°C).
- IAT (Intake Air) = 68°F (20°C).
- Difference between ECT (Coolant Temp) and IAT (Intake Air) is 2°F (1°C).

⇒ The monitor will run because the difference between ECT (Coolant Temp) and IAT (Intake Air) is less than 13°F (7°C).

Readiness Monitor Drive Patterns: EVAP Monitors (Continued)

Drive Pattern Preconditions

The monitor will not run unless:

- MIL is OFF.
- Fuel level is between 1/2 to 3/4 full (for faster completion).
- Altitude is 7800 feet (2400 m) or less.*
- ECT (Coolant Temp) is between 40°F and 95°F (4.4°C – 35°C).
- IAT (Intake Air) is between 40°F and 95°F (4.4°C – 35°C).*
- Cold Soak Procedure has been completed.

*** For 2002 MY and later vehicles:** The readiness test can be completed in cold ambient conditions (less than 40°F / 4.4°C) and/or at high altitudes (more than 7800 feet / 2400 m) if the complete drive pattern (including Cold Soak) is repeated a second time after cycling the ignition OFF.

NOTE:

Before starting the engine, the difference between ECT (Coolant Temp) and IAT (Intake Air) must be less than 13°F (7°C). (Refer to Examples 1 and 2 on previous page.)

Drive Pattern Procedure

- Connect the OBDII Scantool to DLC3 to check monitor status and preconditions.
- Release the pressure in the fuel tank by removing and then reinstalling the fuel tank cap.

2a. Start the engine and allow it to idle until ECT (Coolant Temp) is 167°F (75°C) or greater. (See illustration on previous page.)

2b. Race the engine at 3,000 rpm for approximately 10 seconds. (See illustration on previous page.)

2c. Allow the engine to idle with the A/C ON (to create a slight load) for 15 – 50 minutes. (See illustration on previous page.)

NOTE:

If the vehicle is not equipped with A/C put a slight load on the engine by doing the following:

- **Securely set the parking brake.**
- **Block the drive wheels with wheel chocks.**
- **Allow the vehicle to idle in drive for 15 – 50 minutes.**

NOTE:

The readiness status may not switch to “complete” after the first drive pattern trip if a Pending Code has been set (first trip for a two–trip DTC).

- **Pending Codes are available from the DTC Info Menu in Enhanced OBDII.**
- **Pending Codes indicate a POTENTIAL problem was detected. A second trip is needed to confirm the DTC prior to diagnosis.**
- **Once a second trip is completed, a current DTC will be stored.**

Readiness Monitor Drive Patterns: EVAP Monitors (Continued)

DRIVE PATTERN NO. 7: EVAP Monitor (Without Leak Detection)

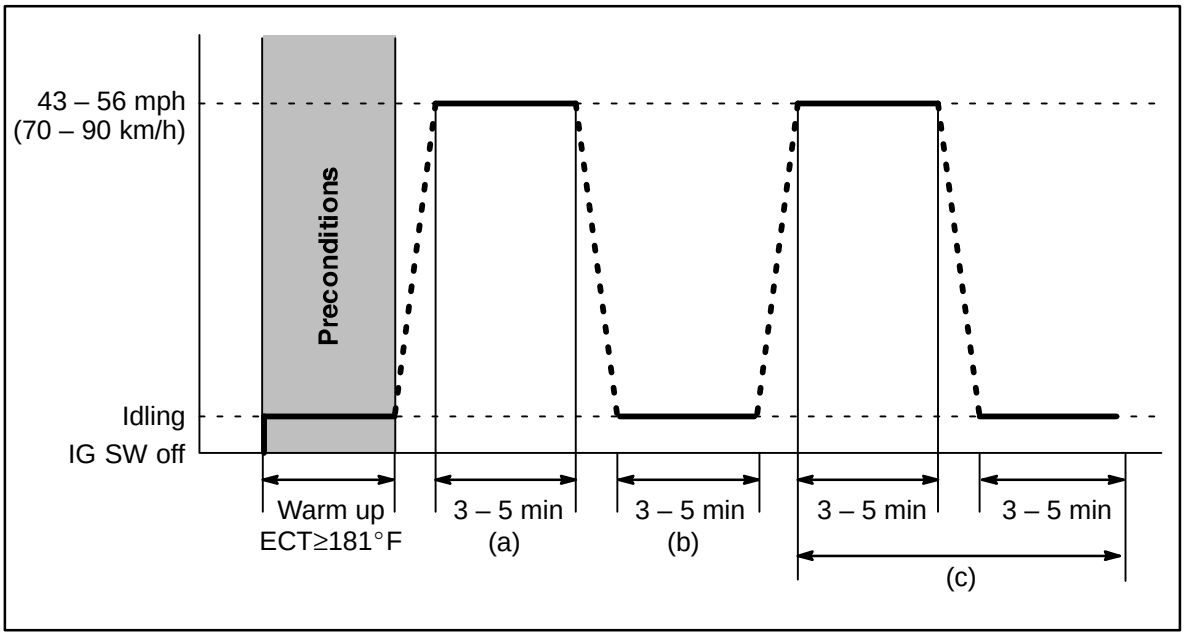

Preconditions

The monitor will not run unless:

- MIL is OFF.
- Altitude is 7800 feet (2400 m) or less.
- ECT (Coolant Temp) is 181°F (83°C) or greater.
- IAT (Intake Air) is 41°F (5°C) or greater.

Drive Pattern Procedure

Connect the OBDII Scantool to DLC3 to check monitor status and preconditions.

a. Drive the vehicle at 43 – 56 mph (70 – 90 km/h) for a period of 3 – 5 minutes.

NOTE:
- **Do not allow the Throttle Position (TP) to exceed 30%.**
- **Drive with smooth throttle operation and avoid sudden acceleration.**

b. Stop the vehicle and let the engine idle for 3 – 5 minutes.

c. Repeat steps “a” and “b” once.

If readiness status does not switch to “complete,” ensure preconditions are met, turn the ignition OFF, then repeat steps “a” through “c.”

NOTE:
The readiness status may not switch to “complete” after the first drive pattern trip if a Pending Code has been set (first trip for a two–trip DTC).
- **Pending Codes are available from the DTC Info Menu in Enhanced OBDII.**
- **Pending Codes indicate a POTENTIAL problem was detected. A second trip is needed to confirm the DTC prior to diagnosis.**
- **Once a second trip is completed, a current DTC will be stored.**

Readiness Monitor Drive Patterns: EVAP Monitors (Continued)

DRIVE PATTERN NO. 8: EVAP Monitor (For Prius)

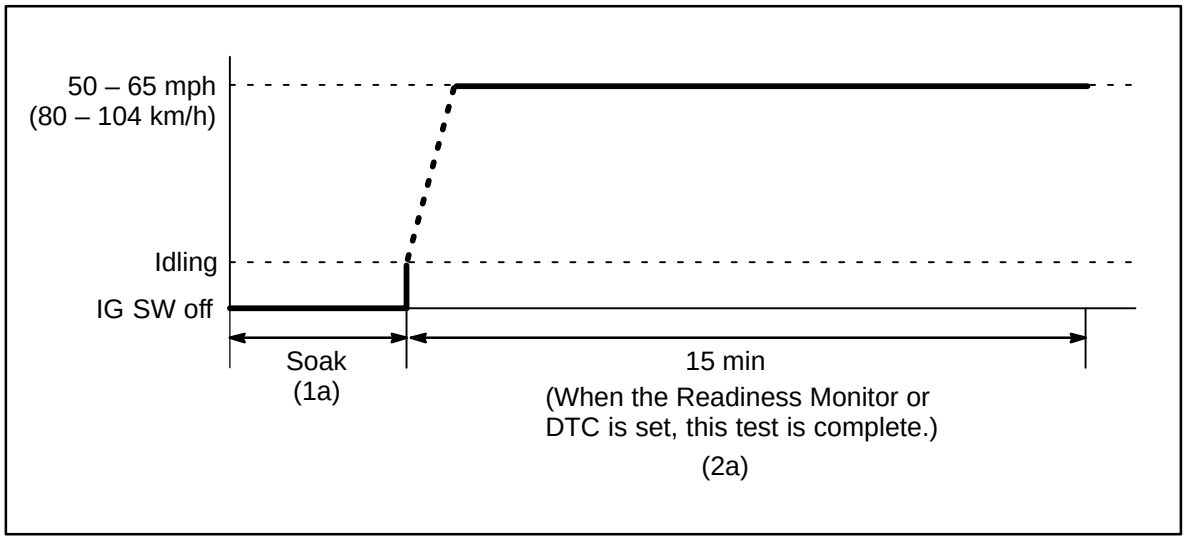

Cold Soak Preconditions

The monitor will not run unless:

- MIL is OFF.
- Altitude is 7800 feet (2400 m) or less.

IMPORTANT:

A cold soak must be performed prior to conducting the drive pattern to complete the Internal Pressure Readiness Monitor.

Cold Soak Procedure

1a. Let the vehicle cold soak for 8 hours or until the difference between IAT (Intake Air) and ECT (Coolant Temp) is less than 13°F (7°C).

■ **Example 1**

- ECT (Coolant Temp) = 75°F (24°C).
- IAT (Intake Air) = 60°F (16°C).
- Difference between ECT (Coolant Temp) and IAT (Intake Air) is 15°F (8°C).

  ⇒ The monitor will not run because the difference between ECT (Coolant Temp) and IAT (Intake Air) is greater than 13°F (7°C).

■ **Example 2**

- ECT (Coolant Temp) = 70°F (21°C).
- IAT (Intake Air) = 68°F (20°C).
- Difference between ECT (Coolant Temp) and IAT (Intake Air) is 2°F (1°C).

  ⇒ The monitor will run because the difference between ECT (Coolant Temp) and IAT (Intake Air) is less than 13°F (7°C).

Readiness Monitor Drive Patterns: EVAP Monitors (Continued)

Drive Pattern Preconditions

The monitor will not run unless:

- MIL is OFF.
- Altitude is 7800 feet (2400 m) or less.
- ECT (Coolant Temp) is between 40°F and 95°F (4.4°C – 35°C).
- IAT (Intake Air) is between 40°F and 95°F (4.4°C – 35°C).*
- Cold Soak Procedure has been completed.

NOTE:

Before starting the engine, the difference between ECT (Coolant Temp) and IAT (Intake Air) must be less than 13°F (7°C). (Refer to Examples 1 and 2 on previous page.)

Drive Pattern Procedure

- Connect the OBDII Scantool to DLC3 to check monitor status and preconditions.
- Release the pressure in the fuel tank by removing and then reinstalling the fuel tank cap.
- Start the engine and as soon as safely possible begin driving as directed.

2a. Drive the vehicle at 50 – 65 mph (80 – 104 km/h) for about 15 minutes. (See illustration on previous page.)

NOTE:

- **Do not turn the ignition off until the drive pattern is complete.**
- **Drive on smooth roads to reduce excessive fuel sloshing.**

If vehicle speed drops under 45 mph (72 km/h) repeat step “2a.”

Readiness Monitor Drive Patterns: Oxygen Monitors

DRIVE PATTERN NO. 9: Oxygen Sensor Monitor (Front and Rear O2S System)

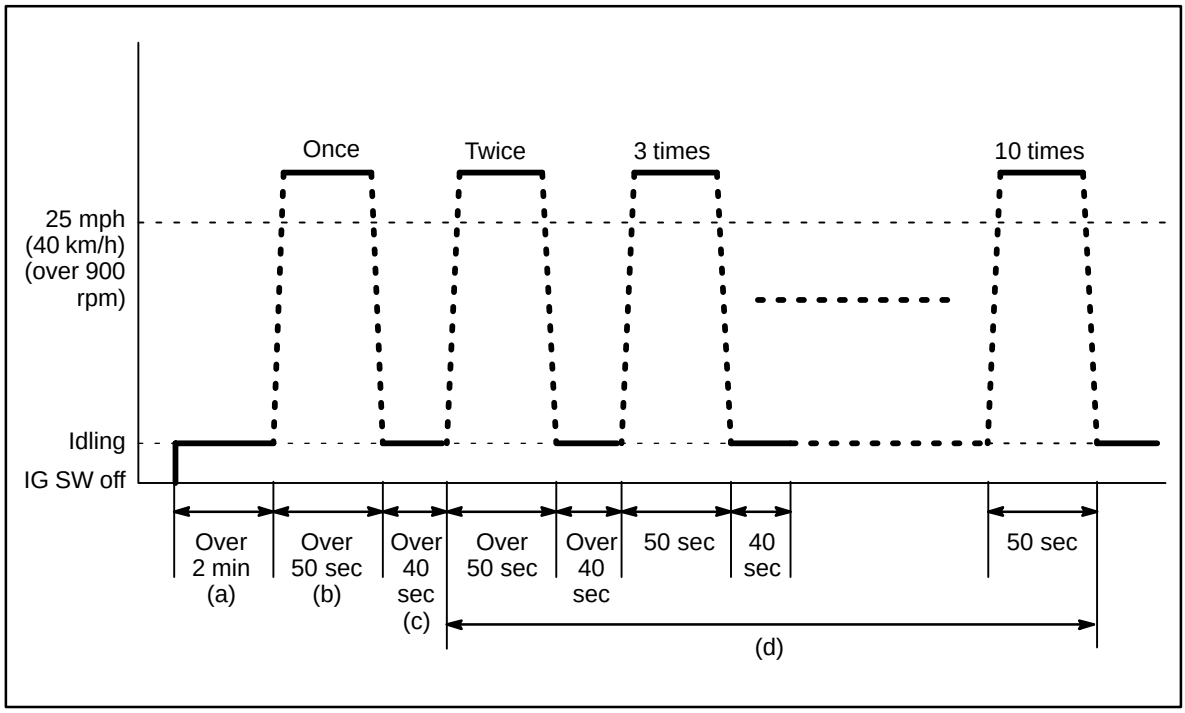

Preconditions

The monitor will not run unless:

- MIL is OFF.

Drive Pattern Procedure

Connect the OBDII Scantool to DLC3 to check monitor status and preconditions.

a. Start the engine and allow it to idle for 2 minutes or more.

b. Drive the vehicle at 25 mph (40 km/h) or more for at least 50 seconds. Be sure engine speed remains above 900 rpm.

c. Stop the vehicle and allow the engine to idle for 40 seconds or more.

d. Perform steps “b” and “c” ten times.

If readiness status does not switch to “complete,” ensure preconditions are met, turn the ignition OFF, then repeat steps “a” through “d.”

NOTE:

The readiness status may not switch to “complete” after the first drive pattern trip if a Pending Code has been set (first trip for a two–trip DTC).

- **Pending Codes are available from the DTC Info Menu in Enhanced OBDII.**
- **Pending Codes indicate a POTENTIAL problem was detected. A second trip is needed to confirm the DTC prior to diagnosis.**
- **Once a second trip is completed, a current DTC will be stored.**

Readiness Monitor Drive Patterns: Oxygen Monitors (Continued)

DRIVE PATTERN NO. 10: Oxygen/Air Fuel Ratio Sensor Monitor (Front AF Sensor and Rear O2S System)

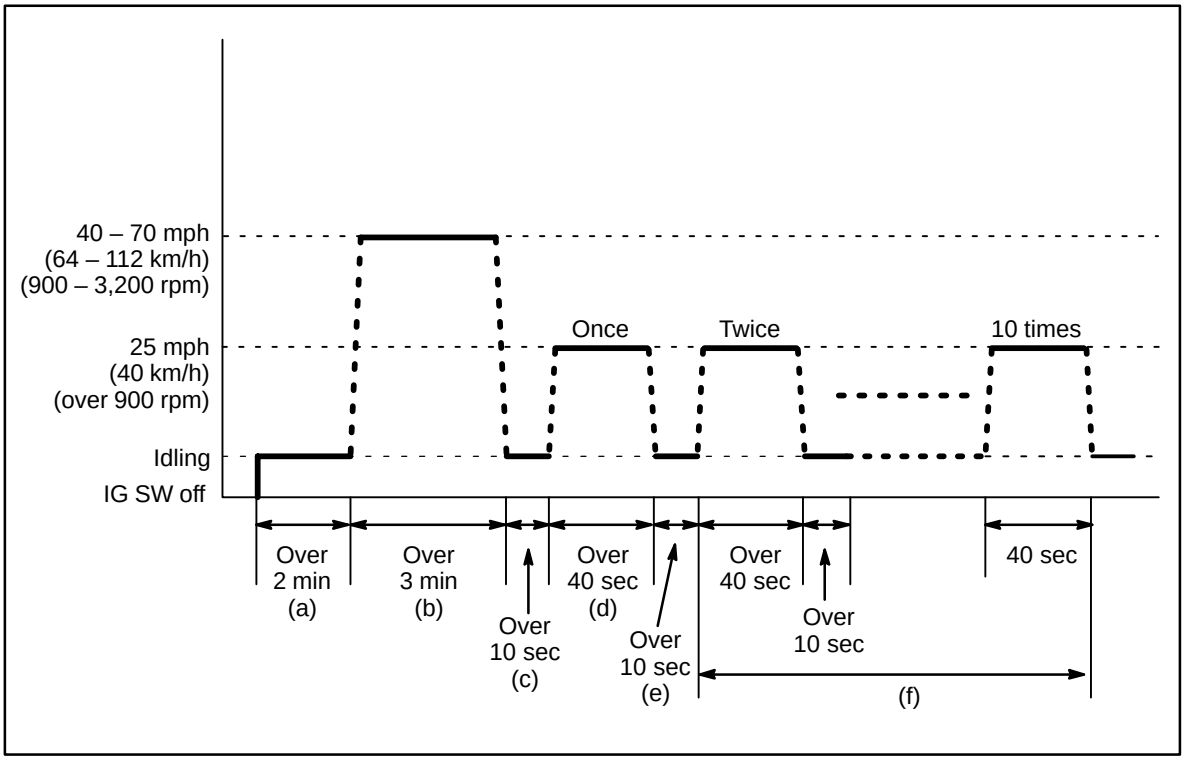

Preconditions

The monitor will not run unless:

- MIL is OFF.

Drive Pattern Procedure

Connect the OBDII Scantool to DLC3 to check monitor status and preconditions.

a. Start the engine and allow it to idle for 2 minutes or more.

b. Drive the vehicle at 40 – 70 mph (64 – 112 km/h) or more for at least 3 minutes. Be sure to maintain engine speed between 900 and 3,200 rpm.

c. Stop the vehicle and allow the engine to idle for 10 seconds or more.

d. Drive the vehicle at 25 mph (40 km/h) for at least 40 seconds or more. Be sure to maintain engine speed above 900 rpm.

e. Stop the vehicle and allow the engine to idle for 10 seconds or more.

f. Perform steps “d” and “e” ten times.

If readiness status does not switch to “complete,” ensure preconditions are met, turn the ignition switch OFF, then repeat steps “a” through “f.”

NOTE:

The readiness status may not switch to “complete” after the first drive pattern trip if a Pending Code has been set (first trip for a two–trip DTC).

- **Pending Codes are available from the DTC Info Menu in Enhanced OBDII.**
- **Pending Codes indicate a POTENTIAL problem was detected. A second trip is needed to confirm the DTC prior to diagnosis.**
- **Once a second trip is completed, a current DTC will be stored.**

Readiness Monitor Drive Patterns: Oxygen Monitors (Continued)

DRIVE PATTERN NO. 11: Oxygen/AF Sensor Heater Monitor

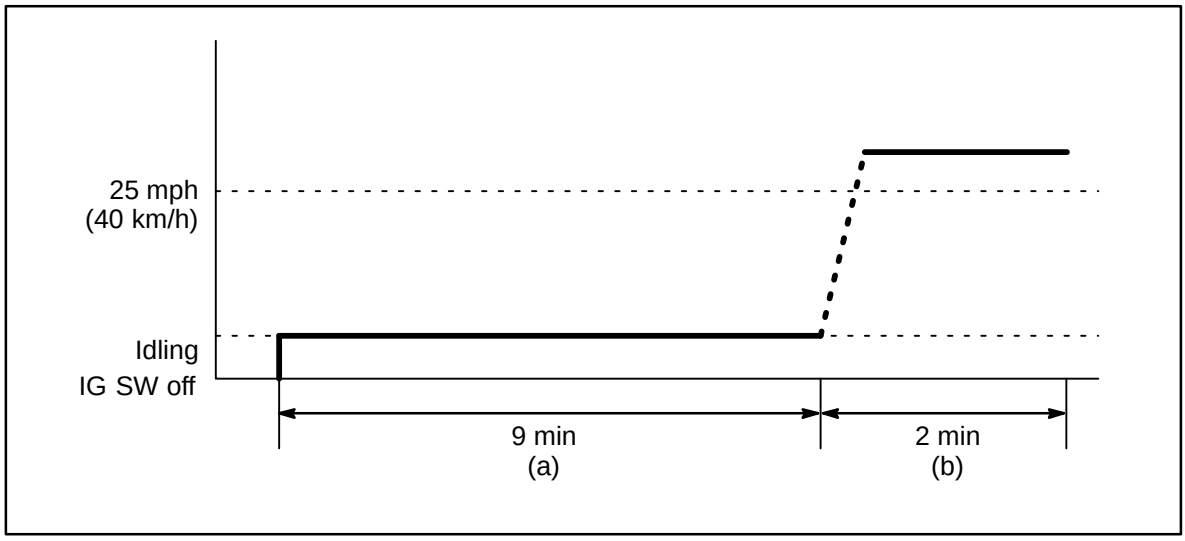

Preconditions

The monitor will not run unless:

- MIL is OFF.

Drive Pattern Procedure

Connect the OBDII Scantool to DLC3 to check monitor status and preconditions.

a. Start the engine and allow it to idle for 9 minutes.

b. Drive the vehicle at 25 mph (40 km/h) or more for at least 2 minutes.

If readiness status does not switch to “complete,” ensure preconditions are met, turn the ignition OFF, then repeat steps “a” and “b.”

NOTE:

The readiness status may not switch to “complete” after the first drive pattern trip if a Pending Code has been set (first trip for a two–trip DTC).

- **Pending Codes are available from the DTC Info Menu in Enhanced OBDII.**
- **Pending Codes indicate a POTENTIAL problem was detected. A second trip is needed to confirm the DTC prior to diagnosis.**
- **Once a second trip is completed, a current DTC will be stored.**

TOYOTA

Technical Service BULLETIN

April 27, 2001

Title:

EVAP SYSTEM OPERATION INFORMATION

Models:

All '96 – '01 Models

TSB

Introduction

This service bulletin provides supplemental information regarding the system design, operation, and diagnostics of the Early Type (Non–Intrusive) and Late Type (Intrusive) EVAP Systems found on 1996 model year and later OBD II equipped vehicles.

Applicable Vehicles

MODEL	1996	1997	1998	1999	2000	2001
Avalon	Early	Early	Early	Early	Late	Late
Camry	Early (A/T only)	Early	Early	Early	Late	Late
Camry Solara	N/A	N/A	N/A	Early	Late	Late
Celica	N/A	N/A	Early	Early	Late	Late
Corolla	N/A	N/A	Early	Early	Late	Late
ECHO	N/A	N/A	N/A	N/A	Late	Late
MR2	N/A	N/A	N/A	N/A	Late	Late
Prius	N/A	N/A	N/A	N/A	Late	Late
Tercel	N/A	Early	Early	Early	N/A	N/A
4Runner	Early	Early	Early	Early	Early	Late
Land Cruiser	N/A	N/A	Early	Early	Early	Early
RAV4	Early	Early	Early	Early	Early	Late
Sequoia	N/A	N/A	N/A	N/A	N/A	Late
Sienna	N/A	N/A	Early	Early	Early	Late
Tacoma	Early (4WD only)	Early	Early	Early	Early	Early
Tundra	N/A	N/A	N/A	N/A	Early	Early
T100	N/A	Early	Early	N/A	N/A	N/A

Contents

This bulletin is divided into the following sections:

Early Type and Late Type EVAP System Outline

1. **Early Type Description ..... Pages 2–4**
2. **Late Type Description ..... Pages 4–6**
3. **ECHO Late Type Description ..... Page 6**
4. **Late Type System Monitor Sequence ..... Pages 6–9**

Diagnostic Tips For Late Type EVAP System ..... Pages 10–14

Warranty Information

OP CODE	DESCRIPTION	TIME	OPN	T1	T2
N/A	Not Applicable to Warranty	–	–	–	–

Early Type System Description

Early Type (Non–Intrusive) EVAP System Overview

There are a variety of EVAP systems in use with different monitoring strategies. It is essential that the EVAP system be correctly identified before beginning diagnosis. The Repair Manual is the best source for this information. The following information covers the different systems.

The first system described is the Early Type (Non–Intrusive) EVAP System. Refer to the Applicable Vehicles chart for applicability information.

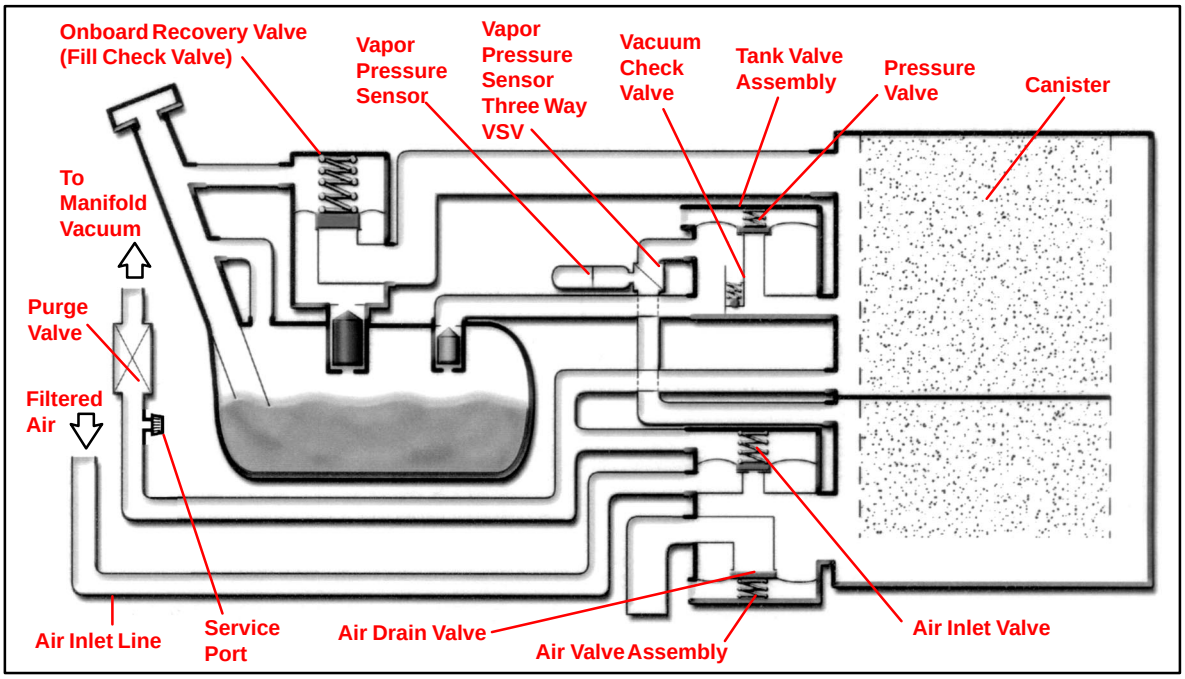

Purge Operation

When the engine has reached predetermined parameters (closed loop, engine temp. above 125°F, etc.), stored fuel vapors are purged from the canister whenever the purge VSV is opened by the ECM. At the appropriate time, the ECM will turn on the purge VSV.

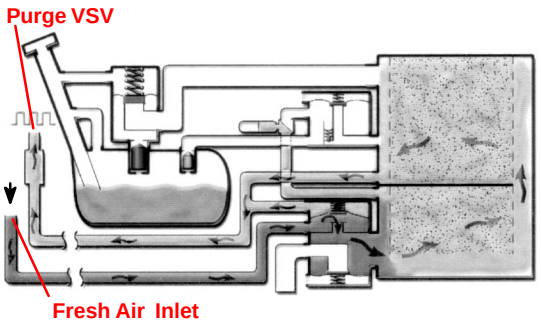

Figure 1. Purge Operation

The ECM will change the duty ratio cycle of the purge VSV thus controlling purge flow volume. Purge flow volume is determined by manifold pressure and the duty ratio cycle of the purge VSV. Atmospheric pressure is allowed into the canister to ensure that purge flow is constantly maintained whenever purge vacuum is applied to the canister (see Figure 1).

Early Type System Description (Continued)

ORVR Operation

During refueling, low pressure above the diaphragm in the onboard recovery valve lifts allowing fuel vapors into the charcoal canister. At the same time, the air drain valve opens and the charcoal absorbs the fuel vapors (see Figure 2).

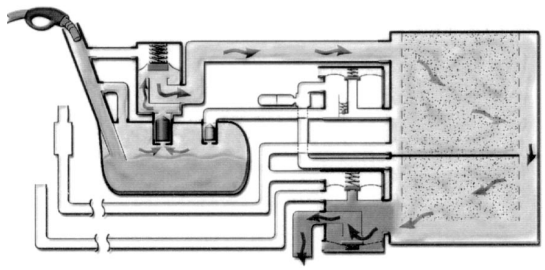

Figure 2. ORVR Operation

Early Type (Non–Intrusive) EVAP System DTCs

EVAP Monitor Leak Operation P0440

The ECM tests for leaks by measuring EVAP system pressure in the lines, charcoal canister, and fuel tank. When the EVAP pressure is higher or lower than atmospheric pressure, the ECM concludes that no leaks are present. EVAP pressure is measured by the vapor pressure sensor. If either the tank or canister purge side is at atmospheric pressure under specific conditions, the ECM determines there is a leak.

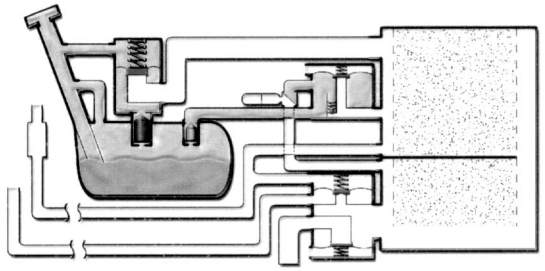

Figure 3. Fuel Tank Side of System

If DTC P0440 is present, the leak is on the fuel tank side of the EVAP system. This also includes the lines between the fuel tank and part of the canister. When the Vapor Pressure sensor is measuring tank pressure, the ECM is observing changes in pressure and comparing tank pressure to atmospheric pressure. No difference in pressure indicates a leak. The ECM may take 20 minutes or more to complete testing the fuel tank side (see Figure 3).

Canister Leak Detection P0446

When the ECM switches the vapor pressure VSV to canister side, the ECM measures canister pressure. A leak on the canister side can set multiple DTCs (see Figure 4).

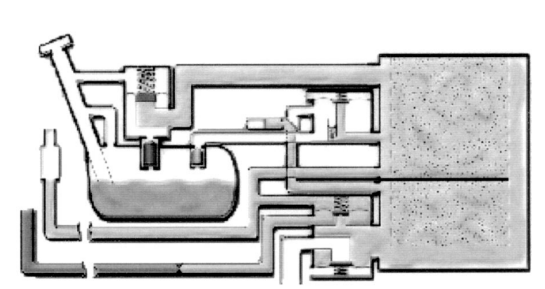

Figure 4. Canister Side of System

Early Type System Description (Continued)

Vapor Purge Flow P0441

The EVAP monitor is designed to detect:

- Restricted vapor purge flow when the purge VSV is open
- Inappropriate vapor purge flow when the purge VSV is closed

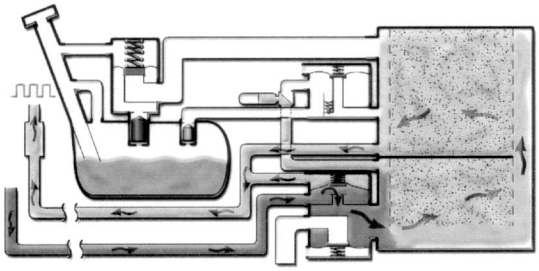

Figure 5. Flow During Purge Operation

Under normal purge conditions, pressure pulsations generated by the cycling of the purge VSV are present in the canister and detected by the Vapor Pressure sensor.

Three–Way VSV P0446

The three–way VSV is connected to the Vapor Pressure sensor, canister, and fuel tank. This VSV allows the Vapor Pressure sensor to detect either canister or tank pressure.

There are two modes the ECM can use to determine if the three–way VSV is malfunctioning. The three–way VSV is judged to be normal if there is pressure difference between the tank and canister when the three–way VSV is switched to look at the charcoal canister and fuel tank side of system.

If there isn't any pressure difference between the fuel tank and canister, the ECM looks for the following conditions:

- During purging, pressure pulsations generated by the purge VSV are not present in the canister as detected by Vapor Pressure sensor, the three–way VSV is judged to be defective.
- If there are pressure pulsations detected by the Vapor Pressure sensor present in the fuel tank, the three–way VSV is judged to be defective.

Late Type System Description

Late Type (Intrusive) EVAP System Overview

The Late Type EVAP System, also known as the Intrusive type, was developed to meet the very stringent, mandated standard of detecting a hole 0.020 inch (0.5 mm). This system uses many of the same components as the early type EVAP system. Purge, vacuum relief, pressure relief, and ORVR operations are identical to the early type. Refer to the Applicable Vehicles chart for applicability information.

The following changes were made to the Late Type EVAP System:

- Vapor pressure sensor connected to the fuel tank.
- Bypass VSV in the place of the three way VSV.
- Canister Closed Valve (CCV) on the air inlet line.

Late Type System Description (Continued)

Late Type (Intrusive EVAP System) (Except ECHO)

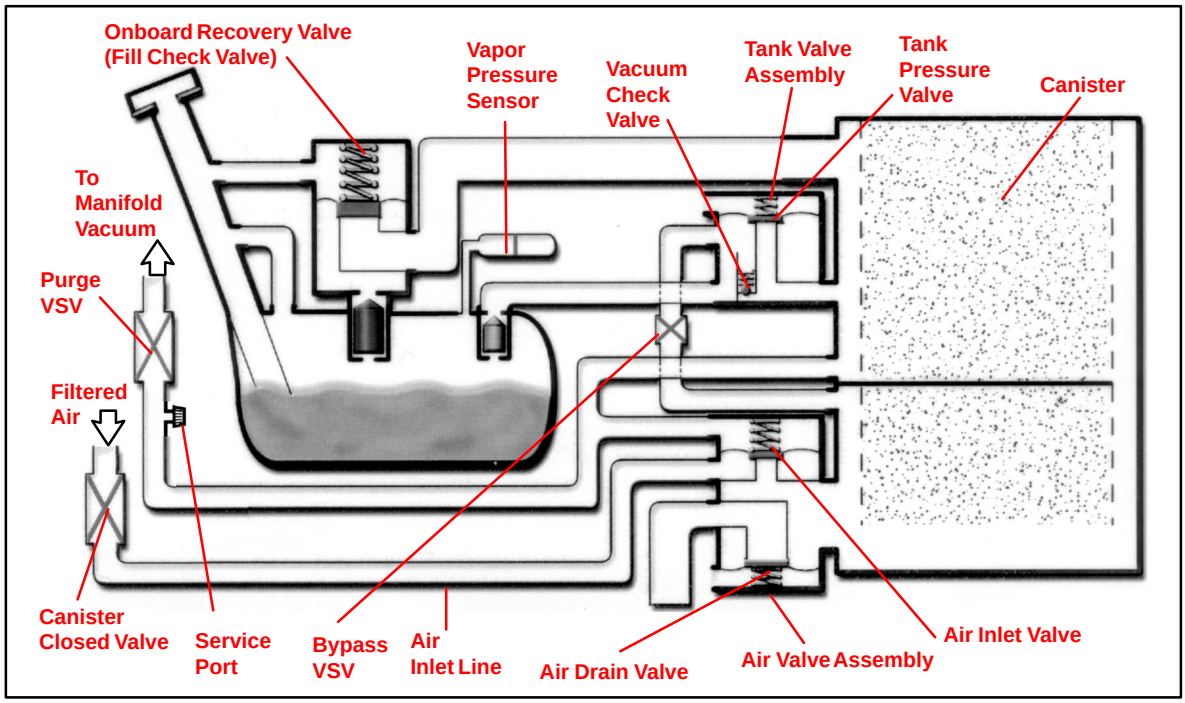

Tank Side

The bypass VSV and the fill check valve assembly isolates the tank pressure side from the canister side (see Figure 1).

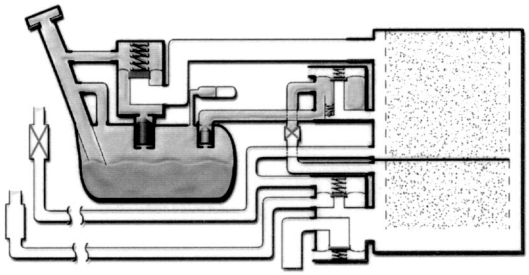

Figure 1. Fuel Tank Side of System

Canister Side

The bypass VSV and the Fill Check valve also isolate the canister side from the tank side (see Figure 2).

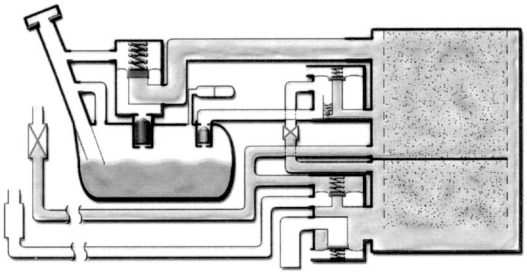

Figure 2. Canister Side of System

Late Type System Description (Continued)

ECHO Late Type (Intrusive EVAP System)

The ECHO uses a Late Type EVAP System but is configured with some small differences. For the ECHO, the Canister Closed Valve is located directly on the canister. Additionally, the bypass VSV has been eliminated.

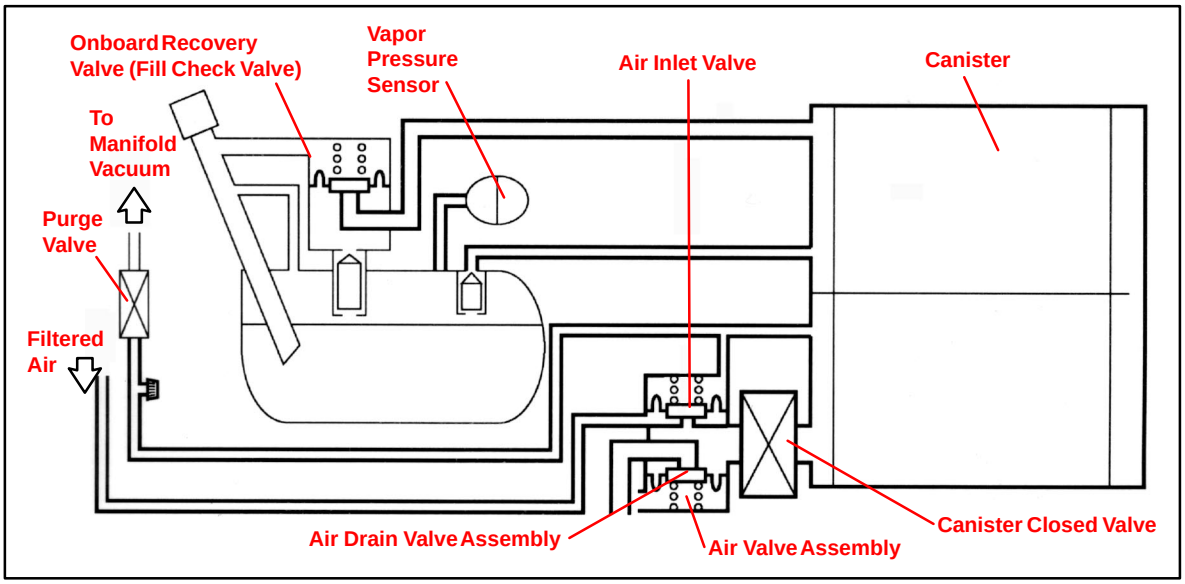

Late Type System Monitor Sequence

Late Type (Intrusive) EVAP System Monitor Sequence

The monitoring sequence for leak detection is different from that of the Early Type EVAP System. The Late Type applies a very small vacuum to the EVAP system. The ECM then determines if there is a problem in the system based on the vapor pressure sensor signal.

Monitor Sequence (Except ECHO)

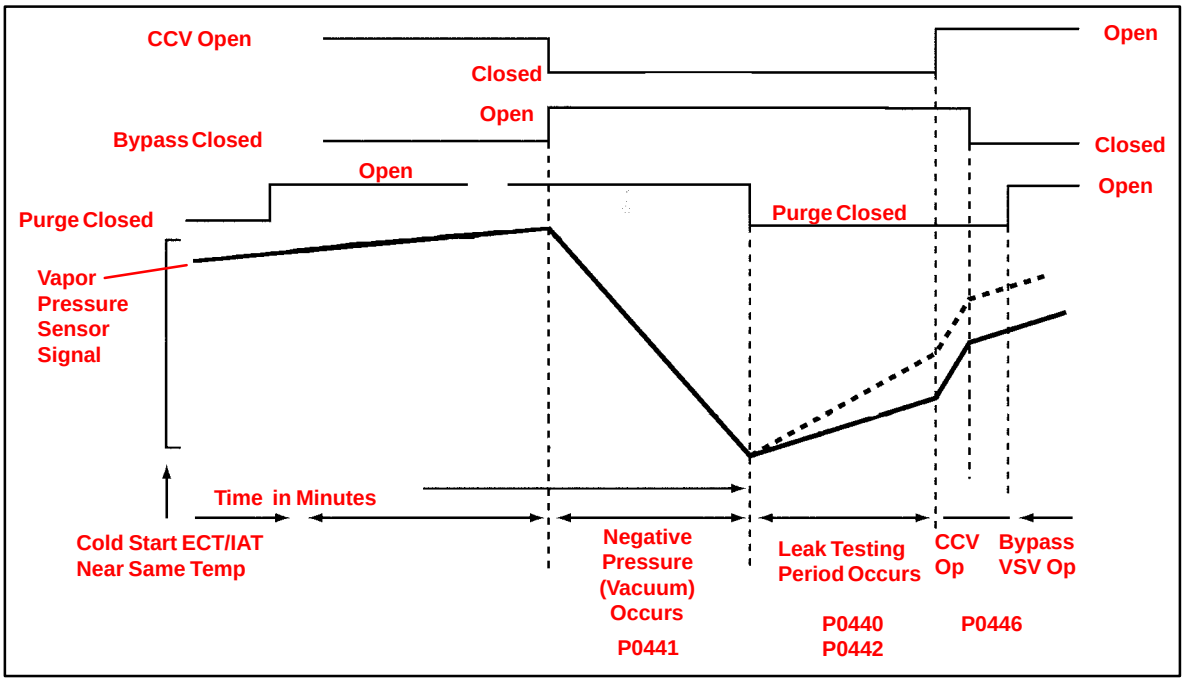

Late Type System Monitor Sequence (Continued)

ECHO Monitor Sequence

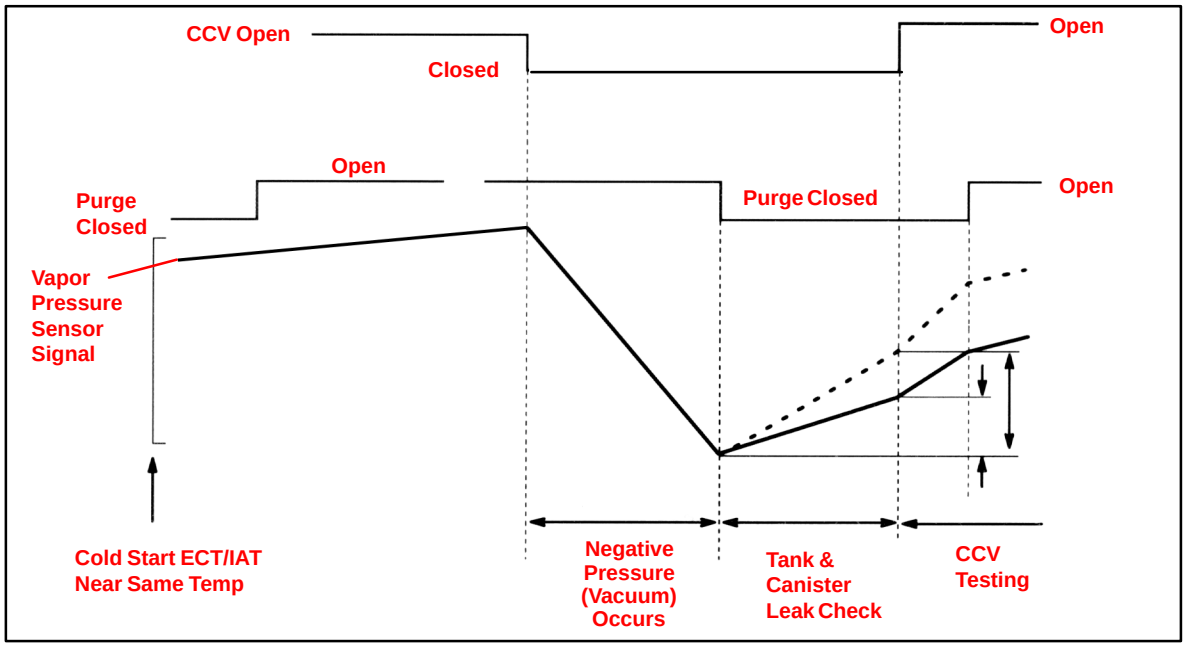

Monitor Operation

The monitor sequence begins with a cold engine start. The IAT and ECT sensors must have approximately the same temperature reading.

The ECM is constantly monitoring fuel tank pressure. As the temperature of the fuel increases, pressure slowly rises.

Except ECHO

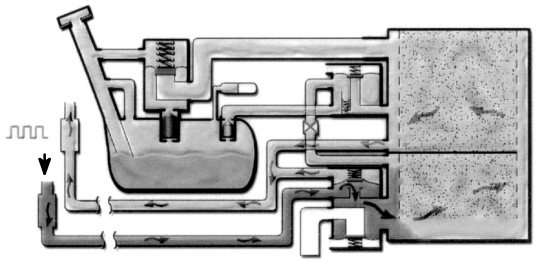

Figure 1. Canister Purge

The ECM will purge the charcoal canister at the appropriate time (see Figure 1). With bypass VSV closed, pressure will continue to rise in fuel tank.

ECHO

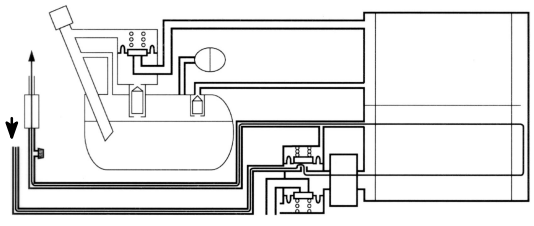

Figure 1. Canister Purge

Late Type System Monitor Sequence (Continued)

Purge VSV Operation – P0441

At a predetermined point, the ECM closes the CCV and opens the bypass VSV causing vacuum to increase in the entire EVAP system.

The ECM continues to operate the purge VSV until the vacuum is increased to a specified point at which time the ECM closes the purge VSV (see Figure 2).

If the vacuum did not increase, or if the vacuum increased beyond the specified limit, the ECM judges the purge VSV and related components to be faulty.

Except ECHO

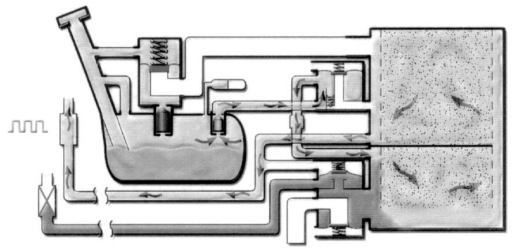

Figure 2. Vacuum Application

ECHO

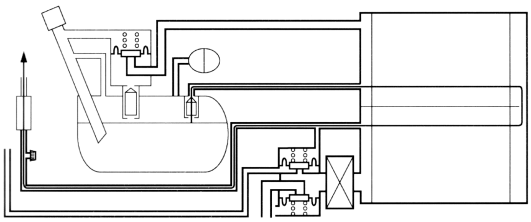

Figure 2. Vacuum Application

Hole Detection P0440 and P0442

The rate of pressure increase as detected by the vapor pressure signal indicates the if there is a leak and if it is a large or small leak.

After purge VSV operation, the purge VSV is turned off sealing the vacuum in the system and the ECM begins to monitor the pressure increase (see Figure 3). Some increase is normal. A very rapid, sharp increase in pressure indicates a leak in the EVAP system and sets the DTC P0440.

This monitoring method is also able to distinguish what is called the small leak detection. A pressure rise just above normal indicates a very small hole and will set the DTC P0442.

Except ECHO

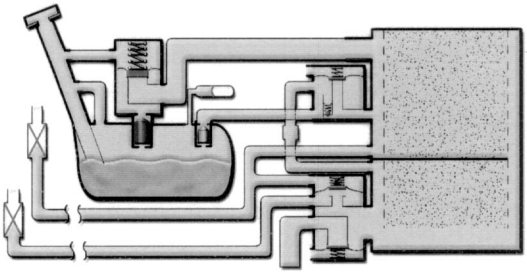

Figure 3. System Sealed

ECHO

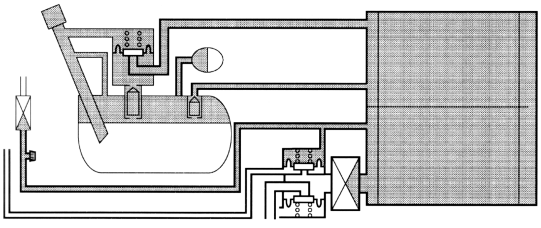

Figure 3. System Sealed

Late Type System Monitor Sequence (Continued)

Vent Control, CCV Operation P0446

This stage checks the CCV and vent (air inlet side) operation. When the vapor pressure rises to a specified point, the ECM opens the CCV. Pressure will increase rapidly because of the air allowed into the system. No increase or an increase below specified rate of pressure increase indicates a restriction on the air inlet side (see Figure 4).

Except ECHO

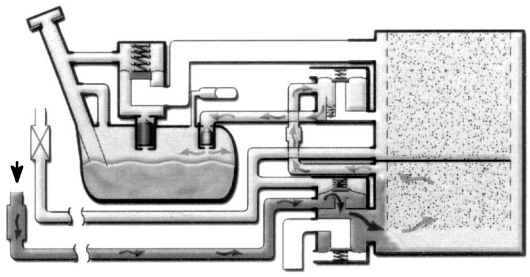

Figure 4. CCV Opens

ECHO

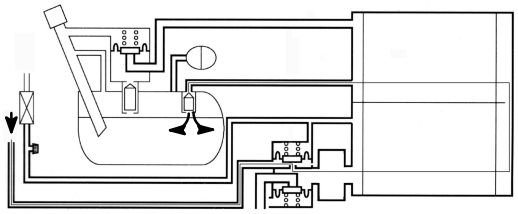

Figure 4. CCV Opens

Bypass VSV Operation P0446

In the next stage, the ECM closes the bypass VSV. This action blocks air entering the tank side of the system. The pressure rise on the fuel tank side is no longer as great. If there was no change in pressure, the ECM will conclude the bypass VSV did not close (see Figure 5).

Except ECHO

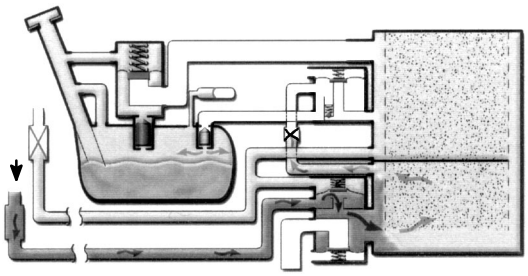

Figure 5. Bypass VSV Closes

Diagnostic Tips for Late Type EVAP System

This diagnostic process tests the EVAP System. The following diagnostic tips may be used in conjunction with the Diagnostic Procedures for EVAP DTCs listed in the Repair Manual. They may be used for all Late Type (Intrusive) EVAP Systems and for all EVAP DTCs. Refer to the Applicable Vehicles chart for applicability information.

The EVAP System Pressure Test Kit (P/N 00002–6872A) and the Scan Tool can be used to diagnose the EVAP System. Measuring EVAP System pressures using the EVAP System Pressure Tester Gauge and the Scan Tool can aid in the identification of leaks in the system.

System Outline (Except ECHO)

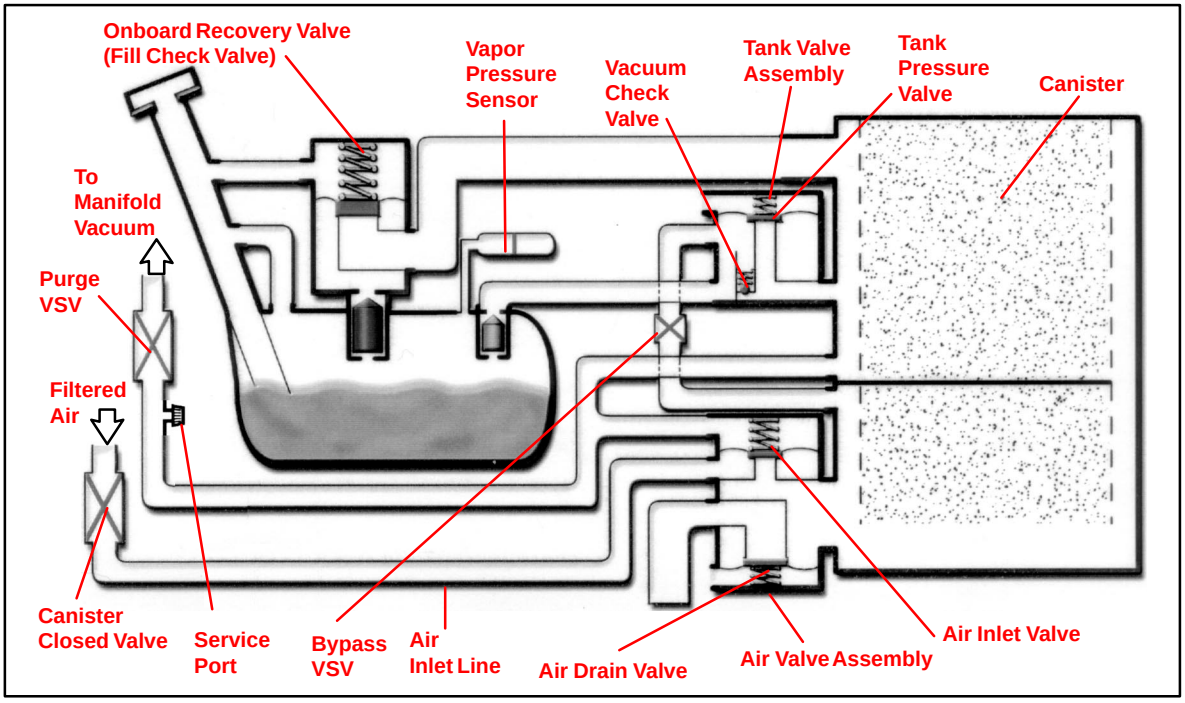

ECHO System Outline

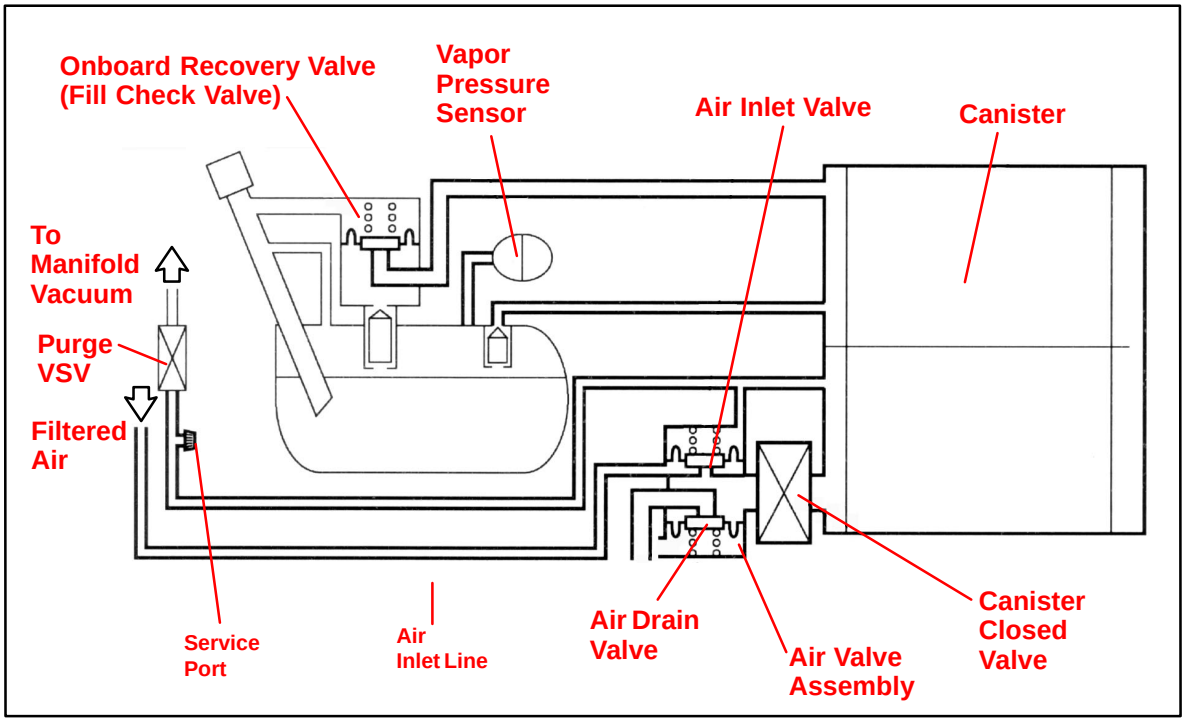

Diagnostic Tips for Late Type EVAP System (Continued)

Diagnostic Process Flow Chart

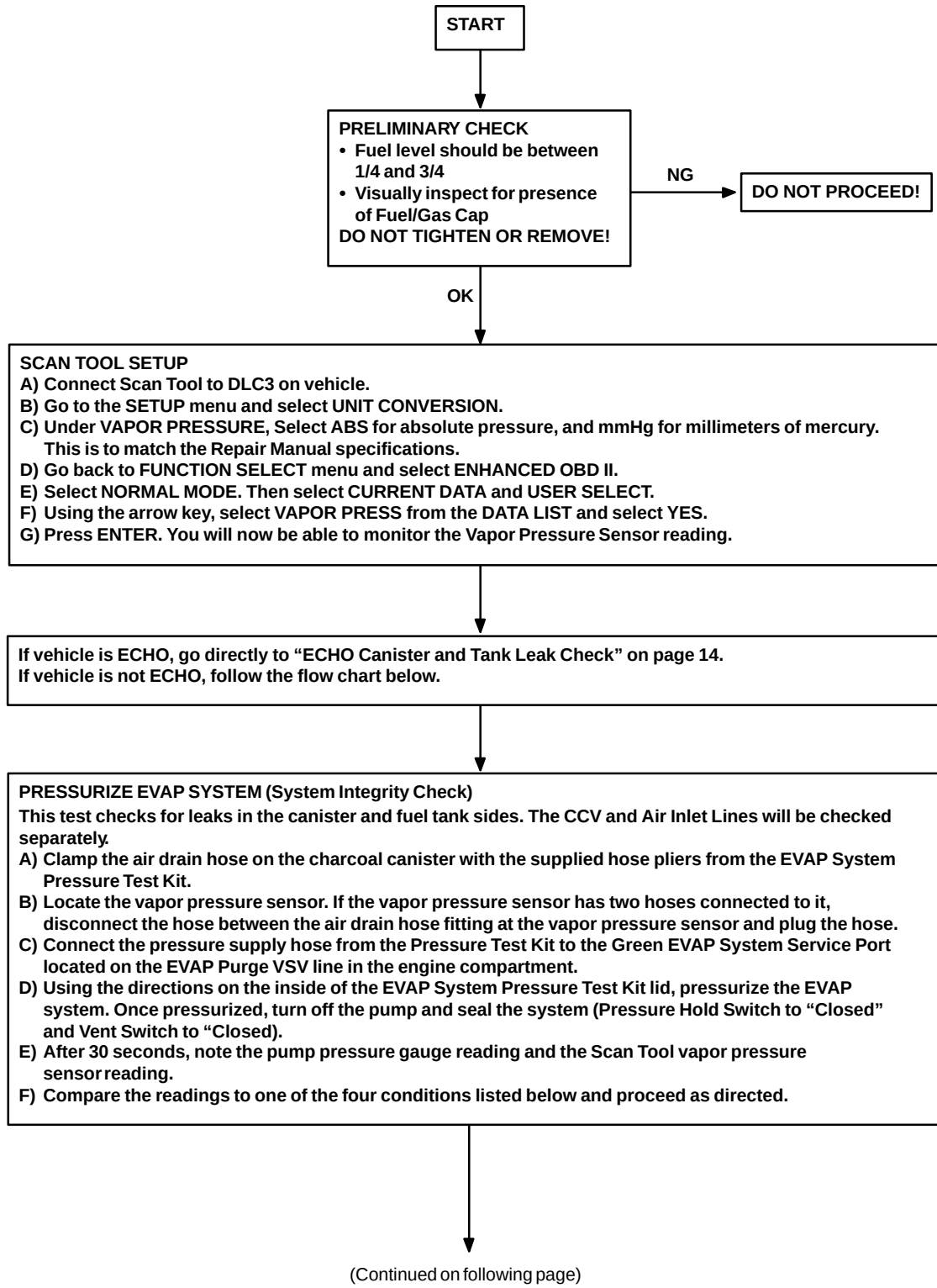

(Continued on following page)

Diagnostic Tips for Late Type EVAP System (Continued)

Diagnostic Process Flow Chart (Continued)

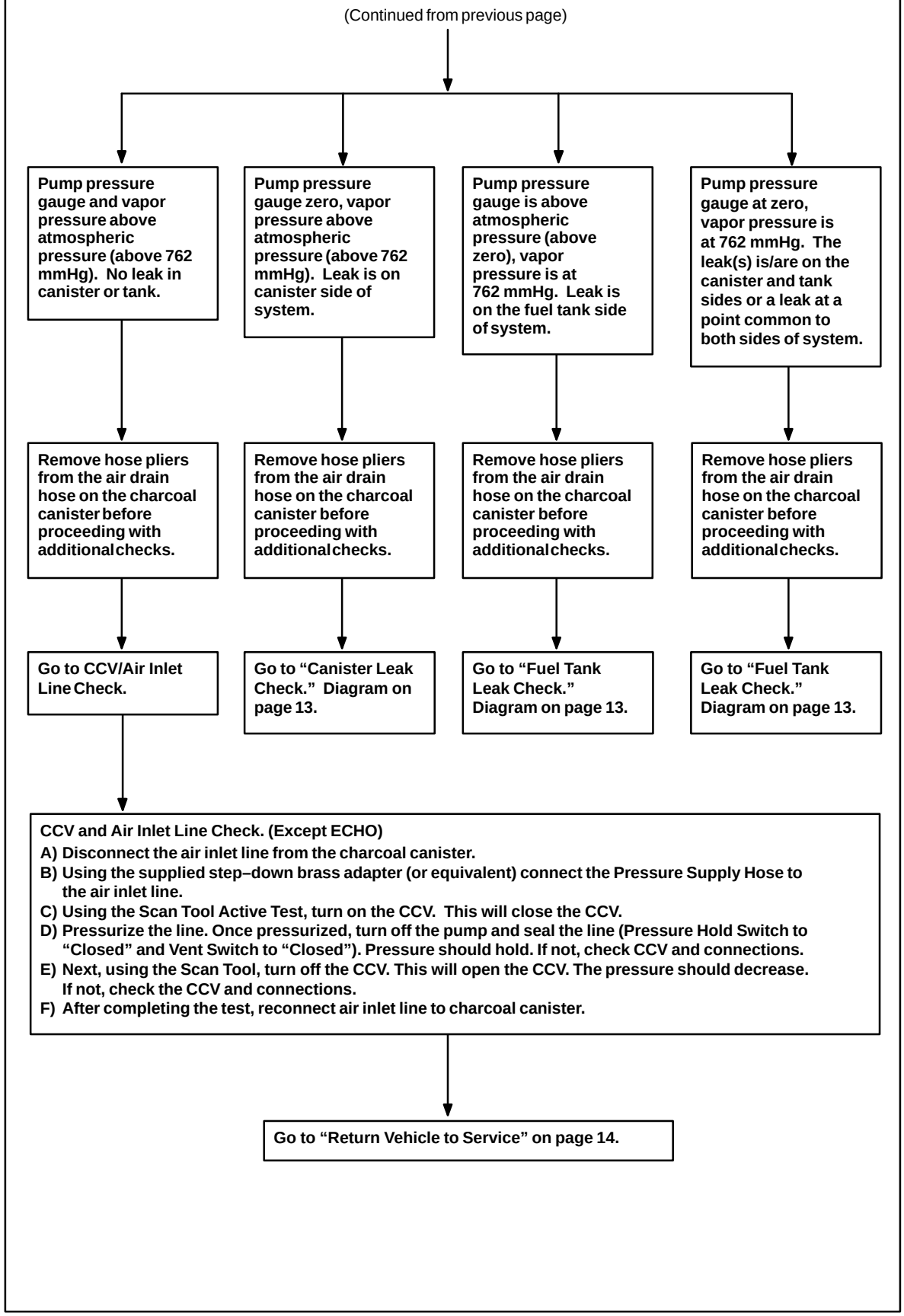

Diagnostic Tips for Late Type EVAP System (Continued)

Fuel Tank Leak Check (Except ECHO)

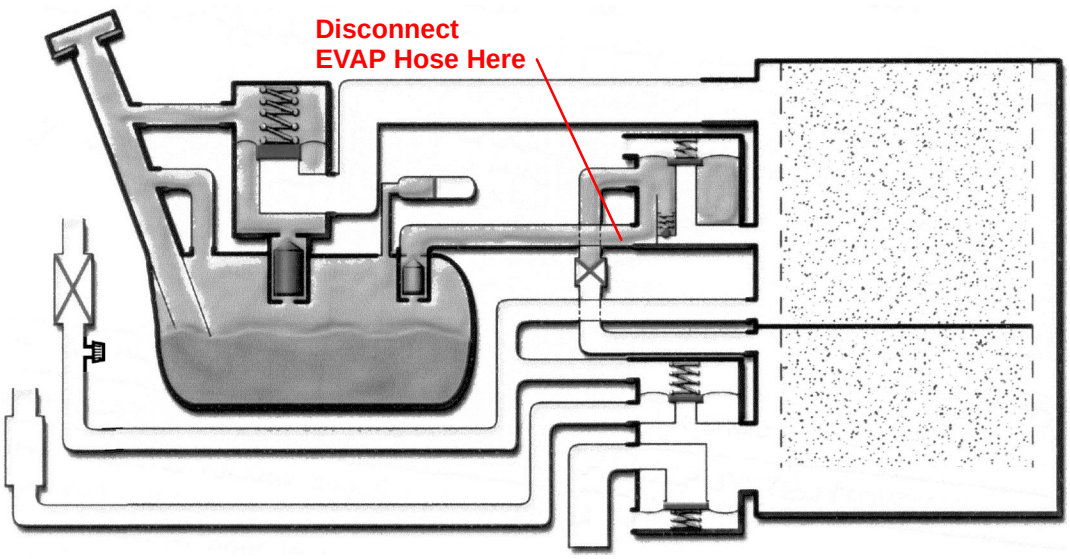

A. Using the supplied brass step–down adapter, disconnect the EVAP hose from the charcoal canister side as indicated above. Connect Pressure Supply hose from Pressure Test Kit to the EVAP hose and pressurize the fuel tank to 30 mmHg (4 kPa / 0.58 psi).

B. Check that the internal pressure of the tank will hold for 1 minute. Check shaded areas for leaks (soapy water can be used for leak detection). If pressure holds, then perform the Canister Leak Check.

C. When done, reconnect the EVAP line hose to the charcoal canister.

Canister Leak Check (Except ECHO)

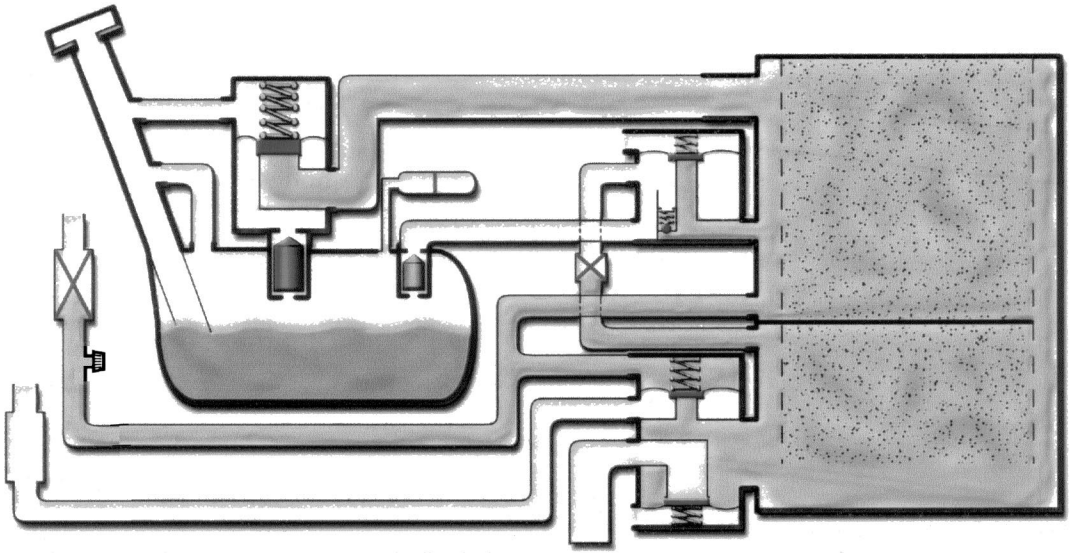

A. Connect the Pressure Supply hose from the Pressure Test Kit to the Green EVAP System Service Port located on the EVAP Purge VSV line in the engine compartment.

B. Using the directions on the inside of the EVAP System Pressure Test Kit lid, pressurize the EVAP system. Once pressurized, turn off the pump and seal the system (Pressure Hold Switch to “Closed” and Vent Switch to “Closed”)

C. With system pressurized at EVAP Service Port, check shaded areas for leaks (soapy water can be used for leak detection).

Diagnostic Tips for Late Type EVAP System (Continued)

ECHO Canister and Tank Leak Check

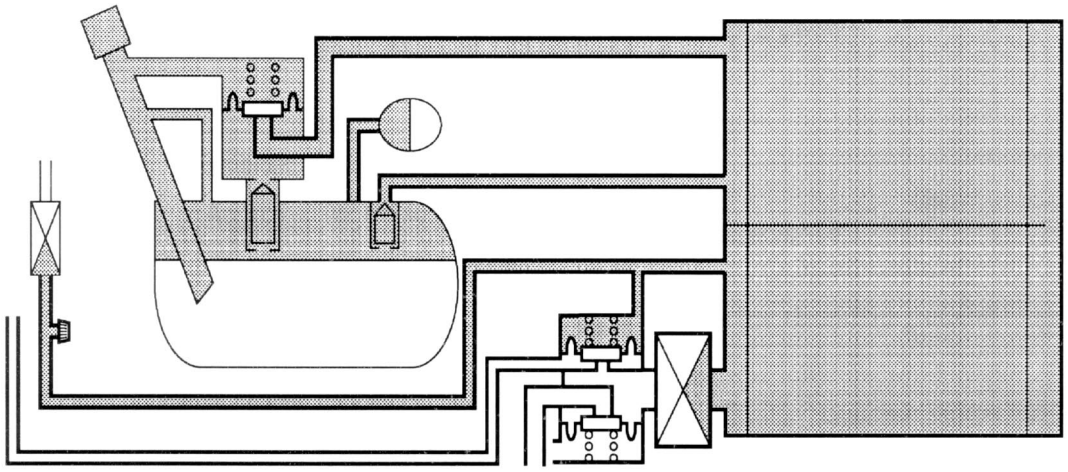

A. Connect the Pressure Supply hose from the Pressure Test Kit to the Green EVAP System Service Port located on the EVAP Purge VSV line in the engine compartment.
B. Using the directions on the inside of the EVAP System Pressure Test Kit lid, pressurize the EVAP system. Once pressurized, turn off the pump and seal the system (Pressure Hold Switch to "Closed" and Vent Switch to "Closed")
C. With system pressurized, check shaded areas for leaks (soapy water can be used for leak detection).

Return Vehicle to Service

A. After performing checks and/or repairs, be sure to reconnect all lines and verify that all plugs and hose pliers used for diagnosis have been removed.
B. For additional diagnostic procedures and information, refer to the appropriate Repair Manual.

TOYOTA

Technical Service BULLETIN

March 22, 2002

Title:

GENERAL MAINTENANCE TIP

Models:

All '93 – '03 Models

TSB

Introduction

To help prevent unnecessary complications during the oil fill process, no undue load should be placed on the oil baffle attached to the inside of the valve cover (see illustration). This baffle is designed to deflect oil and should not be used to support the weight of heavy oil fill devices. These devices can place stress on the baffle, and bend or break it during the oil fill process.

Applicable Vehicles

- **All 1993 – 2003** model year **Toyota** vehicles.

Oil Filling Procedure

Please take measures to ensure that the baffle is not damaged during the oil fill process. If it does become damaged, repair it before any collateral damage occurs.

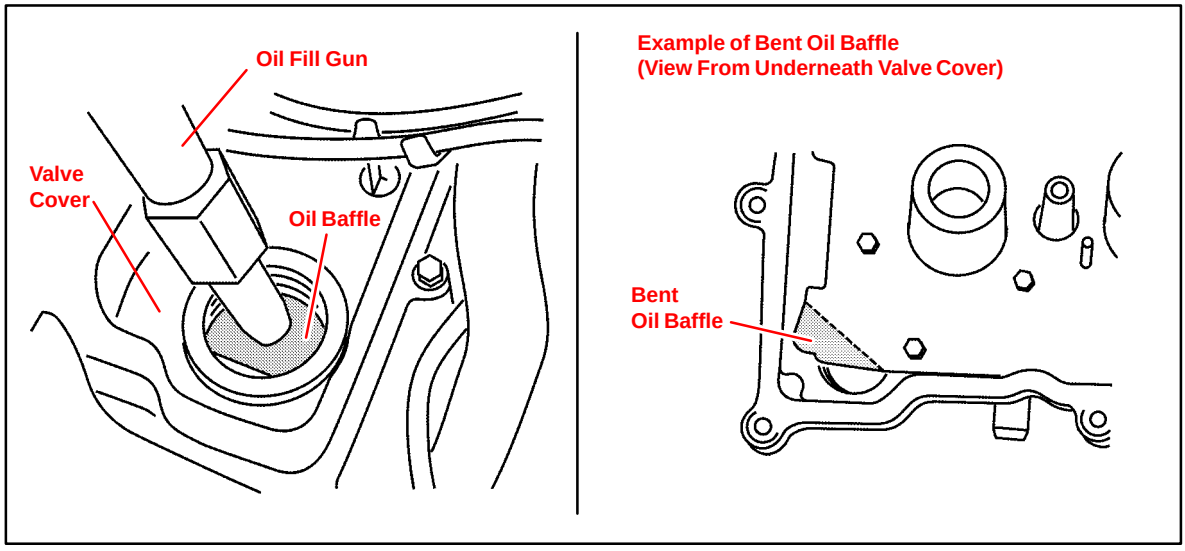

Warranty Information

OP CODE	DESCRIPTION	TIME	OPN	T1	T2
N/A	Not Applicable to Warranty	–	–	–	–

TOYOTA

Technical Service BULLETIN

February 24, 2003

Title:

SULFUR ODOR FROM EXHAUST

Models:

All Models

TSB

Introduction

Some owners of Toyota vehicles may experience a sulfur–like or “rotten egg” odor from the exhaust system. Sulfur is a natural component of crude oil from which gasoline is refined and the amount of sulfur can be decreased through the refining process. The amount of sulfur in fuel sold in California is regulated, however gasoline sold in other states can have substantially higher sulfur content. Sulfur content also varies considerably between gasoline brands and locations.

Applicable Vehicles

- **All Models**.

Repair Procedure

A sulfur odor emitted from the vehicle’s tailpipe does not necessarily indicate that there is an issue with the engine’s running condition, but is most likely directly related to the fuel. If the vehicle is exhibiting an excessive sulfur odor, the following checks should be performed:

- If the MIL light is ON, check for DTCs and repair as necessary.

If no trouble is found after performing the above check, recommend the customer try a different source of fuel.

Replacement of oxygen sensors, air/fuel ratio sensors or catalytic converters will not reduce the odor and will therefore **not** be considered warrantable.

Warranty Information

OP CODE	DESCRIPTION	TIME	OFP	T1	T2
N/A	Not Applicable to Warranty	–	–	–	–

TOYOTA

Technical Service BULLETIN

September 3, 2004

Title:

ENGINE BANK 1 AND BANK 2 A/F AND O2 IDENTIFICATION

Models:

Applicable Models

TSB

Introduction

This service bulletin provides information on the proper identification of engine bank 1 and engine bank 2 for correct A/F sensor and oxygen sensor replacement.

This bulletin contains information that identifies engine bank 1 and engine bank 2 on the following engines: 1MZ–FE, 3MZ–FE, 1GR–FE, 5VZ–FE and 2UZ–FE.

- Bank 1 (B1) refers to the bank that includes cylinder No. 1.
- Bank 2 (B2) refers to the bank opposite bank 1.
- Sensor 1 (S1) refers to the sensor that is located before the catalytic converters.
- Sensor 2 (S2) refers to the sensor that is located after the catalytic converters.

Applicable Vehicles

- **2003 – 2004** model year **4Runner** vehicles equipped with **1GR–FE** and **2UZ–FE engines**.
- **1994 – 2004** model year **Camry** vehicles equipped with **1MZ–FE engine**.
- **2004** model year **Camry and Solara** vehicles equipped with **3MZ–FE engine**.
- **2001 – 2003** model year **Highlander** vehicles equipped with **1MZ–FE engine**.
- **2004** model year **Highlander** vehicles equipped with **3MZ–FE engine**.
- **1998 – 2004** model year **Land Cruiser** vehicles equipped with **2UZ–FE engine**.
- **2001 – 2004** model year **Sequoia** vehicles equipped with **2UZ–FE engine**.
- **1998 – 2003** model year **Sienna** vehicles equipped with **1MZ–FE engine**.
- **2004** model year **Sienna** vehicles equipped with **3MZ–FE engine**.
- **1999 – 2003** model year **Solara** vehicles equipped with **1MZ–FE engine**.
- **1995 – 2004** model year **Tacoma** vehicles equipped with **5VZ–FE engine**.
- **2000 – 2004** model year **Tundra** vehicles equipped with **5VZ–FE** and **2UZ–FE engines**.
- **1995 – 1998** model year **T–100** vehicles equipped with **5VZ–FE engine**.

Warranty Information

OP CODE	DESCRIPTION	TIME	OFP	T1	T2
N/A	Not Applicable to Warranty	–	–	–	–

Engine Bank Identification

2UZ–FE Engine Bank Identification

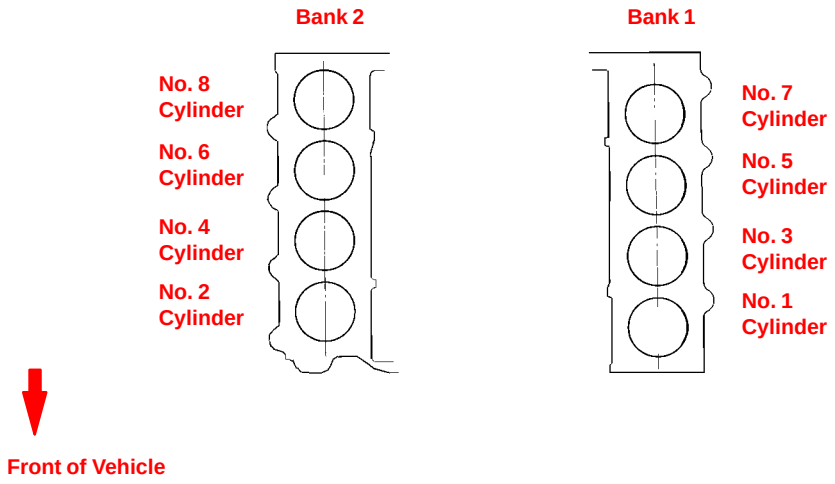

1MZ–FE and 3MZ–FE Engine Bank Identification

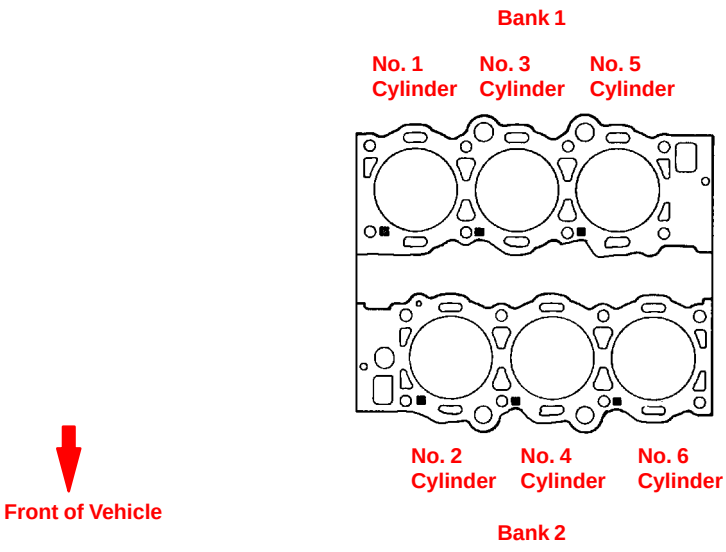

Engine Bank Identification (Continued)

5VZ–FE and 1GR–FE Engine Bank Identification

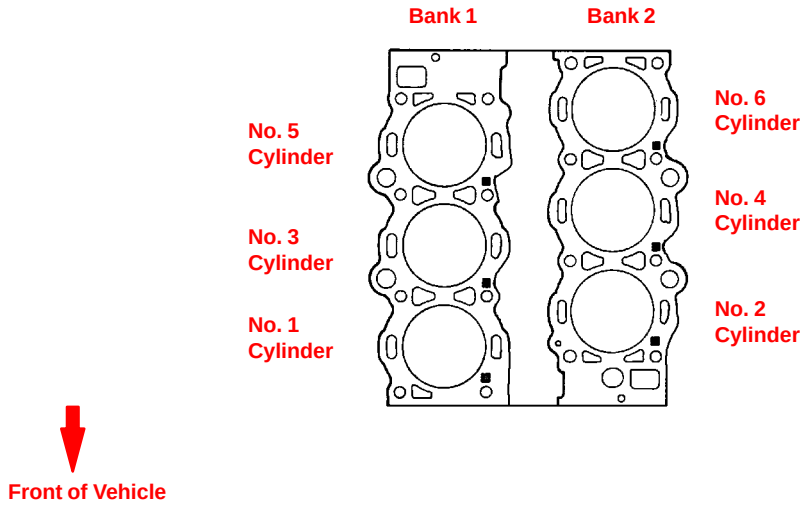

A/F and O2 Sensor Identification

Sensor Identification (Example of FWD V6)

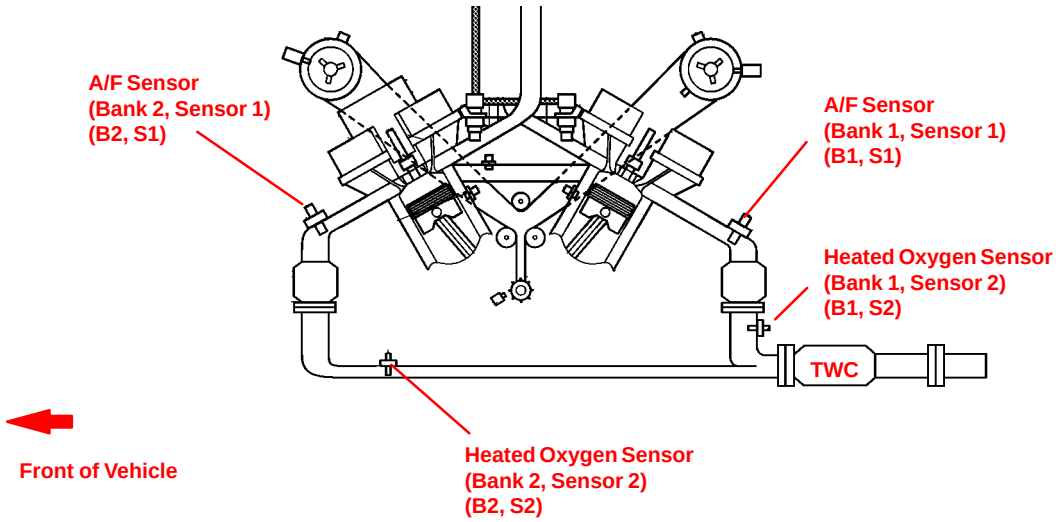

TOYOTA

Technical Service BULLETIN

June 2, 2000

Title:

EXHAUST MANIFOLD HEAT SHIELD RATTLE NOISE

Models:

'95 – '00 Tacoma

TSB

ENGINE

EG004–00

Introduction

Some Tacoma vehicles may experience a rattle noise caused by the exhaust manifold heat shield. Two wire mesh grommets and a reinforcement patch on the underside have been added to reduce the possibility of the exhaust manifold heat shield rattle noise.

Applicable Vehicles

- **1995 – 2000** model year **Tacoma** vehicles **(except CA Spec.)** equipped with **2RZ–FE** or **3RZ–FE** engines produced before the VINs below.

Production Change Information

MODEL	STARTING VIN
Tacoma (2RZ–FE)	4TA*L**N*YZ619196
Tacoma (3RZ–FE)	4TA*M**N*YZ619196

Parts Information

PREVIOUS PART NUMBER	CURRENT PART NUMBER	PART NAME
17167–75011	17167–75012	Exhaust Manifold Heat Shield
90119–06399	90119–06894	Bolt, With Washer

Repair Procedure

1. Inspect the Exhaust Manifold Heat Shield for cracking around the 2 bolts and 2 studs.
2. If cracking is found, replace the Exhaust Manifold Heat Shield, Bolts, Washers, Studs, and Nuts in specified quantities.
3. Insert 2 bolts. (P/N 90110–06894)
4. Reuse studs/nuts in the specified areas.

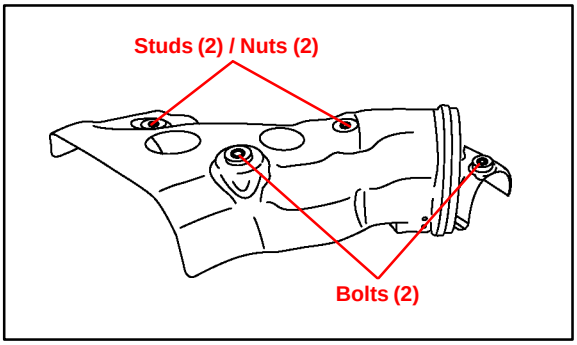

Warranty Information

OP CODE	DESCRIPTION	TIME	OPN	T1	T2
170031	R & R Exhaust Manifold Heat Insulator	0.2	17167–75011	91	16

Applicable Warranty*:

This repair is covered under the Federal Emissions Warranty. This warranty is in effect for 36 months or 36,000 miles, whichever occurs first, from the vehicle's in–service date.

* Warranty application is limited to correction of a problem based upon a customer's specific complaint.

TOYOTA

Technical Service BULLETIN

October 8, 1999

Title:

ENGINE IMMOBILIZER SYSTEM PRECAUTIONS

Models:

All Models

TSB

REVISION NOTICE:

The information contained in this TSB updates EL001–98 dated January 23, 1998.

Introduction

This bulletin applies to 1998 and newer Toyota vehicles. When using an immobilizer key containing a transponder chip, observe the following precautions while starting the engine.

1. The key ring should **not** rest on or be pressed against the key grip.

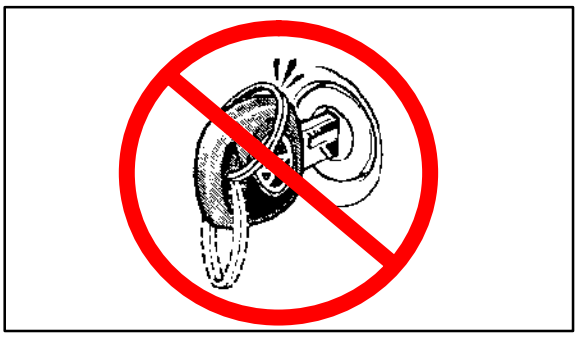

2. Do **not** place any other transponder devices on the same key ring. Such devices would include transponder equipped units used for charging fuel.

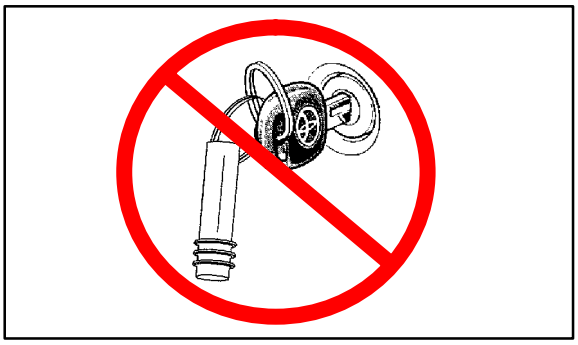

3. Do **not** place any other immobilizer keys on the same key ring with the key used to start the vehicle.
4. If the above precautions are not observed and an engine starting or running problem occurs, remove all items which may interfere with the ignition key transponder signal. Turn off the engine and then restart.

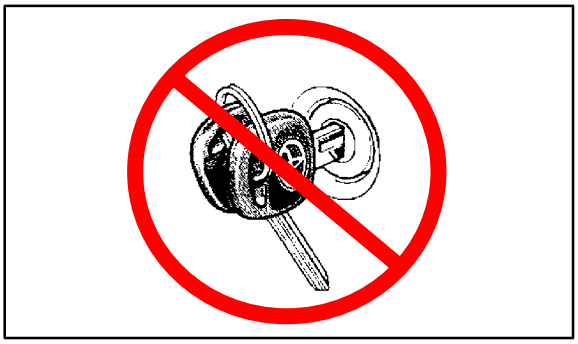

Applicable Vehicles

- **All Toyota models equipped with an engine immobilizer system.**

Warranty Information

OP CODE	DESCRIPTION	TIME	OPN	T1	T2
N/A	Not Applicable to Warranty	–	–	–	–

TOYOTA

Technical Service BULLETIN

December 20, 2002

Title:

WIRELESS TRANSMITTER & PROGRAMMING GUIDE

Models:

All Applicable

TSB

REVISED

ELECTRICAL

EL008-02

TSB REVISION NOTICE:

- **February 28, 2003: In Wireless Transmitter Identification section (pages 5 and 6), Figures 5, 9, 10, 12, and 13 updated to include 2003 model year; Figure 11 updated to include 1999 and 2003 model year.**
- **January 17, 2003: 2003 model year added to Solara in the Application Chart on page 3.**
- **The information contained in this TSB supercedes TSB EL010–01, dated October 26, 2001. The previous TSB, EL010–01, should be discarded.**

Introduction

Difficulties during Remote Keyless Entry Transmitter Programming can arise due to confusion between Toyota Factory Wireless systems and Toyota Port/Dealer installed systems. This bulletin will assist in identifying the system/correct remote transmitters for each vehicle, and provide the location of the most accurate programming procedure for each system.

Applicable Vehicles

- All applicable **Toyota** vehicles.

Warranty Information

OP CODE	DESCRIPTION	TIME	OFP	T1	T2
N/A	Not Applicable to Warranty	–	–	–	–

System Identification

The following table contains all of the necessary information to correctly identify the type of system installed, and where to go to get programming procedures for each vehicle.

NOTE:

Should a vehicle having both VIP and Factory systems available (as identified in the following table) be brought in without any remotes (or one non–working remote), use the following tips to help determine which type of wireless system (O.E. or PIO/DIO) the vehicle has.

- **Look at the Trim Level of the vehicle. Higher–grade vehicles will tend to have O.E. systems, while entry–grade vehicles will tend to have VIP. For example, the 2001 Camry XLE has Factory RKE, but the LE and CE grades have VIP.**
- **Look for a "Status Monitor" with a glass breakage sensor and an LED externally installed into the dashboard or on the center console. Most VIP systems will have this.**
- **Locate the ECU (refer to the applicable vehicle VIP Manual installation instructions for location). Once located, refer to the part label.**
- **Attempt to perform the factory wireless programming procedure to get a response from the vehicle. Select the "confirmation mode" and see if any "Lock/Unlock" response is received, if so, the vehicle has a factory system.**

Application Chart

APPLICATION		DEALER/PORT INSTALLED		FACTORY INSTALLED	
VEHICLE	**YEAR**	**SYSTEM/REMOTE**	**PROGRAMMING**	**FACTORY REMOTE**	**PROGRAMMING**
Avalon	1995	TVSS / Fig. 2 *1	TVSS Owner's Guide	Fig. 8	TSB – EL003–99
	1996 – 1997	RS3000 / Fig. 3	TSB – AX005–99		
	1998 – 1999	RS3000 / Fig. 4		Fig. 9 *2	
	2000 – 2001	RS3200 / Fig. 5	2000 VIP Manual *6		RM 02 V2, BE–99
	2002 – 2003	N/A	N/A		TSB – EL004–01
Camry	1990 – 1994	TVSS / Fig. 1 *1	TVSS Owner's Guide	N/A	N/A
	1995	TVSS / Fig. 2 *1			
	1996	RS3000 / Fig. 3	TSB – AX005–99		
	1997			Fig. 7	TSB – EL008–98
	1998 – 1999	RS3000 / Fig. 4			
	2000 – 2001	RS3200 / Fig. 5 or 6 *7	2000 VIP Manual *6	Fig. 11	RM 01 V2, BE–86
	2002 – 2003			Fig. 9 *2	TSB – EL004–01
Celica	1990 – 1994	TVSS / Fig. 1 *1	TVSS Owner's Guide	N/A	N/A
	1995	TVSS / Fig. 2 *1			
	1996 – 1997	RS3000 / Fig. 3	TSB – AX005–99		
	1998 – 1999	RS3000 / Fig. 4			
	2000 – 2003	RS3200 / Fig. 5	2000 VIP Manual *6	Fig. 11	TSB – EL004–01
Corolla	1990 – 1994	TVSS / Fig. 1 *1	TVSS Owner's Guide	N/A	N/A
	1995	TVSS / Fig. 2 *1			
	1996 – 1997	RS3000 / Fig. 3	TSB – AX005–99		
	1998 – 2002	RS3000 / Fig. 4			
	2003	RS3200 / Fig. 5	2000 VIP Manual *6	Fig. 11	TSB – EL004–01
Cressida	1991 – 1992	TDSE / Fig. 1 *1	TVSS Owner's Guide	N/A	N/A
ECHO	2000 – 2003	RS3200 / Fig. 5	2000 VIP Manual *6	Fig. 11	TSB – EL004–01
4Runner	1990 – 1994	TVSS / Fig. 1 *1	TVSS Owner's Guide	N/A	N/A
	1995	TVSS / Fig. 2 *1			
	1996 – 1997	RS3000 / Fig. 3	TSB – AX005–99		
	1998	RS3000 / Fig. 4			
	1999			Fig. 10 *5	RM 02 V2, BE–98
	2000 – 2002	RS3200 / Fig. 5	2000 VIP Manual *6		
	2003	N/A	N/A		RM 03, 73–16
Highlander	2001 – 2003	N/A	N/A	Fig. 11	TSB – EL004–01
Land Cruiser	1991 – 1994	TVSS / Fig. 1 *1	TVSS Owner's Guide	N/A	N/A
	1995	TVSS / Fig. 2 *1			
	1996 – 1997	RS3000 / Fig. 3	TSB – AX005–99		
	1998 – 2002	N/A	N/A	Fig. 13	RM 02 V1, DI–624
	2003				RM 03 V2, BE–93

Application Chart (Continued)

APPLICATION		DEALER/PORT INSTALLED		FACTORY INSTALLED	
VEHICLE	**YEAR**	**SYSTEM/REMOTE**	**PROGRAMMING**	**FACTORY REMOTE**	**PROGRAMMING**
Matrix	2003	N/A	N/A	Fig. 11	TSB – EL004–01
MR2	1991 – 1994	TDSE / Fig. 1 *1	TVSS Owner's Guide	N/A	N/A
	1995	TVSS / Fig. 2 *1			
	2001 – 2003	RS3200 *3 / Fig.5	2003 VIP Manual		
Paseo	1992 – 1994	TVSS / Fig. 1 *1	TVSS Owner's Guide	N/A	N/A
	1995	TVSS / Fig. 2 *1			
	1996 – 1997	RS3000 / Fig. 3	TSB – AX005–99		
	1998	RS3000 / Fig. 4			
Previa	1991 – 1994	TDSE / Fig. 1 *1	TVSS Owner's Guide	N/A	N/A
	1995	TVSS / Fig. 2 *1			
	1996 – 1997	RS3000 / Fig. 3	TSB – AX005–99		
Prius	2001 – 2003	N/A	N/A	Fig. 11	TSB – EL004–01
RAV4	1996 – 1997	RS3000 / Fig. 3	TSB – AX005–99	N/A	N/A
	1998 – 2000	RS3000 / Fig. 4			
	2001 – 2003	RS3200 / Fig. 5	2000 VIP Manual *6	Fig. 11	TSB – EL004–01
Sequoia	2001 – 2003	N/A	N/A	Fig. 10 *5	RM 03 V2, BE–105
Sienna	1998	RS3000 / Fig. 4	TSB – AX005–99	Fig. 7	TSB – EL009–98
	1999			Fig. 11 / Fig. 12	
	2000	RS3000 / Fig.4 *4			
	2001 – 2002	RS3200 / Fig. 5	2000 VIP Manual *6		RM 02 V2, BE–87
	2003	N/A	N/A		RM 03 V2, BE–91
Solara	1999 – 2001	RS3000 / Fig. 4	TSB – AX005–99	Fig. 11	RM 02 V2, BE–87
	2002–2003	N/A	N/A	Fig. 9 *2	
Supra	1991 – 1992	TDSE / Fig. 1 *1	TVSS Owner's Guide	N/A	N/A
	1995	TDSE / Fig. 2 *1			
	1996 – 1997	RS3000 / Fig. 3	TSB – AX005–99		
	1998	RS3000 / Fig. 4			
T100	1993 – 1994	TVSS / Fig. 1 *1	TVSS Owner's Guide	N/A	N/A
	1995	TVSS / Fig. 2 *1			
	1996 – 1997	RS3000 / Fig. 3	TSB – AX005–99		
	1998	RS3000 / Fig. 4			
Tacoma	1995	TVSS / Fig. 2 *1	TSB – AX005–99	N/A	N/A
	1996 – 1997	RS3000 / Fig. 3			
	1998 – 2001	RS3000 / Fig. 4			
	2002	RS3200 / Fig. 5	2000 VIP Manual *6		
	2003	RS3200*3 / Fig. 5	2003 VIP Manual *6		

Application Chart (Continued)

APPLICATION		DEALER/PORT INSTALLED		FACTORY INSTALLED	
VEHICLE	**YEAR**	**SYSTEM/REMOTE**	**PROGRAMMING**	**FACTORY REMOTE**	**PROGRAMMING**
Tercel	1991 – 1994	TVSS / Fig. 1 *1	TVSS Owner's Guide	N/A	N/A
	1995	TVSS / Fig. 2 *1			
	1996 – 1997	RS3000 / Fig. 3	TSB – AX005–99		
	1998	RS3000 / Fig. 4			
Truck	1990 – 1994	TVSS / Fig. 1 *1	TVSS Owner's Guide	N/A	N/A
	1995	TVSS / Fig. 2 *1			
Tundra	2000 – 2001	RS3000 / Fig. 4	TSB – AX005–99	N/A	N/A
	2002 – 2003	RS3200*3 / Fig. 5	2003 VIP Manual		

*1 Original style TVSS/TDSE system remotes are no longer available as replacement parts. Black RS3000 remotes (Figure 3) can be used with these systems.

*2 While the outward appearances are the same, there are 3 different remotes of this style (not interchangeable). Check the FCC ID Number on the back of the remote to verify correct application:
- Avalon 1998 – 1999 FCC ID: HYQ1512Y / 2000 – 2003 FCC ID: HYQ12BAN
- Camry/Solara 2002 – 2003 FCC ID: GQ43VT14T

*3 This is a variant of the RS3200 TDS system, which does not include the security functions. The VIP manual outlines programming procedures used on these vehicles.

*4 RS3200 was launched prior to the 2001 MY Change Over. Please refer to the 2000 VIP Manual if necessary.

*5 While the outward appearances are the same, there are 2 different remotes of this style (not interchangeable). Check the FCC ID Number on the back of the remote to verify correct application:
- 1999 – 2002 4Runner – FCC ID: HYQ1512Y
- Sequoia / 2003 4Runner – FCC ID: HYQ12BAN

*6 RS3200 programming procedures were sent as a supplement to the 2000 VIP Manual. This information can now be found on the TIS system.

*7 The RS3200 system was only available on early production vehicles in the 2003 model year.

Wireless Transmitter Identification

DEALER or PORT INSTALLED SYSTEMS

Figure 1.

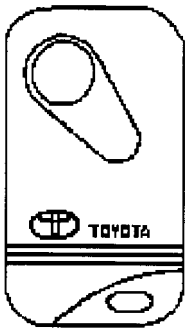

TVSS/TDSE
1990 – 1994

Figure 2.

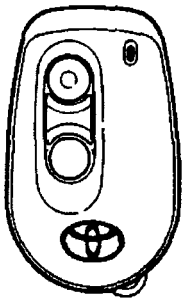

TVSS/TDSE
1995

Figure 3.

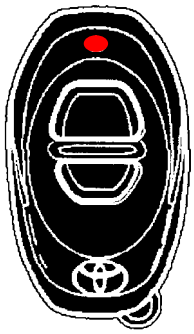

RS3000 (BLACK)
1996 – 1997

Figure 4.

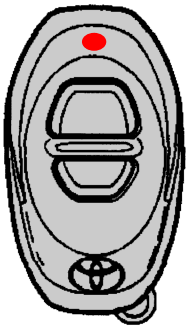

RS3000 (GRAY)
1998 – 2002

Figure 5.

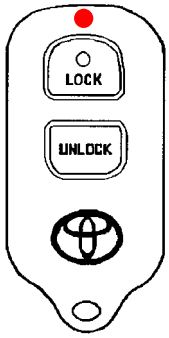

RS3200*
2000 – 2003

Figure 6.

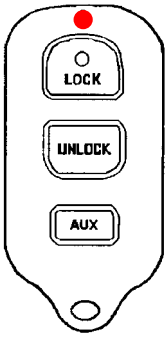

RS3200*
2000 – 2002

* Panic Button on Back Side

Wireless Transmitter Identification (Continued)

FACTORY INSTALLED or "ORIGINAL EQUIPMENT" SYSTEMS

Figure 7.

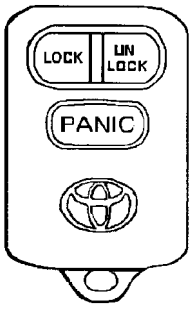

O.E. 3 Button
1997 – 1999

Figure 8.

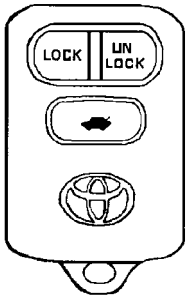

O.E. 3 Button
1995 – 1997

Figure 9.

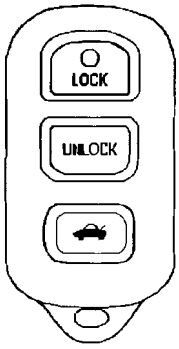

O.E. 4 Button*
1998 – 2003

Figure 10.

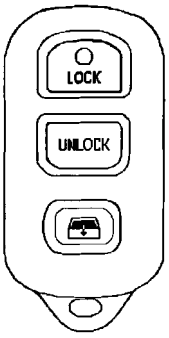

O.E. 4 Button*
1999 – 2003

Figure 11.

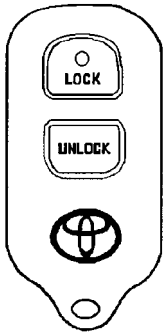

O.E. 3 Button*
1999 – 2003

Figure 12.

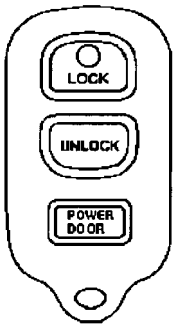

O.E. 4 Button*
1999 – 2003

Figure 13.

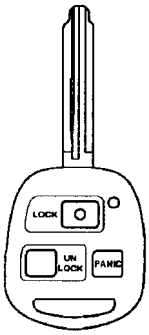

O.E. In–Key
1998 – 2003

* Panic Button on Back Side

TOYOTA

Technical Service BULLETIN

October 6, 2000

Title:

DAYTIME RUNNING LIGHT DISABLING PROCEDURE

Models:

All Models

TSB

Introduction

Some customers may request to have the Daytime Running Lights (DRL) on their Toyota vehicle disabled. These customers may live or work in military bases or in communities that have light–sensitive gates or guardhouses. This bulletin provides instructions for disabling the feature on the Toyota vehicles listed below. If the Daytime Running Lights (DRL) have been previously disabled, the information in this bulletin can be used to enable the feature at the request of the customer.

IMPORTANT:

Please be sure the customer is informed that when the Daytime Running Lights (DRL) are being disabled, although it is not required by the Federal Motor Vehicle Safety Standards for safety compliance, it has been listed as a safety feature in advertising brochures. In addition, on models equipped with the Twilight Sentinel feature, the headlights will be defaulted to a manual system and will no longer function automatically.

Applicable Vehicles

- **All Models** equipped with **Daytime Running Lights (DRL)** (see chart below).

Parts Information

TOOLS & MATERIALS	QUANTITY
Wire Harness Repair Kit	1

NOTE:

After referencing the chart, proceed to the repair procedure on the following pages.

Reference Chart

MODEL	MODEL YEAR	ECU	CONNECTOR	PIN#	EWD PG#
Avalon	1999	DRL Main Relay	D4	1	110
	2000	Body ECU	B5	6	99
Camry S/D*	1999	DRL Main Relay	D6	23	102
	2000			10	96
Camry Solara*	1999/2000			23	102/96
Celica*	2000	Body ECU	B6	17	75
Corolla*	1999/2000	DRL Main Relay	D3	23	84/72
ECHO	2000		D2	12	67
4Runner	2000		D8	2	99
Land Cruiser	1999/2000				90/88
MR2 Spyder	2000		D2	12	69
RAV4	1999/2000		D17	2	72/70
Sienna	1999/2000		D4		83/81
Tacoma	2000		D8		115
Tundra	2000		D7		95

* Vehicles equipped with Twilight Sentinel.

Warranty Information

OP CODE	DESCRIPTION	TIME	OPN	T1	T2
N/A	Not Applicable to Warranty	–	–	–	–

Repair Procedure

1. Disconnect the Battery.
2. Use the locking pick tool from the wire harness repair kit and back out the terminal from the appropriate connector for the DRL Relay or Body ECU. See the Reference Chart on Page 1 of this bulletin for pin and connector information.

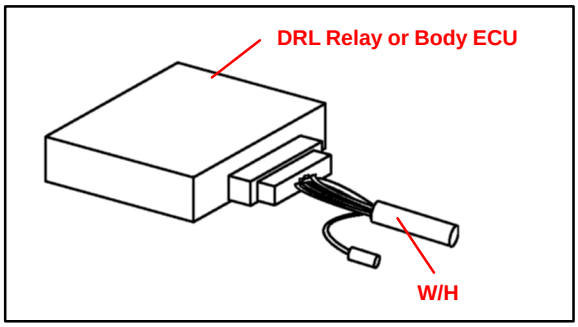

3. Insulate the removed terminal using vinyl electrical tape.

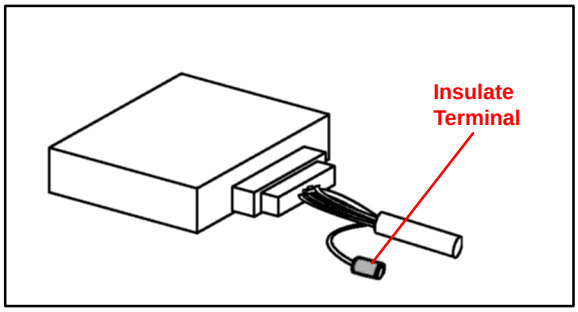

4. Secure the wire and terminal to the outside of the wire harness using vinyl electrical tape.

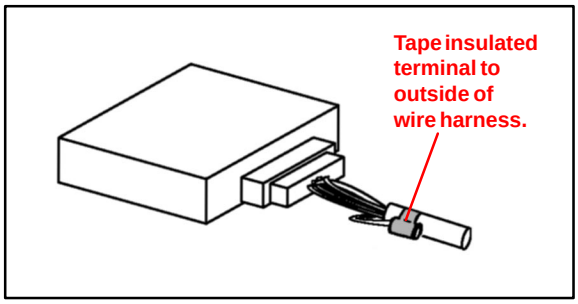

NOTE:

For the 2000 MY Avalon, proceed to Step 5. For all remaining models, proceed to Step 6.

5. For 2000 model year Avalon:
   A. Order a new terminal with lead that is the same size and type as the terminal previously removed from the connector. (PN 82998–12690)

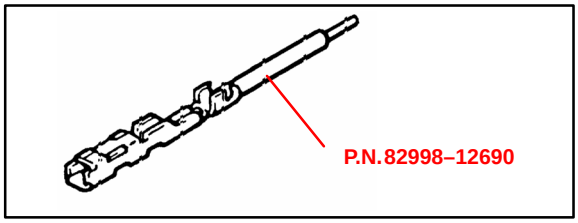

   B. Securely attach a 45 cm/ 18 in wire with an outside diameter of 2.0 mm or larger to the tail of the new terminal.

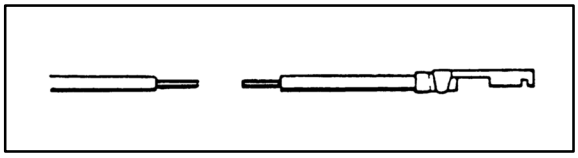

Repair Procedure

C. Securely attach an eyelet with a hole size of 7 mm to the end of the new wire.

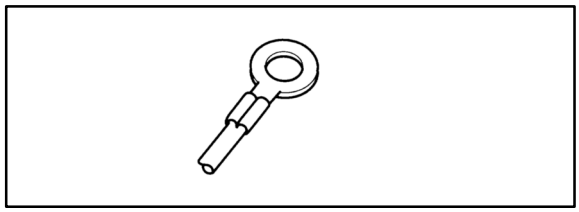

D. Insert the new terminal with lead into the Body ECU Connector B5, previously vacated by the original terminal.

E. Properly attach and route the new wire to the exterior of the existing wire harness in a manner that will not allow it to become damaged or come into contact with any other circuits.

F. Securely attach the eyelet to the existing ground point located in the left kick panel area. (Ground Point IF)

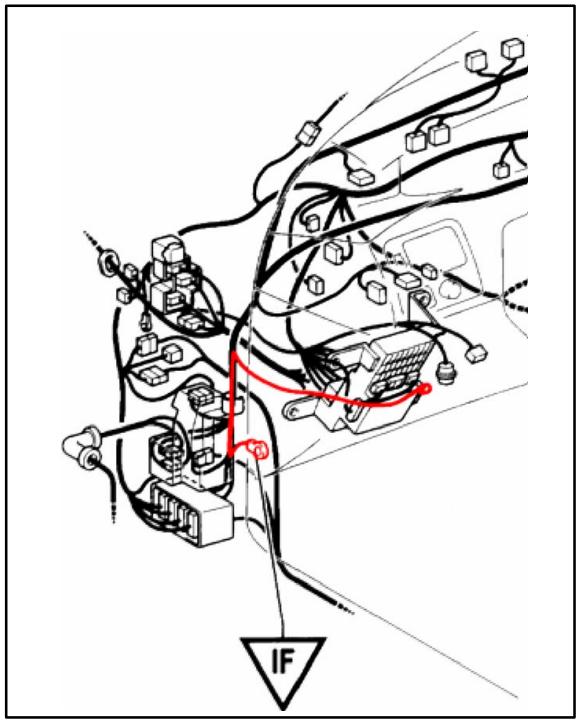

6. Check that the Daytime Running Light (DRL) operation has been disabled.
7. Reassemble any interior panels that were removed to gain access to components, connectors, etc.

TOYOTA

Technical Service BULLETIN

January 28, 2000

Title:

2000 MODEL YEAR PAINT CODES

Models:

All '00 Models

TSB

Introduction

Attached for your reference is a list of all 2000 model year OEM paint codes.

NOTE:

The body color code is on the vehicle Certification Regulation Label, located on the left front door "B" Pillar or door rear lower surface.

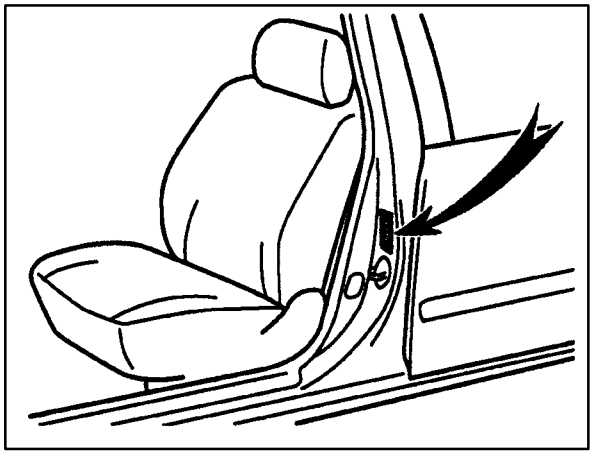

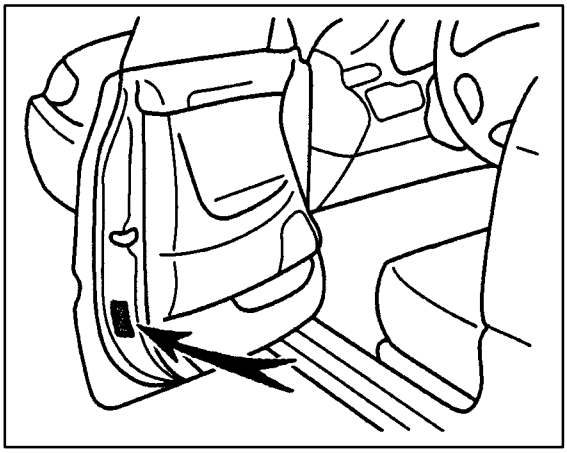

Please contact your local paint representative for the actual paint mixing formulas or if you need help in color matching.

Applicable Vehicles

- **All 2000 Models.**

Warranty Information

OP CODE	DESCRIPTION	TIME	OPN	T1	T2
N/A	Not Applicable to Warranty	–	–	–	–

Paint Codes & Color Names

CODE	COLOR NAME	ECHO	COR	CAM	CNG CAM	AVL	CEL	MIR8	SOL	SNA	RAV4	RAV4 EV	4RN	TAC	TUN	L-C
056	Natural White															
040	Super White															
051	Diamond White Pearl															
1A0	Platinum Metallic															
1A5	Desert Dune Pearl															
199	Alpine Silver Metallic															
1B1	Champagne Pearl															
1B2	Antique Sage Pearl															
1B9	Quicksilver FX															
1C0	Millennium Silver Metallic															
1C3	Riverock Green Mica															
1C4	Silverstream Opalescence															
1C6*	Graphite Gray Pearl															
1C7*	Thunder Gray Metallic															
1C8	Lunar Mist Metallic															
1D0*	Liquid Silver Metallic															
202	Black															
209*	Black Sand Pearl															
210*	Carbon Blue															

* New colors for the 2000 model year.

Paint Codes & Color Names (Continued)

CODE	COLOR NAME	ECHO	COR	CAM	CAM CAM	AVL	CEL	MRS	SOL	SNA	RAV4	RAV4 EV	4RN	TAC	TUN	L-C
3H7	Cardinal Red													■		
3K4	Sunfire Red Pearl												■	■	■	
3L5	Radiant Red												■			
3M5	Sandrift Metallic		■													
3M6	Napa Burgundy Pearl									■						
3M8	Venetian Red Pearl		■								■	■				
3N2	Mahogany Pearl															
3N5	Red Flame Metallic								■							
3N6	Vintage Red Pearl			■		■		■								
3P0*	Absolutely Red	■					■	■								
4M4	Sierra Beige Metallic													■		
4M9	Cashmere Beige Metallic			■	■											
4P3	Desert Bronze Metallic															■
4P6	Autumn Red Mica								■						■	
4Q5*	Gold Dust Metallic					■			■							
4Q3*	Cognac Brown Mica					■										
4Q2*	Frosted Mink Pearl					■				■						
576*	Super Yellow							■							■	

* New colors for the 2000 model year.

Paint Codes & Color Names (Continued)

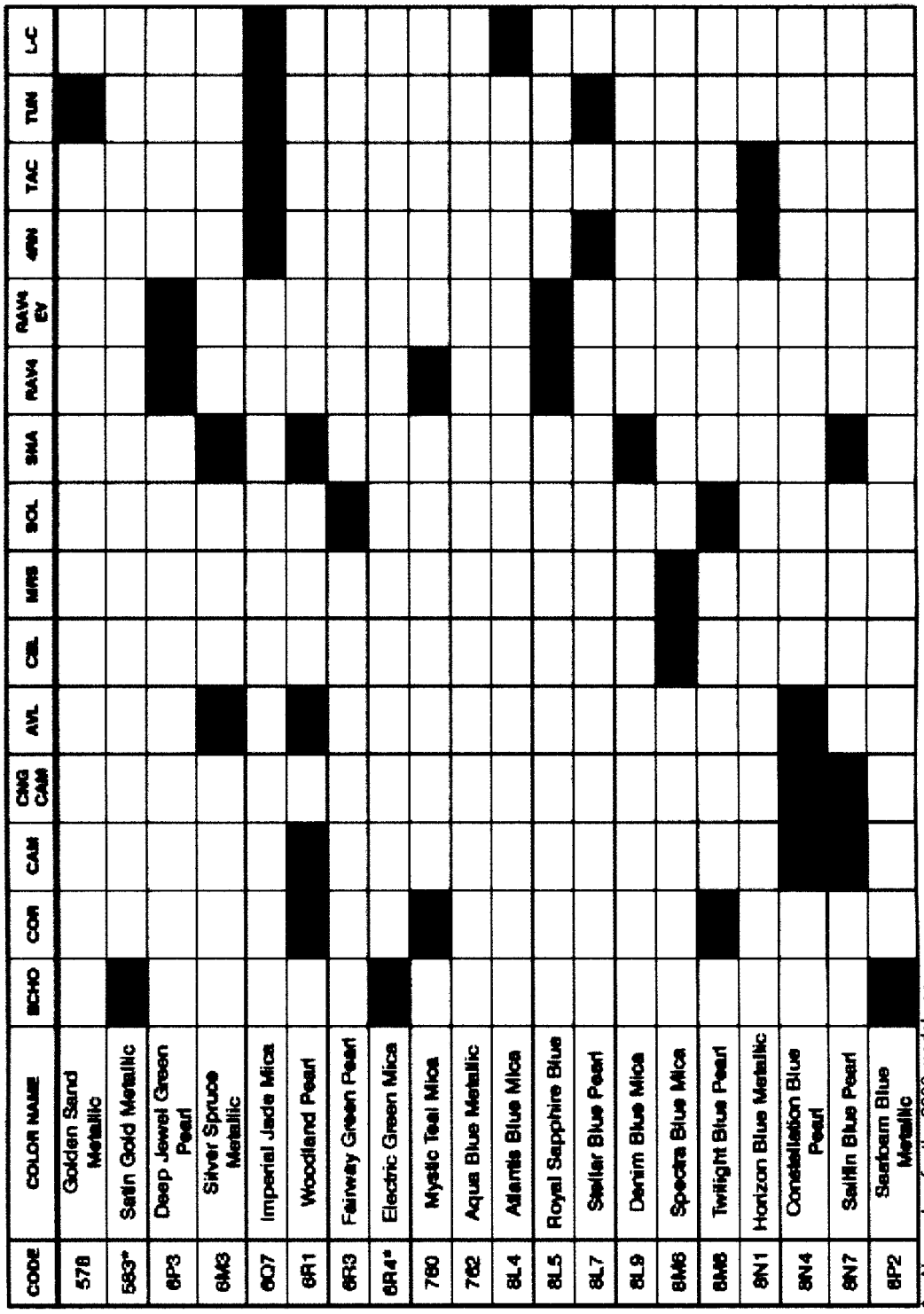

CODE	COLOR NAME	ECHO	CON	CAM	CNG CAM	AVL	CBL	MRS	SOL	SNA	RAV4	RAV4 EV	4RN	TAC	TUN	LAC
578	Golden Sand Metallic														■	
583*	Satin Gold Metallic	■														
6P3	Deep Jewel Green Pearl										■	■				
6M3	Silver Spruce Metallic					■				■						
6G7	Imperial Jade Mica												■	■	■	■
6R1	Woodland Pearl		■	■		■				■						
6R3	Fairway Green Pearl								■							
6R4*	Electric Green Mica	■														
760	Mystic Teal Mica		■								■					
762	Aqua Blue Metallic															
8L4	Atlantis Blue Mica															■
8L5	Royal Sapphire Blue											■	■			
8L7	Stellar Blue Pearl												■		■	
8L9	Denim Blue Mica									■						
8M6	Spectra Blue Mica						■	■								
8M8	Twilight Blue Pearl		■						■							
8N1	Horizon Blue Metallic												■	■		
8N4	Constellation Blue Pearl			■	■	■										
8N7	Sailfin Blue Pearl			■	■					■						
8P2	Seafoam Blue Metallic	■														

* New colors for the 2000 model year.

TOYOTA

Technical Service BULLETIN

June 14, 2002

Title:

REFINISHING REPLACEMENT BUMPER COVERS

Models:

All '83 – '03 Models

TSB

PAINT

PA003-02

Introduction

In cases where a bumper cover is being replaced, a special preparation process is necessary to assure the refinish is customer acceptable. This bulletin provides the recommended refinishing procedure for new bumper covers.

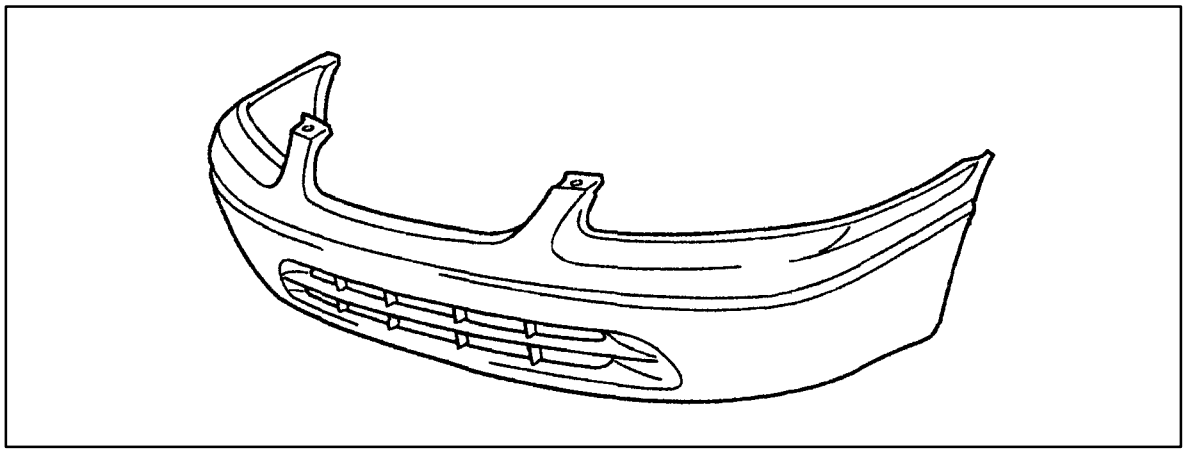

Applicable Vehicles

- **All 1983 – 2003** model year **Toyota** vehicles.

Required Tools & Material

TOOLS & MATERIALS	QUANTITY
Mild Soap — Ph neutral (no wax type)	3M™ Car Shampoo (or equivalent)
Sanding Pad	3M™ ScotchBrite (Gray) 37448
Sanding Paste	See Paint Manufacturer's Recommendations
Wax, Grease, & Silicone Remover	
Plastic Part Adhesion Promoter	
Primer and Paint	

Warranty Information

OP CODE	DESCRIPTION	TIME	OPN	T1	T2
N/A	Not Applicable to Warranty	–	–	–	–

Refinishing Procedure

1. Mix a solution of mild soap (car wash soap with no wax additives) and clean water.

NOTE:

Carefully follow mixing instructions on the soap container. Too much soap or too much water may cause surface contamination or rinsing difficulty.

Refinishing Procedure (Continued)

2. **Scrub** the bumper covers with the soap and water solution, making sure all difficult–to–reach areas are thoroughly cleaned.
3. Rinse the entire bumper cover with clean deionized water, making sure all difficult–to–reach areas are thoroughly rinsed.
4. Dry the surface with a clean towel before water dries on the surface. Clean, dry compressed air from an oil–less compressor may be substituted for drying with a towel.
5. Degrease the surface with a wax, grease, and silicone remover.

NOTE:

Lacquer thinner or brake cleaner will NOT remove silicone. You MUST use a wax, grease, and silicone remover. Carefully follow application instructions on the container label. Fish eyes or other paint irregularities may result from not following instructions.

6. Apply a generous amount of sanding paste with a gray 3M™ ScotchBrite pad. Only a gray pad should be used during the sanding process. Sand the entire bumper cover surface. Be sure all difficult–to–reach areas are thoroughly sanded.
7. Clean the entire bumper cover with car wash soap and water. Be sure all difficult–to–reach areas are thoroughly cleaned.
8. Rinse the entire bumper with clean deionized water. Be sure all difficult–to–reach areas are thoroughly rinsed.
9. Degrease the surface with an anti–static plastic parts cleaner and a white body shop towel or paper towel.

NOTE:

Never use a red shop towel to wipe the surface (contains silicone).

10. Assure the bumper is firmly held in place to a steady fixture.
11. Apply a plastic parts adhesion promoter to the surface, according to the manufacturer's recommendations.
12. Apply plastic parts primer to the surface, according to the paint manufacturer's recommendations.
13. Since bumpers are made of flexible plastic urethane material, use a two–part urethane finish paint system with plasticizer (flex agent) for all bumper and cladding repairs. Apply the appropriate top coat to the surface, according to the paint manufacturer's recommendations.
14. If heat is applied to cure the paint, assure the surface temperature does not exceed 80°C (176°F.)

For additional information concerning the refinish process for plastic bumpers/cladding, please contact your respective refinish paint manufacturer's local representative.

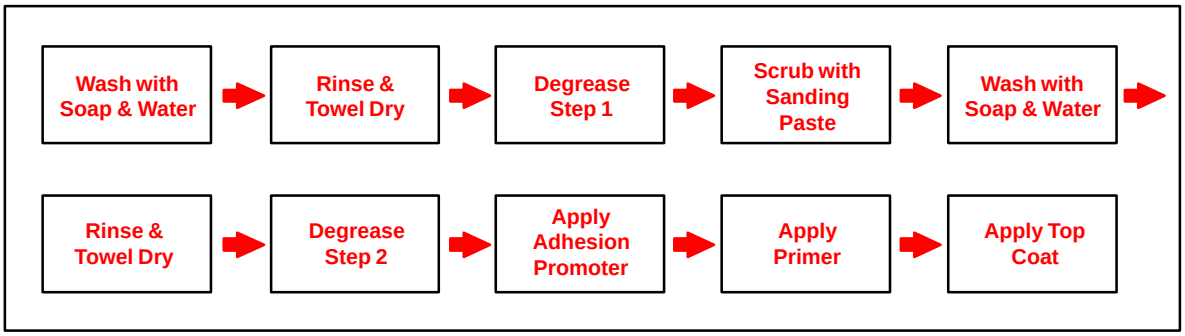

TOYOTA
SCION
Technical Service BULLETIN
November 16, 2004

Title:

IRON PARTICLE RUST CONTAMINATION REPAIR

Models:

'94 – Current Toyota & '04 – Current Scion

TSB

PAINT
PA005-04
REVISED

TSB REVISION NOTICE:

- **December 16, 2004: Text has been revised to more accurately describe cleaner (Auto Magic® Special Cleaner Concentrate™ is not an oxalic acid solution); Applicable Vehicles has been defined more clearly.**

The previous TSB should be discarded.

Introduction

The purpose of this bulletin is to provide information regarding the proper procedures to clean vehicles that may have been subjected to contamination by airborne iron particles such as rail dust.

Applicable Vehicles

- **1994 – Current** model year **Toyota** vehicles.
- **2004 – Current** model year **Scion** vehicles.

Condition

During rail transportation or extended storage near industrial areas, vehicles may occasionally be subjected to contamination by airborne iron particles shed from railroad tracks, train wheels, exposure to heavy machinery facilities, grinding, welding, etc.

Inspection

This type of contamination can be identified by the presence of small red or brown particles on the paint surface. These particles are often difficult to see on dark color paints, but can be easily felt when brushing a hand across horizontal body surfaces such as hood, roof, or deck lid.

CAUTION:

Because of the abrasiveness of these small iron particles, polishing or buffing procedures should not be attempted to repair the paint surface of an affected vehicle. This will result in further paint damage and detract from vehicle appearance.

Repair

Washing the affected paint surfaces with Auto Magic® Special Cleaner Concentrate™ is the recommended method to dislodge embedded iron particles and remove the surrounding rust stains. The correct usage of Auto Magic® Special Cleaner Concentrate™ is described in this bulletin.

Warranty Information

OP CODE	DESCRIPTION	TIME	OFP	T1	T2
N/A	Not Applicable to Warranty	–	–	–	–

Required Tools & Materials

TOOLS & MATERIALS	QUANTITY
Auto Magic® Special Cleaner Concentrate™ #713*	1
Rubber Gloves, Aprons, Boots	As Needed
Eye Protection	
Sponges or Wash Mitts	
Pail or Bucket	

* Contact the main office of Auto Wax Company Inc. (1–800–826–0828 or www.automagic.biz) to find a local source for Auto Magic® Special Cleaner Concentrate.™

General Precautions

WARNING:

Auto Magic® Special Cleaner Concentrate™ is a corrosive material. Appropriate personal protection equipment must be worn to protect persons performing the contamination removal procedure. Please refer to the precautions on the product prior to use.

CAUTION:

Consult local or state regulations regarding the handling, use, and disposal of Auto Magic® Special Cleaner Concentrate™ prior to use.

Under no circumstances should contamination removal be performed in direct sunlight or contamination removal solution be allowed to dry on vehicle surfaces, as staining of plastic, rubber, or painted parts may result.

Repair Procedure

1. Move vehicle out of direct sunlight. Initially rinse with cool water then wash with liquid car wash detergent. Rinse again thoroughly with fresh water.

2. Dilute the mixture to a 1:8 ratio for painted surfaces. Use the recommended dilution ratio when applying to any other surface. Apply the diluted cleaner so that it evenly covers the affected area. Use an appropriate mitt or sponge to agitate the surface.

3. Thoroughly rinse vehicle with fresh water.

4. Inspect vehicle carefully both visually and by feel to determine if all iron particles have been removed. Repeat the wash several times if necessary to achieve complete removal.

5. Dry vehicle with a soft terry cloth towel and apply a non–abrasive, non–silicone glaze to obtain a high–gloss finish.

TOYOTA

Technical Service BULLETIN

January 23, 2003

Title:

1995 - 2003 GRAY BUMPER PAINT CODES

Models:

'95 – '03 Tacoma & '00 – '03 Tundra

TSB

Introduction

Following are color codes for gray painted steel bumpers installed on the 1995 – 2003 model year Tacoma and 2000 – 2003 model year Tundra. These bumpers are factory installed, usually on base trim level models.

Applicable Vehicles

- **1995 – 2003** model year **Tacoma** vehicles.
- **2000 – 2003** model year **Tundra** vehicles.

Parts Information

MODEL	MODEL YEAR	FRONT GRAY BUMPER COLOR CODE	REAR GRAY BUMPER* COLOR CODE
Tacoma	1995 – 2000	11GY04	N/A
	2000 – 2003	11GY21	11GY21
Tundra	2000 – 2002	11GY21	11GY21
	2003	A83	

* Color codes are for factory installed rear bumper (not accessory bumpers).

Warranty Information

OP CODE	DESCRIPTION	TIME	OFP	T1	T2
N/A	Not Applicable to Warranty	–	–	–	–

TOYOTA

Technical Service BULLETIN

January 7, 2000

Title:

2000 TECHNICAL SERVICE BULLETIN INFORMATION

Models:

All Models

TSB

PG001–00

PRODUCT GENERAL INFORMATION

Introduction

Toyota Technical Service Bulletins (TSBs) continue to be one of the most current sources of technical information available. To ensure complete access to this reference source, use the following steps:

- All 1999 Technical Service Bulletins should be relocated to a temporary binder.
- Place this bulletin along with all 2000 TSBs into the emptied TSB binder.
- During the month of March, all dealers will receive bound books containing all TSBs issued in 1999. Upon receipt, discard all 1999 TSBs and refer only to the bound book for reference.
- Additional copies of 1994 through 2000 TSBs are available to all Toyota dealerships through the Toyota Non–Parts System (MDC NPM System) by using the following Part Number designation:

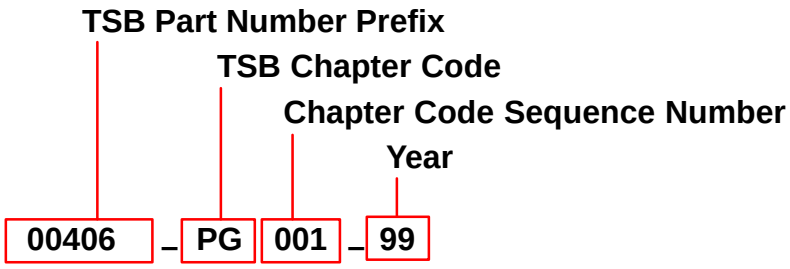

Parts Information

MATERIAL DESCRIPTION	PART NUMBER
TSB Binder, tabs and all 2000 bulletins issued to date	TSB00
New TSB Binder and tabs **ONLY**	00406–61012
1999 TSB Bound Book	00442–99002*
1998 TSB Bound Book	00442–98005
1997 TSB Bound Book	00442–97011
1996 TSB Bound Book	00442–97003
1995 TSB Bound Book	00401–43055

* Available in March, 2000.

NOTE:

If you have any questions concerning Toyota Technical Service Bulletins, please contact your District Service Manager.

TOYOTA

Technical Service BULLETIN

February 28, 2003

Title:

REPAIR MANUAL CORRECTIONS INDEX

Models:

All Models

TSB

PG001-03

PRODUCT GENERAL INFORMATION

Introduction

Corrections have been made in the repair manuals listed below. Corrections available in the last quarter are marked in **red**. The Toyota Technical Information system (TIS) is the best way to access up–to–date service information.

> **NOTE:**
> **When ordering a technical publication (i.e., Repair Manual, Electrical Wiring Diagram) from the MDC, any Correction Page(s) associated with that particular Publication will automatically be included with your order.**

Parts Information

Correction Pages are available through the Dealer Support Material Network (MDC NPM System) via the corresponding part numbers from the following table.

	Publication	Number	Page(s)	Part Number
4Runner	2003 4Runner	RM1001–U1	03–36	00400–RM100–12131
		RM1001–U2	29–6	↓
			29–23	↓
			25–18	00400–RM100–22146
			26–3	↓
			26–17	↓
			27–6	↓
			27–9	↓
			27–29	↓
			27–31	↓
			27–32	↓
			27–34	↓
			27–36	↓
			27–37	↓
		RM1001–U1	05–614 to 05–616	00400–RM100–12156
			05–712	↓
			05–713	↓
			05–713–1 to 05–713–7	↓
			05–724 to 05–737	↓
			05–811 to 05–813	↓

	Publication	Number	Page(s)	Part Number
Avalon	2000 Avalon	RM746–U2	BE–3	00400–RM746–2167B
			BE–4	↓
			BE–5	↓
			BE–6	↓
	2001 Avalon	RM808–U2	BE–3	00400–RM808–2166B
			BE–4	↓
			BE–5	↓
			BE–6	↓
	2002 Avalon	RM872–U2	BE–96	00400–RM872–2088B
			BE–3	00400–RM872–2165B
			BE–4	↓
			BE–5	↓
			BE–6	↓
Camry	2002 Camry	EWD461U	45	00400–EWD46–12107
			77	↓
			89	↓
			317	↓
			M5	↓
			M6	↓
	2003 Camry	EWD506U	45	00400–EWD50–62108
			77	↓
			89	↓
			319	↓
			M5	↓
			M6	↓
Corolla	2003 Corolla	EWD484U	49	00400–EWD48–42150
Highlander	2001 Highlander	RM837–U2	11–15	00400–RM837–2140B
			11–16	↓
			11–30	↓
			11–31	↓
	2002 Highlander	RM918–U2	11–15	00400–RM918–2141B
			11–16	↓
			11–30	↓
			11–31	↓
	2003 Highlander	RM987–U2	11–13	00400–RM987–2157B
			11–14	↓
			11–14–1	↓
			11–14–2	↓
			11–26	↓
			11–27	↓
			11–27–1	↓

	Publication	Number	Page(s)	Part Number
Matrix	2003 Matrix	EWD486U	55	00400–EWD48–62151
		RM940–U1	05–833	00400–RM940–2116
			05–834	↓
			05–820	00400–RM940–2159
			05–821	↓
			05–825	↓
			05–826	↓
			05–829	↓
			05–830	↓
			05–837	↓
			05–840	↓
		RM940–U2	73–9	00400–RM940–2163B
MR2 Spyder	2001 MR2 Spyder	RM801–U1	DI–8	00400–RM801–2105
			DI–9	↓
			DI–150	↓
			DI–151	↓
			DI–152	↓
			DI–153	↓
			DI–183	↓
			DI–184	↓
			DI–184–1	↓
			DI–184–2	↓
	2002 MR2 Spyder	RM900–U1	DI–8	00400–RM900–2106
			DI–9	↓
			DI–151	↓
			DI–152	↓
			DI–153	↓
			DI–154	↓
			DI–184	↓
			DI–185	↓
			DI–186	↓
			DI–187	↓
		RM900–U2	BO–46	00400–RM900–2137
Prius	2001 Prius	RM778–U1	DI–680	00400–RM778–2095
	2002 Prius	RM883–U1	DI–687	00400–RM883–2096
	2003 Prius	RM957–U1	DI–687	00400–RM957–2097

	Publication	Number	Page(s)	Part Number
Sequoia	2003 Sequoia	RM959–U1	DI–304	00400–RM959–12128
			DI–312	↓
			DI–313	↓
			DI–321	↓
			DI–325	↓
			DI–326	↓
			DI–330 to DI–333	↓
			DI–335	↓
			DI–340	↓
			DI–347	↓
			DI–357	↓
			DI–358	↓
			DI–360 to DI–362	↓
			DI–372	↓
			DI–373	↓
			DI–377	↓
			DI–377–1	↓
Sienna	2001 Sienna	EWD420U	37	00400–EWD42–2121
			64	↓
			267	↓
			M2	↓
	2002 Sienna	EWD454U	37	00400–EWD45–2122
			64	↓
			271	↓
			M2	↓
	2003 Sienna	EWD490U	37	00400–EWD49–02123
			64	↓
			271	↓
			M2	↓
Tacoma	2002 Tacoma	RM921–U1	DI–510	00400–RM921–2089
Tundra	2000 Tundra	EWD367U	129	00400–EWD36–72133
			222	↓
			M28	↓
	2001 Tundra	EWD429U	121	00400–EWD42–92134
			208	↓
			M26	↓
	2002 Tundra	EWD468U	121	00400–EWD46–82135
			208	↓
			M26	↓

TOYOTA

Technical Service BULLETIN

December 31, 2000

Title:

REPAIR MANUAL CORRECTIONS INDEX

Models:

All Models

TSB

REVISED

PG002–00

PRODUCT GENERAL INFORMATION

Introduction

Corrections have been made in the repair manuals listed below. Corrections available in the last quarter are marked in **red**, and have already been mailed to all dealers.

NOTE:
When ordering a technical publication (i.e. Repair Manual, Electrical Wiring Diagram) from the MDC, and Correction Page(s) associated with that particular Publication will automatically be included with your order.

Parts Information

Correction Pages are available through the Dealer Support Material Network (MDC NPM System) via the corresponding part numbers from the following table:

	Publication	Number	Page(s)	Part Number
Avalon	2001 Avalon	RM746–U1	DI–259	00400–RM746–Z107
			DI–260	↓
			DI–311	↓
			DI–312	↓
			DI–314	↓
			DI–316	↓
			DI–317–1	↓
			DI–317–2	↓
Celica	2000 Celica	RM744–U1	SS–45	00400–RM744–9094A
			SS–47	↓
			SS–52	↓
		RM744–U2	SA–02	00400–RM744–9094B
			SA–41	↓
			SA–44	↓
			SR–33	↓
			SR–51	↓
			EM–4	00400–RM744–Z066
			EM–5	↓
			EM–6	↓
			EM–7	↓
			EM–9	↓
			EM–10	↓
			EM–11	↓
			EM–12–1	↓
			SF–10	00400–RM744–Z130
			SF–12	↓
			SF–13	↓
			SF–15	↓

	Publication	Number	Page(s)	Part Number
Celica (Continued)	2001 Celica	RM818–U2	SF–10	00400–RM818–Z130
			SF–12	↓
			SF–13	↓
			SF–15	↓
ECHO	2000 ECHO	RM750–U	BR–16	00400–RM591–8121
			BR–27	↓
			BR–28	↓
			BR–31	↓
			PP–50	00400–RM591–8063
			SS–37	↓
			SS–38	↓
			BR–32	00400–RM750–Z140
	2001 ECHO	RM816–U	BR–32	00400–RM816–Z140
Highlander	2001 Highlander	EWD442–U	239	00400–EWD44–2Z149
			266	↓
Land Cruiser	2000 Land Cruiser	RM722–U1	DI–305	00400–RM722–Z018
			DI–306	↓
			DI–307	↓
			DI–308	↓
			SS–30	00400–RM722–9093A
			SS–31	↓
		RM722–U2	SA–3	00400–RM722–9093B
			SA–37	↓
			SA–40	↓
			SA–41	↓
			SA–42	↓
			SA–43	↓
			SA–44	↓
			SA–46	↓
			SA–47	↓
			SA–48	↓
			SA–49	↓
			SA–50	↓
			SA–52	↓
			SA–53	↓
			SA–54	↓
			SA–55	↓
			SA–56	↓
			SA–57	↓
			BR–10	00400–RM722–Z038
MR2 Spyder	2000 MR2	RM760–U	BR–8	00400–RM760–Z141
	2001 MR2	RM801–U	BR–8	00400–RM801–Z141

	Publication	Number	Page(s)	Part Number
Prius	2001 Prius	BRM09–6E	BP–17	00400–BRM09–6Z112
			BP–18	↓
			BP–33	↓
			BP–48	↓
			BP–49	↓
			BP–54	↓
			BP–55	↓
			PC–2	↓
		RM778–U1	DI–105	00400–RM778–Z093
			DI–106	↓
			SS–21	00400–RM778–Z123
			DI–504	↓
			DI–593–1	↓
			DI–593–2	↓
			DI–593–3	↓
			HV–22	↓
			DI–661	00400–RM778–Z120A
			DI–661–1	↓
			DI–665	↓
			DI–666	↓
			DI–670	↓
			DI–671	↓
		RM778–U2	BE–22	00400–RM778–Z151
			BE–23	↓
			BE–44	00400–RM778–Z120B
			BE–46–1	↓
RAV4	1996 RAV4	RM447–U	SA–62	00400–RM447–Z071
	1997 RAV4	RM505–U	SA–66	00400–RM505–Z071
	1998 RAV4	RM595–U	SA–79	00400–RM595–Z071
	1999 RAV4	RM668–U2	SA–79	00400–RM668–Z071
	2000 RAV4	RM711–U2	SA–79	00400–RM711–Z071
	2001 RAV4	RM797–U1	DI–489	00400–RM797–Z096
			SS–42	00400–RM797–Z106A
		RM797–U2	SA–5	00400–RM797–Z106B
			SA–7	↓
			SA–69	00400–RM797–Z071
Sequoia	2001 Sequoia	RM832–U1	SS–31	00400–RM832–Z139
Sienna	1998 Sienna	RM594–U	SR–37	00400–RM594–9095
			SR–47	↓
			SR–48	↓
	1999 Sienna	RM657–U	SR–37	00400–RM657–9095
			SR–47	↓
			SR–48	↓

	Publication	Number	Page(s)	Part Number
Sienna (Continued)	2000 Sienna	RM701–U	SR–37	00400–RM701–9095
			SR–47	↓
			SR–48	↓
			DI–387	00400–RM701–Z121
			DI–388	↓
			DI–389	↓
			DI–389–1	↓
			DI–389–2	↓
			DI–389–3	↓
Tacoma	1998 Tacoma	RM576–U1	DI–349	00400–RM576–Z105
			DI–350	↓
	1998 Tacoma Suppl.	RM614–U	PP–8	00400–RM614–9123
			PP–9	↓
			SA–8	↓
			SA–10	↓
			SA–11	↓
			SS–8	↓
	1999 Tacoma	RM673–U1	SS–72	00400–RM673–9123A
			DI–373	00400–RM673–Z105
			DI–374	↓
		RM673–U2	SA–23	00400–RM673–9123B
			SA–26	↓
			SA–28	↓
	2000 Tacoma	RM712–U1	SS–73	00400–RM712–9123A
			DI–415	00400–RM712–Z105
			DI–416	↓
		RM712–U2	SA–23	00400–RM712–9123B
			SA–26	↓
			SA–28	↓
	2001 Tacoma	RM835–U1	DI–340	00400–RM835–Z105
			DI–341	↓
Tundra	2000 Tundra	RM682–U2	TR–43	00400–RM682–Z055
			TR–44	↓
			TR–45	↓

TOYOTA

Technical Service BULLETIN

September 30, 2002

Title:

REPAIR MANUAL CORRECTIONS INDEX

Models:

All Models

TSB

REVISED

PG002-02

PRODUCT GENERAL INFORMATION

Introduction

Corrections have been made in the repair manuals listed below. Corrections available in the last quarter are marked in **red**, have already been mailed to all dealers, and are updated in TIS.

> **NOTE:**
> **When ordering a technical publication (i.e., Repair Manual, Electrical Wiring Diagram) from the MDC, any Correction Page(s) associated with that particular Publication will automatically be included with your order.**

Parts Information

Correction Pages are available through the Dealer Support Material Network (MDC NPM System) via the corresponding part numbers from the following table.

	Publication	Number	Page(s)	Part Number
4Runner	2001 4Runner	RM796–U1	DI–477	00400–RM796–2086
	2002 4Runner	EWD471–U	158	00400–EWD471–2050
		RM887–U1	DI–487	00400–RM887–2087
Avalon	2002 Avalon	EWD45–3U	258	00400–EWD45–32038
			21	↓
		RM872–U1	DI–232	00400–RM872–2054
			DI–530	00400–RM872–2052
Camry	1998 Camry	RM589–U2	BE–64	00400–RM589–2005B
			BE–65	↓
			BE–66	↓
	1999 Camry	RM654–U2	BE–65	00400–RM654–2005B
			BE–66	↓
			BE–67	↓
	2000 Camry	RM742–U2	BE–65	00400–RM742–2005B
			BE–66	↓
			BE–67	↓
	2001 Camry	RM819–U2	BE–66	00400–RM819–2005B
			BE–67	↓
			BE–68	↓

	Publication	Number	Page(s)	Part Number
Camry (Continued)	2002 Camry	EWD46–1U	77	00400–EWD46–12039
		RM881–U1	05–418	00400–RM881–2054
			05–1230	00400–RM881–2077
		RM881–U2	73–8	00400–RM881–2060B
			73–9	↓
			73–10	↓
Celica	2000 Celica	RM744–U1	DI–510	00400–RM744–2074
	2001 Celica	RM818–U1	DI–511	00400–RM818–2075
	2002 Celica	RM902–U1	DI–514	00400–RM902–2076
Corolla	2003 Corolla	RM938–U1	05–169	00400–RM938–2054
ECHO	2000 ECHO	RM750–U	BE–66	00400–RM750–2011
			BE–66–1	↓
	2001 ECHO	RM816–U	BE–66	00400–RM816–2011
			BE–66–1	↓
	2002 ECHO	RM884–U	BE–66	00400–RM884–2011
			BE–66–1	↓
Highlander	2002 Highlander	RM918–U1	05–919	00400–RM918–2053
		RM918–U2	82–4	00400–RM918–2058B
			82–5	↓
Land Cruiser	1998 Land Cruiser	RM615–U2	BE–80	00400–RM615–2006B
			BE–81	↓
	1999 Land Cruiser	RM661–U2	BE–82	00400–RM661–2006B
			BE–83	↓
	2000 Land Cruiser	RM722–U2	BE–82	00400–RM722–2006B
			BE–83	↓
	2001 Land Cruiser	RM795–U2	BE–91	00400–RM795–2006B
			BE–92	↓
			BE–93	↓
	2002 Land Cruiser	RM893–U2	BE–91	00400–RM893–2006B
			BE–92	↓
			BE–93	↓
Prius	2001 Prius	RM778–U1	DI–654	00400–RM778–2072
	2002 Prius	RM883–U1	DI–669	00400–RM883–2073

	Publication	Number	Page(s)	Part Number
RAV4	2001 RAV4	RM797–U1	DI–450	00400–RM797–2084
		RM797–U2	BE–63	00400–RM797–2012B
			BO–9	00400–RM797–2040B
			BO–10	↓
			BO–11	↓
			BO–11–1	↓
	2002 RAV4	RM891–U1	DI–450	00400–RM891–2085
		RM891–U2	BE–64	00400–RM891–2012B
			BO–9	00400–RM891–2040B
			BO–10	↓
			BO–11	↓
			BO–11–1	↓
Sequoia	2002 Sequoia	RM886–U1	DI–253	00400–RM886–2054
Sienna	1998 Sienna	RM594–U	BE–59	00400–RM594–2013
	1999 Sienna	RM657–U	BE–60	00400–RM657–2013
	2000 Sienna	RM701–U	BE–60	00400–RM701–2013
Solara	2002 Solara	RM882–U1	DI–446	00400–RM882–2054
Tacoma	2002 Tacoma	EWD478–U	71	00400–EWD–2051
			4	↓
Tundra	2002 Tundra	RM885–U1	DI–371	00400–RM885–2054

TOYOTA

Technical Service BULLETIN

May 18, 2004

Title:

REPAIR MANUAL CORRECTIONS INDEX

Models:

All Models

TSB

PG003-04

PRODUCT GENERAL INFORMATION

Introduction

Correction pages are available for the service publications listed below. This bulletin summarizes service publication content changes that have been released between February 2003 and March 2004. These changes have already been implemented in the Toyota Technical Information System (TIS). For the most accurate service information content, technicians are strongly encouraged to refer to TIS (*http://tis.toyota.com*). Internet access is also available to Toyota service information content by subscription (*http://techinfo.toyota.com*).

NOTE:

Inventory quantities of printed correction pages are limited, and part numbers are obsolete when supplies are exhausted. When ordering a technical publication (i.e., Repair Manual, Electrical Wiring Diagram) from the MDC, any correction page(s) associated with that particular publication which were published at the time of purchase will automatically be included with your order.

Parts Information

Correction pages may be ordered from the Materials Distribution Center (MDC) through Dealer Daily or by calling the MDC at 1–800–622–2033 using the corresponding part numbers from the following table.

	Publication	Number	Page(s)	Part Number
4Runner	2002 4Runner	RM887–U2	BE–18, BE–19	00400–RM887–3043B
	2003 4Runner	RM1034–U	14–31, 14–70, 14–85	00400–RM103–2174
		RM1001–U1	02–32 to 02–34	00400–RM100–3110
			05–816, 05–817,	00400–RM100–3162
			05–817–1, 05–817–2	↓
			03–46, 05–449	00400–RM100–3194
		RM1001–U2	11–21–1 to 11–21–4	00400–RM100–2172B
			27–15, 27–16	00400–RM100–3025B
			73–23, 73–26	00400–RM100–3103B
			30–38	00400–RM100–3110B
			27–7, 27–30, 27–35	00400–RM100–3239B
Avalon	2002 Avalon	RM872–U2	BE–23, BE–24	00400–RM872–3080B
	2003 Avalon	EWD487–U	209	00400–EWD48–3183
		RM953–U2	BE–4 to BE–6	00400–RM953–2164B
			BE–102 to BE–105	00400–RM953–2196B
			BE–23, BE–24	00400–RM953–3088B

	Publication	Number	Page(s)	Part Number
Camry	1997 Camry	RM503–U2	BE–69	00400–RM503–2218B
	2000 Camry	RM742–U2	BE–70	00400–RM742–2221B
	2002 Camry	EWD461–U	38, 78, 289,	00400–EWD46–2181
			Overall M:5 (cont'd)	↓
		RM881–U1	05–894, 05–895,	00400–RM881–3158
			05–895–1, 05–895–2	↓
		RM881–U2	12–10, 12–20	00400–RM881–3086B
			14–57	00400–RM881–3142B
			33–3, 33–7, 33–14	00400–RM881–3245B
	2003 Camry	RM972–U1	05–1008, 05–1009,	00400–RM972–3160
			05–1009–1, 05–1009–2	↓
		RM972–U2	73–8	00400–RM972–2183B
			12–9, 12–19	00400–RM972–3087B
			14–54	00400–RM972–3141B
			33–3, 33–7, 33–14	00400–RM972–3246B
		RM1026–U	73–1, 73–4	00400–RM102–3101
Celica	2004 Celica	RM1066–U1	DI–380	00400–RM106–3307
Corolla	2003 Corolla	RM938–U1	05–484 to 05–487	00400–RM938–2160
			05–421, 05–422,	00400–RM938–3155
			05–422–1, 05–422–2	↓
			05–40 to 05–42,	00400–RM938–3236
			05–112, 05–113	↓
ECHO	2002 ECHO	RM884–U	DI–108	00400–RM884–3203
	2003 ECHO	RM984–U	DI–154	00400–RM984–3204
Highlander	2002 Highlander	RM918–U1	05–943, 05–962–1	00400–RM918–3108B
			05–710, 05–711,	00400–RM918–3156
			05–711–1, 05–711–2	↓
			03–47	00400–RM918–3232
			32–24, 32–28	00400–RM918–3232B
		RM918–U2	14–56	00400–RM918–3144B
	2003 Highlander	RM987–U1	05–1028, 05–1047–1	00400–RM100–3109
			05–788, 05–789,	00400–RM987–3153
			05–789–1, 05–789–2	↓
			03–47	00400–RM987–3233
		RM987–U2	73–11	00400–RM987–2184B
			14–51	00400–RM881–3143B
Land Cruiser	1999 Land Cruiser	RM661–U2	BE–28, BE–29	00400–RM661–3057B
	2002 Land Cruiser	RM893–U2	BE–28, BE–29	00400–RM722–3060B

	Publication	Number	Page(s)	Part Number
Land Cruiser (Continued)	2003 Land Cruiser	EWD510–U	71, 84, 85, 96, 97,	00400–EWD51–2195
			244, 245, 383, 387,	↓
			388, 396, Overall M:24	↓
		RM966–U1	SS–23	00400–RM966–3195
		RM966–U2	BE–95	00400–RM966–2185B
			BE–34, BE–35	00400–RM966–3061B
Matrix	2003 Matrix	RM940–U1	05–710, 05–711,	00400–RM940–3154
			05–711–1, 05–711–2	↓
			05–89, 05–95,	00400–RM940–3275
			05–241, 05–247	↓
		RM940–U2	65–7	00400–RM940–2205B
MR2 Spyder	2001 MR2 Spyder	EWD424–U	61, Overall M:2	00400–EWD42–2214
		RM801–U	DI–180 to DI–188,	00400–RM801–2192
			DI–188–1, DI–188–2	↓
	2002 MR2 Spyder	RM900–U	BR–17	00400–RM900–1143
			DI–189	00400–RM900–2190
	2003 MR2 Spyder	RM967–U1	DI–245	00400–RM967–2189
			SS–35	00400–RM967–3006
			DI–121, DI–128,	00400–RM967–3278
			DI–134, DI–156	↓
		RM967–U2	SA–3, SA–5, SA–7	00400–RM967–3006B
Prius	2001 Prius	RM778–U1	DI–671	00400–RM778–2095R
	2002 Prius	RM883–U1	DI–762, 766 to 769,	00400–RM883–2224
			774, 777 to 780, 782,	↓
			785 to 792, 794, 796	↓
			DI–337 to DI–344	00400–RM883–3241
	2003 Prius	RM957–U1	DI–762, 766 to 769,	00400–RM957–2223
			774, 777 to 780, 782,	↓
			785 to 792, 794, 796	↓
			DI–337 to DI–344	00400–RM957–3242
	2004 Prius	EWD555–U	20, 22, 23, 194,	00400–EWD55–3296
			293, 297, 306, 343,	↓
			Overall 4–1, 11–5	↓
RAV4	2002 RAV4	RM891–U1	DI–18	00400–RM891–3091
		RM891–U2	BR–21	00400–RM891–1142B
Sequoia	2002 Sequoia	RM886–U1	IN–17	00400–RM886–3309
		RM886–U2	BE–54	00400–RM886–3096B
	2003 Sequoia	EWD495–U	37, 246, Overall M:24	00400–EWD49–2213
			199, Overall M:15–4	00400–EWD49–5U
		RM959–U1	PP–55	00400–RM959–2125
			DI–605	00400–RM959–2179

	Publication	Number	Page(s)	Part Number
Sequoia (Continued)	2003 Sequoia	RM959–U1	DI–600, DI–602 to	00400–RM959–2204
			DI–605, DI–608 to DI–610	↓
			DI–308, DI–328	00400–RM959–2206
			PP–52	00400–RM959–3137
			DI–329	00400–RM959–3179
			DI–128, DI–129,	00400–RM959–3271
			DI–135, DI–136, DI–142,	↓
			DI–143, DI–163, DI–164	↓
			PP–35	00400–RM959–3228
			SS–38	00400–RM959–3260
			IN–17	00400–RM959–3310
			DI–300, DI–304,	00400–RM959–3311
			DI–404	↓
		RM959–U2	SA–98	00400–RM959–2125B
			BE–140	00400–RM959–2179B
			SR–12, BE–24	00400–RM959–2206B
			BE–58	00400–RM959–3094B
			SA–90	00400–RM959–3137B
	2004 Sequoia	EWD541–U	199, Overall M:15–4	00400–EWD54–3214
		RM1089–U1	IN–17	00400–RM108–3312
			DI–446, DI–450,	00400–RM108–3313
			DI–550	↓
Sienna	2002 Sienna	RM871–U2	BE–23, BE–24	00400–RM871–3081B
			SR–3	00400–RM871–3132B
	2003 Sienna	EWD490–U	193	00400–EWD49–3208
		RM954–U2	SR–3	00400–RM954–3133B
			BE–23, BE–24	00400–RM954–3082B
	2004 Sienna	EWD524–U	96, 97, 126,	00400–EWD52–3184
			127, Overall M:1	↓
		RM1025–U1	05–304, 05–355,	00400–RM102–3126
			05–359	↓
			05–865, 05–866,	00400–RM102–3163
			05–866–1, 05–866–2	↓
		RM1025–U2	73–23, 73–26	00400–RM102–3102B
			14–1	00400–RM102–3134B
			28–2, 28–3, 28–4	00400–RM102–3135B
			82–3 to 82–6,	00400–RM102–3186B
			82–6–1, 82–6–2	↓
Solara	2003 Solara	RM955–U1	DI–287	00400–RM955–3219
	2004 Solara	EWD554–U	168 to 170,	00400–EWD554–3294
			Overall M:15–1	↓

	Publication	Number	Page(s)	Part Number
Tacoma	2002 Tacoma	RM921–U2	BE–40	00400–RM921–3084B
		RM921–U1	DI–323	00400–RM921–3218
	2003 Tacoma	RM1002–U2	BE–40	00400–RM100–3085B
Tundra	2002 Tundra	RM885–U2	BE–52 to BE–56	00400–RM885–3105B
	2003 Tundra	EWD491–U	139, 240, Overall M:30 ↓	00400–EWD49–12136
			31, 33, 235, 261, Overall M:29 ↓	00400–EWD49–2216
			176, Overall M:18–5	00400–EWD49–3210
		RM956–U1	SS–79	00400–RM956–3258
			DI–115, DI–117, DI–316, DI–318 ↓	00400–RM956–3282
		RM956–U2	BE–57 to BE–60	00400–RM956–3106B
	2004 Tundra	EWD567–U	230, 446, Overall M:19–5, M:49–4 ↓	00400–EWD56–3209
			21, 94, 210, 515	00400–EWD56–3298

TOYOTA

Technical Service BULLETIN

March 31, 2000

Title:

CA/50 STATE CERTIFIED EMISSION CONTROL UNDERHOOD LABEL ORDERING

Models:

All Models

TSB

Introduction

It is no longer necessary to fax the CA/50 State Emission Label Order Form to TMS. California (CA) and 50 State Certified underhood emission control labels (emission labels) may now be obtained through your dealership Parts Department utilizing standard replacement parts ordering procedures via the TDN. Follow the guidelines outlined in this TSB to ensure proper label application.

Applicable Vehicles

- **All** model year **Toyota Vehicles.**
  We have included tables reflecting 1997 – 2000 MY CA and 50 State Emission Label part number information for your convenience. Please continue to consult the Electronic Parts Catalog (EPC) or the parts microfiche for information regarding other model years as well as Federal Emission label part numbers.

NOTE:

Although the California Smog Impact Fee has been discontinued, dealers are still required by regulation to verify the correct emission label is installed on the correct vehicle.

REGULATIONS:

The United States Clean Air Act, Title II, Sections 202, 203, 205, and 207 mandates that the emission control label must correctly match the emissions equipment on the vehicle. Any person violating this requirement is subject to applicable State penalties and a Federal civil penalty of no more than $25,000 for each instance.

Personnel at franchised dealerships are authorized to affix such labels to vehicles and are, therefore, subject to this regulation and the attendant penalties.

- **Do not sell the labels over the counter. Always install the label on the vehicle.**
- **Never install a California and/or 50 State Label on a vehicle that is not a California/50 State Emission Certified Vehicle.**
- **Do not install Federal Emission labels on vehicles that are not Federal Emissions Certified.**

Warranty Information

OP CODE	DESCRIPTION	TIME	OPN	T1	T2
N/A	Not Applicable to Warranty	–	–	–	–

Label Ordering Procedure

To ensure that the emission control labels are affixed to the correct vehicle, it is necessary to follow these procedures:

1. Record the Vehicle Identification Number (VIN) from the vehicle requiring a replacement label.

2. A dealership associate (must be assigned by Parts Manager), with authorized TDN access, must confirm the emissions equipment of the vehicle by referring to the following accessory codes:
   - **CA – California Certified**
   - **FE – 50 State Certified**
   - **RE – Federal Certified**
   - **CN – California and New York Certified**

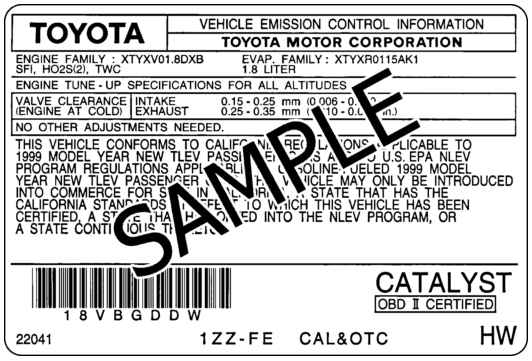

3. Once the emissions equipment information is verified, obtain the part number information by referring to the attached table for 1998 – 2000 MY vehicles or consulting the EPC/microfiche for other Toyota vehicles, including Federal Specification Vehicles.

4. Order the label through your Parts Department, using normal parts ordering procedures via the TDN.

5. When the part arrives, verify that the emission label matches the emissions equipment on the vehicle. This will ensure the correct label is affixed to the vehicle.

1997 MY CA/50 State Certified Emission Control Labels

MODEL	ENGINE NAME	TRANSMISSION	EMISSIONS*	PART NUMBERS
Tercel	5E–FE	All	USA	11298–11452
Paseo	5E–FE	All	CA	11298–11452
Corolla	4A–FE	All	CA	11298–1D060
	7A–FE	All	CA	11298–1D090
Celica	7A–FE	All	CA	11298–1D120
	5S–FE	All	CA	11298–7A390
Camry	5S–FE	M/TM	CA	11298–7A330
	5S–FE	A/TM	CA	11298–7A350
	1MZ–FE	All	CA	11298–20110
Supra	2JZ–GE	All	USA	11298–46121
	2JZ–GTE	All	USA	11298–46102
Avalon	1MZ–FE	A/TM	CA	11298–20110
Previa	2TZ–FZE	A/TM	USA	11298–76083
RAV4	3S–FE	All	CA	11298–7A410
4Runner	3RZ–FE (2WD)	All	USA	11298–75220
	3RZ–FE (4WD)	All	USA	11298–75260
	5VZ–FE	All	CA	11298–62450
Tacoma	2RZ–FE (2WD)	All	CA	11298–75210
	3RZ–FE (4WD)	M/TM	CA	11298–75200
	3RZ–FE (4WD)	All	USA	11298–75220
	5VZ–FE (2WD XtraCab)	All	USA	11298–62430
	5VZ–FE (4WD RegCab)	M/TM	USA	11298–62430
	5VZ–FE (4WD XtraCab)	All	CA	11298–62450
T–100	3RZ–FE (2WD)	All	USA	11298–75240
	5VZ–FE (2WD/4WD)	All	CA	11298–62500
Land Cruiser	1FZ–FE	A/TM	USA	11298–66070

* CA = California Emission Specification, USA = 50 State Emission Specification

1998 MY CA/50 State Certified Emission Control Labels

MODEL	ENGINE NAME	TRANSMISSION	EMISSIONS*	PART NUMBERS
Tercel	5E–FE	All	CA	11298–11453
Corolla	1ZZ–FE	All	CA	11298–22040
Celica	5S–FE	All	CA	11298–7A470
Camry	5S–FE	All	CA	11298–7A430
	1MZ–FE	A/TM	CA	11298–20160
	1MZ–FE	M/TM	CA	11298–20190
Supra	2JZ–GE	A/TM	CA	11298–46122
Avalon	1MZ–FE	A/TM	CA	11298–20160
Sienna	1MZ–FE	All	CA	11298–20140
RAV4	3S–FE	All	CA	11298–7A510
4Runner	3RZ–FE (2WD)	All	CA	11298–75320
	3RZ–FE (4WD)	All	CA	11298–75380
	5VZ–FE	All	CA	11298–62540
Tacoma	2RZ–FE (2WD)	All	CA	11298–75300
	3RZ–FE (4WD)	M/TM	CA	11298–75310
	3RZ–FE (4WD)	A/TM	CA	11298–75320
	5VZ–FE (2WD)	All	CA	11298–62530
	5VZ–FE (4WD XtraCab)	All	CA	11298–62540
T–100	3RZ–FE (2WD)	All	USA	11298–75360
	5VZ–FE (2WD/4WD)	All	CA	11298–62580
Land Cruiser	2UZ–FE	A/TM	CA	11298–50200

* CA = California Emission Specification, USA = 50 State Emission Specification

1999 MY CA/50 State Certified Emission Control Labels

MODEL	ENGINE NAME	TRANSMISSION	EMISSIONS*	PART NUMBERS
Corolla	1ZZ–FE	All	CA	11298–22041
Celica	5S–FE	All	CA	11298–7A560
Camry	5S–FE	All	CA	11298–7A521
	1MZ–FE	M/TM	USA	11298–20240
	1MZ–FE	A/TM	CA	11298–20181
Camry Solara	5S–FE	All	CA	11298–7A521
	1MZ–FE	M/TM	USA	11298–20240
	1MZ–FE	A/TM	USA	11298–20181
Avalon	1MZ–FE	All	CA	11298–20181
Sienna	1MZ–FE	A/TM	CA	11298–20270
RAV4	3S–FE (2WD/4WD)	All	CA	11298–7A541
4Runner	3RZ–FE (2WD/4WD)	All	USA	11298–75400
	5VZ–FE (2WD/4WD)	All	CA	11298–62660
Tacoma	2RZ–FE (2WD)	All	USA	11298–75460
	3RZ–FE (PreRunner/4WD)	A/TM	USA	11298–75470
	3RZ–FE (4WD)	M/TM	CA	11298–75480
	3RZ–FE (2WD XtraCab)	A/TM	USA	11298–75400
	5VZ–FE (2WD XtraCab)	All	USA	11298–62590
	5VZ–FE (PreRunner/4WD)	All	USA	11298–62600
Land Cruiser	2UZ–FE	A/TM	USA	11298–50181

* CA = California Emission Specification, USA = 50 State Emission Specification

2000 MY CA/50 State Certified Emission Control Labels

MODEL	ENGINE NAME	TRANSMISSION	EMISSIONS*	PART NUMBERS
ECHO	1NZ–FE	All	USA	11298–21010
Corolla	1ZZ–FE	All	USA	11298–22032
Celica	1ZZ–FE	All	USA	11298–22080
	2ZZ–GE	All	USA	11298–22050
Camry	5S–FE	All	USA	11298–7A590
	1MZ–FE	M/TM	USA	11298–20320
	1MZ–FE	A/TM	CA	11298–20310
Camry Solara	5S–FE	All	USA	11298–7A590
	1MZ–FE	M/TM	USA	11298–20320
	1MZ–FE	A/TM	CA	11298–20310
Camry Solara Convertible	5S–FE	A/TM	USA	11298–7A590
	1MZ–FE	A/TM	CA	11298–20310
Camry (CNG)	5S–FNE	A/TM	USA	11298–7A640
Avalon	1MZ–FE	A/TM	USA	11298–20290
Sienna	1MZ–FE	A/TM	USA	11298–20340
RAV4	3S–FE (2WD/4WD)	All	USA	11298–7A620
4Runner	3RZ–FE (2WD)	All	USA	11298–75550
	3RZ–FE (4WD)	M/TM	USA	11298–75550
	5VZ–FE (2WD/4WD)	All	USA	11298–62690
Tacoma	2RZ–FE (2WD)	All	USA	11298–75510
	3RZ–FE (2WD/4WD)	A/TM	USA	11298–75530
	3RZ–FE (4WD XtraCab)	M/TM	USA	11298–75530
	3RZ–FE (4WD XtraCab)	A/TM	USA	11298–75550
	3RZ–FE (PreRunner)	A/TM	USA	11298–75530
	5VZ–FE (2WD XtraCab)	All	USA	11298–62670
	5VZ–FE (4WD & PreRunner)	All	USA	11298–62690
Tundra	5VZ–FE	All	CA	11298–62640
	2UZ–FE	A/TM	USA	11298–50241
Land Cruiser	2UZ–FE	A/TM	USA	11298–50182

* CA = California Emission Specification, USA = 50 State Emission Specification

TOYOTA

Technical Service BULLETIN

May 4, 2001

Title:

REPLACEMENT CERTIFICATION LABELS

Models:

All Models

TSB

PG006-01

PRODUCT GENERAL INFORMATION

Introduction

Replacement Certification Labels (vinyl label affixed to driver's door or door post) **may be** available from Toyota providing the request meets one of the criteria listed below.

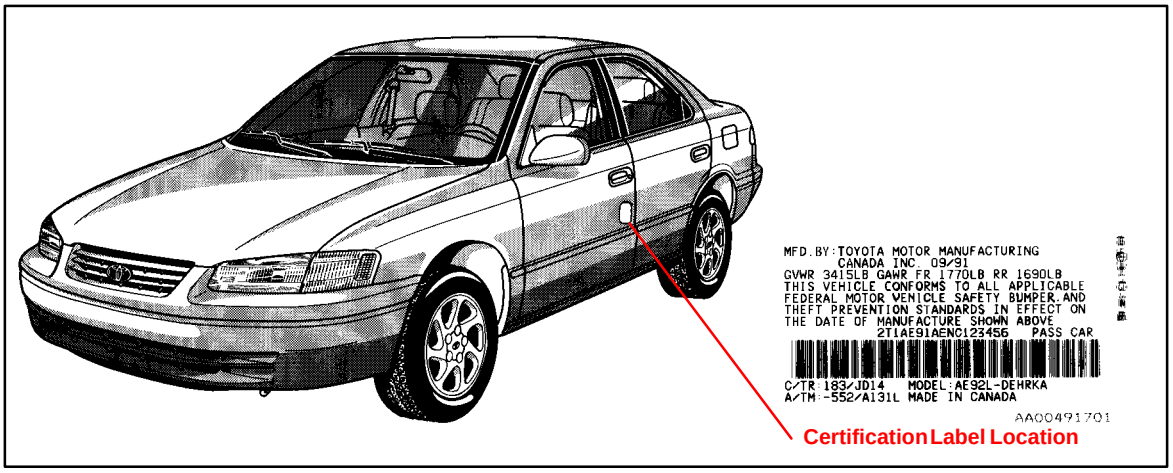

Applicable Vehicles

- All Toyota vehicles.

Certification Label Criteria

1. The vehicle is in an accident and the label is damaged or is attached to a part that will be replaced during the repair.

NOTE:

- **Processing a new label *will be delayed significantly if the old certification label is not available.***
- **A replacement label MAY NOT be available if the vehicle is more than 5 years old and the old label does not accompany this request.**

2. The label is stolen.

Procurement Procedure

To request a replacement label, complete a copy of the form on the back of this bulletin. Your dealer parts account will be billed $10.00 for each replacement of a damaged or stolen label.

NOTE:

All replacement labels for damaged and/or stolen vehicles are subject to approval by the Technical Compliance Department. If you have any specific questions, contact (310) 468–3390.

Warranty Information

OP CODE	DESCRIPTION	TIME	OPN	T1	T2
N/A	Not Applicable to Warranty	–	–	–	–

TOYOTA

APPLICATION FOR REPLACEMENT CERTIFICATION LABEL

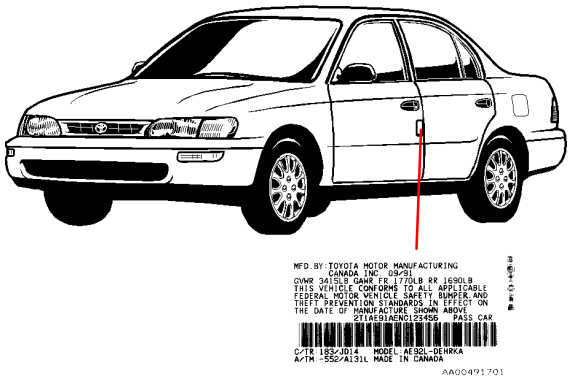

REASON FOR REPLACEMENT

- ☐ ACCIDENT DAMAGE
- ☐ STOLEN
- ☐ OTHER _____

REASON/EXPLANATION

PLEASE PROVIDE CORRECT VIN _ _ _ _ _ _ _ _ _ _ _ _ _ _ _ _ _

ATTACH ORIGINAL LABEL HERE

NOTE:
Original label MUST accompany this application or order will be significantly delayed.

DEALER INFORMATION

DEALER CODE: ☐☐☐☐☐

DEALER NAME: _____

ADDRESS: _____
STREET ADDRESS

_____
CITY, STATE, ZIP CODE

TELEPHONE: ( ) _____
AREA CODE, TELEPHONE NUMBER

CONTACT: _____
FIRST NAME, LAST NAME

MAIL (*DO NOT FAX*) THE COMPLETED REQUEST FORM WITH THE OLD LABEL TO:

TOYOTA MOTOR SALES, U.S.A. INC.
TECHNICAL COMPLIANCE DEPARTMENT, S207
19001 S. WESTERN AVENUE
TORRANCE, CA 90509–2991

TOYOTA

Technical Service BULLETIN

September 26, 2003

Title:

WARRANTY PARTS MARKING PROCEDURE

Models:

All Models

TSB

PG006–03

PRODUCT GENERAL INFORMATION

Introduction

Effective September 1, 2003, all warranty parts (as indicated on the next page) must be marked in the area or location of the failure. The technician should complete this procedure after the failed part has been removed from the vehicle and before the part is placed in the 10–bin storage. (Exchanged parts and remanufactured parts are not included in this procedure.)

Failed parts marking will be beneficial in detecting and resolving product and parts quality issues. This will also offer additional opportunities to make future enhancements to our parts and products.

Parts are subject to random inspection in the dealership by field representatives to ensure compliance with this new policy.

Failure to comply with this policy may result in a debit of the corresponding warranty claim(s).

Applicable Vehicles

- All models.

Parts Marking Procedure

All technicians must follow these procedures to ensure proper parts marking:

- Wipe the part clean (no excess fluid should be present).
- Indicate area of defect or failure by marking the specific part(s) with a water resistant permanent marker. Use a color that can be easily seen against the background of the part being marked. For dark surfaces the color yellow is highly recommended as well as the color black for light surfaces.
- Mark the area of failure or defect by drawing a circle, a square, pointing an arrow or adhering tape with an indication of the failed or defect location.
- Attach a completed Warranty Parts Tag (M/N 00404–PRETN–TAGS) to the marked part.

All other parts recovery/shipping policies and procedures apply.

Warranty Information

OP CODE	DESCRIPTION	TIME	OFP	T1	T2
N/A	Not Applicable to Warranty	–	–	–	–

Parts Marking Requirement

Dealers are requested to mark the location of the failure of all warranty parts that are listed below. ***This list is not inclusive.*** There may be other components that can be marked in the area of failure. All other parts that can be marked should be marked.

Parts Marking List

- assist grip assy
- audio (blemish)
- back door garnish
- bumper covers
- cargo cover (retractable)
- carpet
- clutch disc
- clutch flywheel
- combination meter glass
- console and components
- cowl assy
- cowl side trim sub–assy
- cupholders
- cylinder head cover sub–assy
- dash panel insulator assy
- dashboard and trim
- disc wheel
- display panels
- door handle assy
- door moulding
- door trim panel & molding
- emblems
- engine oil pan
- exhaust manifold
- floor and cargo mats
- gear shift knob
- grills
- headlamps
- headliner
- hoses
- instrument panel safety pad sub–assy
- Interior light assemblies and covers
- knobs, levers, handles
- l/pulley pump assy
- mirrors (side and rearview)
- navigation or VES screens
- pillar garnish
- rack and pinion/power steering gear assy
- radiator
- room partition board
- rotors (mark where min. runout is exceeded or warped)
- seat covers/cushions
- seat tracks
- soft trim
- spare tire cover
- steering column cover
- steering wheel
- tail lamps and covers
- transmission oil pan
- visor
- washer jar
- wheel cap
- wheels

Parts Marking List (Continued)

NOTE:

The following parts do not have to be marked unless the technician can determine failure and location.

air induction/ejection systems
all computers
alternators
audio (internal)
batteries
bearings
belts
catalytic converter
crankshaft
cruise control
distributors
EGR systems
engine control systems
exchange parts
exhaust systems
fuel injection systems
fuel injectors
fuel pump
ignition system
internal engine components
internal transmission components
oil cooler
power door lock switches
remanufactured parts
starters
suspension components
valve covers
window regulators
wiper motors

TOYOTA

Technical Service BULLETIN

May 4, 2001

Title:

REPLACEMENT VIN PLATES

Models:

All Models

TSB

PG007-01

PRODUCT GENERAL INFORMATION

Introduction

Replacement **VIN** plates (metal plates riveted to dashboard) **may be** available from Toyota providing the request meets the criteria listed below.

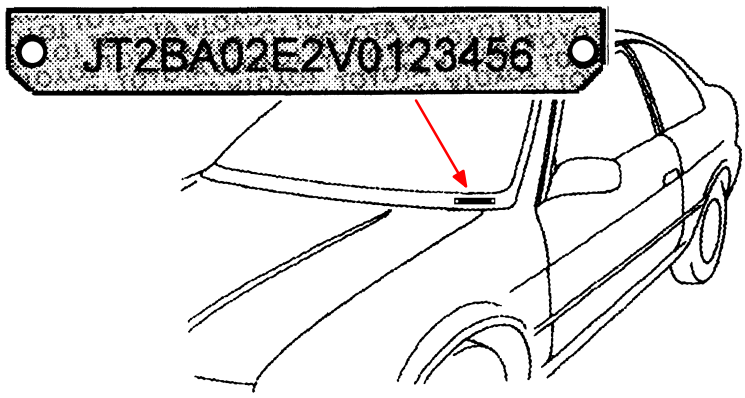

VIN Plate Location

Applicable Vehicles

- All Toyota vehicles.

Replacement VIN Plate Criteria

- The vehicle is in an accident and the plate is damaged.

NOTE:

The original plate to be replaced MUST accompany the request.

NOTE:

If a plate is stolen, be sure to contact the State Police or your State's Department of Motor Vehicles (DMV). In most cases the State DMV will issue a unique number so that the original number can be included on stolen vehicle listings. If this is the case, a replacement plate is NOT available from Toyota. However, the original VIN, NOT the state issued VIN, must be used on all warranty claims.

Procurement Procedure

To request a replacement plate, complete a copy of the form on the back of this page. Note that the damaged VIN plate **MUST** accompany the request form. Your dealer parts account will be billed $10.00 for each replacement of a damaged plate.

NOTE:

All replacement plates for damaged and/or stolen vehicles are subject to approval by the Technical Compliance Department. If you have any specific questions, contact (310) 468–3390.

Warranty Information

OP CODE	DESCRIPTION	TIME	OPN	T1	T2
N/A	Not Applicable to Warranty	–	–	–	–

TOYOTA

APPLICATION FOR REPLACEMENT VIN PLATE

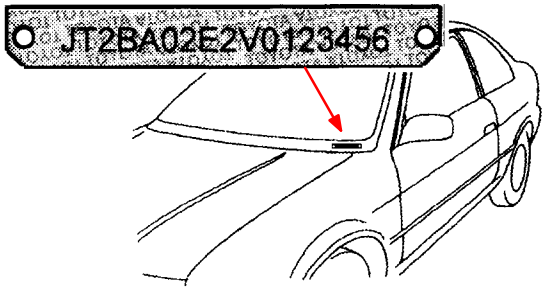

REASON FOR REPLACEMENT

☐ ACCIDENT DAMAGE

☐ OTHER _____

REASON/EXPLANATION

PLEASE PROVIDE CORRECT VIN _ _ _ _ _ _ _ _ _ _ _ _ _ _ _ _ _



DEALER INFORMATION

DEALER CODE: ☐☐☐☐☐

DEALER NAME: _____

ADDRESS: _____

STREET ADDRESS

_____

CITY, STATE, ZIP CODE

TELEPHONE: ( ) _____

AREA CODE, TELEPHONE NUMBER

CONTACT: _____

FIRST NAME, LAST NAME

MAIL (*DO NOT FAX*) THE COMPLETED REQUEST FORM WITH THE OLD PLATE TO:

TOYOTA MOTOR SALES, U.S.A. INC.
TECHNICAL COMPLIANCE DEPARTMENT, S207
19001 S. WESTERN AVENUE
TORRANCE, CA. 90509–2991

TOYOTA

Technical Service BULLETIN

September 1, 1999

Title:

2000 MODEL YEAR PRE-DELIVERY SERVICE (PDS)

Models:

All Models

TSB

Introduction

Pre–Delivery Service is a critical step in satisfying your dealership's new car customers. Customer feedback indicates the following areas deserve special attention when performing PDS:

- Careful inspection for Paint Chips/Scratches and Body Dents/Dings
- Proper Operation of Electrical Accessories (including interior light, clock and radio reset).
- Interior Cleanliness
- Proper Function of Mechanical Systems

Periodic in–dealership training for technicians, both new and experienced, is a requirement to ensure that PDS is performed correctly. A number of training resources are available in your dealership.

- Pre–Delivery Service – The Final Touch video (P/N 00401–43067)
- Pre–Delivery Service Technician's Handbook (P/N 00401–43068)

The "Service Manager's Guide to Technician Orientation and Training" is included in the Dealer Delivery Quality Operations Guide (P/N 00116–DDQOG–98) and provides a sample training agenda to conduct a successful session in your dealership. (These training materials have been distributed to dealers. Additional copies are available through the TDN system – Dealer Support Materials.)

A new PDS form has been developed for the 2000 model year. Some check points have been added, expanded or clarified. For improved customer satisfaction, please pay particular attention to the Fuse Installation and Electrical Operation areas indicated in bold red type.

PDS Form Ordering Information

An initial distribution of PDS forms will be mailed to each dealership. Additional PDS forms (P/N 00406–PDS00) may be ordered via TDN – Dealer Support Materials or from the Material Distribution Center utilizing form 1450.

Warranty Policy

If the need for additional repairs or adjustments is noted during the Pre–Delivery Service, required service should be performed under warranty. Reimbursement should be requested via regular warranty channels.

The Warranty Policy and Procedures Manual requires that you maintain the completed PDS check sheet in the customer file. If you cannot produce a completed form for each retailed vehicle upon TMS and/or Region/Distributor audit, the PDS payment amount will be subject to debit.

An additional Repair Order completed in conjunction with normal PDS must have time punch/flags for service. If multiple repairs are performed, separate time flags must be punched for each repair.

See Page 7, Warranty Information section for Opcode information.

TOYOTA

1999 TOYOTA PRE-DELIVERY SERVICE CHECK SHEET

A. BEFORE INSPECTION

	OK	Adjust/ Repair
01 INSTALL FUSE(S) See Application Chart on back	☐	
02 Install outside rearview mirrors*	☐	

B. FUNCTIONAL OPERATION

Apply parking brake and turn ignition "ON;" place gear selector in reverse; turn on lights and rear defogger. Unlock doors; release gas door; release trunk hatch.

	OK	Adjust/ Repair
01 Check dome, courtesy, map and sun visor lights*	☐	☐
02 Check warning/indicator lights, gauges and horn	☐	☐
03 Check passenger air bag system cutoff switch and light*	☐	☐
04 Check windshield wipers and washers	☐	☐
05 Check headlights, instrument lights, turn signals, emergency flashers and brake lights	☐	☐
06 Check inside/outside rearview mirror operation/adjustment	☐	☐
07 Check cigarette lighter and power outlet*	☐	☐
08 Check sunroof/convertible top*	☐	☐
09 Check audio system/remote function and set clock*	☐	☐
10 Install shift-lock override button cover	☐	

C. WALKAROUND INSPECTION

Start at left front door. Check window and door lock operation (from master power switch, if equipped). Continue around vehicle in a counterclockwise direction checking each door and window operation, child door locks, seat belts, interior condition, all lights, trunk contents. Remove rubber body plugs from glove box for installation during UNDER VEHICLE INSPECTION. Finish by checking headlight aim and continue into UNDER HOOD checks.

	OK	Adjust/ Repair
01 Check window operation	☐	☐
02 Check door and door lock operation, including wireless remote control/theft deterrent system*	☐	☐
03 Check that engine starts with all keys	☐	☐
04 Check power sliding door operation (Sienna)*	☐	☐
05 Check that Child Safety Door Locks are in normal (unlocked) position*	☐	☐
06 Check seats and seat belt operation	☐	☐
07 Check integrated child seat and seat belt operation	☐	☐
08 Check rear defogger*	☐	☐
09 Check side marker, tail, backup and license plate lights	☐	☐
10 Check trunk light* and trunk trim appearance	☐	☐
11 Check spare tire pressure and jack and tool installation	☐	☐
12 Check headlight aim	☐	☐

D. UNDER HOOD

	OK	Adjust/ Repair
01 Check engine oil and ATM* fluid levels	☐	☐
02 Check brake, clutch* and power steering fluid levels	☐	☐
03 Check engine coolant level	☐	☐
04 Check battery state-of-charge by Open Circuit Voltage method. Recharge if below 12.4 volts (75% charge)	☐	☐

* Inspect or Install when Equipped/Required

E. UNDER VEHICLE (ON HOIST)

	OK	Adjust/ Repair
01 Remove disc brake anti-rust covers*	☐	
02 Remove front spring spacers* (See Application Chart on back)	☐	
03 Remove engine protector (Celica w/5S-FE)	☐	
04 Install rubber body plugs*	☐	
05 Inspect tires for defects/damage and adjust tires' pressure	☐	☐
06 Install wheel covers/caps	☐	
07 Install mudguards*	☐	

F. ROAD TEST

A complete road test helps assure Customer Satisfaction. Drive vehicle over a variety of road surfaces and driving conditions. Check for unusual noise and driving performance.

Enter Odometer Reading

Reading before test _____

Reading after test _____

	OK	Adjust/ Repair
01 Check cold engine operation	☐	☐
02 Check engine operation during warm-up	☐	☐
03 Check engine at normal operating temperature	☐	☐
04 Check clutch/transmission operation	☐	☐
05 Check brake and parking brake operation	☐	☐
06 Check steering operation and off-center	☐	☐
07 Inspect for abnormal noises and vibration	☐	☐
08 Inspect for squeaks and rattles	☐	☐
09 Check front and rear* heater and A/C* operation	☐	☐
10 Check cruise control operation*	☐	☐
11 Check front seat heater* and seat memory function*	☐	☐

G. FINAL INSPECTION AND CLEANING

	OK	Adjust/ Repair
01 Remove interior protective covers, unnecessary labels, tags, etc.	☐	
02 Visually inspect all interior parts for installation, damage, fit, dirt, etc.	☐	☐
03 Remove Rapgard™ protective film	☐	
04 Wash and clean vehicle	☐	
05 Inspect paint finish for scratches, chips, rust, dents, damage, etc.	☐	☐
06 Inspect exterior body parts for proper installation, damage, rust, etc.	☐	☐
07 Sign "Commitment to Excellence" sticker (P/N 00103-STICK-PDS96) and affix to window	☐	☐

COMMENTS

_____

_____

_____

_____

_____

Completion and retention of this form is required to comply with Toyota's Warranty Policy.

TECHNICIAN'S SIGNATURE _____ SERVICE MANAGER'S SIGNATURE _____

NAME (PLEASE PRINT) _____ NAME (PLEASE PRINT) _____

THE TOYOTA TOUCH
COMMITMENT TO EXCELLENCE

We hereby certify that all items on this form have been checked and corrected for proper operation as required.

Date	Dealer Name	Dealer Code	Vehicle Identification Number (Sticker)

Order additional forms through the Dealer Support Materials System (MDC).
98-PRT-129

00406 PDS99

Before Inspection

When performing new car Pre–Delivery Service, install fuse(s) before moving vehicle from storage lot so that FUNCTIONAL OPERATION checks can begin as soon as vehicle is moved into the service stall.

A01 Install fuse(s)*

MODEL	FUSE(S)	STORED IN
Avalon	FUSE (or SHORT PIN) NOT REMOVED	
Camry (VINs starting with 4T1)		
Camry (VINs starting with JT2)	SHORT PIN	FUSE BOX
Camry Solara		
Celica	DCC	FUSE BOX
Corolla	DOME	FUSE BOX
ECHO		
Land Cruiser	RADIO, ECU–B1	FUSE BOX
MR2 Spyder	ECU–B1	FUSE BOX
RAV4	DOME	FUSE BOX
Sienna	FUSE (or SHORT PIN) NOT REMOVED	
Tacoma		
Tundra		
4Runner	DOME, MPX–B	FUSE BOX

A02 Install outside rearviewmirrors*

Functional Operation

Apply parking brake and turn ignition “ON”, place gear selector in reverse, turn on lights and rear defogger. Unlock all doors, release fuel door, release trunk/rear hatch.

B01 Check dome, courtesy, map and sunvisor lights*

B02 Check warning/indicator lights, gauges and horn

B03 Check Passenger Air Bag System Cutoff switch and light*

NOTE:

Make sure the Passenger Air Bag Cutoff System is “ON“ when finished with PDS. The indicator light should be off.

Check the system for proper operation by cycling from the “ON” to the “OFF“ position.

Check that the indicator light comes on when the system is “OFF“.

B04 Check windshield wipers and washers

B05 Check headlights, instrument lights, turn signals, emergency flashers and brake lights

Functional Operation (Continued)

B06 Check inside/outside rearview mirror operation/adjustment

B07 Check cigarette lighter and power outlet*

Check the power outlet using an electrical accessory designed for this use.

B08 Check sunroof/convertible top*

> **NOTE:**
> **Convertible top will not operate while car is moving.**

B09 Check audio system and set clock*

B10 Install shift–lock override button cover

Walk–Around Inspection

Starting at the left front door, check window and door lock operation and the operation of all power windows and door locks from master switch on vehicles so equipped. While walking around vehicle in a counterclockwise direction, open left rear door and check operation of window regulator and door lock, set Child Safety Door Lock to the normal (unlocked) position. Assure tightness of interior garnishes and check seat belts. Inspect trunk contents and lights at rear of vehicle. Repeat checks at right rear door. Inspect right front door window regulator and lock operation and garnishes. Check seat and seat belt operation. Continue on around to the front of the vehicle checking lights. Make necessary adaptations for two–door, hatchback, Truck and Sienna models.

C01 Check window operation

C02 Check door and door lock operation, including wireless remote control/theft deterrent system*

C03 Check that engine starts with all keys

C04 Check power sliding door operation (Sienna)*

C05 Check that Child Safety Door Locks are in normal (unlocked) position*

C06 Check Seats and Seat Belt Operation

C07 Check integrated child seat and seat belt operation*

C08 Check rear defogger*

C09 Check side marker, tail, backup and license plate lights

C10 Check trunk light* and trunk trim appearance

C11 Check spare tire pressure and jack and tool installation

> **NOTE:**
> **Compact spare tire – 60 psi (413 kPa).**

C12 Check headlight aim

Ensure that ignition, light switch, etc., are ”OFF” and A/T selector is in PARK.

Under Hood

D01 **Check engine oil and ATM* fluid levels**

D02 **Check brake, clutch* and power steering fluid levels**

Visually inspect using see–through reservoirs.

D03 **Check engine coolant level**

D04 **Check battery state–of–charge by Open Circuit Voltage method. Recharge if below 12.4 Volts (75% of charge)**

Under Vehicle (On Hoist)

E01 **Remove disc brake anti–rust covers***

Visually inspect rotors for rust.

North American produced models are not equipped with anti–rust covers.

E02 **Remove front spring spacers***

Remove Spring Spacers from Japan Production Camry V6 models.

Remove Spring Spacers from Celica models.

MODEL	LOCATION
Camry V6 (Japan Production Only)	FRONT COIL SPRINGS
Celica	

E03 **Install rubber body plugs***

Install the rubber plugs (stored in glove box) into rear torque box holes.

E04 **Inspect tires for defects/damage and adjust tires' pressure**

The recommended tire inflation pressure changes with tire size, driving conditions and vehicle model. For precise tire pressure information, refer to the Owner's Manual and/or tire information label located on the vehicle.

Sidewall "Maximum" cold tire inflation pressure should not be used for normal driving.

E05 **Install wheel covers/caps**

E06 **Install mudguards (Solara)**

E07 **Install antenna (Tundra)**

Road Test A complete road test helps assure Customer Satisfaction. Drive vehicle over a variety of road surfaces and driving conditions. Check for unusual noise and driving performance.

F01 Check cold engine operation
Check starting and fast idle operation performance.

F02 Check engine operation during warm–up
Check that engine operates smoothly during warm–up.
Check for unusual noise, engine vibration, rough idle, etc.

F03 Check engine at normal operating temperature
Check engine performance over a broad range of driving conditions, including idle quality, acceleration, cruise and deceleration.

F04 Check clutch/transmission operation
Check clutch operation, including: engagement, disengagement, chattering and unusual noise.
Check manual transmission operation, including shift lever/linkage and unusual noise.
Check automatic transmission operation, including operation in each range, neutral start switch and shift lock system.

F05 Check brake and parking brake operation
Check brake function, including unusual noise, parking brake performance and all related brake system indicator lights.

F06 Check steering operation and off–center
Check steering function and steering wheel centering.
Check for suspension noise.

F07 Inspect for abnormal noises and vibration

F08 Inspect for squeaks and rattles

F09 Check front and rear* heater and A/C* operation

F10 Check cruise control operation*
Check cruise control, including On–Off switch, “SET/COAST”, “RESUME/ACCEL”, and “CANCEL” functions.

F11 Check front seat heater* and seat memory function*

F12 Set/Calibrate compass (Avalon XLS)

Road Test

G01 Remove interior protective covers, unnecessary labels, tags, etc. (Remove protective covers just before delivery to customer).

- Remove plastic covers from door panels, seats, head restraints and sunvisors, as required.
- Remove labels, tags and stickers (except those containing owner information).

NOTE:
Consumer Information Label such as Air Bag Information Warning and Bumper Information Labels must be left on the vehicle until delivery to a retail customer.

G02 Visually inspect all interior parts for installation, damage, fit, dirt, etc.

G03 Remove RapgardTM protective film

G04 Wash and clean vehicle

G05 Inspect paint finish for scratches, chips, rust, dents, damage, etc.

G06 Inspect exterior body parts for proper installation, damage, rust, etc.

G07 Sign “Commitment To Excellence“ sticker (P/N 00405–STICK–PDS98) and affix to window

Warranty Information

OP CODE	DESCRIPTION	TIME	OPN	T1	T2
001013	Pre Delivery Service	*	N/A	N/A	N/A

* Variable by model.

TOYOTA

Technical Service BULLETIN

December 4, 2002

Title:

SUSPENSION BALL JOINT INSPECTION

Models:

See Applicable Models

TSB

PG027-02

PRODUCT GENERAL INFORMATION

Introduction

This bulletin describes the inspection method and free play specification figures for suspension ball joints. The on–vehicle inspection methods have been standardized.

Applicable Vehicles

- **1989 – 1992** model year **Cressida** vehicles.
- **1989 – 1998** model year **Supra** vehicles.
- **2001 – 2003** model year **Highlander** vehicles.
- **1995 – 2003** model year **Avalon** vehicles.
- **1989 – 2003** model year **Camry / Camry Solara** vehicles.
- **1985 – 2003** model year **MR2** vehicles.
- **1990 – 2003** model year **Celica** vehicles.
- **2001 – 2003** model year **Prius** vehicles.
- **1988 – 2003** model year **Corolla / Corolla Matrix** vehicles.
- **2000 – 2003** model year **ECHO** vehicles.
- **1991– 1999** model year **Tercel** vehicles.
- **1991 – 1999** model year **Paseo** vehicles.
- **1990 – 1997** model year **Previa** vehicles.
- **1998 – 2003** model year **Sienna** vehicles.
- **1996 – 2003** model year **RAV4 / RAV4 EV** vehicles.
- **1999 – 2003** model year **Land Cruiser** vehicles.
- **2001 – 2003** model year **Sequoia** vehicles.
- **1989 – 2003** model year **4Runner** vehicles.
- **2000 – 2003** model year **Tundra** vehicles.
- **1995 – 2003** model year **Tacoma** vehicles.
- **1989 – 1995** model year **Truck** vehicles.
- **1993 – 1998** model year **T–100** vehicles.

Warranty Information

OP CODE	DESCRIPTION	TIME	OFP	T1	T2
N/A	Not Applicable to Warranty	–	–	–	–

Inspection Information

MODEL	LOCATION	LOWER BALL JOINT OR SUSPENSION BALL JOINT			UPPER BALL JOINT		
		INSP. METHOD	MAX. PLAY	TURNING TORQUE	INSP. METHOD	MAX. PLAY	TURNING TORQUE
Cressida (MX8#) 1989 – 1992	Front	1–(C)	No Play Felt	40 in.•lbf (4.5 N•m) or Less	N/A	N/A	N/A
	Rear	3	No Play Felt	31 in.•lbf (3.5 N•m) or Less	2–(A)	No Play Felt	31 in.•lbf (3.5 N•m) or Less
Supra (MA70) 1989 – 1994	Front	1–(A)	0.4 mm	4 in.•lbf (0.5 Nm) or Less	2–(A)	No Play Felt	31 in.•lbf (3.5 N•m) or Less
	Rear	3	No Play Felt	31 in.•lbf (3.5 N•m) or Less			
Supra (JZA80) 1994 – 1998	Front	1–(A)	0.4 mm	27 in.•lbf (3.0 N•m) or Less	2–(A)	No Play Felt	31 in.•lbf (3.5 N•m) or Less
	Rear	1–(A)	No Play Felt	31 in.•lbf (3.5 N•m) or Less			
Highlander (ACU2#, MCU2#) 2001 – 2003	Front	1–(C)	No Play Felt	31 in.•lbf (3.5 N•m) or Less	N/A	N/A	N/A
Avalon (MCX10, 20) 1995 – 2003	Front	1–(C)	No Play Felt	31 in.•lbf (3.5 N•m) or Less	N/A	N/A	N/A
Camry, Camry Solara (SV2#, VZV21, VCV10, MCV10, 20, 30 ACV 20, 30 SVX 10, 20) 1989 – 2003	Front	1–(C)	No Play Felt	31 in.•lbf (3.5 N•m) or Less	N/A	N/A	N/A

Inspection Information (Continued)

MODEL	LOCATION	LOWER BALL JOINT OR SUSPENSION BALL JOINT			UPPER BALL JOINT		
		INSP. METHOD	MAX. PLAY	TURNING TORQUE	INSP. METHOD	MAX. PLAY	TURNING TORQUE
MR2 (AW1#) 1985 – 1989	Front	1–(C)	No Play Felt	27 in.•lbf (3.0 N•m) or Less	N/A	N/A	N/A
	Rear	1–(C)*1 3*2	No Play Felt	27 in.•lbf (3.0 N•m) or Less*1 31 in.•lbf (3.5 N•m) or Less*2			
MR2 (SW2#) 1990 – 1996	Front	1–(C)	No Play Felt	22 in.•lbf (2.5 N•m) or Less	N/A	N/A	N/A
	Rear			27 in.•lbf (3.0 N•m) or Less			
MR2 (ZZW30) 2000 – 2003	Front	1–(C)	No Play Felt	22 in.•lbf (2.5 N•m) or Less	N/A	N/A	N/A
	Rear	3		9 in.•lbf (1.0 N•m) or Less			
Celica (AT180, ST18#) 1990 – 1993	Front	1–(C)	No Play Felt	35 in.•lbf (4.0 N•m) or Less	N/A	N/A	N/A
Celica (AT200, ST20#, ZZT23#) 1994 – 2003	Front	1–(C)	No Play Felt	44 in.•lbf (5.0 N•m) or Less	N/A	N/A	N/A
Prius (NHW11) 2001 – 2003	Front	1–(C)	No Play Felt	44 in.•lbf (5.0 N•m) or Less	N/A	N/A	N/A
Corolla (AE9#, 10#) 1988 – 2003	Front	1–(C)	No Play Felt	27 in.•lbf (3.0 N•m) or Less	N/A	N/A	N/A
Corolla/ Corolla Matrix (AE10#, ZZE11#, 13#) 1988 – 2003	Front	1–(C)	No Play Felt	44 in.•lbf (5.0 N•m) or Less	N/A	N/A	N/A
ECHO (NCP1#) 2000 – 2003	Front	1–(C)	No Play Felt	31 in.•lbf (3.5 N•m) or Less	N/A	N/A	N/A
Tercel, Paseo (EL4#, 5#) 1991 – 1999	Front	1–(C)	No Play Felt	27 in.•lbf (3.0 N•m) or Less	N/A	N/A	N/A

Inspection Information (Continued)

MODEL	LOCATION	LOWER BALL JOINT OR SUSPENSION BALL JOINT			UPPER BALL JOINT		
		INSP. METHOD	MAX. PLAY	TURNING TORQUE	INSP. METHOD	MAX. PLAY	TURNING TORQUE
Previa (TCR1#, 2#) 1990 – 1997	Front	1–(C)	No Play Felt	35 in.•lbf (4.0 N•m) or Less	N/A	N/A	N/A
Sienna (MCL10) 1998 – 2003	Front	1–(C)	No Play Felt	31 in.•lbf (3.5 N•m) or Less	N/A	N/A	N/A
RAV4/ RAV4 EV (SXA1#, BEA11) 1996 – 2000	Front	1–(C)	No Play Felt	40 in.•lbf (4.5 N•m) or Less	N/A	N/A	N/A
	Rear	3	No Play Felt	31 in.•lbf (3.5 N•m) or Less			
RAV4 (ACA2#) 2001 – 2003	Front	1–(C)	No Play Felt	44 in.•lbf (5.0 N•m) or Less	N/A	N/A	N/A
Land Cruiser 100 (UZJ100) 1999 – 2003	Front	1–(A)	No Play Felt	27 in.•lbf (3.0 N•m) or Less	2–(A)	No Play Felt	40 in.•lbf (4.5 N•m) or Less
Sequoia (UCK35, 45) 2001 – 2003	Front	1–(A)	0.5 mm	22 in.•lbf (2.5 N•m) or Less	2–(A)	No Play Felt	40 in.•lbf (4.5 N•m) or Less
4Runner (VZN120, 13#, RN13#, 12#) 1989 – 1995	Front	1–(C)	2.3 mm	53 in.•lbf (6.0 N•m) or Less	2–(B)	No Play Felt	Turns Smoothly
4Runner (RZN18#, VZN18#) 1996 – 2003	Front	1–(A)	0.5 mm	22 in.•lbf (2.5 N•m) or Less	2–(A)	No Play Felt	40 in.•lbf (4.5 N•m) or Less
Tundra (VCK30, 40, UCK30, 40) 2000 – 2003	Front	1–(A)	0.5 mm	22 in.•lbf (2.5 N•m) or Less	2–(A)	No Play Felt	40 in.•lbf (4.5 N•m) or Less

Inspection Information (Continued)

MODEL	LOCATION	LOWER BALL JOINT OR SUSPENSION BALL JOINT			UPPER BALL JOINT		
		INSP. METHOD	MAX. PLAY	TURNING TORQUE	INSP. METHOD	MAX. PLAY	TURNING TORQUE
Tacoma*3 (RZN140, 150, VZN150) 1995 – 2003	Front	1–(A)	0.5 mm	40 in.•lbf (4.5 N•m) or Less	2–(A)	No Play Felt	40 in.•lbf (4.5 N•m) or Less
Tacoma*4 (RZN140, 150, VZN150) 1995 – 2003	Front	1–(A)	0.5 mm	31 in.•lbf (3.5 N•m) or Less	2–(A)	No Play Felt	40 in.•lbf (4.5 N•m) or Less
Tacoma (RZN161, 171, 19#, VZN160, 170, 195) 1995 – 2003	Front	1–(A)	0.5 mm	22 in.•lbf (2.5 N•m) or Less	2–(A)	No Play Felt	40 in.•lbf (4.5 N•m) or Less
Truck*5 (RN8#, 90 VZN85, 9#) 1989 – 1995	Front	1–(B)	2.3 mm	44 in.•lbf (5.0 N•m) or Less	2–(A)	2.3 mm	35 in.•lbf (4.0 N•m) or Less
Truck*6 (RN8#, 90 VZN85, 9#) 1989 – 1995	Front	1–(B)	0.5 mm	44 in.•lbf (5.0 N•m) or Less	2–(A)	2.3 mm	35 in.•lbf (4.0 N•m) or Less
Truck (RN10#, 11# VZN10#, 110) 1989 – 1995	Front	1–(C)	2.3 mm	53 in.•lbf (6.0 N•m) or Less	2–(B)	2.3 mm	Turns Smoothly
T–100 (RCK10, VCK1#) 1993 – 1998	Front	1–(A)	0.5 mm	62 in.•lbf (7.0 N•m) or Less	2–(A)	1.9 mm	35 in.•lbf (4.0 N•m) or Less
T–100 (VCK2#) 1993 – 1998	Front	1–(C)	2.3 mm	53 in.•lbf (6.0 N•m) or Less	2–(B)	No Play Felt (from 1995 MY)	Turns Smoothly

*1 Lower Ball Joint

*2 Suspension Arm Ball Joint

*3 With Serial Number Prior to Z718190

*4 With Serial Number After and including Z718190

*5 With Serial Number Prior to those listed in *6

*6 RN80–0087125, RN80–5130170, RN85–0004477, RN85–5046258, RN85–9010725, RN90–0014600, RN90–5047105, RN90–9002376, VZN85–0003605, VZN85–5004547, VZN90–5025989, VZN95–0025290, VZN90–0006119

On–Vehicle Inspection

NOTE:
- **Be sure to check the table for the applicable inspection type based on the vehicle model.**
- **Refer to the table for the standard free play values.**

1. Inspect Lower Ball Joint Free Play

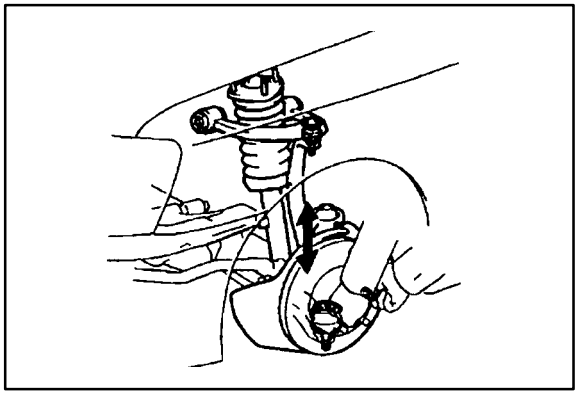

A. Move the hub up and down by hand (most models with wishbone suspension):
   a. Remove the tire.
   b. Install the 2 lug nuts.
   c. Inspect the free play while moving the lug nuts up and down at a force of 67 lbf (294 N, 30 kgf).

B. Move the lower arm using a lever (some models with double wishbone type suspension):
   a. Lift up the vehicle.
   b. Place the tip of the lever to the wheel and inspect the free play while moving the lower arm up and down.

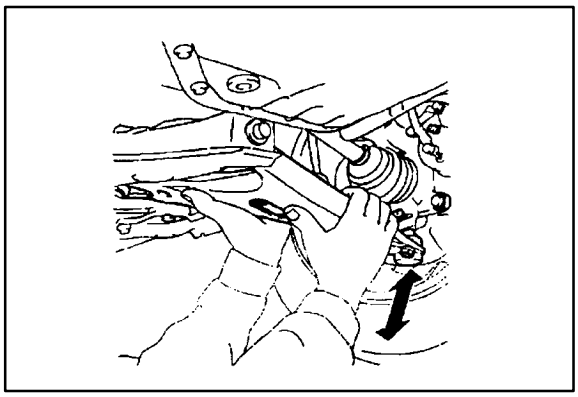

C. Move the lower arm by hand (all models with strut type suspension and some models with wishbone type suspension):
   a. Lift up the vehicle.
   b. Inspect the free play while moving the lower arm up and down at a force of 67 lbf (294 N, 30 kgf).

On–Vehicle Inspection (Continued)

2. Inspect Upper Ball Joint Free Play

A. Move the upper arm by hand (models with the LOWER control arm linked by a torsion bar, and all models using a coil spring).

a. Remove the front tire.

b. Inspect the free play while moving the upper arm up and down at a force of 67 lbf (294 N, 30 kgf).

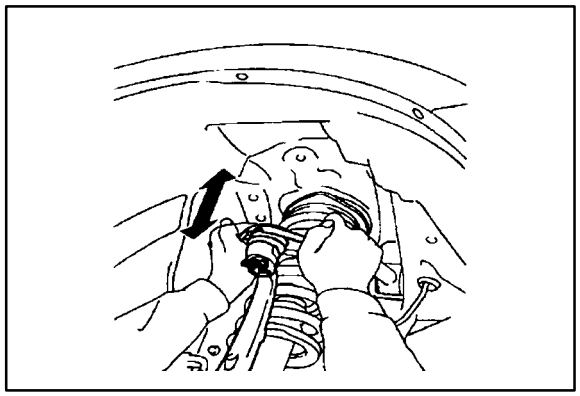

B. Move the tire with a lever (models with the UPPER control arm linked by a torsion bar).

a. Lift up the vehicle.

b. Place the lever under the tire, and inspect the free play while lifting the tire using a wooden stick, etc., as a fulcrum.

3. Inspect the Suspension Arm Ball Joint Free Play

A. Lift up the vehicle.

B. Inspect the free play while moving the control arm by hand.

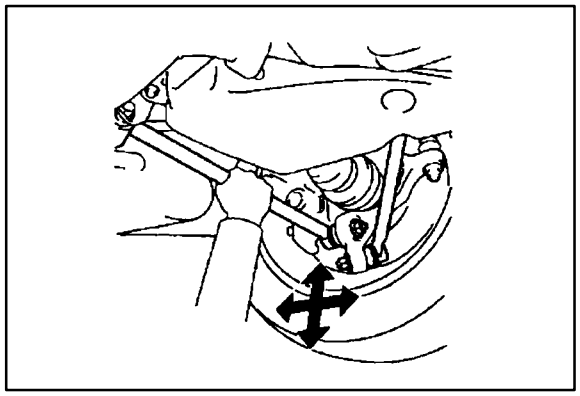

(Reference)

Free Play Inspection Method (Gauge Installation)

- Position the dial gauge between the arm (upper or lower) and the knuckle, and measure free play.
  (This illustration shows how to measure free play for vehicles with double wishbone type suspension with coil spring.)

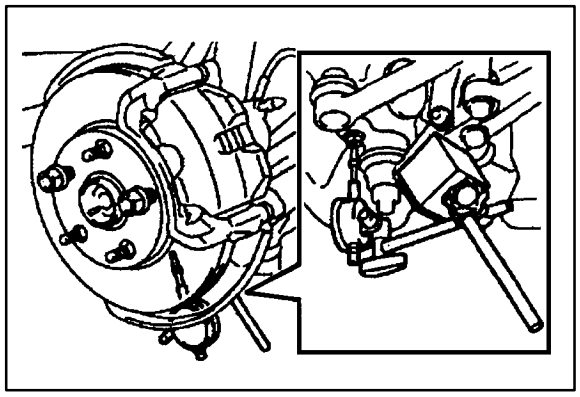

4. Inspect Ball Joint Dust Cover

Check for cracks and grease leaks on the dust cover (boots).

Turning Torque Inspection

Inspect Ball Joint Turning Torque

Move the stud back and forth 5 times, and then turn the stud continuously at 3–5 seconds per turn, and measure the turning torque at the 5th turn.

HINT:

Refer to the table for standard values for the turning torque.

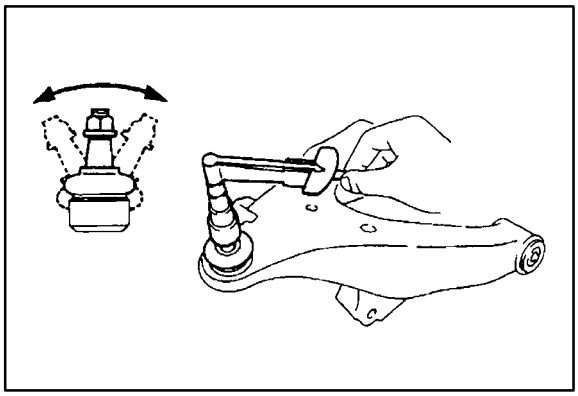

TOYOTA

Technical Service BULLETIN

December 28, 2001

Title:
REPAIR MANUAL CORRECTIONS INDEX

Models:
All Models

TSB

REVISED

PRODUCT GENERAL INFORMATION

Introduction Corrections have been made in the repair manuals listed below. Corrections available in the last quarter are marked in red, and have already been mailed to all dealers.

NOTE:
When ordering a technical publication (ie Repair Manual, Electrical Wiring Diagram) from the MDC, any Correction Page(s) associated with that particular Publication will automatically be included with your order.

Parts Information Correction Pages are available through the Dealer Support Material Network (MDC NPM System) via the corresponding part numbers from the following table:

	Publication	Number	Page(s)	Part Number
Avalon	2000 Avalon	RM746U1	DI-449	00400-RM746-1008
			DI-466	↓
			SS-33	00400-RM746-1085A
		RM746U2	SR-1	00400-RM746-1085B
			SR-21	↓
	2001 Avalon	RM808U1	SS-33	00400-RM808-1085A
		RM808U2	SR-1	00400-RM808-1085B
			SR-21	↓
	2002 Avalon	RM872U1	SS-33	00400-RM872-1085A
		RM872U2	SR-1	00400-RM872-1085B
			SR-21	↓
Camry	2000 Camry	RM742U1	DI-723	00400-RM742-1006
	2002 Camry	RM836U	40-60	00400-RM836-122
		RM840U	40-57	00400-RM840-123
		RM881U2	32-16	00400-RM881-137B
			73-22-1	00400-RM881-152B
		EWD46-1U	186	00400-EWD46-1169
			187	↓
			230	↓
			16-5	↓
			17-1	↓

Publication	Number	Page(s)	Part Number
Celica 2000 Celica	RM735U	PP-1	00400-RM735-1047
		PP-2	↓
		PP-3	↓
		PP-4	↓
		AX-13	↓
		AX-18	↓
		AX-20	↓
		AX-25	↓
		AX-30	↓
		AX-58	↓
		AX-61	↓
		AX-64	↓
		AX-66	↓
	RM740U	AX-52	00400-RM740-118
	RM744U1	DI-427	00400-RM744-1005
		SS-34	00400-RM744-101A
		SS-35	↓
		SS-39	↓
		SS-40	↓
	RM744U2	MX-3 (C56)	00400-RM744-101B
		MX-5 (C56)	↓
		MX-6 (C56)	↓
		MX-7 (C56)	↓
		MX-7-1 (C56)	↓
		MX-8 (C56)	00400-RM744-101B
		MX-3 (C60)	↓
		MX-5 (C60)	↓
		MX-6 (C60)	↓
		MX-7 (C60)	↓
		MX-7-1 (C60)	↓
		MX-8 (C60)	↓
		CL-14	00400-RM744-1043B
		CL-16	↓
		CL-16-1	↓
2001 Celica	RM818U2	CL-14	00400-RM818-1044B
		CL-16	↓
		CL-16-1	↓
		SS-34 (C56)	00400-RM818-1012B
		SS-35 (C56)	↓
		MX-3 (C56)	↓
		MX-5 (C56)	↓
		MX-6 (C56)	↓
		MX-7 (C56)	↓
		MX-7-1 (C56)	↓

	Publication	Number	Page(s)	Part Number
Celica 2001 (Continued)	Celica	RM818U2	MX-8 (C56)	00400-RM818-1012B
			MX-3 (C60)	↓
			MX-5 (C60)	↓
			MX-6 (C60)	↓
			MX-7 (C60)	↓
			MX-7-1 (C60)	↓
			MX-8 (C60)	↓
			SS-39 (C60)	↓
			SS-40 (C60)	↓
Corolla 2000	Corolla	RM719U	DI-265	00400-RM719-1009
			DI-334	↓
ECHO 2000	ECHO	RM735U	PP-1	00400-RM735-1047
			PP-2	↓
			PP-3	↓
			PP-4	↓
			AX-13	↓
			AX-18	↓
			AX-20	↓
			AX-25	↓
			AX-30	↓
			AX-58	↓
			AX-61	↓
			AX-64	↓
			AX-66	↓
Highlander 2001	Highlander	RM837U2	73 INDEX	00400-RM837-1017
			73-1 to 73-23	↓
			72-1	00400-RM837-1040B
			72-2	↓
			72-5	↓
			72-6	↓
			72-7	↓
			76-5	00400-RM837-1083B
			76-5-1	↓
			73-11	↓
			73-12	↓
			73-13	↓
		RM836U	40-60	00400-RM836-1122
		RM840U	40-57	00400-RM840-1123
		EWD44-2U	29	00400-EWD44-21025

	Publication	Number	Page(s)	Part Number
Land Cruiser	1999 Land Cruiser	RM661U1	SS-25	00400-RM661-1034A
		RM661U2	TR-32	00400-RM661-1034B
	2000 Land Cruiser	RM722U1	DI-516	00400-RM722-1010
			SS-25	00400-RM722-1034A
			SS-30	00400-RM722-Z154A
		RM722U2	SA-3	00400-RM722-Z154B
			TR-32	00400-RM722-1034B
	2001 Land Cruiser	RM795U1	SS-25	00400-RM795-1034A
			SS-30	00400-RM795-Z154A
		RM795U2	SA-3	00400-RM795-Z154B
			TR-32	00400-RM795-1034B
MR2 Spyder	2000 MR2	RM760U	BR-17	00400-RM760-143
Prius	2001 Prius	RM778U1	DI-330	00400-RM778-1035A
			DI-330-1	↓
			DI-340	↓
			DI-340-1	↓
			DI-340-2	↓
			DI-341	↓
			DI-342	↓
			DI-342-1	↓
			DI-342-2	↓
			DI-477	00400-RM778-Z157A
			DI-478	↓
			DI-480	00400-RM778-1052A
		RM778U2	SR-17	00400-RM778-Z157B
			SR-25	↓
			SR-26	↓
			HV-10	00400-RM778-1021B
			HV-11	↓
RAV4	2000 RAV4	RM772-U	AX-45	00400-RM772-120
	2001 RAV4	RM815-U	AX-52	00400-RM815-121
		RM797U2	BR-21	00400-RM797-142B
Sequoia	2001 Sequoia	RM832U1	DI-231	00400-RM832-Z156A
			DI-232	↓
			DI-233	↓
			DI-240	↓
			DI-241	↓

	Publication		Number	Page(s)	Part Number
Sequoia (Continued)	2001	Sequoia	RM832U1	BR-51	00400-RM832-1014
				DI-232	00400-RM832-1019
			RM832U2	AC-102	00400-RM832-1065B
				AC-105	↓
				AC-107	↓
				AC-108	↓
				SA-4	00400-RM832-Z156B
				SA-15	↓
				SA-62	↓
				SA-68	↓
				SA-77	↓
				BR-20	↓
				BR-54	↓
				SR-1	↓
				SR-23	↓
				SR-54	↓
				SS-41	00400-RM832-1014
				BR-50	↓
				TR-49	00400-RM832-1064B
Sienna	2000	Sienna	RM701U1	DI-322	00400-RM701-1007
Solara	2000	Solara	RM713U1	DI-575	00400-RM713-1004
				DI-644	↓
Tacoma	2000	Tacoma	EWD38-5U	42	00400-EWD38-51041
				43	↓
				173	↓
				198	↓
				202	↓
	2001	Tacoma	RM835U1	SS-65	00400-RM835-Z153
				SS-66	↓
				SS-67	↓
				SS-68	↓
				SS-69	↓
				SS-70	↓
	2002	Tacoma	RM921U1	DI-367	00400-RM921-155
				DI-369	↓
				DI-402	↓

TOYOTA

Technical Service BULLETIN

October 1, 1999

Title:

TIRE INFLATION & WHEEL LUG TORQUE REFERENCE CHART

Models:

All '00 Models

TSB

Introduction

Proper tire inflation is important to **maximize tire life** and **vehicle ride comfort.** 2000 MY Toyota vehicles are available with a wide variety of wheel sizes and tire profiles. **Prior to customer vehicle delivery,** refer to the following table to identify the appropriate tire pressure setting. Adjust tire pressures accordingly.

Applicable Vehicles

- **All 2000 Models**

Tire Pressure Settings

MODEL	TIRE SIZE	TIRE PRESSURE COLD		WHEEL NUT TORQUE (ft•lbf)
		FRONT (psi)	REAR (psi)	
Tundra	P245/70R16 106S	26	35	83
	P265/70R16 111S	26	29	83
Tacoma	P195/75R14 92S	29	35	83
	P215/70R14 96S	29	29	83
	P225/75R15 102S	26	29	83
	P265/75R15 112S	26	26	83
	31X10.5R15LT C	26	29	83
Tacoma PreRunner	P225/75R15 102S	26	29	83
	P265/75R15 112S	26	26	83
	31X10.5R15LT C	26	29	83
Land Cruiser	P275/70R16 114S	29/29*	32/35*	97
4Runner	P225/75R15 102S	29	29	83
	P265/70R16 111S	32	32	83
RAV4 2 Door	P215/70R16 99S	26	26	76
	P235/60R16 100H	25	25	76
RAV4 4 Door	P215/70R16 99S	28	26	76
	P235/60R16 100H	25	25	76
Sienna	P205/70R15 95S	35	35	76
	P215/65R15 95S	32/35*	32/35*	76

* Recommended tire inflation pressure under high load capacity.

Tire Pressure Settings (Continued)

MODEL	TIRE SIZE	TIRE PRESSURE COLD		WHEEL NUT TORQUE (ft•lbf)
		FRONT (psi)	REAR (psi)	
ECHO	155/80R13 79S	32	32	76
	P175/65R14 81S	32	32	76
Corolla	P175/65R14 81S	30	30	76
	P185/65R14 85S	30	30	76
Celica 2ZZ–GE	P205/55R15 87V	32	32	76
	205/50R16 87V	32	32	76
Celica 1ZZ–FE	195/60R15 88H	29	29	76
	P195/60R15 87H	29	29	76
Camry	P195/70R14 90S	30	30	76
	P205/65R15 92H	32*/29**/32***	32*/29**/32***	76
	P205/60R16 91H	32	32	76
Camry Solara	P205/65R15 92H	29	29	76
	P205/60R16 91H	32	32	76
Avalon	P205/65R15 92H	31	31	76
	P205/60R16 91H	32	32	76

* For vehicle capacity weight.

** For reduced loads (1 to 4 passengers).

*** For trailer towing.

TOYOTA

Technical Service BULLETIN

December 24, 1999

Title:

YEAR 2000 READINESS DISCLOSURE

Models:

All Models

TSB

PG032–99

PRODUCT GENERAL INFORMATION

Introduction

Based upon information we have obtained from our suppliers,[1] all factory–installed systems in Toyota cars, sports utility vehicles and trucks distributed and/or sold by Toyota ("Vehicles")[2] will not be affected by the change of date from 1999 to the year 2000.

Toyota anticipates no problems with past, current or future Toyota brand vehicles or Genuine Toyota parts and accessories regarding year 2000 readiness. We hope the following information is helpful to you.

Please contact our Customer Service Department at 1–800–331–4331 should you have any other questions.

Applicable Vehicles

- **All Models**

Warranty

WARRANTY STATEMENT WITH RESPECT TO TOYOTA BRAND VEHICLES

Toyota is pleased to confirm that the manufacturer's limited express warranty and Toyota's powertrain warranty warrant that all factory–installed systems in new Vehicles and Toyota Certified Used Vehicles shall be free of any defect arising solely due to a change in date from the year 1999 to the year 2000.[3]

With respect to Vehicles no longer covered under such Toyota limited express warranty, Toyota is not aware of any operational safety or functional impact the year 2000 date change would have upon any factory–installed system in Toyota Vehicles. Should Toyota become aware of any material impact to the operational safety or functionality of such systems, Toyota shall publish such information promptly.

WARRANTY STATEMENT WITH RESPECT TO GENUINE TOYOTA PARTS AND ACCESSORIES

Toyota is pleased to confirm that the manufacturer's limited express warranty warrants that all new Toyota Genuine Parts and Accessories shall be free of any defect arising solely due to a change in date from the year 1999 to the year 2000. [3]

With respect to products no longer covered under a Toyota limited express warranty, Toyota is not aware of any operational safety or functional impact the year 2000 date change would have upon such products. Should Toyota become aware of any material impact to the operational safety or functionality of such a product, Toyota shall publish such information promptly.

[1] Toyota relies on the statements made by its suppliers and has not independently verified such information.
[2] Vehicles includes alternative fuel vehicles.
[3] Please refer to terms of limited express warranty for disclaimers, limitations and restrictions.

Parts & Accessories

GENUINE TOYOTA PARTS AND ACCESSORIES

Based upon information we have obtained from our suppliers,[1] all new Genuine Toyota Parts and Accessories will not be affected by the change of date from 1999 to the year 2000.

DEALER–INSTALLED AND OTHER THIRD PARTY–INSTALLED SYSTEMS/ PRODUCTS

Our dealers and distributors may sell and/or install products that are not Genuine Toyota Parts and Accessories. Toyota can only determine the Year 2000 readiness status of Genuine Toyota Parts and Accessories. Therefore, the above statements do not apply to products that are not Genuine Toyota Parts and Accessories or were not installed by the factory. We encourage you to contact your dealer or other relevant third party regarding products installed on your Toyota vehicle(s) that are not Genuine Toyota Parts and Accessories and/or were not installed by the factory to determine any Year 2000 issues associated with those products.

[1] Toyota relies on the statements made by its suppliers and has not independently verified such information.

TOYOTA

Technical Service BULLETIN

August 19, 2003

Title:

SPARE TIRE CARRIER OPERATION

Models:

'91 – '04 Land Cruiser, '96 – '04 4Runner & Tacoma, '98 – '04 Sienna, '00 – '04 Tundra, '01 – '04 Sequoia

TSB

Introduction

The spare tire carrier may become damaged if an impact wrench or any other type of power tool is used to raise or lower the spare tire. The owner's manual, as well as a label near the drive nut, warns against the usage of an impact wrench or other power tools.

Applicable Vehicles

- **1991 – 2004** model year **Land Cruiser** vehicles.
- **1996 – 2004** model year **4Runner & Tacoma** vehicles.
- **1998 – 2004** model year **Sienna** vehicles.
- **2000 – 2004** model year **Tundra** vehicles.
- **2001 – 2004** model year **Sequoia** vehicles.

Operation Procedure

Refer to vehicle's owner's manual for vehicle specific instructions.

1. Locate the drive nut for the spare tire carrier. Refer to the vehicle's owner's manual for specific location.
2. Using the hub nut box wrench from the vehicle's tire tools kit, lower the spare tire to the ground.
3. Remove the tire from the carrier.
4. Installation of the spare tire is the reverse of removal.

Warranty Information

OP CODE	DESCRIPTION	TIME	OFP	T1	T2
N/A	Not Applicable to Warranty	–	–	–	–

TOYOTA

Technical Service BULLETIN

January 18, 2002

Title:

REPLACEMENT CERTIFICATION LABELS

Models:

All Models

TSB

PG008-02

PRODUCT GENERAL INFORMATION

TSB UPDATE NOTICE:

The information contained in this TSB updates PG006–01 dated May 4, 2001. Revised text is red and underlined. The changes will take place February 1, 2002.

Introduction

Replacement Certification Labels (vinyl label affixed to driver's door or door post) **may be** available from Toyota providing the request meets one of the criteria listed below.

Certification Label Location

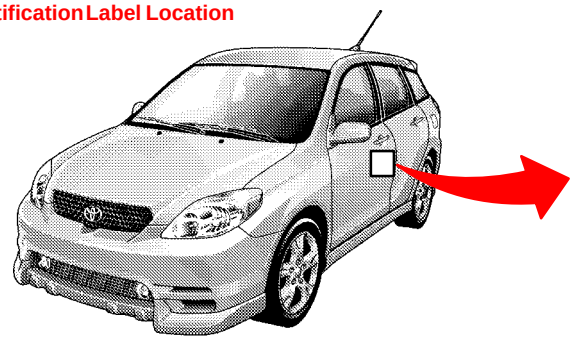

MFD.BY:TOYOTA MOTOR MANUFACTURING
CANADA INC. 10/01
GVWR 3935LB GAWR FR 1970LB RR 1985LB
THIS VEHICLE CONFORMS TO ALL APPLICABLE
FEDERAL MOTOR VEHICLE SAFETY, BUMPER, AND
THEFT PREVENTION STANDARDS IN EFFECT ON
THE DATE OF MANUFACTURE SHOWN ABOVE.
XT0XX00X0X000000 PASS.CAR

C/TR:3L5/FB14 MODEL:ZZE134L – DHPNKA
A/TM:–04A/U341F MADE IN CANADA
S26 AA01904759

Applicable Vehicles

- All Toyota vehicles.

Certification Label Criteria

1. The vehicle is in an accident and the label is damaged or is attached to a part that will be replaced during the repair.

NOTE:

- **Processing a new label *will be delayed significantly if the original certification label is not available.***
- **A replacement label MAY NOT be available if the vehicle is more than 5 years old and the old label does not accompany this request.**

2. The label is stolen.

Procurement Procedure

To request a replacement label, complete a copy of the form on the back of this bulletin. Your dealer parts account will be billed $25.00 for each replacement of a damaged or stolen label.

NOTE:

All replacement labels for damaged and/or stolen vehicles are subject to approval by the Technical Compliance Department. If you have any specific questions, contact (310) 468–3390.

Warranty Information

OP CODE	DESCRIPTION	TIME	OPN	T1	T2
N/A	Not Applicable to Warranty	–	–	–	–

APPLICATION FOR REPLACEMENT CERTIFICATION LABEL

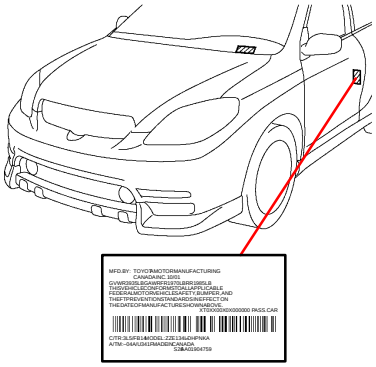

REASON FOR REPLACEMENT

- ☐ ACCIDENT DAMAGE
- ☐ STOLEN
- ☐ OTHER _____

REASON/EXPLANATION

PLEASE PROVIDE CORRECT VIN _ _ _ _ _ _ _ _ _ _ _ _ _ _ _ _ _

ATTACH ORIGINAL LABEL HERE

NOTE:
Original label MUST accompany this application or order will be significantly delayed.

DEALER INFORMATION

DEALER CODE: ☐☐☐☐☐

DEALER NAME: _____

ADDRESS: _____
STREET ADDRESS

_____
CITY, STATE, ZIP CODE

TELEPHONE: ( ) _____
AREA CODE, TELEPHONE NUMBER

CONTACT: _____
FIRST NAME, LAST NAME

MAIL (*DO NOT FAX*) THE COMPLETED REQUEST FORM WITH THE OLD LABEL TO:

TOYOTA MOTOR SALES, U.S.A. INC.
TECHNICAL COMPLIANCE DEPARTMENT, S207
19001 S. WESTERN AVENUE
TORRANCE, CA 90509–2991

TOYOTA

Technical Service BULLETIN

January 18, 2002

Title:

REPLACEMENT VIN PLATES

Models:

All Models

TSB

PG009-02

PRODUCT GENERAL INFORMATION

TSB UPDATE NOTICE:

The information contained in this TSB updates PG007–01 dated May 4, 2001. Revised text is red and underlined. The changes will take place February 1, 2002.

Introduction

Replacement **VIN** plates (metal plates riveted to dashboard) **may be** available from Toyota providing the request meets the criteria listed below.

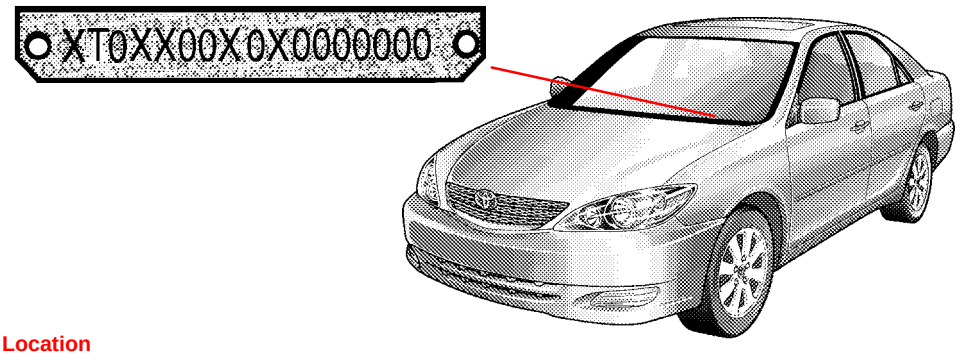

VIN Plate Location

Applicable Vehicles

- All Toyota vehicles.

Replacement VIN Plate Criteria

- The vehicle is in an accident and the plate is damaged.

NOTE:

The original plate to be replaced MUST accompany the request.

NOTE:

If a plate is stolen, be sure to contact the State Police or your State's Department of Motor Vehicles (DMV). In most cases the State DMV will issue a unique number so that the original number can be included on stolen vehicle listings. If this is the case, a replacement plate is NOT available from Toyota. However, the original VIN, NOT the state issued VIN, must be used on all warranty claims.

Procurement Procedure

To request a replacement plate, complete a copy of the form on the back of this page. Note that the damaged VIN plate **MUST** accompany the request form. Your dealer parts account will be billed $25.00 for each replacement of a damaged plate.

NOTE:

All replacement plates for damaged and/or stolen vehicles are subject to approval by the Technical Compliance Department. If you have any specific questions, contact (310) 468–3390.

Warranty Information

OP CODE	DESCRIPTION	TIME	OPN	T1	T2
N/A	Not Applicable to Warranty	–	–	–	–

APPLICATION FOR REPLACEMENT VIN PLATE

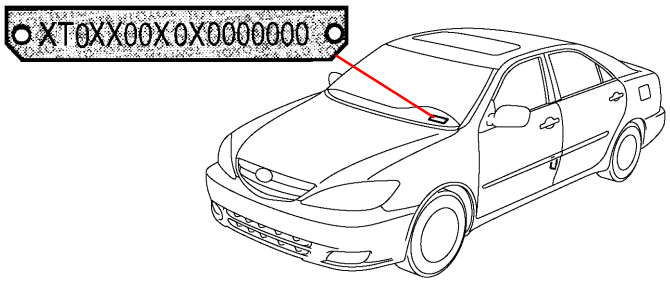

REASON FOR REPLACEMENT

☐ ACCIDENT DAMAGE

☐ OTHER _____

REASON/EXPLANATION

PLEASE PROVIDE CORRECT VIN _ _ _ _ _ _ _ _ _ _ _ _ _ _ _ _ _



DEALER INFORMATION

DEALER CODE: ☐☐☐☐☐

DEALER NAME: _____

ADDRESS: _____

STREET ADDRESS

_____

CITY, STATE, ZIP CODE

TELEPHONE: ( ) _____

AREA CODE, TELEPHONE NUMBER

CONTACT: _____

FIRST NAME, LAST NAME

MAIL (*DO NOT FAX*) THE COMPLETED REQUEST FORM WITH THE OLD PLATE TO:

TOYOTA MOTOR SALES, U.S.A. INC.
TECHNICAL COMPLIANCE DEPARTMENT, S207
19001 S. WESTERN AVENUE
TORRANCE, CA. 90509–2991

TOYOTA

Technical Service BULLETIN

January 26, 2001

Title:

SEAT BELT EXTENDER

Models:

'99 – '01 Model Year

TSB

BODY

BO002-01

TSB UPDATE NOTICE:

The information contained in this TSB updates BO020–00 dated August 11, 2000. Revised text is red and underlined.

Introduction

Toyota customers who find it necessary to increase the length of their seat belts may obtain Seat Belt Extenders at **no cost** through their local Toyota dealer.

- The extender is available in 6 inch, 9 inch, 12 inch, 15 inch and 18 inch lengths.
- The extender is available **only in black.**
- Owners are informed of the Seat Belt Extender availability through the Toyota Owner's Manual included in each vehicle.

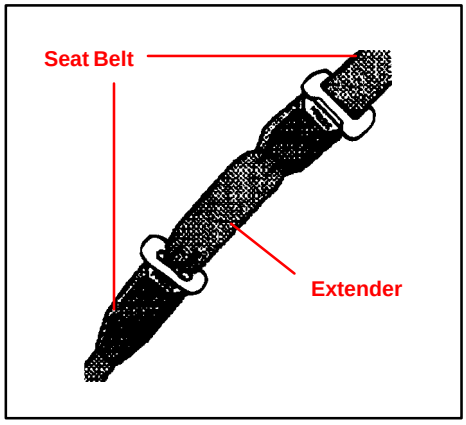

The customer (individual requiring the extender) must visit a Toyota dealership to have the required measurements made and to complete the Seat Belt Extender worksheet. The worksheet will allow the proper fitting and selection of a Seat Belt Extender for the customer. The dealership personnel should then determine the applicable part number and place a ***Critical Order*** through the ***TDN Parts Network.***

The dealership service department should complete the affixed Seat Belt Extender Customer Information Label and review the "Owner Instruction Sheet" with the customer. The dealership should give a copy of the completed worksheet to the customer and keep the original in the customer's file.

To assure utmost owner satisfaction, it is recommended that a dealership designate one person to coordinate all activities related to the Seat Belt Extender issue.

It is recommended that dealerships **do not stock** Seat Belt Extenders due to the need for proper fitting to individual customers.

This bulletin contains the following information:

Procedure and Sample Label . . . . . Page 2
Application Charts . . . . . Pages 3–4
Part Number Information . . . . . Page 5
Owner Instructions . . . . . Page 6
Seat Belt Extender Worksheet . . . . . Page 7

Applicable Vehicles

- **1999** through **2001** model year **Toyota** vehicles.

Warranty Information

OP CODE	DESCRIPTION	TIME	OPN	T1	T2
N/A	Not Applicable to Warranty	–	–	–	–

Procedure

1. Owner requests a Seat Belt Extender from dealer.
2. Dealer verifies the need for a Seat Belt Extender and obtains a current copy of this TSB and copies the Worksheet.
3. Dealer measures the customer and completes the Worksheet. Dealer determines the correct part number and places a Critical Order for the part through the TDN Parts Network.
4. Dealer receives Seat Belt Extender and calls the customer in to check fit of the part.
5. If the Seat Belt Extender fit is good, dealership personnel completes the Customer Information Label on the part, explains usage of the part, and gives the customer a copy of the completed Worksheet.
6. Dealer places copy of the completed Worksheet in the customer's records.

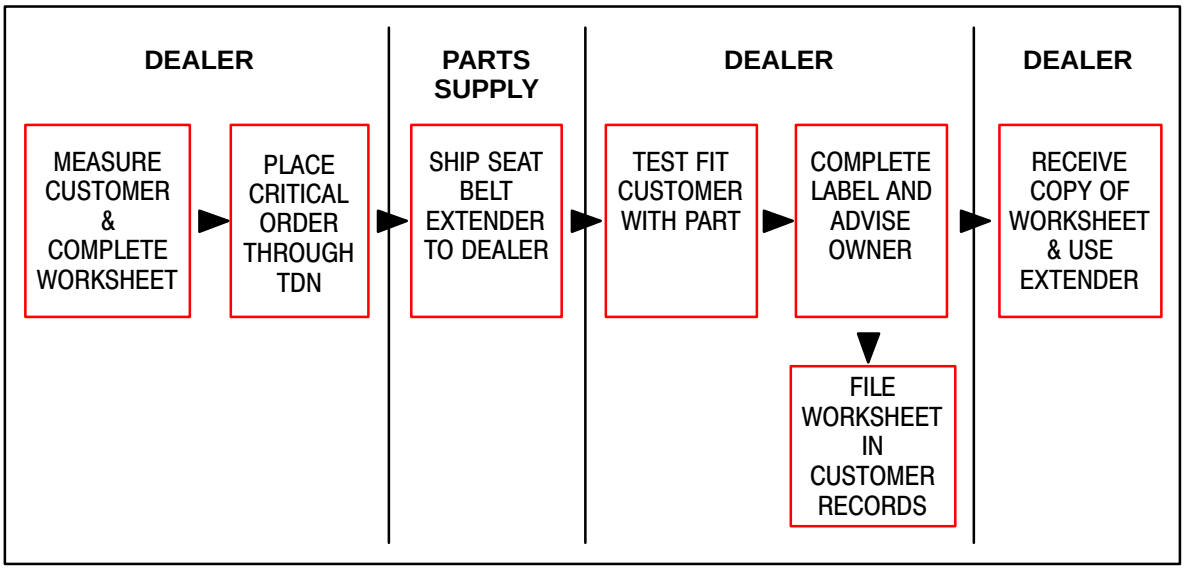

Sample Seat Belt Extender Customer Information Label

CAUTION

THIS SEAT BELT EXTENDER IS TO BE USED ONLY BY: _____

ON VEHICLE: _____

VIN: _____

SEATING POSITION: _____

USE BY OTHERS, OR IN ANOTHER SEATING POSITION, OR IN ANOTHER VEHICLE COULD REDUCE SEAT BELT RESTRAINT IN AN ACCIDENT AND RESULT IN PERSONAL INJURY.

Front Seat Belt Extender Applications

FRONT SEAT – EXTENDER APPLICATION				
MODEL	**TYPE**	**'01**	**'00**	**'99**
RAV4	–	R–5	R–5	R–5
ECHO	–	K–5	K–5	–
COROLLA	TMMC PRODUCTION	Q–4	Q–4	Q–4
	NUMMI PRODUCTION			
PRIUS	–	N–7	–	–
MR2 SPYDER	–	N–6	N–6	–
CELICA	LIFTBACK & COUPE	N–6	N–6	N–6
	CONVERTIBLE	–	–	
CAMRY	TMC PRODUCTION	Q–4	Q–4	Q–4
	TMMK PRODUCTION			
CAMRY SOLARA	COUPE	Q–4	Q–4	Q–4
	CONVERTIBLE			–
AVALON*	–	T–1	T–1	Q–2
SIENNA	–	Q–4	Q–4	Q–4
TACOMA*	–	S–2	S–1	S–1
4RUNNER	–	K–5	K–5	K–5
LAND CRUISER	–	K–5	K–5	K–5
SEQUOIA	–	Q–4	–	–
TUNDRA*	–	Q–4	Q–4	–
HIGHLANDER	–	R–5	–	–

* The extender must not be used for the center seat of Avalon, Tacoma, and Tundra which have bench seats.

Rear Seat Belt Extender Applications

REAR SEAT – EXTENDER APPLICATION				
MODEL	**TYPE**	**’01**	**’00**	**’99**
RAV4	W/TOKAI RIKA	R–5	R–5*1	R–5*1
	W/QSS	–	Q–4*2	Q–4*2
ECHO	–	R–5	R–5	–
COROLLA	TMMC PRODUCTION	Q–4	Q–4	Q–4
	NUMMI PRODUCTION	T–1	T–1	T–1
PRIUS	–	N–7	–	–
CELICA	LIFTBACK & COUPE	N–6	N–6	N–6
	CONVERTIBLE (RH)	–	–	N–1
	CONVERTIBLE (LH)			N–5
CAMRY	TMC PRODUCTION	Q–4	Q–4	Q–4
	TMMK PRODUCTION			
CAMRY SOLARA	COUPE	Q–4	Q–4	Q–4
	CONVERTIBLE			–
AVALON	–	T–1	T–1	Q–2
SIENNA	–	Q–4	Q–4	Q–4
TACOMA	XTRACAB	A–2	A–2	A–2
4RUNNER	–	R–5	R–5	R–5
LAND CRUISER	–	K–5	K–5	K–5
SEQUOIA	REAR SEAT #1	T–1	–	–
	REAR SEAT #2	Q–4		
TUNDRA	ACCESS CAB	Q–4	Q–4	–
HIGHLANDER	–	R–5	–	–

*1 This seat belt was supplied by TOKAI RIKA. Make sure that the I/D mark on the back side of the seat belt buckle is the same as shown.

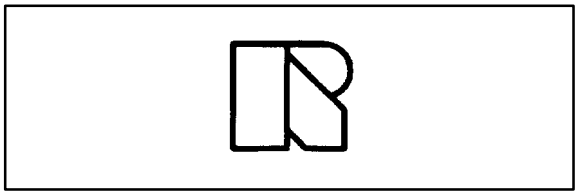

*2 This seat belt was supplied by QSS. Make sure that the I/D mark on the back side of the seat belt buckle is the same as shown.



NOTE:

The seat belt extender must not be used for the center rear seat belt.

Part Number Information

PART NUMBER PREFIX: 73399–					
SERIES	**LENGTH**				
	6 INCH	**9 INCH**	**12 INCH**	**15 INCH**	**18 INCH**
R–5	–16060	–16070	–16080	–16090	–16100
N–1	–12060	–12070	–12080	–12090	–12100
N–5	–20110	–20120	–20130	–20140	–20150
N–6	–20160	–20170	–20180	–20190	–20200
N–7	–47010	–47020	–47030	–47040	–47050
K–5	–35010	–35020	–35030	–35040	–25050
A–2	–01060*****	–01070	–01080	–01090	–01100
Q–2	–06010	–06020	–06030	–06040	–06050
Q–4	–0W010	–0W020	–0W030	–0W040	–0W050
S–1	–04010	–04020	–04030	–04040	–04050
S–2	–04060	–04070	–04080	–04090	–04100
T–1	–01110	–01120	–01130	–01140	–01150

***** Length: 7-1/4”

Owner Instructions

Failure to follow the recommendations indicated below could result in reduced effectiveness of the seat belt restraint system in case of vehicle collision, causing personal injury.

The Seat Belt Extender must not be used:

a. By anyone other than for whom it was provided (name recorded on seat belt extender).

b. In any vehicle and/or seat position other than the one for which it was provided.

c. When the Seat Belt Extender is provided for rear seat positions (with automatic locking retractor), make sure the retractor is locked when in use.

If your seat belt cannot be fastened securely because it is not long enough, a personalized Seat Belt Extender is available from your Toyota dealer free of charge.

Please contact your local Toyota dealer so that the dealer can order the proper required length for the extender. Bring the heaviest coat you expect to wear for proper measurement and selection of length. Additional ordering information is available at your Toyota dealer.

CAUTION:

When using the Seat Belt Extender, observe the following. Failure to follow these instructions could result in reduced effectiveness of the seat belt restraint system in case of vehicle accident, increasing the chance of personal injury.

- **Never use the Seat Belt Extender if you can COMFORTABLY fasten the seat belt without it.**
- **The Seat Belt Extender must never be used with any child safety seats.**
- **Remember that the extender provided for you may not be safe when used on a different vehicle, or for another person or at a different seating position than the one originally intended for.**

To connect the extender to the seat belt, insert the tab into the seat belt buckle so that the "PRESS" signs on the buckle-release buttons of the extender and the seat belt are both facing outward as shown.

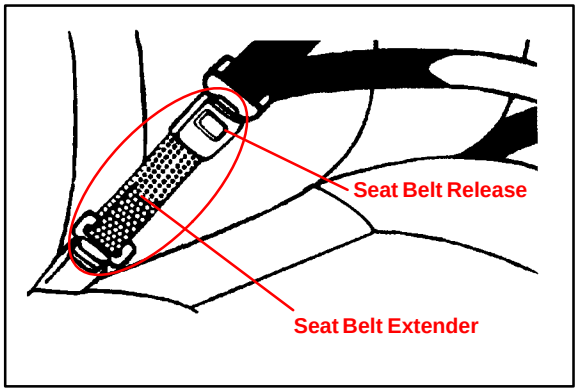

You will hear a click when the tab locks into the buckle.

When releasing the seat belt, press on the buckle-release button on the extender, not on the seat belt. This helps prevent damage to the vehicle interior and extender itself.

When not in use, remove the extender and store in the vehicle for future use.

PLEASE COPY THIS ORIGINAL WORKSHEET FOR EACH EXTENDER NEEDED

CAUTIONS:

- **To minimize the chance and/or severity of injury in an accident, the Seat Belt Extender must only be used:**
  1 **By the person for whom it was provided.**
  2 **In the seat position for which it was provided.**
- **The Seat Belt Extender must never be used with any child safety seats.**
- **When the Seat Belt Extender is provided for rear seat positions (with automatic locking retractor), make sure the retractor is locked when extender belt is in use.**

DEALER			SEAT BELT EXTENDER APPLICATION		APPLICANT	
DEALER CODE	DEALER NAME			APPLICANT NAME		
ADDRESS				ADDRESS		
CITY & STATE		ZIP		CITY & STATE	ZIP	PHONE
EMPLOYEE NAME	MODEL YEAR	BODY TYPE		SEATING POSITION	VEHICLE IDENTIFICATION NUMBER	

DIRECTIONS FOR DETERMINING PROPER EXTENDER LENGTH

1. **Place the seat in the position the applicant normally uses.**
2. **With the applicant in the seat, wearing the thickest coat expected to be worn, pull belt all the way out and try to buckle belt.**
   - **If belt latches into buckle and feels comfortable against upper chest area, an extender is not needed.**
   - **If belt does not buckle, continue with Step 3.**
   - **If buckle latches but belt has no slack remaining, continue with Step 3.**
3. **Measure distance between applicant's navel and seat belt buckle (Dimension A) and enter on Worksheet.**
4. **With belt all the way out, measure distance between latch tip and buckle tip (Dimension B) and enter on Worksheet.**
   NOTE: If belt latches but there is no slack enter zero as Dimension B.
5. **Subtract Dimension B from Dimension A and record number in Check Number box on Worksheet.**
6. **Seat Belt Extender length is Dimension B rounded up to next extender length (without exceeding Check Number).**
   NOTE: If extender length exceeds Check Number, an extender <u>cannot</u> be provided to the customer.

Dimension A:
NAVEL TO BUCKLE

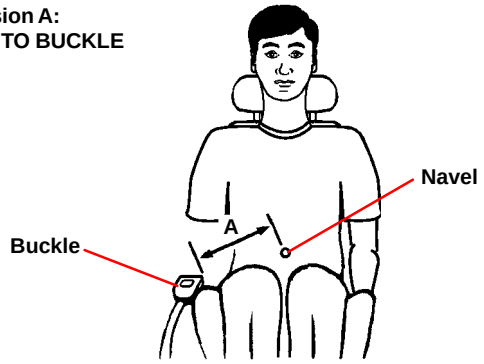

Dimension B:
LATCH TO BUCKLE

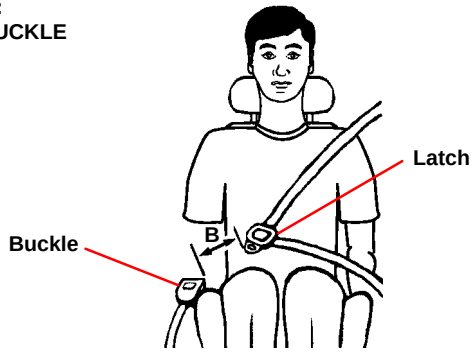

SEAT BELT EXTENDER CALCULATION

DIMENSION A:	DIMENSION B:	CHECK NUMBER:

SEAT BELT EXTENDER AUTHORIZATION

- ***The same Seat Belt Extender can be used for right and left seating applications.*** **Each Seat Belt Extender will have a label identifying the owner, VIN and seating position. Seat Belt Extenders are available only in black.**
- **Applicant's Signature:**_____ **Date:**_____
  (Actual user of seat belt extender)

TOYOTA

Technical Service BULLETIN

September 15, 2000

Title:

SPECIAL SERVICE TOOLS

Models:

All '00 Models & '01 Prius

TSB

SS001–00

SPECIAL SERVICE TOOLS

Introduction

This TSB contains information regarding Special Service Tools (SSTs) distributed or added to the SST program during the 2000 model year as well as those regarding 2001 model year Prius. Both the Essential and Available SSTs are listed by tool number, tool name, and model application.

Special Service Tools can be ordered through the Toyota SST Program by calling 1–800–933–8335.

Applicable Vehicles

- **All 2000** model year **Toyota vehicles** and **2001** model year **Prius vehicles.**

2000 MY Essential Special Service Tools

2000 MY ESSENTIAL SPECIAL SERVICE TOOLS		
TOOL NUMBER	**TOOL NAME**	**APPLICATION**
01002593–005	**12 Mega–Byte Program Card** For Diagnostic Tester 	All
09612–10022–02	**Hexagon Wrench** 	Celica/Sienna
09616–00010–02	**Steering Worm Bearing Adjusting Socket** 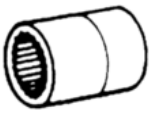	Celica/Sienna
09922–10010–01	**Variable Open Wrench** 	Celica/Sienna
09023–12900–01	**Power Steering Hose Nut Wrench** 	ECHO
09202–00020–01	**Valve Spring Compressor Adapter** 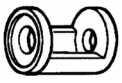	Celica
09520–01010–02	**Drive Shaft Remover Attachment** Includes: Hook and Silhouette Set 	RAV4
09628–00011–01	**Ball Joint Puller** Includes: Power Unit (09628–00030–01), Jaw (09628–00040–01) & Claw A (09628–00050–01) 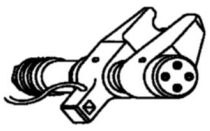	ECHO

2000 MY Essential Special Service Tools (Continued)

2000 MY ESSENTIAL SPECIAL SERVICE TOOLS		
TOOL NUMBER	**TOOL NAME**	**APPLICATION**
00002–TR815X–00	**Midtronics Battery Instructions Card** 	All
09670–00010–01	**Front Crossmember Guide Tool** 	ECHO
09248–77010–01	**Valve Clearance Adjusting Compressor Set** Includes: Valve Clearance Adjusting Compressor (09248–07010–01), Adjusting Shim Remover (09248–07020–01), & Hook and Silhouette Set 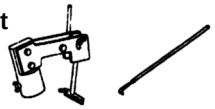	Celica
00002–6872A–01	**EVAP System Tester** 	All
00002–6872A–ADP	**EVAP Brass Fitting** 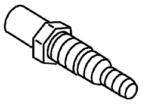	All
09710–04101–01	**Front Speed Sensor Installer** Includes: Hook and Silhouette Set 	MR2
09230–00050–01	**Cooling System/Reservoir Cap Pressure Test Adapter Kit** Includes: Hook & Silhouette Set (09231–10110–01) Reservoir Cap Pressure Test Adapter (09231–10120–01)Cooling System Pressure Test Adapter 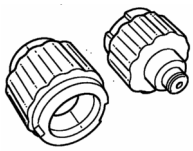	Celica/MR2
09737–00020–01	**Brake Booster Push Rod Wrench** Includes: Hooks & Decals 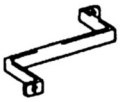	Tundra
09737–00011–01	**Brake Booster Push Rod Gauge** Includes: Hooks & Decals 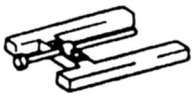	Tundra
09950–50012–020	**Puller Set C Update Kit** Includes: Attachment (09957–04010–01), 30mm Claw (09954–05050–01), 100mm Claw (09954–05060–01), Inside & Outside Lid Labels, and SST Pins 	All
00002–0274	**Engine Support Bar** 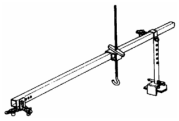	RAV4
2002784	**Scan Tool Operation Manual Contents** 	All
09950–40010–010	**Puller Set B Update Kit** Includes: Holder Bolts (09958–04011–01), 200mm Arm Set (09954–04040–01), Claw Set #3 (09955–04031–01), Claw Set #5 (09955–04051–01), Claw Set #7 (09955–04071–01), Inside & Outside Lid Labels, and SST Pins 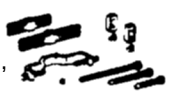	All

2000 MY Essential Special Service Tools

2000 MY ESSENTIAL SPECIAL SERVICE TOOLS		
TOOL NUMBER	**TOOL NAME**	**APPLICATION**
09727–30050–01	**Toe Control Link Replacer Kit** Includes: Toe Control Link Compressor Art (09727–00031), Toe Control Link Replacer Arm No. 1 (09711–40010) 09710–40010, Toe Control Link Replacer Arm No. 2 (09712–40010) 09710–40010, & Bolt Set (09727–00010) 	Prius*
09388–40010	**Input Shaft Oil Seal Replacer** 	Prius*
00002–03100–S(Small) 00002–03200–M(Medium) 00002–03300–L(Large)	**Safety Gloves** 	Prius*
00002–YA121–01	**Automatic Trickle Charger** 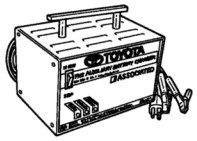	Prius*

* Prius Dealers Only.

2000 MY Essential Special Service Tools

2000 MY ESSENTIAL SPECIAL SERVICE TOOLS		
TOOL NUMBER	**TOOL NAME**	**APPLICATION**
07112–76050	**Magnetic Clutch Stopper** 	ECHO
09612–20010	**Power Steering Oil Seal Puller** 	Celica
09930–00010	**Drive Shaft Nut Chisel** 	ECHO/Celica
09617–35020	**Power Steering Ring Nut Wrench** 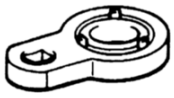	Celica
09951–07100–01	**Drive Handle** 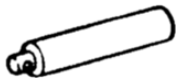	Sienna
0002–17750	**Seat Heater Attachment Kit** Includes: Seat Heater Attachment Tool (0002–17750), & Fasteners, Qty. 10,000 (0002–16500) 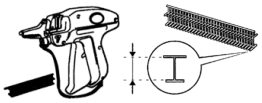	All
00002–01780	**Seat Heater Attachment Tool Replacement Needles, Qty. 4** 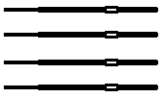	All
03001042–000	**Scan Tool Replacement Battery Pack** 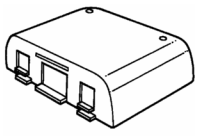	All

TOYOTA

Technical Service BULLETIN

October 6, 2000

Title:

EVAP SYSTEM PRESSURE TESTER IMPROVEMENT

Models:

All '00 Models

TSB

SS003–00

SPECIAL SERVICE TOOLS

Introduction

In an effort to expand the diagnostic capabilities of the EVAP System Pressure Tester and prevent inadvertent misuse of the tester pressure pump, the EVAP System Pressure Tester Kit, P/N 00002–6872A has been upgraded with the following components:

- New EVAP Lid Instructions
- Pump Outlet Hose Tie Wrap
- EVAP Brass Adapter

The information contained in this bulletin will provide you with a detailed outline for the procedures to upgrade the EVAP System Pressure Tester Kit.

Applicable Vehicles

- **2000** model year **Toyota vehicles, all models.**

Parts Information

PREVIOUS PART NUMBER	CURRENT PART NUMBER	PART NAME
N/A	00002–6872A–DEC	EVAP System Tester Kit Lid Instructions Decal
	00002–6872A–TIE	Pump Outlet Hose Tie Wrap
	00002–6872A–ADP	EVAP Brass Adapter

NOTE:

The upgraded EVAP components will be distributed to all Toyota dealers by OTC. Replacement EVAP System Tester parts may be ordered by calling OTC at: 1 (800) 933–8335.

Required Tools & Materials

TOOLS & MATERIALS	QUANTITY
Side Cutting Pliers	1

Warranty Information

OP CODE	DESCRIPTION	TIME	OPN	T1	T2
N/A	Not Applicable to Toyota Warranty*	–	–	–	–

***Applicable Warranty:**

With the LIFETIME MARATHON™ WARRANTY, all SPX OTC products and parts are warranted against defects in materials and workmanship for the life of the product or part. For service on this or any other Toyota SST, call 1 (800) 933–8335.

Part Upgrade Description

EVAP System Tester Kit Lid Instructions Decal

This decal will replace the existing decal that is located on the inside lid of the EVAP tester case. The revised decal will provide a new diagram with a clear layout for hooking up the new EVAP brass adapter as well as a revised diagram for hook–up of the gas cap tester.

Pump Outlet Hose Tie Wrap

The tie wrap will be used to secure the pump outlet hose that is located on the air pump of the EVAP System Tester Kit. The pump outlet hose must be secured with a tie wrap to discourage improper hose removal/attachment.

EVAP Brass Adapter

The new EVAP brass adapter will enable technicians to perform enhanced pinpoint testing. This brass adapter is a multi–sized hose fitting that can adapt to various sized hoses and will simply screw directly onto the threaded end of the tester hose.

Replacement Procedure

EVAP Lid Instructions

1. Remove the old EVAP System Tester Lid Instruction Decal completely.
2. Make sure that the application area is clean of debris and dry.
3. Place the new EVAP System Tester Lid Instruction Decal (P/N 00002–6872A–DEC) where the previous decal was located.

Pump Outlet Hose Tie Wrap Installation

1. Place the pump outlet hose tie wrap (P/N 00002–6872A–TIE) around the pump outlet hose.
2. Tighten the tie wrap until the hose is secure and cannot be removed.
3. Trim the excess tie wrap length using a pair of side cutting pliers.

NOTE:
The hose should not be removed for this tie wrap installation procedure.

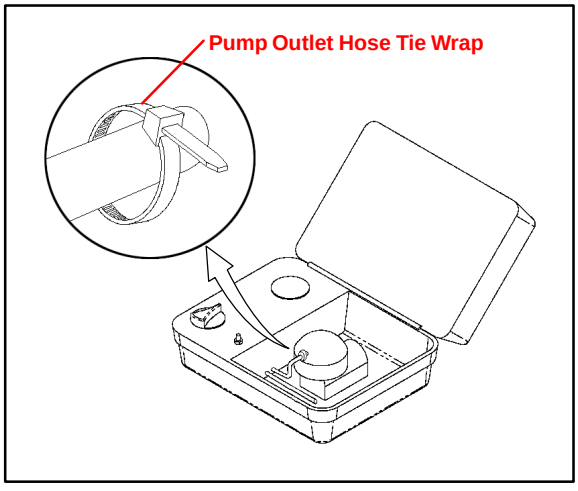

Component Application

EVAP Brass Adapter

Refer to diagram for proper hook–up of the EVAP brass adapter.

> **NOTE:**
> **The EVAP brass adapter was designed to plug into multi–sized hoses for pinpoint diagnosis.**

EVAP Brass Adapter Hook–Up

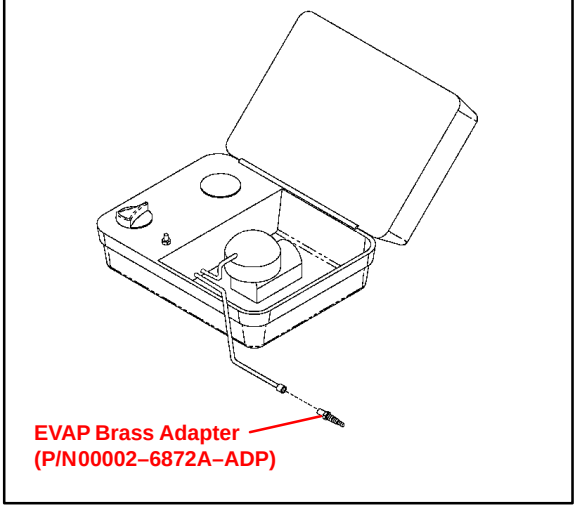

Fuel Tank Adapter

Refer to diagram for proper hook–up of the fuel tank adapter.

> **NOTE:**
> **Part number J–41415–30 includes both the fuel tank adapter and the fuel cap adapter.**

Fuel Tank Adapter Hook–Up

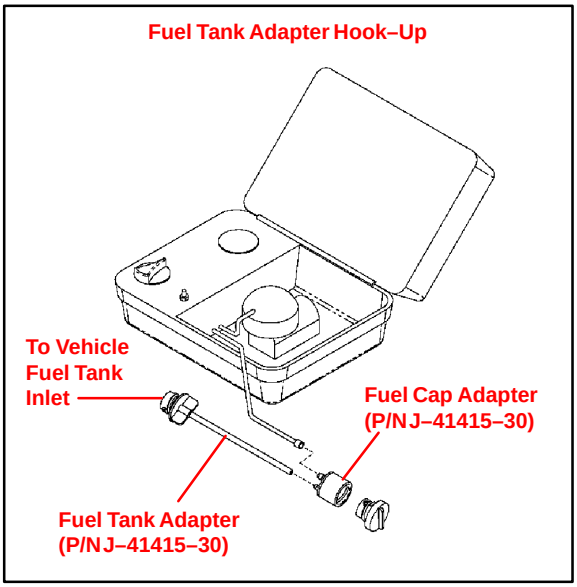

Fuel Cap Adapter

Refer to diagram for proper hook–up of the fuel cap adapter.

Fuel Cap Adapter Hook–Up

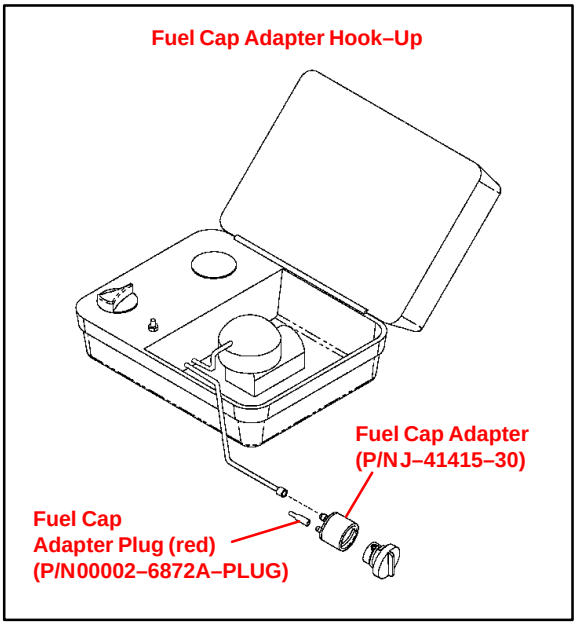

TOYOTA

Technical Service BULLETIN

February 16, 2001

Title:

STEERING WHEEL NUT SERVICE SPECIFICATION

Models:

All Applicable Models

TSB

Introduction

To make the steering wheel installation procedure similar for all models, the steering wheel nut tightening torque has been standardized.

Applicable Vehicles

MODEL		MODEL YEARS
TERCEL	EL42, 53	1991 – 1998
ECHO	NCP12	2000
PASEO	EL44, 54	1992 – 1997
COROLLA	AE10#, ZZE110	1993 – 2001
CELICA	AT180, ST18#, AT2#, ST2#, ZZT23#	1990 – 2000
MR2	SW2#, ZZW30	1991 – 1995; 2000
CAMRY	SXV10, 20, MCV10, 20	1992 – 2000
CAMRY CNG	SXV23	2000 – 2001
CAMRY SOLARA	SXV20, MCV20	1999 – 2000
AVALON	MCX10, 20	1995 – 2000
SUPRA	JZA80	1993 1/2 – 1998
RAV4	SXA1#	1996 – 2000
RAV4 EV	BEA11	1998 – 2000
PREVIA	TRC10, 20	1991 – 1997
SIENNA	MCL10	1998 – 2000
HIGHLANDER	ACU20, 25, MCU20, 25	2001
4RUNNER	RN12#, 13#, VZN12#, 13#, 18#, RZN180, 185	1990 – 2000
LAND CRUISER	FZ80, FZJ80, UZJ100	1991 – 2000
TRUCK	RN8#, 9#, 10#, 110, VZN85, 9#, 10#, 110	1989 – 1995
TACOMA	RZN140, 150, 161, 171, 19#, VZN150, 160, 170, 195	1995 1/2 – 2000
T100	VCK10, 20	1993 – 1998
TUNDRA	VCK30, 40, UCK30, 40	2000

Warranty Information

OP CODE	DESCRIPTION	TIME	OPN	T1	T2
N/A	Not Applicable to Warranty	–	–	–	–

Service Information

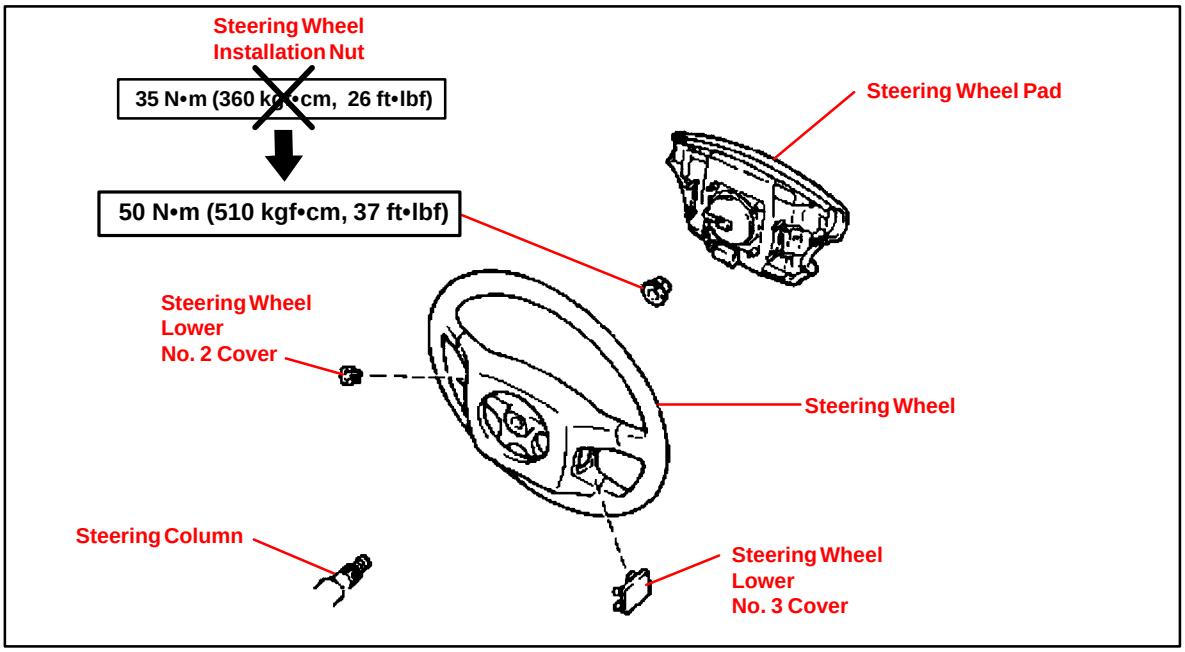

TOYOTA

Technical Service BULLETIN

May 24, 2002

Title:

AUTOMATIC TRANSMISSION FLUID REQUIREMENTS

Models:

All ’00 – ’02 Models & ’03 Corolla & Matrix

TSB

Introduction

Please refer to the following table for correct application of Dexron® III (Dexron® II) and Toyota Type T–IV Automatic Transmission Fluids or equivalent.

MODEL	2000	2001	2002	2003
Avalon	A541E	A541E	A541E	N/A
Camry	A140E, A541E	A140E, A541E	U140E, U241E	N/A
Celica	U240E, U341E	U240E, U341E	U240E, U341E	N/A
Corolla	A131L, A245E	A131L, A245E	A131L, A245E	A245E
ECHO	U340E	U340E	U340E	N/A
Highlander	N/A	U140E, U140F, U241E	U140E, U140F, U241E	N/A
Land Cruiser	A343F	A343F	A343F	N/A
RAV4	A247E / A540H	U140F, U241E	U140F, U241E	N/A
Sequoia	N/A	A340E, A340F	A340E, A340F	N/A
Sienna	A540E	A541E	A541E	N/A
Solara	A140E, A541E	A140E, A541E	A140E / U241E	N/A
Tacoma	A340E, A340F, A43D	A340E, A340F, A44D	A340E, A340F, A44D	N/A
Tundra	A340E, A340F	A340E, A340F	A340E, A340F	N/A
4Runner	A340E, A340F	A340E, A340F	A340E, A340F	N/A
Matrix	N/A	N/A	N/A	A246E
Matrix	N/A	N/A	N/A	U240E
Matrix	N/A	N/A	N/A	U341F
Prius	N/A	P111	P111	N/A

LEGEND
Type T–IV Fluid
Dexron® III (Dexron® II)

Parts Information

PART NUMBER	PART NAME
08886–81015	ATF Type T–IV
00718–ATF00	Dexron® III (Dexron® II)

Warranty Information

OP CODE	DESCRIPTION	TIME	OPN	T1	T2
N/A	Not Applicable to Warranty	–	–	–	–

TOYOTA

Technical Service BULLETIN

May 21, 1999

Title:

AUTOMATIC TRANSMISSION FLUIDS

Models:

All Models

TSB

REVISION NOTICE:

The information contained in this TSB updates TC003–98 dated June 19, 1998.

Introduction

Automatic Transmission Fluid Type T–IV now replaces Type T–II fluid. Use Type T–IV for all applications that specify ATF Type T–II.

Please refer to the following table for the interchangeability between each ATF.

Affected Vehicles

- **All vehicles produced after 1993 with Automatic Transmissions specified to use ATF Type T, T–II and T–IV.**

SPECIFIED ATF	TYPE OF ATF			
	DEXTRON® II OR III	TYPE T	TYPE T–II	TYPE T–IV
DEXTRON® II OR III	OK	X	X	X
TYPE T	X	OK	X	OK
TYPE T–II	X	X	OK	OK
TYPE T–IV	X	X	X	OK
X = NOT USABLE				

NOTICE:

With the exception of mixing ATF Type T with Type T–IV fluids, different types of fluids must not be mixed.

Parts Information

SIZE	NEW PART NUMBER	PART NAME
4 Liter	08886–01705	ATF Type T–IV

Warranty Information

OP CODE	DESCRIPTION	TIME	OPN	T1	T2
N/A	Not Applicable to Warranty	–	–	–	–

TOYOTA

Technical Service BULLETIN

December 15, 2004

Title:

A340 TRANSMISSION SOLENOID IDENTIFICATION

Models:

Applicable 4Runner, Sequoia, T100, Tacoma & Tundra

TSB

Introduction

This service bulletin provides information on the proper identification of the 4 solenoids used in an A340 transmission.

Applicable Vehicles

- **1990 – 2004** model year **4Runner** vehicles.
- **2001 – 2004** model year **Sequoia** vehicles.
- **1993 – 1998** model year **T100** vehicles.
- **1995 – 2005** model year **Tacoma** vehicles.
- **2000 – 2004** model year **Tundra** vehicles.

Parts Information

Provided below is a chart listing the Repair Manual name of each solenoid used in the A340 transmission as well as the part name description provided in the Electronic Parts Catalog.

REPAIR MANUAL SOLENOID NAME	ELECTRONIC PARTS CATALOG PART DESCRIPTION
S1	3 Way Transmission Solenoid
S2	Transmission Solenoid #3
SL	Clutch Control Solenoid
SLT	Line Pressure Control Solenoid

NOTE:

Part numbers have not been included due to possible future part number changes. Refer to the parts catalog for proper current part number.

Warranty Information

OP CODE	DESCRIPTION	TIME	OFP	T1	T2
N/A	Not Applicable to Warranty	–	–	–	–

Transmission Solenoid Identification

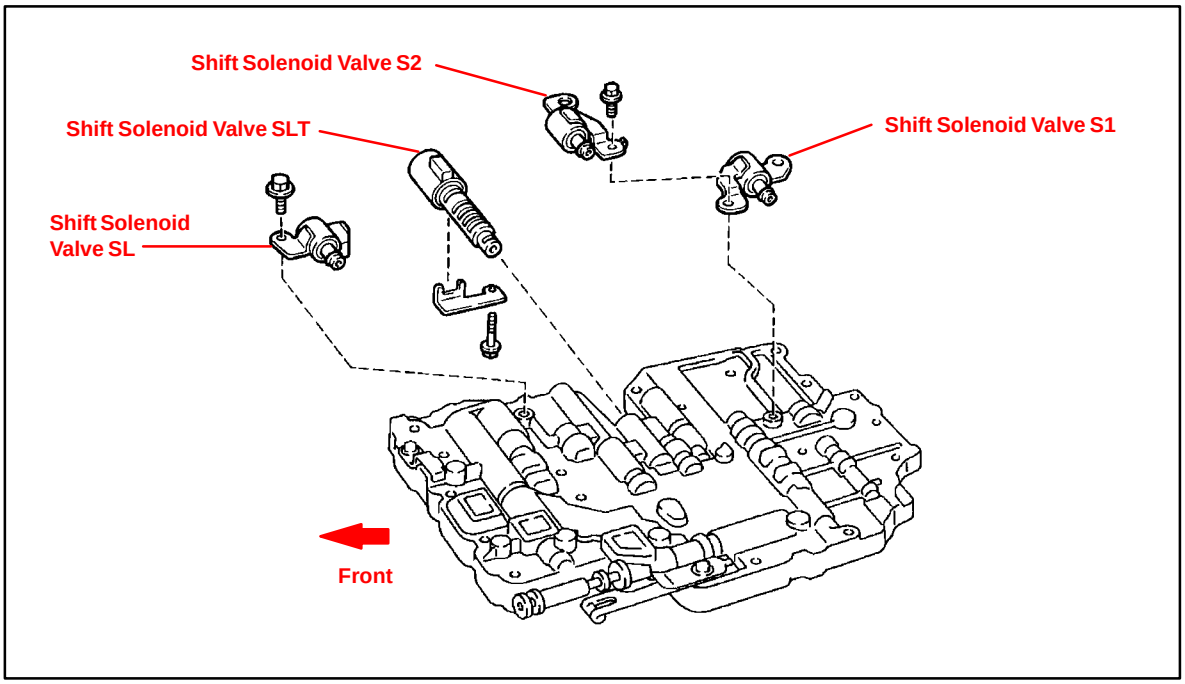

TOYOTA
SCION
Technical Service BULLETIN
June 10, 2003

Title:

ECM RESET MEMORY FUNCTION

Models:

'00 – '05 All Models & '04 – '05 Scion

TSB

REVISED

TC002-03

TRANSMISSION & CLUTCH

TSB REVISION NOTICE:

- **December 20, 2004: Applicable Vehicles section has been updated – Scion vehicles added, 2004 and 2005 model years added, models and model years updated for various models; and Reset Procedure 2 has been revised.**
- **January 16, 2004: Tundra vehicles were added to the Applicable Vehicles chart.**
- **December 17, 2003: T–100 vehicles were removed from the Applicable Vehicles chart.**

Previous versions of this TSB should be discarded.

Introduction

Whenever an automatic transmission is replaced, overhauled or individual components are replaced, use this procedure to clear Engine Control Module (ECM, SAE term: Powertrain Control Module, PCM) "Learned Values" to minimize subsequent performance concerns.

CAUTION:

Failure to follow the procedure below may lengthen the time to readjust the ECM "Learned Values," potentially resulting in performance concerns.

Required SSTs

SPECIAL SERVICE TOOLS (SSTs)	PART NUMBER	QUANTITY
Toyota Diagnostic Tester Kit* 	01001271	1
CAN Interface Module Kit* 	01002744	1
12 Megabyte Diagnostic Tester Program Card with version 12.01a Software (or later)* 	01002593-005	1

* Essential SSTs.

NOTE:

Additional Diagnostic Tester Kits, CAN Interface Modules, Program Cards or other SSTs may be ordered by calling SPX/OTC at 1-800-933-8335.

Warranty Information

OP CODE	DESCRIPTION	TIME	OFP	T1	T2
N/A	Not Applicable to Warranty	–	–	–	–

Applicable Vehicles

Refer to **Reset Procedure 1** for the following vehicles with Electronically Controlled Automatic Transmissions:

MODEL	ENGINE/ DRIVETRAIN	MODEL YEAR					
		2000	2001	2002	2003	2004	2005
4Runner	2UZ				■	■	■
	1GR						■
Avalon						■	■
Camry	3MZ					■	■
	2AZ			■	■	■	■
Celica		■	■	■	■	■	■
Corolla						■	■
ECHO		■	■	■	■	■	■
Highlander			■	■	■	■	■
Land Cruiser					■	■	■
Matrix	4WD				■	■	■
RAV4			■	■	■	■	■
Sequoia							■
Sienna						■	■
Solara	3MZ					■	■
	2AZ			■	■	■	■
Tacoma	1GR						■
Tundra							■
Scion xA						■	■
Scion xB						■	■
Scion tC							■

■ = Applicable model years

Applicable Vehicles (Continued)

Refer to **Reset Procedure 2** for the following vehicles with Electronically Controlled Automatic Transmissions:

MODEL	ENGINE/ DRIVETRAIN	MODEL YEAR					
		2000	2001	2002	2003	2004	2005
4Runner	3RZ	■					
	5VZ	■	■	■			
	1GR				■	■	
Avalon		■	■	■	■		
Camry	5S	■	■				
	1MZ	■	■	■	■		
Corolla		■	■	■	■		
Land Cruiser		■	■	■			
Matrix	FWD				■	■	■
RAV4		■					
Sequoia			■	■	■	■	
Sienna		■	■	■	■		
Solara	5S	■	■				
	1MZ	■	■	■	■		
Tacoma	2TR						■
		■	■	■	■	■	
Tacoma PreRunner		■	■	■	■	■	
Tundra		■	■	■	■	■	

■ = Applicable model years

Reset Procedure 1

1. Connect the Toyota Diagnostic Tester to the vehicle.
2. Reset the ECM (PCM). Refer to the procedures below.

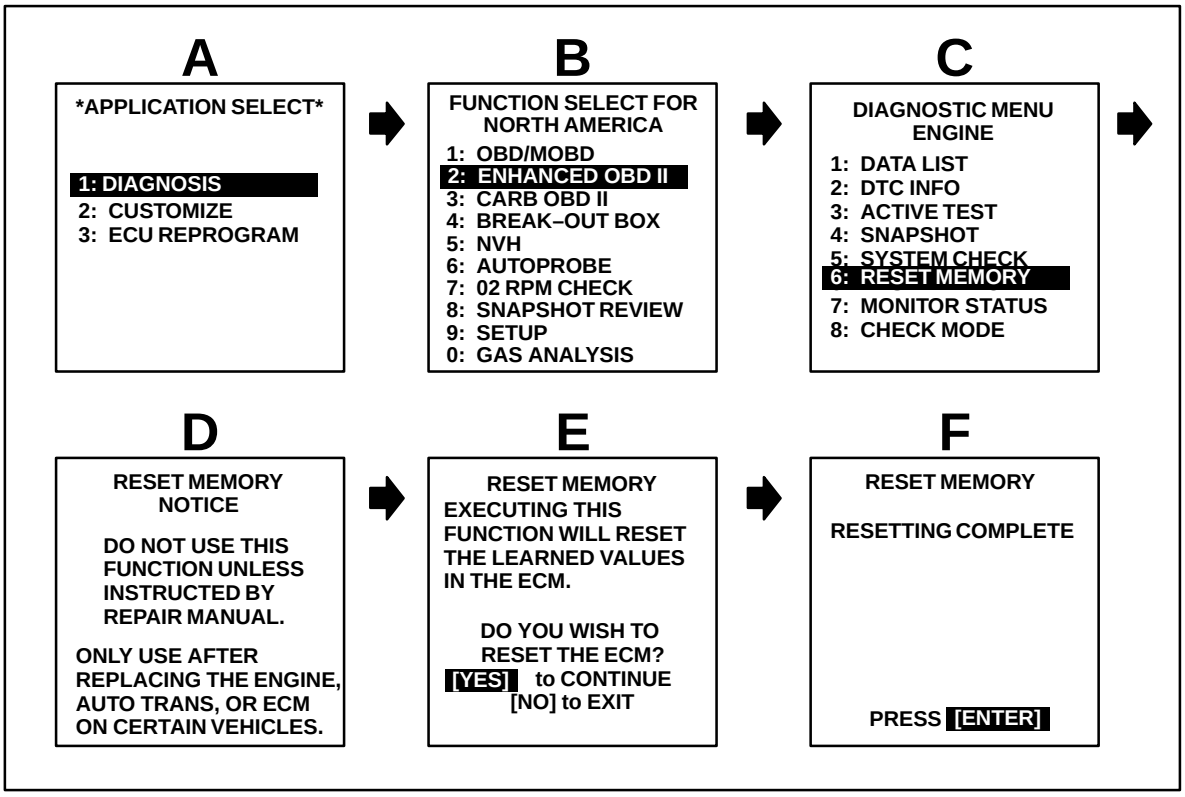

3. Start the engine and warm it up to normal operating temperatures before test–driving.
4. Perform a thorough test drive with several accelerations from a stop with “light throttle” application until proper transmission shifting is verified.

Reset Procedure 2

1. Disconnect the negative battery cable for 5 minutes.
2. Reconnect battery cable.
3. Start the engine and warm it up to normal operating temperatures before test–driving.
4. Perform a thorough test drive with several accelerations from a stop with “light throttle” application until proper transmission shifting is verified.

AIR CONDITIONING

SS04Z–01

SERVICE DATA

Refrigerant charge volume	600 ± 50 g (21.16 ± 1.76 oz.)
Drive belt tension	–
New belt	160 ± 25 lbf
Used belt	100 ± 20 lbf
Idle–up speed (2RZ–FE, 3RZ–FE)	–
Magnetic clutch not engaged	700 ± 50 rpm
Magnetic clutch engaged	900 ± 50 rpm
Idle–up speed (5VZ–FE)	–
Magnetic clutch not engaged	700 ± 50 rpm
Magnetic clutch engaged	850 ± 50 rpm
Magnetic clutch clearance	0.5 ± 0.15 mm (0.020 ± 0.0059 in.)

SS050–01

TORQUE SPECIFICATION

Part tightened	N·m	kgf·cm	ft·lbf
Compressor x Compressor bracket	25	250	18
Compressor bracket x Engine	47	475	34
Idle pulley lock nut	39	400	29
Compressor x Discharge hose	10	100	7
Compressor x Suction hose	10	100	7
Cooling unit x Suction tube	32	330	24
Cooling unit x Liquid tube	14	140	10
Expansion valve x Evaporator	5.4	55	48in.·lbf
Receiver x Liquied tube	6.0	60	52 in.·lbf
Condenser x Liquid tube	10	100	7
Condenser x Discharge hose	10	100	7
Pressure switch x Liquied tube	10	100	7
Pressure plate x Compressor	13.2	135	9

AUTOMATIC TRANSMISSION (A43D)

SS05G–01

SERVICE DATA

Governor pressure		
Tire size: P195/75R14	Output shaft rpm (Vehicle speed reference)	
	1,000 rpm (32 km/h, 20 mph)	98 – 157 kPa (1.0 – 1.6 kgf/cm^2, 14 – 23 psi)
	1,800 rpm (57 km/h, 35 mph)	196 – 255 kPa (2.0 – 2.6 kgf/cm^2, 28 – 37 psi)
	3,500 rpm (111 km/h, 69 mph)	500 – 618 kPa (5.1 – 6.3 kgf/cm^2, 73 – 90 psi)
Tire size: P21570R14	Output shaft rpm (Vehicle speed reference)	
	1,000 rpm (32 km/h, 20 mph)	98 – 157 kPa (1.0 – 1.6 kgf/cm^2, 14 – 23 psi)
	1,800 rpm (58 km/h, 36 mph)	196 – 255 kPa (2.0 – 2.6 kgf/cm^2, 28 – 37 psi)
	3,500 rpm (113 km/h, 70 mph)	500 – 618 kPa (5.1 – 6.3 kgf/cm^2, 73 – 90 psi)
Line pressure (Wheel locked)		
Engine idling	D position	441 – 500 kPa (4.5 – 5.1 kgf/cm^2, 64 – 73 psi)
	R position	667 – 745 kPa (6.8 – 7.6 kgf/cm^2, 97 – 108 psi)
A/T stall (Throttle valve fully opened)	D position	990 – 1,167 kPa (10.1 – 11.9 kgf/cm^2, 144 – 169 psi)
	R position	1,471 – 1,863 kPa (15.0 – 19.0 kgf/cm^2, 213 – 270 psi)
Engine stall revolution	D and R position	1,850 ± 150 rpm
Time lag	N → D position	Less than 1.2 seconds
	N → R position	Less than 1.5 seconds
Engine idle speed (A/C OFF)	N position	700 ± 50 rpm
Throttle cable adjustment (Throttle valve fully opened)		
	Between boot and face and inner cable stopper	0 – 1 mm (0 – 0.04 in.)
Drive plate runout	Maximum	0.20 mm (0.0079 in.)
Torque converter clutch sleeve runout	Maximum	0.30 mm (0.0118 in.)
Torque converter clutch installation distance		More than 31.75 mm (1.2500 in.)
Shift point		
D position		
(Throttle valve fully opened)	1 → 2	55 – 69 km/h (34 – 43 mph)
	2 → 3	101 – 116 km/h (63 – 72 mph)
	O/D → 3	*
	3 → 2	96 – 111 km/h (60 – 69 mph)
	2 → 1	44 – 57 km/h (27 – 35 mph)
(Throttle valve fully closed)	3 → O/D	43 – 55 km/h (27 – 34 mph)
L position		
(Throttle valve fully opened)	2 → 1	47 – 64 km/h (29 – 40 mph)

* O/D → 3 down–shift is possible up to maximum speed.

SS05H–01

TORQUE SPECIFICATION

Part tightened		N·m	kgf·cm	ft·lbf
Torque converter clutch x Drive plate		41	420	30
Drive plate x Crankshaft		74	750	54
Extension housing x Transmission case		36	370	27
Parking lock pawl bracket x Transmission case		7.4	75	65 in.·lbf
Valve body x Transmission case		10	100	7
Oil strainer x Valve body		5.4	55	48 in.·lbf
Oil pan		4.4	45	39 in.·lbf
Governor body		3.9	40	35 in.·lbf
Oil cooler pipe union nut		34	350	25
Oil cooler elbow		34	350	25
Park/neutral position switch	Bolt	5.4	55	48 in.·lbf
	Nut	3.9	40	35 in.·lbf
Drain plug		20	205	15
Extension housing x Rear mounting insulator		25	260	19
Rear mounting bracket x Rear support member		58	590	43
Rear mounting bracket x Rear mounting insulator		18	185	13
Stiffener plate x Engine		37	380	27
Stiffener x Torque converter clutch housing		37	380	27
Control shaft lever x Control cable		13	130	9
Transmission x Engine		71	730	53
Vehicle speed sensor		16	160	12
Starter x Transmission case		39	400	29

AUTOMATIC TRANSMISSION (A340E, A340F)

SS053–04

SERVICE DATA

Line pressure (Wheel locked)		
(3RZ–FE)		
	Engine idling	
	D position	382 – 441 kPa (3.9 – 4.5 kgf/cm^2, 55 – 64 psi)
	R position	539 – 637 kPa (5.5 – 6.5 kgf/cm^2, 78 – 92 psi)
	at stall (Throttle valve fully opened)	
	D position	1,098 – 1,235 kPa (11.2 – 12.6 kgf/cm^2, 159 – 179 psi)
	R position	1,382 – 1,716 kPa (14.1 – 17.5 kgf/cm^2, 201 – 249 psi)
(5VZ–FE)		
	Engine idling	
	D position	382 – 441 kPa (3.9 – 4.5 kgf/cm^2, 55 – 64 psi)
	R position	588 – 686 kPa (6.0 – 7.0 kgf/cm^2, 85 – 100 psi)
	at stall (Throttle valve fully opened)	
	D position	1,089 – 1,226 kPa (11.1 – 12.5 kgf/cm^2, 158 – 178 psi)
	R position	1,461 – 1,794 kPa (14.9 – 18.3 kgf/cm^2, 212 – 260 psi)
Engine stall revolution (D and R positions)	3RZ–FE	2,000 ± 150 rpm
	5VZ–FE	2,250 ± 150 rpm
Time lag	N → D position	Less than 1.2 seconds
	N → R position	Less than 1.5 seconds
Engine idle speed (A/C OFF and N position)		700 ± 50 rpm
Extension housing oil seal drive in depth from flat end		0 – 0.3 mm (0 – 0.012 in.)
Throttle cable adjustment		Between boot end face and inner cable stopper
(Throttle valve fully opened)		0 – 1 mm (0 – 0.04 in.)
Drive plate runout	Max.	0.20 mm (0.0079 in.)
Torque converter runout	Max.	0.30 mm (0.0118 in.)
Torque converter installation distance	3R–FE	More than 31.75 mm (1.2500 in.)
	5VZ–FE	More than 17.95 mm (0.7067 in.)

Lock–up point (NORM and PWR pattern)		
(3RZ–FE / A340E)	Tire size: 31 x 10.5R15 or P265 / 70R16	
D position		
(Throttle valve opening 5%)	Lock–up ON	82 – 86 km/h (51 – 53 mph)
	Lock–up OFF	75 – 79 km/h (47 – 49 mph)
(3RZ–FE / A340E)	Tire size: P225 / 75R15	
D position		
(Throttle valve opening 5%)	Lock–up ON	83 – 87 km/h (52 – 54 mph)
	Lock–up OFF	76 – 81 km/h (47 – 50 mph)
(3RZ–FE / A340F)	Tire size: 31 x 10.5R15	
D position		
(Throttle valve opening 5%)	Lock–up ON	76 – 81 km/h (47 – 50 mph)
	Lock–up OFF	70 – 75 km/h (44 – 47 mph)
(3RZ–FE / A340F)	Tire size: P225 / 75R15	
D position		
(Throttle valve opening 5%)	Lock–up ON	78 – 83 km/h (48 – 52 mph)
	Lock–up OFF	72 – 77 km/h (45 – 48 mph)
(5VZ–FE / A340E)	Tire size: 31 X 10.5R15	
D position		
(Throttle valve opening 5%)	Lock–up ON	73 – 78 km/h (45 – 48 mph)
	Lock–up OFF	66 – 71 km/h (41 – 44 mph)
(5VZ–FE / A340E)	Tire size: P225 / 75R15	
D position		
(Throttle valve opening 5%)	Lock–up ON	71 – 76 km/h (44 – 47 mph)
	Lock–up OFF	64 – 69 km/h (40 – 43 mph)
(5VZ–FE / A340F)	Tire size: 31 X 10.5R15	
D position		
(Throttle vale opening 5%)	Lock–up ON	73 – 78 km/h (45 – 48 mph)
	Lock–up OFF	66 – 71 km/h (41 – 44 mph)
(5VZ–FE / A340F)	Tire size: P225 / 75R15	
D position		
(Throttle vale opening 5%)	Lock–up ON	71 – 76 km/h (44 – 47 mph)
	Lock–up OFF	64 – 69 km/h (40 – 43 mph)

Shift schedule (NORM and PWR pattern)		
(3RZ–FE / A340E)	Tire size: 31 X 10.5R15 or P265 / 70R16	
D position		
(Throttle valve fully opened)	1 → 2	58 – 63 km/h (36 – 39 mph)
	2 → 3	107 – 114 km/h (66 – 71 mph)
	3 → O/D	141 – 149 km/h (88 – 93 mph)
	O/D → 3	135 – 142 km/h (84 – 88 mph)
	3 → 2	98 – 106 km/h (61 – 66 mph)
	2 → 1	46 – 51 km/h (29 – 32 mph)
(Throttle valve fully closed)	3 → O/D	34 – 38 km/h (21 – 24 mph)
	O/D → 3	25 – 30 km/h (16 – 19 mph)
2 position		
(Throttle valve fully opened)	1 → 2	58 – 63 km/h (36 – 39 mph)
	3 → 2	112 – 119 km/h (70 – 74 mph)
	2 → 1	46 – 51 km/h (29 – 32 mph)
L position		
(Throttle valve fully opened)	3 → 2	95 – 103 km/h (59 – 64 mph)
	2 → 1	54 – 58 km/h (34 – 36 mph)
(3RZ–FE / A340E)	Tire size: P225 / 75R15	
D position		
(Throttle valve fully opened)	1 → 2	58 – 64 km/h (36 – 40 mph)
	2 → 3	107 – 116 km/h (66 – 72 mph)
	3 → O/D	144 – 152 km/h (89 – 94 mph)
	O/D → 3	137 – 145 km/h (85 – 90 mph)
	3 → 2	98 – 108 km/h (61 – 67 mph)
	2 → 1	46 – 52 km/h (29 – 32 mph)
(Throttle valve fully closed)	3 → O/D	35 – 39 km/h (22 – 24 mph)
	O/D → 3	26 – 30 km/h (16 – 19 mph)
2 position		
(Throttle valve fully opened)	1 → 2	57 – 61 km/h (35 – 38 mph)
	3 → 2	114 – 121 km/h (71 – 75 mph)
	2 → 1	45 – 49 km/h (28 – 30 mph)
L position		
(Throttle valve fully opened)	3 → 2	97 – 105 km/h (60 – 65 mph)
	2 → 1	55 – 59 km/h (34 – 37 mph)
(3RZ–FE / A340F)	Tire size: 31 X 10.5R15	
D position		
(Throttle valve fully opened)	1 → 2	54 – 59 km/h (34 – 37 mph)
	2 → 3	99 – 108 km/h (62 – 67 mph)
	3 → O/D	132 – 140 km/h (82 – 87 mph)
	O/D → 3	126 – 134 km/h (78 – 83 mph)
	3 → 2	91 – 100 km/h (57 – 62 mph)
	2 → 1	43 – 48 km/h (27 – 30 mph)
(Throttle valve fully closed)	3 → O/D	32 – 36 km/h (20 – 22 mph)
	O/D → 3	24 – 28 km/h (15 – 17 mph)
2 position		
(Throttle valve fully opened)	1 → 2	54 – 59 km/h (34 – 37 mph)
	3 → 2	104 – 112 km/h (65 – 70 mph)
	2 → 1	43 – 48 km/h (27 – 30 mph)
L position		
(Throttle valve fully opened)	3 → 2	89 – 97 km/h (55 – 60 mph)
	2 → 1	50 – 55 km/h (31 – 34 mph)

(3RZ–FE / A340F)	Tire size: P225 / 75R15	
D position		
(Throttle valve fully opened)	1 → 2	56 – 61 km/h (35 – 38 mph)
	2 → 3	102 – 111 km/h (63 – 69 mph)
	3 → O/D	135 – 144 km/h (84 – 89 mph)
	O/D → 3	129 – 138 km/h (80 – 86 mph)
	3 → 2	94 – 103 km/h (58 – 64 mph)
	2 → 1	44 – 49 km/h (27 – 30 mph)
(Throttle valve fully closed)	3 → O/D	33 – 37 km/h (21 – 23 mph)
	O/D → 3	24 – 29 km/h (15 – 18 mph)
2 position		
(Throttle valve fully opened)	1 → 2	56 – 61 km/h (34 – 38 mph)
	3 → 2	107 – 116 km/h (66 – 72 mph)
	2 → 1	44 – 49 km/h (27 – 30 mph)
L position		
(Throttle valve fully opened)	3 → 2	91 – 100 km/h (57 – 62 mph)
	2 → 1	52 – 56 km/h (32 – 35 mph)
(5VZ–FE / A340E)	Tire size: 31 X 10.5R15	
D position		
(Throttle valve fully opened)	1 → 2	58 – 63 km/h (36 – 39 mph)
	2 → 3	109 – 117 km/h (68 – 73 mph)
	3 → O/D	147 – 156 km/h (91 – 97 mph)
	O/D → 3	140 – 149 km/h (87 – 93 mph)
	3 → 2	100 – 109 km/h (62 – 68 mph)
	2 → 1	46 – 50 km/h (29 – 31 mph)
(Throttle valve fully closed)	3 → O/D	42 – 47 km/h (26 – 29 mph)
	O/D → 3	22 – 27 km/h (14 – 18 mph)
2 position		
(Throttle valve fully opened)	1 → 2	58 – 63 km/h (36 – 39 mph)
	3 → 2	116 – 125 km/h (72 – 78 mph)
	2 → 1	46 – 50 km/h (29 – 31 mph)
L position		
(Throttle valve fully opened)	3 → 2	99 – 107 km/h (62 – 68 mph)
	2 → 1	56 – 61 km/h (35 – 38 mph)
(5VZ–FE / A340E)	Tire size: P225 / 75R15	
D position		
(Throttle valve fully opened)	1 → 2	56 – 61 km/h (35 – 38 mph)
	2 → 3	105 – 114 km/h (65 – 71 mph)
	3 → O/D	142 – 152 km/h (88 – 94 mph)
	O/D → 3	135 – 145 km/h (84 – 90 mph)
	3 → 2	97 – 106 km/h (60 – 66 mph)
	2 → 1	44 – 49 km/h (27 – 30 mph)
(Throttle valve fully closed)	3 → O/D	41 – 46 km/h (25 – 29 mph)
	O/D → 3	22 – 26 km/h (14 – 16 mph)
2 position		
(Throttle valve fully opened)	1 → 2	56 – 61 km/h (35 – 38 mph)
	3 → 2	112 – 121 km/h (70 – 75 mph)
	2 → 1	44 – 49 km/h (27 – 30 mph)
L position		
(Throttle valve fully opened)	2 → 1	95 – 105 km/h (59 – 65 mph)
	2 → 1	54 – 59 km/h (34 – 37 mph)

(5VZ–FE / A340F)	Tire size: 31 X 10.5R15	
D position		
(Throttle valve fully opened)	1 → 2	58 – 63 km/h (36 – 39 mph)
	2 → 3	109 – 117 km/h (68 – 73 mph)
	3 → O/D	147 – 156 km/h (91 – 97 mph)
	O/D → 3	140 – 149 km/h (87 – 93 mph)
	3 → 2	100 – 109 km/h (62 – 68 mph)
	2 → 1	46 – 50 km/h (29 – 31 mph)
(Throttle valve fully closed)	3 → O/D	42 – 47 km/h (26 – 29 mph)
	O/D → 3	22 – 27 km/h (14 – 18 mph)
2 position		
(Throttle valve fully opened)	1 → 2	58 – 63 km/h (36 – 39 mph)
	3 → 2	116 – 125 km/h (72 – 78 mph)
	2 → 1	46 – 50 km/h (29 – 31 mph)
L position		
(Throttle valve fully opened)	3 → 2	99 – 107 km/h (62 – 68 mph)
	2 → 1	56 – 61 km/h (35 – 38 mph)
(5VZ–FE / A340F)	Tire size: P225 / 75R15	
D position		
(Throttle valve fully opened)	1 → 2	56 – 61 km/h (35 – 38 mph)
	2 → 3	105 – 114 km/h (65 – 71 mph)
	3 → O/D	142 – 152 km/h (88 – 94 mph)
	O/D → 3	135 – 145 km/h (84 – 90 mph)
	3 → 2	97 – 106 km/h (60 – 66 mph)
	2 → 1	44 – 49 km/h (27 – 30 mph)
(Throttle valve fully closed)	3 → O/D	41 – 46 km/h (25 – 29 mph)
	O/D → 3	22 – 26 km/h (14 – 16 mph)
2 position		
(Throttle valve fully opened)	1 → 2	56 – 61 km/h (35 – 38 mph)
	3 → 2	112 – 121 km/h (70 – 75 mph)
	2 → 1	44 – 49 km/h (27 – 30 mph)
L position		
(Throttle valve fully opened)	2 → 1	95 – 105 km/h (59 – 65 mph)
	2 → 1	54 – 59 km/h (34 – 37 mph)

SS054–03

TORQUE SPECIFICATION

Part tightened		N·m	kgf·cm	ft·lbf
Transmission output lock nut		123	1,250	90
Drain plug		20	205	15
Engine mounting spacer x Transmission		28.5	291	21
Engine rear mounting insulator x Engine mounting spacer		65	660	48
Crossmember x Frame		72	734	53
Crossmember x Engine rear mounting		18.5	189	14
No.1 vehicle speed sensor x Transmission		16	160	12
No.2 vehicle speed sensor x Transmission		5.4	55	48 in.·lbf
ATF temperature sensor x Transmission		15	155	11
Oil cooler pipe union nut		34	350	25
Park/neutral start switch	Nut	6.9	70	61 in.·lbf
	Bolt	13	130	9
Shift solenoid valve x Valve body		10	100	7
Valve body x Transmission		10	100	7
Oil strainer x Valve body (A340E)		10	100	7
Oil strainer case x Valve body (A340F)		10	100	7
Oil strainer x Oil strainer case (A340F)		6.9	70	61 in.·lbf
Oil pan x Transmission		7.4	75	65 in.·lbf
Parking lock pawl bracket x Transmission		7.4	75	65 in.·lbf
Throttle cable retainer x Transmission		10	100	7
Engine under cover		29	296	21
Oil filler pipe x Transmission		12	120	9
Oil cooler pipe clamp		4.9	50	43 in.·lbf
Shift control rod x Shift control lever		13	130	10
Rear end plate x Transmission	3RZ–FE	37	380	27
	5VZ–FE	18	185	13
Torque converter clutch x Drive plate		41	420	30
Starter x Transmission		39	400	29
Transmission x Engine		71	730	53
Front differential rear mounting cushion x Member (A340F)	Nut	87	890	64
	Bolt	108	1,100	80
Drive plate x Engine	3RZ–FE	74	750	54
	5VZ–FE	83	850	61

BODY ELECTRICAL

SS04Y–01

SERVICE DATA

DAYTIME RUNNING LIGHT RELAY (Wire harness side)	
Tester connection	Specified condition
2 – Ground (Ignition switch position: LOCK or ACC)	No voltage
2 – Ground (Ignition switch position: ON or START)	Battery positive voltage
6 – Ground (Constant)	Battery positive voltage
11 – Ground (Engine stop)	No voltage
11 – Ground (Engine Running)	Battery positive voltage
15 – Ground (Constant)	Battery positive voltage
18 – Ground (Brake fluid level warning position ON)	Battery positive voltage
TURN SIGNAL FLASHER	
Flashes / Minute	60 – 120
SPEEDOMETER (USING A SPEEDOMETER TESTER)	
Standard indication (km/h)	Allowable range (km/h)
20	17 – 24
40	38 – 46
60	57.5 – 67
80	77 – 88
100	96 – 109
120	115 – 130
140	134 – 151.5
160	153 – 173
Standard indication (mph)	Allowable range (mph)
20	18 – 24
40	38 – 44
60	58 – 66
80	78 – 88
100	98 – 110
120	118 – 132
TACHOMETER (ON–VEHICLE)	DC 13.5 V 20˚C (68˚F)
Standard indication (rpm)	Allowable range (rpm)
700	610 – 750
3,000	2,850 – 3,150
5,000	4,850 – 5,150
7,000	6,790 – 7,210
FUEL RECEIVER GAUGE (w/ Tachometer)	
Between terminals	Resistance Ω
A – B	Approx. 140~158
A – C	Approx. 233~271
B – C	Approx. 92~114
FUEL RECEIVER GAUGE (w/o Tachometer)	
Between terminals	Resistance Ω
A – B	Approx. 115~130
A – C	Approx. 208~244

B – C	Approx. 92~114
FUEL SENDER GAUGE (68L)	
Float position: mm (in.)	Resistance Ω
F Approx. 28.0 (1.102)	Approx. 3.0
1/2 Approx. 81.3 (3.201)	Approx. 32.5
E Approx. 163.9 (6.453)	Approx. 110.0
FUEL SENDER GAUGE (57L)	
Float position: mm (in.)	Resistance Ω
F Approx. 12.1 (0.476)	Approx. 3.0
1/2 Approx. 79.0 (3.110)	Approx. 32.5
E Approx. 153.3 (6.035)	Approx. 110.0
ENGINE COOLANT TEMPERATURE GAUGE (w/ Tachometer)	
Between terminals	Resistance Ω
A–B	Approx. 85~95
A–C	Approx. 158~192
B–C	Approx. 215~255
ENGINE COOLANT TEMPERATURE GAUGE (w/o Tachometer)	
Between terminals	Resistance Ω
A–B	Approx. 85~95
A–C	Approx. 158~192
B–C	Approx. 215~255
DOOR LOCK CONTROL RELAY (Wire harness side)	
Tester connection	Specified condition
2 – Ground (Constant)	Battery positive voltage
8 – Ground (Ignition switch position: LOCK or ACC)	No voltage
8 – Ground (Ignition switch position: ON)	Battery positive voltage
13 – Ground (Key unlock warning switch position : OFF) (Ignition key removed)	No voltage
13 – Ground (Key unlock warning switch position : ON) (Ignition key set)	Battery positive voltage
ANTENNA MOTOR CONTROL RELAY (Wire harness side)	
Tester connection	Specified condition
2 – Ground (Constant)	Battery positive voltage
5 – Ground (Ignition switch position: LOCK or ACC)	No voltage
5 – Ground (Ignition switcch position: ON)	Battery positive voltage
6 – Ground (Ignition Switch position: LOCK)	No voltage
6 – Ground (Ignition Switch position: ACC or ON) (Radio switch and cassette OFF)	No voltage
6 – Ground (Ignition Switch position: ACC or ON) (Radio switch of cassette ON)	Battery positive voltage
8 – Ground (Ignition switch position: LOCK)	No voltage
8 – Ground (Ignition swith position: ACC or ON) (Radio switch OFF or cassette ON)	No voltage
8 – Ground (Ignition swith position: ACC or ON) (Radio switch ON and cassette OFF)	Battery positive voltage
9 – Ground (Ignition switch position: LOCK or ACC)	No voltage
9 – Ground (Ignition switch position: ON)	Battery positive voltage

BODY

TORQUE SPECIFICATION

SS05D–02

Part tightened		N·m	kgf·cm	ft·lbf
FRONT BUMPER		–	–	–
Front bumper arm x Body		58	590	43
Front bumper arm x Front valance panel		4.9	50	43 in.·lbf
Upper retainer x Front valance panel		4.9	50	43 in.·lbf
HOOD		–	–	–
Hood hinge x Hood		13	130	10
Hood hinge x Body		18	180	13
Hood lock x Body		8	82	71 in.·lbf
FRONT DOOR		–	–	–
Hinge set bolt		23	230	17
Door lock striker x Body		12	120	9
Window regulator x Body		4.9	50	43 in.·lbf
Outside handle x Front door		4.9	50	43 in.·lbf
WIPER AND WASHER		–	–	–
Wiper motor x Body		5.4	55	47 in.·lbf
Wiper link x Body		5.4	55	47 in.·lbf
Wiper arms x Wiper link		20	205	15
REMOVABLE ROOF		–	–	–
Removable roof hinge case x Body		3.4	35	30 in.·lbf
Removable roof lock base x Body		5.9	60	52 in.·lbf
Removable roof handle x Removable roof		2.9	30	26 in.·lbf
INSTRUMENT PANEL		–	–	–
Steering wheel set nut		35	375	26
Front passenger airbag assembly x Instrument panel		5.0	51	42 in.·lbf
Front passenger airbag assembly x Reinforcement		20	205	15
ONE TOUCH TAIL GATE		–	–	–
Tail gate cable x Tail gate		14	140	10
Tail gate lock striker x Body		12	120	9
Tail gate hinge x Body	A bolt:	30	310	22
	B bolt:	24	240	17
	C bolt:	28	290	19
SEAT		–	–	–
Front Seat		–	–	–
Seat adjuster x Body		37	375	27
Rear Jump Seat	Extra Cab:	–	–	–
Back panel trim x Body		9.8	100	7
Seat cushion x Body		9.8	100	7

Part tightened		N·m	kgf·cm	ft·lbf
SEAT BELT		–	–	–
Front Seat Belt		–	–	–
Shoulder belt anchor adjuster x Body		43	440	32
Shoulder belt anchor adjuster x Front seat outer belt shoulder anchor		43	440	32
Front seat outer belt shoulder anchor x Body		43	440	32
Front seat inner belt x Body		43	440	32
Front lower arm x Front seat inner belt		43	440	32
Front seat outer belt retractor x Body	Upper bolt	43	440	32
	Lower bolt	4.9	50	43 in.·lbf
Center belt x Body	Split bench seat:	43	440	32
Rear Seat Belt		–	–	–
Rear seat outer belt shoulder anchor x Body		43	440	32
Rear seat outer belt floor anchor x Body		43	440	32
Rear seat outer belt retractor x Body		43	440	32
Rear seat inner belt x Body		43	440	32

BRAKE

SERVICE DATA

SS057–04

Brake pedal height (from asphalt seat)		154.6 – 164.6 mm (6.087 – 6.480 in.)
Brake pedal freeplay		3 – 6 mm (0.12 – 0.24 in.)
Brake pedal reserve distance at 490 N (50 kgf, 110.2 lbf)		More than 72 mm (2.83 in.)
Brake booster push rod to piston clearance (w/ SST)		0 mm (0 in.)
Front brake pad thickness		
2WD	STD	12.0 mm (0.472 in.)
4WD, pre runner	STD	11.5 mm (0.453 in.)
	Minimum	1.0 mm (0.039 in.)
Disc thickness	STD	22.0 mm (0.866 in.)
	Minimum	20.0 mm (0.787 in.)
Disc runout	Maximum	0.07 mm (0.0028 in.)
Rear brake drum inside diameter		
2WD	STD	254.0 mm (10.000 in.)
	Maximum	256.0 mm (10.079 in.)
4WD, pre runner	STD	295.0 mm (11.614 in.)
	Maximum	297.0 mm (11.693 in.)
Rear brake shoe lining thickness		
2WD	STD	5.5 mm (0.217 in.)
4WD, pre runner	STD	6.0 mm (0.236 in.)
	Minimum	1.0 mm (0.039 in.)
Rear brake drum to shoe clearance		0.6 mm (0.024 in.)
Parking brake lever travel at 196 N (20 kgf, 44.1 lbf)		12 – 18 clicks

SS058–04

TORQUE SPECIFICATION

Part tightened		N·m	kgf·cm	ft·lbf
Master cylinder x Piston stopper bolt	w/o ABS	8.0	80	69 in.·lbf
	w/ ABS	10	100	7
Master cylinder x Reservoir	w/o ABS	1.5	15	13 in.·lbf
	w/ ABS	1.7	18	16 in.·lbf
Master cylinder x Brake booster		13	130	9
Brake line union nut		15	155	11
Brake booster clevis lock nut		25	260	19
Brake booster x Pedal bracket		13	130	9
Bleeder plug		11	110	8
Front disc brake caliper x Torque plate	2WD	88	900	65
Front disc brake caliper x Steering knuckle	4WD, pre runner	123	1,250	90
Front disc brake torque plate x Steering knuckle	2WD	108	1,100	80
Front disc x Front axle hub	2WD	64	650	47
Front disc brake caliper x Flexible hose		30	310	22
Rear drum brake wheel cylinder x Baking plate		10	100	7
Parking brake bellcrank bracket x Backing plate		13	130	9
LSP & BV x LSP & BV bracket		13	130	9
LSP & BV bracket x Load sensing spring assembly		18	185	13
Load sensing spring assembly x Shackle No. 1		18	185	13
Shackle No. 1 x Shackle No. 2		24	250	18
Shackle No. 2 x Shackle bracket		13	130	9
LSP & BV bracket x Frame		29	300	22
Shackle bracket x Rear axle housing		29	300	22
ABS actuator bracket x ABS actuator		9.0	92	7
ABS actuator x ECU		1.8	18.4	16 in.·lbf
ABS actuator bracket x Body		19	195	14
Speed sensor installation bolt		8.0	82	71 in.·lbf
Front speed sensor harness x Upper arm		8.0	82	71 in.·lbf
Front speed sensor harness x Side rail		13	130	9
Rear speed sensor harness x Axle housing		13	130	9
Rear speed sensor harness x Fuel tank		13	130	9
Rear speed sensor harness x Side rail		13	130	9

CHARGING (5VZ–FE)

SS01A–01

SERVICE DATA

Battery	Voltage	at 20˚C (68˚F)	12.7 – 12.9 V
Drive belt	Tension	New belt	160 ± 20 lbf
		Used belt	100 ± 20 lbf
Generator	Rated output ampere		12 V 60 A
	Rotor coil resistance	at 20˚C (68˚F)	2.1 – 2.5 Ω
	Slip ring diameter	STD	14.2 – 14.4 mm (0.559 – 0.567 in.)
		Minimum	12.8 mm (0.504 in.)
	Brush exposed length	STD	10.5 mm (0.413 in.)
		Minimum	1.5 mm (0.059 in.)
Generator regulator	Regulating voltage	at 25˚C (77˚F)	13.7 – 14.7 V
		at 115˚C (239˚F)	13.2 – 14.0 V

SS01F–01

TORQUE SPECIFICATION

Part tightened	N·m	kgf·cm	ft·lbf
Generator x Generator bracket	51	520	38
Generator x Adjusting lever	18.5	189	25
Rectifier end frame x Drive end frame	4.5	45	39 in.·lbf
Generator pulley x Rotor	110	1,125	81
Drive end frame x Voltage regulator	2.0	20	17 in.·lbf
Generator rear end cover x Rectifier end frame	4.5	45	39 in.·lbf
Terminal insulator x Rectifier Holder	4.1	42	36 in.·lbf

CLUTCH

SERVICE DATA

SS05B–01

Pedal height from floor panel		170.0–180.0 mm (6.692–7.086 in.)
Pedal height from asphalt sheet		167.0–177.0 mm (6.574–6.986 in.)
Pedal freeplay		5.0–15.0 mm (0.197–0.591 in.)
Push rod play at pedal top		1.0–5.0 mm (0.039–0.197 in.)
Clutch release point from pedal full stroke end position		25 mm (0.98 in.) or more
Clutch start switch	ON–OFF Stroke	8±0.5 mm (0.31±0.020 in.)
Slotted spring pin protrusion		1.5–3.5 mm (0.059–0.138 in.)
Disc rivet head depth	Min.	0.3 mm (0.012 in.)
Disc runout	Max.	0.8 mm (0.031 in.)
Flywheel runout	Max.	0.1 mm (0.004 in.)
Diaphragm spring finger wear	Max. depth	0.6 mm (0.024 in.)
Diaphragm spring finger wear	Max. width	5.0 mm (0.197 in.)
Diaphragm spring tip non–alignment	Max.	0.5 mm (0.020 in.)

SS05C–01

TORQUE SPECIFICATION

Part tightened		N·m	kgf·cm	ft·lbf
Clutch line union		15	155	11
Master cylinder installation nut		13	130	9
Bleeder plug		11	110	8
Release cylinder installation bolt		13	130	9
Clutch cover x Flywheel		19	195	14
Release fork support	2RZ–FE, 3RZ–FE	39	400	29
	5VZ–FE	47	480	35
Flywheel set bolt	2RZ–FE	88	900	65
	3RZ–FE	26.5	270	19
	5VZ–FE	85	850	63

COOLING (5VZ–FE)

SS00Y–01

SERVICE DATA

Thermostat	Valve opening pressure		80 – 84°C (176 – 183°F)
	Valve lift	at 95°C (203°F)	8.5 mm (0.335 in .) or more
Radiator cap	Relief valve opening pressure	STD	74 – 103 kPa (0.75 – 1.05 kgf/cm^2, 10.7 – 14.9 psi)
		Minimum	59 kPa (0.6 kgf/cm^2, 8.8 psi)

SS00Z–01

TORQUE SPECIFICATION

Part tightened	N·m	kgf·cm	ft·lbf
Fan x Fluid coupling	7.4	75	65 in.·lbf
Water pump x Cylinder block	20	200	14
Water inlet x Water pump	20	200	14
Radiator support x Body	12	120	9
Radiator support x Radiator	12.7	130	9

EMISSION CONTROL (5VZ–FE)

TORQUE SPECIFICATION

SS00R–06

Part tightened	N·m	kgf·cm	ft·lbf
Charcoal canister x Body	31	316	23
Front exhaust pipe x Exhaust crossover pipe (4WD Except California Spec.)	62	630	46
No.1 exhaust pipe with TWC x Exhaust crossover pipe (2WD, 4WD California Spec.)	62	630	46
TWC x Front exhaust pipe (4WD Except California Spec.)	48	490	35
No.1 exhaust pipe with TWC x No.2 exhaust pipe with TWC (2WD, 4WD California Spec.)	48	490	35
TWC x Tail pipe (4WD Except California Spec.)	48	490	35
No.2 exhaust pipe with TWC x Tail pipe (2WD, 4WD California Spec.)	48	490	35
Support bracket x Transmission, Front exhaust pipe	44	450	33

ENGINE MECHANICAL (5VZ–FE)

SS00O–01

SERVICE DATA

Compression pressure		at 250 rpm STD	1,200 kPa (12.2 kgf/cm^2, 174 psi) or more
		Minimum	1,000 kPa (10.2 kgf/cm^2, 145 psi)
	Difference of pressure between each cylinder		100 kPa (1.0 kgf/cm^2, 15 psi) or less
Valve clearance		at cold Intake	0.13 – 0.23 mm (0.006 – 0.009 in.)
		Exhaust	0.27 – 0.37 mm (0.011 – 0.014 in.)
	Adjusting shim for repair part	Mark 2.500	2.500 mm (0.0984 in.)
		Mark 2.550	2.550 mm (0.1004 in.)
		Mark 2.600	2.600 mm (0.1024 in.)
		Mark 2.650	2.650 mm (0.1043 in.)
		Mark 2.700	2.700 mm (0.1063 in.)
		Mark 2.750	2.750 mm (0.1083 in.)
		Mark 2.800	2.800 mm (0.1102 in.)
		Mark 2.850	2.850 mm (0.1122 in.)
		Mark 2.900	2.900 mm (0.1142 in.)
		Mark 2.950	2.950 mm (0.1161 in.)
		Mark 3.000	3.000 mm (0.1181 in.)
		Mark 3.050	3.050 mm (0.1201 in.)
		Mark 3.100	3.100 mm (0.1220 in.)
		Mark 3.150	3.150 mm (0.1240 in.)
		Mark 3.200	3.200 mm (0.1260 in.)
		Mark 3.250	3.250 mm (0.1280 in.)
		Mark 3.300	3.300 mm (0.1299 in.)
Ignition timing	w/ Terminals TE1 and E1 connected of DLC1		8 – 12° BTDC @ idle
Idle speed	–		700 ± 50 rpm
Intake manifold vacuum		at idle speed	60 kPa (450 mmHg, 17.7 in.Hg) or more
Timing belt tensioner	Protrusion from housing side		10.0 – 10.8 mm (0.394 – 0.425 in.)
Cylinder head	Warpage	Maximum	0.10 mm (0.039 in.)
	Valve seat		
	Refacing angle		30°, 45°, 60°
	Contacting angle		45°
	Contacting width		1.0 – 1.4 mm (0.039 – 0.055 in.)
	Valve guide bushing bore diameter	STD	10.985 – 11.027 mm (0.4325 – 0.4341 in.)
		O/S 0.05	11.050 – 11.077 mm (0.4350 – 0.4361 in.)
Valve guide bushing	Inside diameter		6.010 – 6.030 mm (0.2366 – 0.2374 in.)
	Outside diameter for repair part	STD	11.033 – 11.044 mm (0.4344 – 0.4348 in.)
		O/S 0.05	11.083 – 11.094 mm (0.4363 – 0.4368 in.)
Valve	Valve overall length	STD Intake	95.15 mm (3.7461 in.)
		Exhaust	94.90 mm (3.7362 in.)
		Minimum Intake	94.60 mm (3.7244 in.)
		Exhaust	94.40 mm (3.7165 in.)
	Valve face angle		44.5°
	Stem diameter	Intake	5.970 – 5.985 mm (0.2350 – 0.2356 in.)
		Exhaust	5.965 – 5.980 mm (0.2348 – 0.2354 in.)
	Stem oil clearance	STD Intake	0.025 – 0.060 mm (0.0010 – 0.0024 in.)
		Exhaust	0.030 – 0.065 mm (0.0012 – 0.0026 in.)
		Maximum Intake	0.08 mm (0.0031 in.)
		Exhaust	0.10 mm (0.0039 in.)
	Margin thickness	STD	1.0 mm (0.039 in.)
		Minimum	0.5 mm (0.020 in.)

Valve spring	Deviation	Maximum	2.0 mm (0.079 in.)
	Free length		44.78 mm (1.7630 in.)
	Installed tension	at 33.3 mm (1.311 in.)	186 – 206 N (19.0 – 21.0 kgf, 41.9 – 46.3 lbf)
Valve lifter	Lifter diameter		30.966 – 30.976 mm (1.2191 – 2.2195 in.)
	Lifter bore diameter		31.000 – 31.018 mm (1.2205 – 1.2212 in.)
	Oil clearance	STD	0.024 – 0.052 mm (0.0009 – 0.0020 in.)
		Maximum	0.08 mm (0.0031 in.)
Camshaft	Thrust clearance	STD	0.033 – 0.080 mm (0.0013 – 0.0031 in.)
		Maximum	0.12 mm (0.0047 in.)
	Journal oil clearance	STD	0.035 – 0.072 mm (0.0014 – 0.0028 in.)
		Maximum	0.10 mm (0.0039 in.)
	Journal diameter		26.949 – 26.965 mm (1.0610 – 1.0616 in.)
	Circle runout	Maximum	0.06 mm (0.0024 in.)
	Cam lobe height	STD Intake	42.31 – 42.41 mm (1.6657 – 1.6697 in.)
		Exhaust	41.96 – 42.06 mm (1.6520 – 1.6559 in.)
		Minimum Intake	42.16 mm (1.6598 in.)
		Exhaust	41.81 mm (1.6461 in.)
	Camshaft gear backlash	STD	0.020 – 0.200 mm (0.0008 – 0.0079 in.)
		Maximum	0.30 mm (0.0188 in.)
	Camshaft gear spring end free distance		18.2 – 18.8 mm (0.712 – 0.740 in.)
Air intake chamber	Warpage	Maximum	0.10 mm (0.0039 in.)
Intake air connector	Warpage	Maximum	0.10 mm (0.0039 in.)
Intake manifold	Warpage	Maximum	0.10 mm (0.0039 in.)
Exhaust manifold	Warpage	Maximum	1.00 mm (0.0394 in.)
Cylinder block	Cylinder head surface warpage	Maximum	0.05 mm (0.0020 in.)
	Cylinder bore diameter	STD Mark 1	93.500 – 93.510 mm (3.6811 – 3.6815 in.)
		Mark 2	93.510 – 93.520 mm (3.6815 – 3.6819 in.)
		Mark 3	93.520 – 93.530 mm (3.6819 – 3.6823 in.)
		Maximum STD	93.730 mm (3.6902 in.)
		O/S 0.50	94.230 mm (3.7098 in.)
Piston and piston ring	Piston diameter	STD Mark 1	93.356 – 93.366 mm (3.6754 – 3.6758 in.)
		Mark 2	93.367 – 93.376 mm (3.6759 – 3.6762 in.)
		Mark 3	93.377 – 93.386 mm (3.6763 – 3.6766 in.)
		O/S 0.50	93.856 – 93.886 mm (3.6951 – 3.6963 in.)
	Piston oil clearance	STD	0.134 – 0.154 mm (0.0053 – 0.0060 in.)
		Maximum	0.174 mm (0.0069 in.)
	Piston ring groove clearance	No.1	0.040 – 0.080 mm (0.0016 – 0.0031 in.)
		No.2	0.030 – 0.070 mm (0.0012 – 0.0028 in.)
	Piston ring end gap	STD No.1	0.300 – 0.500 mm (0.0118 – 0.0197 in.)
		No.2	0.400 – 0.600 mm (0.0157 – 0.0236 in.)
		Oil	0.150 – 0.550 mm (0.0059 – 0.0217 in.)
		Maximum No.1	1.100 mm (0.0433 in.)
		No.2	1.200 mm (0.0472 in.)
		Oil	1.150 mm (0.0453 in.)

Connecting rod	Thrust clearance	STD	0.150 – 0.330 mm (0.0059 – 0.0130 in.)
		Maximum	0.380 mm (0.0150 in.)
	Connecting rod bearing center wall thickness		
	Reference	Mark 1	1.484 – 1.488 mm (0.0584 – 0.0586 in.)
		Mark 2	1.488 – 1.492 mm (0.0586 – 0.0587 in.)
		Mark 3	1.492 – 1.496 mm (0.0587 – 0.0589 in.)
	Connecting rod oil clearance	STD	0.024 – 0.053 mm (0.0009 – 0.0021 in.)
		O/S 0.25	0.023 – 0.069 mm (0.0009 – 0.0027 in.)
		Maximum	0.08 mm (0.0031 in.)
	Rod bend	Maximum per 100 mm (3.94 in.)	0.05 mm (0.0020 in.)
	Rod twist	Maximum per 100 mm (3.94 in.)	0.15 mm (0.0059 in.)
	Bushing inside diameter		22.005 – 22.017 mm (0.8663 – 0.8668 in.)
	Piston pin diameter		21.997 – 22.009 mm (0.8660 – 0.8665 in.)
	Bushing oil clearance	STD	0.005 – 0.011 mm (0.0002 – 0.0004 in)
		Maximum	0.05 mm (0.0020 in.)
	Connecting rod bolt outer diameter	STD	7.860 – 8.000 mm (0.3094 – 0.3150 in.)
		Minimum	7.600 mm (0.2992 in.)
Crankshaft	Thrust clearance	STD	0.020 – 0.220 mm (0.0008 – 0.0087 in.)
		Maximum	0.300 mm (0.0118 in.)
	Thrust washer thickness		2.440 – 2.490 mm (0.0961 – 0.0980 in.)
	Main journal oil clearance	No.1 STD	0.020 – 0.038 mm (0.0008 – 0.0015 in.)
		U/S 0.25	0.019 – 0.059 mm (0.0007 – 0.0023 in.)
		Others STD	0.024 – 0.042 mm (0.0009 – 0.0017 in.)
		U/S 0.25	0.023 – 0.063 mm (0.0009 – 0.0025 in.)
		Maximum	0.08 mm (0.0031 in.)
	Main journal diameter	STD	63.985 – 64.000 mm (2.5191 – 2.5197 in.)
		U/S 0.25	63.745 – 63.755 mm (2.5096 – 2.5100 in.)
	Main bearing center wall thickness		
	Reference	No.1 Mark 1	1.991 – 1.994 mm (0.0784 – 0.0785 in.)
		Mark 2	1.994 – 1.997 mm (0.0785 – 0.0786 in.)
		Mark 3	1.997 – 2.000 mm (0.0786 – 0.0787 in.)
		Mark 4	2.000 – 2.003 mm (0.0787 – 0.0789 in.)
		Mark 5	2.003 – 2.006 mm (0.0789 – 0.0790 in.)
		Others Mark 1	1.989 – 1.992 mm (0.0783 – 0.0784 in.)
		Mark 2	1.992 – 1.995 mm (0.0784 – 0.0785 in.)
		Mark 3	1.995 – 1.998 mm (0.0785 – 0.0787 in.)
		Mark 4	1.998 – 2.001 mm (0.0787 – 0.0788 in.)
		Mark 5	2.001 – 2.004 mm (0.0788 – 0.0789 in.)
	Crank pin diameter	STD	54.987 – 55.000 mm (2.1648 – 2.1654 in.)
		U/S 0.25	54.745 – 54.755 mm (2.1553 – 2.1557 in.)
	Circle runout	Maximum	0.06 mm (0.0024 in.)
	Main journal taper and out–of–round	Maximum	0.02 mm (0.0008 in.)
	Crank pin taper and out–of–round	Maximum	0.02 mm (0.0008 in.)

SS00P–06

TORQUE SPECIFICATION

Part tightened		N·m	kgf·cm	ft·lbf
No.1 idler pulley x Oil pump		35	350	26
No.2 idler pulley x No.2 idler pulley bracket		40	400	30
No.1 timing belt cover x Oil pump		9	90	80 in.·lbf
Crankshaft pulley x Crankshaft		250	2,500	184
Camshaft timing pulley x Camshaft		110	1,100	81
Timing belt tensioner x Oil pump		27	280	20
No.2 timing belt cover x No.3 timing belt cover		9	90	80 in.·lbf
Oil dipstick guide x Generator bracket		8	80	71 in.·lbf
Fluid coupling x Fan bracket		5.4	54	48 in.·lbf
A/C compressor bracket x Cylinder block		47	479	35
A/C compressor x A/C compressor bracket		25	250	18
PS pump x PS pump bracket		43	440	31
Camshaft bearing cap x Cylinder head		16	160	12
Rear plate x Cylinder head		8	80	71 in.·lbf
Cylinder head x Cylinder block	12 pointed head 1st 2nd 3rd Recessed head	34 Turn 90° Turn 90° 18	350 Turn 90° Turn 90° 185	25 Turn 90° Turn 90° 13
Cylinder head cover x Cylinder head		6	60	53 in.·lbf
Exhaust manifold x Cylinder head		40	400	30
Exhaust manifold heat insulator x Exhaust manifold		8	80	71 in.·lbf
Exhaust crossover pipe x Exhaust manifold		45	450	33
Generator bracket x LH cylinder head		18.5	185	14
PS pump bracket x RH cylinder head		18.5	185	14
Intake manifold, Intake manifold stay x Cylinder head		18	180	13
No.3 timing belt cover x Cylinder head		9	90	80 in.·lbf
Camshaft position sensor x RH cylinder head		8	80	71 in.·lbf
Intake air connector x Intake manifold		18	180	13
Air intake chamber x Intake air connector		18	180	13
Air intake chamber stay x LH cylinder head, Air intake chamber		40	400	30
Engine hanger No.2 x RH cylinder head		40	400	30
Frame crossmember x Engine rear mounting bracket		58	590	43
Engine rear mounting bracket x Engine rear mounting insulator		18	183	13
Engine front mounting insulator x Frame		38	387	28
Connecting rod cap x Connecting rod	1st 2nd	25 Turn 90°	250 Turn 90°	18 Turn 90°
Main bearing cap x Cylinder block	1st 2nd	61 Turn 90°	625 Turn 90°	45 Turn 90°
Rear oil seal retainer x Cylinder block		8	80	71 in.·lbf
Engine coolant drain cock x Cylinder block		39	400	29
Engine mounting bracket x Cylinder block		44	440	32
Oil filter union x Cylinder block		25	250	18
Oil pressure switch x Cylinder block		15	150	11
Generator adjusting bar x Cylinder block		42	420	31

No.2 idler pulley bracket x Cylinder block	38	380	28
Water bypass pipe x Cylinder block	8.5	85	75 in.·lbf
Rear end plate x Cylinder block	7.5	75	66 in.·lbf
Drive plate x Crankshaft	83	850	61
Flywheel x Crankshaft	85	850	63
Front exhaust pipe x Crossover pipe (4WD Except California Spec.)	62	630	46
No.1 exhaust pipe with TWC x Crossover pipe (2WD, 4WD California Spec.)	62	630	46
TWC x Front exhaust pipe (4WD Except California Spec.)	48	490	35
No.1 exhaust pipe with TWC x No.2 exhaust pipe with TWC (2WD, 4WD California Spec.)	48	490	35
TWC x Tail pipe (4WD Except California Spec.)	48	490	35
No.2 exhaust pipe with TWC x Tail pipe (2WD, 4WD California Spec.)	48	490	35
Heated oxygen sensor (bank 1 sensor 1) x Front exhaust pipe (4WD Except California Spec.)	20	200	14
A/F sensor (bank 1 sensor 1) x No.1 exhaust pipe with TWC (2WD, 4WD California Spec.)	20	200	14
Heated oxygen sensor (bank 1 sensor 2) x Tail pipe	20	200	14

IGNITION (5VZ–FE)

SS016–01

SERVICE DATA

High–tension cord	Resistance	Maximum	25 kΩ per cord
Spark plug	Recommended spark plug	ND	K16TR11
		NGK	BKR5EKB–11
	Correct electrode gap		1.1 mm (0.043 in.)
Ignition coil	Resistance	Primary at cold	0.67 – 1.05 Ω
		at hot	0.85 – 1.23 Ω
		Secondary at cold	9.3 –16.0 kΩ
		at hot	11.7 – 18.8 kΩ
Camshaft position sensor	Resistance	at cold	835 – 1,400 Ω
		at hot	1,060 – 1,645 Ω
Crankshaft position sensor	Resistance	at cold	1,630 – 2,740 Ω
		at hot	2,065 – 3,225 Ω

SS017–01

TORQUE SPECIFICATION

Part tightened	N·m	kgf·cm	ft·lbf
Spark plug x Cylinder head	18	180	13
Ignition coil x Cylinder head	7.8	80	69 in.·lbf
Camshaft position sensor x Cylinder head	7.8	80	69 in.·lbf
Crankshaft position sensor x Oil pump	7.8	80	69 in.·lbf

LUBRICATION (5VZ–FE)

SS012–01

SERVICE DATA

Oil pressure	At idle speed (normal operating temperature)		29 kPa (0.3 kgf/cm^2, 4.3 psi) or more
	At 3,000 rpm (normal operating temperature)		245 – 520 kPa (2.5 – 5.3 kgf/cm^2, 36 – 75 psi)
Oil pump	Body clearance	STD	0.10 – 0.18 mm (0.0039 – 0.0069 in.)
		Maximum	0.30 mm (0.0118 in.)
	Tip clearance	STD	0.11 – 0.24 mm (0.0043 – 0.0094 in.)
		Maximum	0.35 mm (0.0138 in.)
	Side clearance	STD	0.03 – 0.09 mm (0.0012 – 0.0035 in.)
		Maximum	0.15 mm (0.0059 in.)

SS013–01

TORQUE SPECIFICATION

Part tightened		N·m	kgf·cm	ft·lbf
Oil pressure switch x Cylinder block		15	150	11
Oil pump x Oil pump body cover		10	105	8
Oil pump x Cylinder block	A	20	200	15
	B	42	420	31
Oil strainer x Cylinder block		7.5	76	66 in.·lbf
Oil pan x Cylinder block		7.6	78	67 in.·lbf
Oil cooler x Cylinder block		59	600	43

MAINTENANCE

TORQUE SPECIFICATION

SS00L–01

Part tightened	N·m	kgf·cm	ft·lbf
Front seat mount bolts	37	375	27

PROPELLER SHAFT

SS05K–02

SERVICE DATA

Propeller shaft runout		Max.	0.8 mm (0.031 in.)
Spider bearing axial play		Max.	0.05 mm (0.0020 in.)
Spider bearing selection		Mark	
Bearing cup outer diameter		None	29.008 – 29.021 mm (1.1420 – 1.1426 in.)
		Red	29.028 – 29.041 mm (1.1428 – 1.1433 in.)
Bearing hole inner diameter		None	29.000 – 29.020 mm (1.1417 – 1.1425 in.)
		Drill	29.021 – 29.042 mm (1.1426 – 1.1434 in.)
Snap ring thickness			
TMC made	Mark	Color	
	1	–	2.100 – 2.150 mm (0.0827 – 0.0846 in.)
	2	–	2.150 – 2.200 mm (0.0846 – 0.0866 in.)
	3	–	2.200 – 2.250 mm (0.0866 – 0.0886 in.)
	–	Brown	2.250 – 2.300 mm (0.0886 – 0.0906 in.)
	–	Blue	2.300 – 2.350 mm (0.0906 – 0.0925 in.)
	6	–	2.350 – 2.400 mm (0.0925 – 0.0945 in.)
	7	–	2.400 – 2.450 mm (0.0945 – 0.0965 in.)
	8	–	2.450 – 2.500 mm (0.0965 – 0.0984 in.)
DANA made		Color	
		Green	1.384 mm (0.0545 in.)
		Red	1.435 mm (0.0565 in.)
		Black	1.486 mm (0.0585 in.)
		Copper	1.511 mm (0.0595 in.)
		Silver	1.537 mm (0.0605 in.)
		Yellow	1.588 mm (0.0625 in.)
		Blue	1.638 mm (0.0645 in.)

SS05L–02

TORQUE SPECIFICATION

Part tightened		N·m	kgf·cm	ft·lbf
Front differential x Front propeller shaft	4WD	74	750	54
Front propeller shaft x Transfer	4WD	74	750	54
Propeller shaft x Rear differential	4WD and pre runner	74	750	54
Propeller shaft x Transmission (pre runner) / transfer (4WD)		74	750	54
Intermediate shaft x Propeller shaft	4WD and pre runner	74	750	54
Propeller shaft x Differential	2WD	74	750	54
Intermediate shaft x Propeller shaft	2WD	74	750	54
Center support bearing x Frame crossmember	3–joint type	36	370	27
Intermediate shaft x Center bearing x Joint flange	3–joint type			
	1st	181	1,850	134
	2nd	Loosen nut		
	3rd	69	700	51

SFI (5VZ–FE)

SERVICE DATA

SS00U–06

Fuel pressure regulator	Fuel pressure	at no vacuum	265 – 304 kPa (2.7 – 3.1 kgf/cm^2, 38 – 44 psi)
Fuel pump	Resistance	at 20°C (68°F)	0.2 – 3.0 Ω
Injector	Resistance Injection volume Difference between each cylinder Fuel leakage		Approx. 13.8 Ω 56 – 69 cm^3 (3.4 – 4.2 cu in.) per 15 sec. 1.3 cm^3 (0.08 cu in.) or less 1 drop or less per 12 minutes
MAF meter	Resistance (THA – E2)	at –20°C (–4°F) at 20°C (68°F) at 60°C (140°F)	13.6 – 18.4 kΩ 2.2 – 2.7 kΩ 0.5 – 0.7 kΩ
Throttle body	Throttle valve fully closed angle DP setting speed (M/T) Throttle opener setting speed		10° 1,800 – 2,200 rpm 900 – 1,950 rpm
Throttle position sensor	Clearance between stop screw and lever 0 mm (0 in.) Throttle valve fully open 	 VTA – E2 VTA – E2 VC – E2	 0.28 – 6.4 kΩ 2.0 – 11.6 kΩ 2.7 – 7.7 kΩ
IAC valve	Resistance (+B – RSO or RSC)	at cold at hot	17.0 – 24.5 Ω 21.5 – 28.5 Ω
VSV for EVAP	Resistance	at 20°C (68°F)	30 – 34 Ω
VSV for vapor pressure sensor	Resistance	at 20°C (68°F)	37 – 44 Ω
ECT sensor	Resistance	at –20°C (–4°F) at 0°C (32°F) at 20°C (68°F) at 40°C (104°F) at 60°C (140°F) at 80°C (176°F)	10 – 20 kΩ 4 – 7 kΩ 2 – 3 kΩ 0.9 – 1.3 kΩ 0.4 – 0.7 kΩ 0.2 – 0.4 kΩ
Heated oxygen sensor	Heater resistance	at 20°C (68°F)	11 – 16 Ω
Vapor pressure sensor	Voltage(VC – E2)		4.5 – 5.5 V
Fuel cut rpm	Fuel return rpm	M/T A/T	1,000 rpm 1,200 rpm

SS00V–05

TORQUE SPECIFICATION

Part tightened	N·m	kgf·cm	ft·lbf
Fuel line (Union bolt type)	34.3	350	25
Fuel line (Flare nut type) using SST	28	285	21
Fuel inlet pipe x Intake manifold	8	80	71 in.·lbf
Fuel pressure regulator x LH delivery pipe	8	80	71 in.·lbf
Delivery pipe x Intake manifold	13	130	10
Fuel pump bracket assembly x Fuel tank	3.5	35	30 in.·lbf
Fuel pipe x Body	20	200	14
Fuel tank band x Body	40	410	30
Fuel tank protector x Fuel tank, Body	30	310	22
Fuel tube clamp bracket x Fuel tank	5.5	55	48 in.·lbf
Fuel tank filler pipe x Fuel tank	3	30	27 in.·lbf
Fuel evaporation vent tube x Fuel tank	1.5	15	13 in.·lbf
Fuel pressure regulator x LH delivery pipe	8	80	71 in.·lbf
MAF meter x Air cleaner cap	6.9	72	61 in.·lbf
Throttle body x Air intake chamber	18	180	13
ECT sensor x Intake manifold	20	200	14
Knock sensor x Cylinder block	39	400	29
A/F sensor (Bank 1 sensor 1) x No.1 exhaust pipe with TWC (California Spec.)	20	200	14
Heated oxygen sensor (Bank 1 sensor 1) x Front exhaust pipe (Except California Spec.)	20	200	14
Heated oxygen sensor (Bank 1 sensor 2) x Tail pipe	20	200	14

SS0ZT–01

SPECIFIED TORQUE FOR STANDARD BOLTS

Class	Diameter mm	Pitch mm	Specified torque					
			Hexagon head bolt			Hexagon flange bolt		
			N·m	kgf·cm	ft·lbf	N·m	kgf·cm	ft·lbf
4T	6	1	5	55	48 in.·lbf	6	60	52 in.·lbf
	8	1.25	12.5	130	9	14	145	10
	10	1.25	26	260	19	29	290	21
	12	1.25	47	480	35	53	540	39
	14	1.5	74	760	55	84	850	61
	16	1.5	115	1,150	83	–	–	–
5T	6	1	6.5	65	56 in.·lbf	7.5	75	65 in.·lbf
	8	1.25	15.5	160	12	17.5	175	13
	10	1.25	32	330	24	36	360	26
	12	1.25	59	600	43	65	670	48
	14	1.5	91	930	67	100	1,050	76
	16	1.5	140	1,400	101	–	–	–
6T	6	1	8	80	69 in.·lbf	9	90	78 in.·lbf
	8	1.25	19	195	14	21	210	15
	10	1.25	39	400	29	44	440	32
	12	1.25	71	730	53	80	810	59
	14	1.5	110	1,100	80	125	1,250	90
	16	1.5	170	1,750	127	–	–	–
7T	6	1	10.5	110	8	12	120	9
	8	1.25	25	260	19	28	290	21
	10	1.25	52	530	38	58	590	43
	12	1.25	95	970	70	105	1,050	76
	14	1.5	145	1,500	108	165	1,700	123
	16	1.5	230	2,300	166	–	–	–
8T	8	1.25	29	300	22	33	330	24
	10	1.25	61	620	45	68	690	50
	12	1.25	110	1,100	80	120	1,250	90
9T	8	1.25	34	340	25	37	380	27
	10	1.25	70	710	51	78	790	57
	12	1.25	125	1,300	94	140	1,450	105
10T	8	1.25	38	390	28	42	430	31
	10	1.25	78	800	58	88	890	64
	12	1.25	140	1,450	105	155	1,600	116
11T	8	1.25	42	430	31	47	480	35
	10	1.25	87	890	64	97	990	72
	12	1.25	155	1,600	116	175	1,800	130

SUPPLEMENTAL RESTRAINT SYSTEM

SS01W–05

TORQUE SPECIFICATION

Part tightened		N·m	kgf·cm	ft·lbf
Steering wheel		35	360	26
Steering wheel pad		9.0	90	78 in.·lbf
Front passenger airbag assembly x Instrument panel		5.0	51	42 in.·lbf
Front passenger airbag assembly x Instrument panel reinforcement		20	205	15
Airbag sensor assembly		20	205	15
Front airbag sensor x Body	Bolt	13	130	9
	Nut	13	130	9

STANDARD BOLT

HOW TO DETERMINE BOLT STRENGTH

SS0ZS–01

Bolt Type				Class
Hexagon Head Bolt		Stud Bolt	Weld Bolt	
Normal Recess Bolt	Deep Recess Bolt			
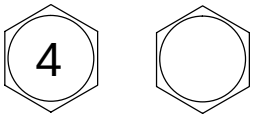 No Mark	 No Mark	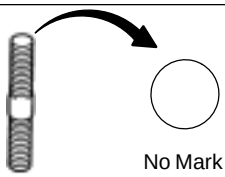 No Mark		4T
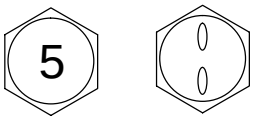	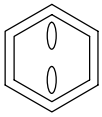			5T
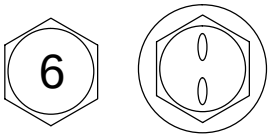 w/ Washer	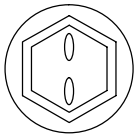 w/ Washer			6T
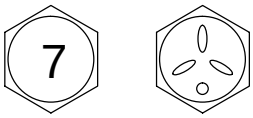	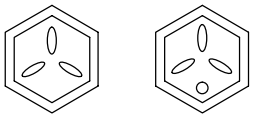			7T
				8T
				9T
	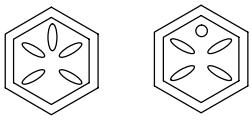			10T
	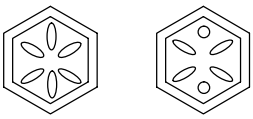			11T

B06431

SS0ZU–01

HOW TO DETERMINE NUT STRENGTH

Nut Type			Class
Present Standard Hexagon Nut	Old Standard Hexagon Nut		
	Cold Forging Nut	Cutting Processed Nut	
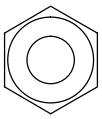 No Mark			4N
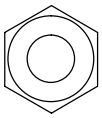 No Mark (w/ Washer)	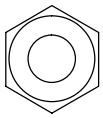 No Mark (w/ Washer)	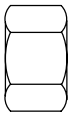 No Mark	5N (4T)
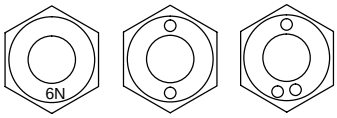 6N			6N
	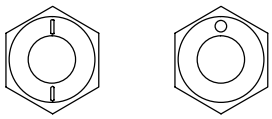	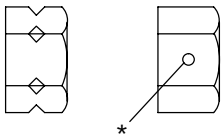 *	7N (5T)
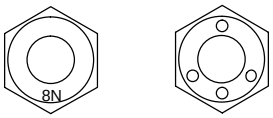 8N			8N
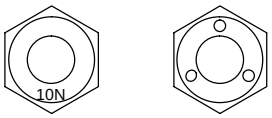 10N	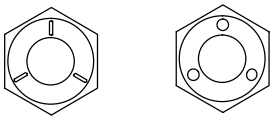	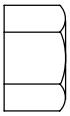 No Mark	10N (7T)
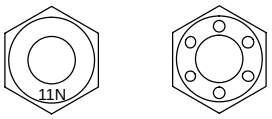 11N			11N
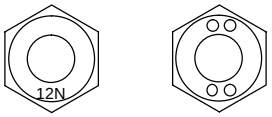 12N			12N

*: Nut with 1 or more marks on one side surface of the nut.

B06432

HINT:

Use the nut with the same number of the nut strength classification or the greater than the bolt strength classification number when tightening parts with a bolt and nut.

Example: Bolt = 4T

Nut = 4N or more

STARTING (5VZ–FE)

SS01A–07

SERVICE DATA

Starter (1.4 kW type)	Rated voltage and output power		12 V 1.4 kW
	No–load characteristics	Current	90 A or less at 11.5 V
		rpm	3,000 rpm or more
	Brush length	STD	15.5 mm (0.610 in.)
		Minimum	10.0 mm (0.394 in.)
	Spring installed load	STD	17.6 – 23.5 N (1.80 – 2.40 kgf, 4.0 – 5.3 lbf)
		Minimum	11.8 N (1.20 kgf, 2.6 lbf)
	Commutator		
	Diameter	STD	30 mm (1.180 in.)
		Minimum	29 mm (1.140 in.)
	Undercut depth	STD	0.6 mm (0.024 in.)
		Minimum	0.2 mm (0.008 in.)
	Circle runout	Maximum	0.05 mm (0.0020 in.)
	Magnetic switch		
	Contact plate for wear	Maximum	0.9 mm (0.035 in.)
Starter (1.8 kW type)	Rated voltage and output power		12 V 1.8 kW
	No–load characteristics	Current	100 A or less at 11.5 V
		rpm	2,500 rpm or more
	Shunt coil resistance	at 20°C (68°F)	1.4 – 1.9 Ω
	Brush length	STD	15.0 mm (0.591 in.)
		Minimum	9.0 mm (0.354 in.)
	Spring installed load	STD	21.5 – 27.5 N (2.20 – 2.80 kgf, 4.9 – 6.2 lbf)
		Minimum	12.7 N (1.30 kgf, 2.7 lbf)
	Commutator		
	Diameter	STD	35 mm (1.378 in.)
		Minimum	34 mm (1.339 in.)
	Undercut depth	STD	0.7 mm (0.028 in.)
		Minimum	0.2 mm (0.008 in.)
	Circle runout	Maximum	0.05 mm (0.0020 in.)
	Magnetic switch		
	Contact plate for wear	Maximum	0.9 mm (0.035 in.)

SS01B–01

TORQUE SPECIFICATION

Part tightened		N·m	kgf·cm	ft·lbf
Starter wire x Starer		8.8	90	78 in.·lbf
Starter x Transaxle		39	400	29
Lead wire x Terminal C of starter		5.9	60	52 in.·lbf
Field frame, Magnetic switch x Starter housing	1.4 kW type	5.9	60	52 in.·lbf
	1.8 kW type	9.3	95	82 in.·lbf
End cover x Field frame	1.4 kW type	1.5	15	13 in.·lbf
	1.8 kW type	3.8	39	34 in.·lbf
Terminal nut x Terminal C of starter, Terminal 30 of starter		17	170	12
Magnetic switch end cover x Magnetic switch	1.4 kW type	2.5	26	23 in.·lbf
	1.8 kW type	3.6	37	32 in.·lbf

STEERING

SS055–02

SERVICE DATA

DRIVE BELT		
Drive belt tension	New belt	135–180 lbf
Drive belt tension	Used belt	85–120 lbf
POWER STEERING FLUID		
Oil level rise	Maximum	Below 5 mm (0.20 in.)
Oil pressure at idle speed with valve closed	Minimum	8,336 kPa (85 kgf/cm^2, 1,209 psi)
STEERING WHEEL		
Steering wheel freeplay	Maximum	30 mm (1.18 in.)
Steering effort at idle speed	Maximum	4.9 N·m (50 kgf·cm, 43 in.·lbf)
PS VANE PUMP		
2RZ–FE and 3RZ–FE:		
Pump shaft and front housing bushing oil clearance	STD	0.03–0.05 mm (0.0012–0.0020 in.)
Pump shaft and front housing bushing oil clearance	Maximum	0.07 mm (0.0028 in.)
Vane plate height	Minimum	8.6 mm (0.339 in.)
Vane plate thickness	Minimum	1.397 mm (0.05500 in.)
Vane plate length	Minimum	14.991 mm (0.59020 in.)
Vane plate and pump rotor groove clearance	Maximum	0.035 mm (0.0014 in.)
Vane plate length	Pump rotor and cam ring mark	
	None	14.999–15.001 mm (0.59051–0.59059 in.)
	1	14.997–14.999 mm (0.59043–0.59051 in.)
	2	14.995–14.997 mm (0.59035–0.59043 in.)
	3	14.993–14.995 mm (0.59027–0.59035 in.)
	4	14.991–14.993 mm (0.59020–0.59027 in.)
Flow control valve spring length	Minimum	33.2 mm (1.307 in.)
Pump rotating torque	Maximum	0.25 N·m (2.5 kgf·cm, 2.2 in.·lbf) or less
5VZ–FE:		
Pump shaft and front housing bushing oil clearance	STD	0.03–0.05 mm (0.0012–0.0020 in.)
Pump shaft and front housing bushing oil clearance	Maximum	0.07 mm (0.0028 in.)
Vane plate height	Minimum	8.6 mm (0.339 in.)
Vane plate thickness	Minimum	1.397 mm (0.05500 in.)
Vane plate length	Minimum	14.991 mm (0.59020 in.)
Vane plate and pump rotor groove clearance	Maximum	0.035 mm (0.0014 in.)
Vane plate length	Pump rotor and cam ring mark	
	None	14.999–15.001 mm (0.59051–0.59059 in.)
	1	14.997–14.999 mm (0.59043–0.59051 in.)
	2	14.995–14.997 mm (0.59035–0.59043 in.)
	3	14.993–14.995 mm (0.59027–0.59035 in.)
	4	14.991–14.993 mm (0.59020–0.59027 in.)
Flow control valve spring length	Minimum	33.2 mm (1.307 in.)
Pump rotating torque	Maximum	0.27 N·m (2.8 kgf·cm, 2.4 in.·lbf) or less
MANUAL STEERING GEAR		
Steering rack runout	Maximum	0.3 mm (0.0118 in.)
Total preload	Turning	1.3 N·m (13 kgf·cm, 11.3 in.·lbf) or less

PS GEAR		
2WD:		
Steering rack runout	Maximum	0.3 mm (0.0118 in.)
Total preload	Turning	0.9–1.5 N·m (9–15 kgf·cm, 7.8–13.0 in.·lbf)
4WD and Pre runner:		
Steering rack runout	Maximum	0.3 mm (0.0118 in.)
Total preload	Turning	0.5–1.7 N·m (4.7–17.2 kgf·cm, 4.1–14.9 in.·lbf)

SS056–02

TORQUE SPECIFICATION

Part tightened		N·m	kgf·cm	ft·lbf
STEERING COLUMN				
Steering wheel set nut		35	360	26
Steering wheel pad set screw (Torx screw)		9.0	90	78 in.·lbf
Steering column assembly set nut and bolt		26	260	19
Main shaft assembly x Sliding yoke	2WD	35	360	26
Sliding yoke x Intermediate No.2 shaft	2WD	35	360	26
Control valve shaft x Intermediate No.2 shaft	2WD	35	360	26
Main shaft assembly x Universal joint No.2	4WD	35	360	26
Universal joint No.2 x Intermediate No.2 shaft	4WD	35	360	26
Control valve shaft x Intermediate No.2 shaft	4WD	35	360	26
Column hole cover x Body	2WD	8	80	69 in.·lbf
Column hole cover No.2 x Column hole cover x Body	4WD	8	80	69 in.·lbf
NON–TILT STEERING COLUMN:				
Column shift lever assembly x Column tube	Column shift	8	82	71 in.·lbf
Turn signal bracket set bolt	Column shift	3	30	26 in.·lbf
TILT STEERING COLUMN (TMC Made):				
Tilt lever retainer set nut		20	200	14
TILT STEERING COLUMN (NASTECH Made):				
Column shift lever assembly x Column tube		9.3	95	83 in.·lbf
Turn signal bracket set bolt		3.4	35	31 in.·lbf
PS VANE PUMP				
2RZ–FE, 3RZ–FE and 5VZ–FE:				
Union bolt x Pressure feed tube		47	475	34
Pressure port union x Pump housing		83	850	61
Bracket x Pump assembly	5VZ–FE	43	440	32
Oil reservoir set bolt	Front	13	130	9
	Rear	24	240	17
Vane pump pulley set nut		43	440	32
Oil pressure switch x Pressure feed tube	5VZ–FE	21	210	15
Vane pump assembly with bracket set bolt and nut	5VZ–FE	39	400	29
Vane pump assembly set bolt	2RZ–FE, 3RZ–FE	43	440	32
Rear housing set bolt		24	240	17
MANUAL STEERING GEAR				
Pinion bearing adjusting screw		17 (25)	174 (250)	13 (18)
Pinion bearing adjusting screw lock nut		88 (113)	894 (1,150)	65 (83)
Rack guide spring cap		25	250	18
Rack guide spring cap lock nut		50 (69)	513 (700)	37 (51)
Rack housing No.2 bracket set bolt		61	620	45
Rack x Rack end		61 (83)	621 (850)	45 (62)
Tie rod end lock nut		54	550	40
Manual steering gear assembly x Body		201	2,050	148
Sliding yoke x Intermediate No.2 shaft		35	360	26
Pinion shaft x Intermediate No.2 shaft		35	360	26

PS GEAR			
2WD:			
Self–locking nut	25	250	18
Rack housing cap	59	600	43
Control valve housing set bolt	18	185	13
Rack guide spring cap	25	250	18
Rack guide spring cap lock nut	50 (60)	513 (700)	37 (51)
Rack housing No.2 bracket set bolt	61	620	45
Rack x Rack end	60 (83)	615 (850)	45 (61)
Tie rod end lock nut	54	550	40
Turn pressure tube union nut	10 (13)	102 (130)	7 (9)
PS gear assembly set bolt	201	2,050	148
Pressure feed tube x Control valve housing	36 (45)	365 (450)	26 (33)
Return tube x Control valve housing	40 (49)	405 (500)	29 (36)
Sliding yoke x Intermediate No.2 shaft	35	360	26
Control valve shaft x Intermediate No.2 shaft	35	360	26
4WD and Pre runner:			
Cylinder end stopper	59 (78)	597 (800)	43 (58)
Rack guide spring cap lock nut	51 (69)	521 (700)	38 (51)
Rack x Rack end	76 (103)	770 (1,050)	56 (76)
Tie rod end lock nut	55	560	41
Turn pressure tube union nut	20 (25)	203 (250)	15 (18)
PS gear assembly set bolt	167	1,700	123
PS gear assembly set bolt and nut	191	1,950	141
Bracket x Body	167	1,700	123
Pressure feed tube x Control valve housing	36 (45)	365 (450)	26 (33)
Return tube x Control valve housing	40 (49)	405 (500)	29 (36)
Universal joint No.2 x Intermediate No.2 shaft	35	360	26
Control valve shaft x Intermediate No.2 shaft	35	360	26

( ): For use without SST

SUSPENSION AND AXLE

SS051–03

SERVICE DATA

Cold tire inflation pressure	P195/75R14	Front	200 kPa (2.0 kgf/cm^2, 29 psi)
		Rear	240 kPa (2.4 kgf/cm^2, 35 psi)
	P215/70R14	Front	200 kPa (2.0 kgf/cm^2, 29 psi)
		Rear	200 kPa (2.0 kgf/cm^2, 29 psi)
	P225/75R15 31x10.5R15LT	Front	180 kPa (1.8 kgf/cm^2, 26 psi)
		Rear	200 kPa (2.0 kgf/cm^2, 29 psi)
	P265/75R15	Front	180 kPa (1.8 kgf/cm^2, 26 psi)
		Rear	180 kPa (1.8 kgf/cm^2, 26 psi)
Front wheel Alignment (2WD)	Vehicle height Front: A – B Rear: C – D Measuring point A: Ground clearance of spindle center. B: Ground clearance of lower suspension arm bolt center. C: Ground clearance of rear axle shaft center. D: Ground clearance of leaf spring front hanger pin bolt center.		
	RZN140L	Front	44 mm (1.73 in.)
		Rear	46 mm (1.81 in.)
	RZN150L	Front	43 mm (1.69 in.)
		Rear	52 mm (2.05 in.)
	VZN150L	Front	43 mm (1.69 in.)
		Rear	50 mm (1.97 in.)
	Camber		0°04' ± 45' (0.06° ± 0.75°)
		Right–left error	30' (0.5°) or less
	Caster	RZN140L	0°36' ± 45' (0.6° ± 0.75°)
		RZN150L	0°54' ± 45' (0.9° ± 0.75°)
		VZN150L	0°48' ± 45' (0.8° ± 0.75°)
		Right–left error	30' (0.5°) or less
	Steering axis inclination		9°56' ± 45' (10.93° ± 0.75°)
		Right–left error	30' (0.5°) or less
	Toe–in (Total)		0°12' ± 12' (0.2° ± 0.2°, 2 ± 2 mm, 0.08 ± 0.08 in.)
		Rack end length difference	1.5 mm (0.059 in.) or less
	Wheel angle (Max.)	Inside wheel	36° (33° – 36°)
		Outside wheel: Reference	31° (28° – 31°)

Front wheel Alignment (4WD and pre runner)	Vehicle height Measureing point Front: A – B Rear: C – D A: Ground clearance of spindle center. B: Ground clearance of front adjusting cam bolt center. C: Ground clearance of leaf spring front hanger pin bolt center. D: Ground clearance of rear axle shaft center.		
	RZN161L	Front Rear	49 mm (1.93 in.) 35 mm (1.38 in.)
	RZN171L	Front Rear	48 mm (1.89 in.) 48 mm (1.89 in.)
	RZN191L	Front Rear	46 mm (1.81 in.) 39 mm (1.54 in.)
	RZN196L	Front Rear	45 mm (1.77 in.) 51 mm (2.01 in.)
	VZN170L	Front Rear	48 mm (1.89 in.) 50 mm (1.97 in.)
	VZN195L	Front Rear	45 mm (1.77 in.) 53 mm (2.09 in.)
	RZN161L model		
	Camber Right–left error Caster Right–left error Steering axis inclination Right–left error		0°12' ± 45' (0.20° ± 0.75°) 30' (0.5°) or less 1°42' ± 45' (1.7° ± 0.75°) 30' (0.5°) or less 10°30' ± 45' (10.5° ± 0.75°) 30' (0.5°) or less
	RZN171L model		
	Camber Right–left error Caster Right–left error Steering axis inclination Right–left error		0°18' ± 45' (0.3° ± 0.75°) 30' (0.5°) or less 1°30' ± 45' (1.5° ± 0.75°) 30' (0.5°) or less 10°30' ± 45' (10.5° ± 0.75°) 30' (0.5°) or less
	RZN191L model		
	Camber Right–left error Caster Right–left error Steering axis inclination Right–left error		0°18' ± 45' (0.3° ± 0.75°) 30' (0.5°) or less 1°36' ± 45' (1.6° ± 0.75°) 30' (0.5°) or less 10°30' ± 45' (10.5° ± 0.75°) 30' (0.5°) or less
	RZN196L model		
	Camber Right–left error Caster Right–left error Steering axis inclination Right–left error		0°18' ± 45' (0.3° ± 0.75°) 30' (0.5°) or less 1°24' ± 45' (1.4° ± 0.75°) 30' (0.5°) or less 10°24' ± 45' (10.4° ± 0.75°) 30' (0.5°) or less

Front wheel Alignment (4WD and pre runner)	VZN170L model		
	Camber		0°18' ± 45' (0.3° ± 0.75°)
		Right–left error	30' (0.5°) or less
	Caster		1°25' ± 45' (1.42° ± 0.75°)
		Right–left error	30' (0.5°) or less
	Steering axis inclination		10°30' ± 45' (10.5° ± 0.75°)
		Right–left error	30' (0.5°) or less
	VZN195L model		
	Camber		0°18' ± 45' (0.3° ± 0.75°)
		Right–left error	30' (0.5°) or less
	Caster		1°18' ± 45' (1.3° ± 0.75°)
		Right–left error	30' (0.5°) or less
	Steering axis inclination		10°24' ± 45' (10.4° ± 0.75°)
		Right–left error	30' (0.5°) or less
	Toe–in (Total)		0°12' ± 12' (0.2° ± 0.2°, 2 ± 2 mm, 0.08 ± 0.08 in.)
		Rack end length difference	1.5 mm (0.059 in.) or less
	Wheel angle (Max.)	Inside wheel	37°05' (35°05' – 38°05') 37.08° (35.08° – 38.08°)
		Outside wheel: Reference	32°20' (32.33°)
Front axle (2WD)	Axle hub bearing backlash	Max.	0.05 mm (0.0020 in.)
	Axle hub preload (at starting)		Frictional force plus 6 – 18 N (0.6 – 1.8 kgf, 1.3 – 4.0 lbf)
Front drive shaft	Front drive shaft length		436.2 ± 2.0 mm (17.173 ± 0.079 in.)
Front suspension (2WD)	Upper ball joint turning torque		0.5 – 3.5 N·m (5 – 35 kgf·cm, 4 – 30 in.·lbf)
	Lower ball joint turning torque		0.5 – 3.5 N·m (5 – 35 kgf·cm, 4 – 30 in.·lbf)
	Lower ball joint excessive play	Max.	0.5 mm (0.020 in.)
Front suspension (4WD and pre runner)	Upper ball joint turning torque		0.7 – 4.4 N·m (7 – 45 kgf·cm, 6 – 39 in.·lbf)
	Lower ball joint turning torque		0.1 – 2.5 N·m (1 – 25 kgf·cm, 1 – 22 in.·lbf)
	Lower ball joint excessive play	Max.	0.5 mm (0.020 in.)
	Stabilizer bar link ball joint turning toque		0.05 – 2.0 N·m (0.5 – 20 kgf·cm, 0.4 – 17 in.·lbf)
Rear axle shaft	Axle shaft bearing backlash	Max.	0.7 mm (0.028 in.)
	Axle shaft deviation	Max.	0.1 mm (0.0039 in.)
	Shaft runout	Max.	2.0 mm (0.079 in.)
	Flange runout	Max.	0.1 mm (0.004 in.)

Front differential	Companion flange vertical runout Max.	0.10 mm (0.0039 in.)
	Companion flange horizontal runout Max.	0.10 mm (0.0039 in.)
	Drive pinion preload (at starting) New bearing	1.2 – 1.9 N·m (12 – 19 kgf·cm, 10.4 – 16.5 in.·lbf)
	Reused bearing	0.6 – 1.0 N·m (6 – 10 kgf·cm, 5.2 – 8.7 in.·lbf)
	Total preload (at starting)	Drive pinion preload plus 0.4 – 0.6 N·m (4 – 6 kgf·cm, 3.5 – 5.2 in.·lbf)
	Drive pinion to ring gear backlash	0.13 – 0.18 mm (0.0051 – 0.0071 in.)
	Side gear backlash	0 – 0.20 mm (0 – 0.0079 in.)
	Rear oil seal drive in depth	4.5 mm (0.177 in.)
	Side oil seal drive in depth	0 mm (0 in.)
	Side tube oil seal drive in depth	5.5 mm (0.217 in.)
	Side gear thrust washer thickness	0.96 – 1.04 mm (0.0378 – 0.0409 in.)
		1.06 – 1.14 mm (0.0417 – 0.0449 in.)
		1.16 – 1.24 mm (0.0457 – 0.0488 in.)
		1.26 – 1.34 mm (0.0496 –0.0528 in.)
	Side gear bearing adjusting washer thickness	2.00 – 2.02 mm (0.0787 – 0.0795 in.)
		2.03 – 2.05 mm (0.0799 – 00807 in.)
		2.06 – 2.08 mm (0.0811 – 0.0819 in.)
		2.09 – 2.11 mm (0.0823 – 0.0831 in.)
		2.12 – 2.14 mm (0.0835 – 0.0843 in.)
		2.15 – 2.17 mm (0.0846 – 0.0854 in.)
		2.18 – 2.20 mm (0.0858 – 0.0866 in.)
		2.21 – 2.23 mm (0.0870 – 0.0878 in.)
		2.24 – 2.26 mm (0.0882 – 0.0890 in.)
		2.27 – 2.29 mm (0.0894 – 0.0902 in.)
		2.30 – 2.32 mm (0.0906 – 0.0913 in.)
		2.33 – 2.35 mm (0.0917 – 0.0925 in.)
		2.36 – 2.38 mm (0.0929 – 0.0937 in.)
		2.39 – 2.41 mm (0.0941 – 0.0949 in.)
		2.42 – 2.44 mm (0.0953 – 0.0961 in.)
		2.45 – 2.47 mm (0.0965 – 0.0972 in.)
		2.48 – 2.50 mm (0.0976 – 0.0984 in.)
		2.51 – 2.53 mm (0.0988 – 0.0996 in.)
		2.54 – 2.56 mm (0.1000 – 01008 in.)
		2.57 – 2.59 mm (0.1012 – 0.1020 in.)
		2.60 – 2.62 mm (0.1024 – 0.1031 in.)
		2.63 – 2.65 mm (0.1035 – 0.1043 in.)
		2.66 – 2.68 mm (0.1047 – 0.1055 in.)
		2.69 – 2.71 mm (0.1059 – 0.1067 in.)
		2.72 – 2.74 mm (0.1071 – 0.1079 in.)
		2.75 – 2.77 mm (0.1083 – 0.1091 in.)
		2.78 – 2.80 mm (0.1094 – 0.1102 in.)

Front differential (cont'd)	Drive pinion bearing adjusting washer thickness	1.69 – 1.71 mm (0.0665 – 0.0673 in.)
		1.72 – 1.74 mm (0.0677 – 0.0685 in.)
		1.75 – 1.77 mm (0.0689 – 0.0697 in.)
		1.78 – 1.80 mm (0.0701 – 0.0709 in.)
		1.81 – 1.83 mm (0.0713 – 0.0720 in.)
		1.84 – 1.86 mm (0.0724 – 0.0732 in.)
		1.87 – 1.89 mm (0.0736 – 0.0744 in.)
		1.90 – 1.92 mm (0.0748 – 0.0756 in.)
		1.93 – 1.95 mm (0.0760 – 0.0768 in.)
		1.96 – 1.98 mm (0.0772 – 0.0780 in.)
		1.99 – 2.01 mm (0.0783 – 0.0791 in.)
		2.02 – 2.04 mm (0.0795 – 0.0803 in.)
		2.05 – 2.07 mm (0.0807 – 0.0815 in.)
		2.08 – 2.10 mm (0.0819 – 0.0827 in.)
		2.11 – 2.13 mm (0.0831 – 0.0839 in.)
		2.14 – 2.16 mm (0.0843 – 0.0850 in.)
		2.17 – 2.19 mm (0.0854 – 0.0862 in.)
		2.20 – 2.22 mm (0.0866 – 0.0874 in.)
		2.23 – 2.25 mm (0.0878 – 0.0886 in.)
		2.26 – 2.28 mm (0.0890 – 0.0898 in.)
		2.29 – 2.31 mm (0.0902 – 0.0909 in.)
		2.32 – 2.34 mm (0.0913 – 0.0921 in.)
	A.D.D. sleeve fork to clutch sleeve clearance w/ A.D.D.	0.35 mm (0.0138 in.) or less
	Differential case needle bearing press in depth	0.3 ± 0.3 mm (0.012 ± 0.012 in.)
Rear differential (2RZ–FE)	Companion flange vertical runout Max.	0.10 mm (0.0039 in.)
	Companion flange horizontal runout Max.	0.10 mm (0.0039 in.)
	Drive pinion preload (at starting) New bearing	1.4 – 2.1 N·m (14 – 21 kgf·cm, 12.2 – 18.3 in.·lbf)
	Reused bearing	0.6 – 1.0 N·m (6 – 10 kgf·cm, 5.2 – 8.7 in.·lbf)
	Total preload (at starting)	Drive pinion preload plus 0.4 – 0.6 N·m (4 – 6 kgf·cm, 3.5 – 5.2 in.·lbf)
	Drive pinion to ring gear backlash	0.13 – 0.18 mm (0.0051 – 0.0071 in.)
	Side gear backlash	0 05 – 0.20 mm (0.0020 – 0.0079 in.)
	Ring gear runout Max.	0.07 mm (0.0028 in.)
	Differential case runout Max.	0.07 mm (0.0028 in.)
	Drive pinion oil seal drive in depth	1.5 mm (0.059 in.)
	Side gear thrust washer thickness	1.0 mm (0.039 in.)
		1.1 mm (0.043 in.)
		1.2 mm (0.047 in.)
		1.3 mm (0.051 in.)

Rear differential (2RZ–FE, cont'd)	Drive pinion bearing washer thickness	2.24 mm (0.0882 in.)
		2.27 mm (0.0894 in.)
		2.30 mm (0.0906 in.)
		2.33 mm (0.0917 in.)
		2.36 mm (0.0929 in.)
		2.39 mm (0.0941 in.)
		2.42 mm (0.0953 in.)
		2.45 mm (0.0965 in.)
		2.48 mm (0.0976 in.)
		2.51 mm (0.0988 in.)
		2.54 mm (0.1000 in.)
		2.57 mm (0.1012 in.)
		2.60 mm (0.1024 in.)
		2.63 mm (0.1035 in.)
		2.66 mm (0.1047 in.)
		2.69 mm (0.1059 in.)
		2.72 mm (0.1071 in.)
Rear differential (3RZ–FE, 5VZ–FE w/o Diff. lock)	Companion flange vertical runout Max.	0.09 mm (0.0035 in.)
	Companion flange horizontal runout Max.	0.09 mm (0.0035 in.)
	Drive pinion preload (at starting) New bearing	1.1 – 1.7 N·m (12 – 18 kgf·cm, 10.0 – 15.2 in.·lbf)
	Reused bearing	0.6 – 0.9 N·m (7 – 10 kgf·cm, 5.7 – 8.3 in.·lbf)
	Total preload (at starting)	Drive pinion preload plus 0.4 – 0.6 N·m (4 – 6 kgf·cm, 3.5 – 5.2 in.·lbf)
	Drive pinion to ring gear backlash	0.13 – 0.18 mm (0.0051 – 0.0071 in.)
	Side gear backlash	0 05 – 0.20 mm (0.0020 – 0.0079 in.)
	Ring gear runout Max.	0.05 mm (0.0020 in.)
	Differential case runout Max.	0.04 mm (0.0016 in.)
	Drive pinion oil seal drive in depth	0.5 mm (0.020 in.)
	Side gear thrust washer thickness	1.50 mm (0.0590 in.)
		1.55 mm (0.0610 in.)
		1.60 mm (0.0630 in.)
		1.65 mm (0.0650 in.)
		1.70 mm (0.0669 in.)
		1.75 mm (0.0689 in.)
		1.80 mm (0.0709 in.)
		1.85 mm (0.0728 in.)
		1.90 mm (0.0748 in.)

Rear differential (3RZ–FE, 5VZ–FE w/o Diff. lock, cont'd)	Side bearing adjusting washer thickness	58	2.58 mm (0.1015 in.)
		60	2.60 mm (0.1024 in.)
		62	2.62 mm (0.1031 in.)
		64	2.64 mm (0.1039 in.)
		66	2.66 mm (0.1047 in.)
		68	2.68 mm (0.1055 in.)
		70	2.70 mm (0.1063 in.)
		72	2.72 mm (0.1071 in.)
		74	2.74 mm (0.1079 in.)
		76	2.76 mm (0.1087 in.)
		78	2.78 mm (0.1094 in.)
		80	2.80 mm (0.1102 in.)
		82	2.82 mm (0.1110 in.)
		84	2.84 mm (0.1118 in.)
		86	2.86 mm (0.1126 in.)
		88	2.88 mm (0.1134 in.)
		90	2.90 mm (0.1142 in.)
		92	2.92 mm (0.1150 in.)
		94	2.94 mm (0.1157 in.)
		96	2.96 mm (0.1165 in.)
		98	2.98 mm (0.1173 in.)
		00	3.00 mm (0.1181 in.)
		02	3.02 mm (0.1189 in.)
		04	3.04 mm (0.1197 in.)
		06	3.06 mm (0.1205 in.)
		08	3.08 mm (0.1213 in.)
		10	3.10 mm (0.1220 in.)
		12	3.12 mm (0.1228 in.)
		14	3.14 mm (0.1236 in.)
		16	3.16 mm (0.1244 in.)
		18	3.18 mm (0.1252 in.)
		20	3.20 mm (0.1260 in.)
		22	3.22 mm (0.1268 in.)
		24	3.24 mm (0.1276 in.)
		26	3.26 mm (0.1283 in.)
		28	3.28 mm (0.1291 in.)
		30	3.30 mm (0.1299 in.)
		32	3.32 mm (0.1307 in.)
		34	3.34 mm (0.1315 in.)
		36	3.36 mm (0.1323 in.)
		38	3.38 mm (0.1331 in.)
		40	3.40 mm (0.1339 in.)
		42	3.42 mm (0.1346 in.)
		44	3.44 mm (0.1354 in.)
		46	3.46 mm (0.1362 in.)
		48	3.48 mm (0.1370 in.)

Rear differential (3RZ–FE, 5VZ–FE w/o Diff. lock, cont'd)	Drive pinion bearing adjusting washer thickness	87	1.87 mm (0.0736 in.)
		88	1.88 mm (0.0740 in.)
		89	1.89 mm (0.0744 in.)
		90	1.90 mm (0.0748 in.)
		91	1.91 mm (0.0752 in.)
		92	1.92 mm (0.0756 in.)
		93	1.93 mm (0.0760 in.)
		94	1.94 mm (0.0764 in.)
		95	1.95 mm (0.0768 in.)
		96	1.96 mm (0.0772 in.)
		97	1.97 mm (0.0776 in.)
		98	1.98 mm (0.0780 in.)
		99	1.99 mm (0.0783 in.)
		00	2.00 mm (0.0787 in.)
		01	2.01 mm (0.0791 in.)
		02	2.02 mm (0.0795 in.)
		03	2.03 mm (0.0799 in.)
		04	2.04 mm (0.0803 in.)
		05	2.05 mm (0.0807 in.)
		06	2.06 mm (0.0811 in.)
		07	2.07 mm (0.0815 in.)
		08	2.08 mm (0.0819 in.)
		09	2.09 mm (0.0823 in.)
		10	2.10 mm (0.0827 in.)
		11	2.11 mm (0.0831 in.)
		12	2.12 mm (0.0835 in.)
		13	2.13 mm (0.0839 in.)
		14	2.14 mm (0.0843 in.)
		15	2.15 mm (0.0846 in.)
		16	2.16 mm (0.0850 in.)
		17	2.17 mm (0.0854 in.)
		18	2.18 mm(0.0858 in.)
		19	2.19 mm (0.0862 in.)
		20	2.20 mm (0.0866 in.)
		21	2.21 mm (0.0870 in.)
		22	2.22 mm (0.0874 in.)
		23	2.23 mm (0.0878 in.)
		24	2.24 mm (0.0882 in.)
		25	2.25 mm (0.0886 in.)
		26	2.26 mm (0.0890 in.)
		27	2.27 mm (0.0894 in.)
		28	2.28 mm (0.0898 in.)

Rear differential (3RZ–FE, 5VZ–FE w/ Diff. lock)	Companion flange vertical runout	Max.	0.10 mm (0.0039 in.)
	Companion horizontal lateral runout	Max.	0.10 mm (0.0039 in.)
	Drive pinion preload (at starting)	New bearing	0.9 – 1.6 N·m (10 – 16 kgf·cm, 8.7 – 13.9 in.·lbf)
		Reused bearing	0.5 – 0.8 N·m (5 – 8 kgf·cm, 4.3 – 6.9 in.·lbf)
	Total preload (at starting)		Drive pinion preload plus 0.4 – 0.6 N·m (4 – 6 kgf·cm, 3.5 – 5.2 in.·lbf)
	Drive pinion to ring gear backlash		0.13 – 0.18 mm (0.0051 – 0.0071 in.)
	Side gear backlash		0 05 – 0.20 mm (0.0020 – 0.0079 in.)
	Ring gear runout	Max.	0.10 mm (0.0039 in.)
	Differential case runout	Max.	0.07 mm (0.0028 in.)
	Drive pinion oil seal drive in depth		1.0 mm (0.039 in.)
	Diff. lock shift fork to sleeve clearance		0.15 – 0.35 mm (0.006 – 0.014 in.)
	Side gear thrust washer thickness		0.9 mm (0.035 in.)
			1.0 mm (0.039 in.)
			1.1 mm (0.043 in.)
			1.2 mm (0.047 in.)
			1.3 mm (0.051 in.)
	Drive pinion bearing adjusting washer thickness		1.70 mm (0.0669 in.)
			1.73 mm (0.0681 in.)
			1.76 mm (0.0693 in.)
			1.79 mm (0.0705 in.)
			1.82 mm (0.0717 in.)
			1.85 mm (0.0728 in.)
			1.88 mm (0.0740 in.)
			1.91 mm (0.0752 in.)
			1.94 mm (0.0764 in.)
			1.97 mm (0.0776 in.)
			2.00 mm (0.0787 in.)
			2.03 mm (0.0799 in.)
			2.06 mm (0.0811 in.)
			2.09 mm (0.0823 in.)
			2.12 mm (0.0835 in.)
			2.15 mm (0.0846 in.)
			2.18 mm (0.0858 in.)
			2.21 mm (0.0870 in.)
			2.24 mm (0.0882 in.)
			2.27 mm (0.0894 in.)
			2.30 mm (0.0906 in.)
			2.33 mm (0.0917 in.)

SS052–03

TORQUE SPECIFICATION

Part tightened	N·m	kgf·cm	ft·lbf
Front (2WD):			
Axle hub x Disc	64	650	47
Hub nut	110	1,150	83
Tie rod end lock nut	54	550	40
Steering knuckle x Upper ball joint	110	1,100	80
Steering knuckle x Lower ball joint	160	1,600	116
Tie rod end x Lower ball joint	72	730	53
Steering knuckle x Dust cover	8.3	85	74 in.·lbf
Steering knuckle x Brake caliper	108	1,100	80
Upper suspension arm x Upper ball joint	39	400	29
Lower suspension arm x Spring bumper	43	440	32
Lower suspension arm x Lower suspension arm No. 3	150	1,530	111
Shock absorber x Frame	25	250	18
Lower suspension arm x Shock absorber	39	400	29
Lower suspension arm x Stabilizer bar bolt	39	400	29
Lower suspension arm x Frame	200	2,050	148
Upper suspension arm shaft x Frame	130	1,300	94
Upper suspension arm shaft x Upper suspension arm	125	1,270	92
Lower suspension arm No. 3 x Lower ball joint	110	1,100	80
Lower suspension arm x Strut bar	150	1,530	111
Strut bar x Frame	300	3,050	221
Stabilizer bar bracket x Frame	29	300	22
ABS speed sensor x Steering knuckle	8.0	82	71 in.·lbf
ABS speed sensor wire clamp x Steering knuckle	8.0	82	71 in.·lbf
ABS speed sensor wire clamp x Upper suspension arm	8.0	82	71 in.·lbf
Front (4WD and pre runner):			
Hub nut	110	1,150	83
Tie rod end lock nut	55	560	41
Steering knuckle x Lower ball joint	80	820	59
Tie rod end x Lower ball joint	90	930	67
Steering knuckle x Brake caliper	123	1,250	90
Steering knuckle x Dust cover	18	185	13
Flexible hose x Brake caliper	30	310	22
Drive shaft x Axle hub (w/o Free wheel hub)	235	2,400	174
Axle hub bearing lock nut (w/ Free wheel hub and pre runner)	274	2,800	203
Free wheel hub cover x Free wheel hub body	10	100	7
Free wheel hub body x Axle hub	31	315	23
Upper suspension arm x Upper ball joint	105	1,100	80
Lower suspension arm x Frame	130	1,325	96
Lower suspension arm x Lower ball joint	140	1,450	103
Lower suspension arm x No. 1, No. 2 spring bumper	31 (23)	315 (235)	23 (17)

( ) For use with SST

Upper suspension arm x Frame		115	1,200	87
Frame x Suspension support		64	650	47
Shock absorber x Suspension support		29	300	22
Lower suspension arm x Shock absorber		135	1,400	101
Lower suspension arm x Stabilizer bar link		69	700	51
Stabilizer bar x Stabilizer bar link		29	300	22
Stabilizer bar bracket x Frame		25	260	19
ABS speed sensor x Steering knuckle		8.0	82	71 in.·lbf
ABS speed sensor wire clamp x Steering knuckle		8.0	82	71 in.·lbf
ABS speed sensor wire clamp x Upper suspension arm		8.0	82	71 in.·lbf
Front differential				
Drive pinion x Companion flange	STD	108	1,100	80
	Maximum	223	2,275	165
Differential front mounting cushion x Frame		137	1,400	101
Differential rear mounting cushion x Frame		87	890	64
Differential front mounting cushion x Differential		157	1,600	116
Differential rear mounting cushion x Differential		108	1,100	80
Ring gear x Differential case		97	985	71
Differential carrier x Differential tube	w/o A.D.D.	105	1,070	77
	w/ A.D.D.	78	800	58
Differential carrier x Side bearing retainer		69	700	51
Differential x Front propeller shaft		74	750	54
A.D.D. clutch case x Differential		78	800	58
A.D.D. clutch case x Differential tube		78	800	58
A.D.D. actuator x A.D.D. clutch case		21	210	15
Screw plug x Clutch case cover		20	200	14
Screw plug x A.D.D. actuator		13	130	9
A.D.D. switch x Clutch case cover		40	410	30
Differential carrier x Tube		13	130	9
Drain plug		65	660	48
Filler plug		39	400	29

Part tightened		N·m	kgf·cm	ft·lbf
Rear:				
Hub nut		110	1,150	83
Axle housing x Backing plate		68	700	50
Parking brake cable x Backing plate	2WD	9.3	95	82 in.·lbf
Parking brake cable clamp set bolt	2WD	26	260	19
Shock absorber x Spring seat	2WD 4WD	26 71	260 730	19 53
Shock absorber x Frame	2WD 4WD	26 71	260 730	19 53
Brake line union nut		15	155	11
U–bolt x Spring seat		123	1,250	90
Leaf spring hanger pin bolt x Frame		157	1,600	116
Shackle pin x Leaf spring		92	930	67
Shackle pin x Frame		92	930	67
Leaf spring center bolt		44	450	33
Spring bumper x Frame	2WD only	29	300	22
ABS speed sensor x Axle housing		8.0	82	71 in.·lbf
Rear differential (2RZ–FE)				
Differential x Propeller shaft		74	750	56
Differential carrier x Axle housing		25	250	18
Differential carrier x Bearing cap		85	870	63
Differential case x Ring gear		97	985	71
Drive pinion x Companion flange	STD Maximum	108 235	1,100 2,400	80 174
Adjusting nut lock x Bearing cap		13	130	9
Drain plug, Filler plug		49	500	36
Rear differential (3RZ–FE, 5VZ–FE, w/o Diff. lock)				
Differential x Propeller shaft		74	750	56
DIfferential carrier x Axle housing		73	740	54
Differential carrier x Bearing cap		113	1,150	83
Drive pinion x Companion flange	STD Maximum	147 451	1,500 4,600	109 333
Differential case x Ring gear		125	1,270	92
Drain plug, Filler plug		49	500	36
Rear differential (3RZ–FE, 5VZ–FE w/ Diff. lock)				
Differential x Propeller shaft		74	750	56
Differential carrier x Axle housing		25	250	18
Differential carrier x Bearing cap		78	800	58
Differential case x Ring gear		97	985	71
Adjusting nut lock x Bearing cap		13	130	9
Differential RH case x Differential LH case		47	480	35
Differential carrier x Diff. lock indicator switch		40	410	31
Differential carrier x Shaft retainer		24	240	17

Part tightened		N·m	kgf·cm	ft·lbf
Drive pinion x Companion flange	STD	196	2,000	145
	Maximum	343	3,500	253
Differential carrier x Screw plug		22	220	16
DIfferential carrier x Actuator		26	270	20
Drain plug, Filler plug		49	500	36

TRANSFER

SERVICE DATA

SS05I–01

Transfer unit		
Hose depth	Minimum	13 mm (0.51 in.)
Oil pump body		
Body clearance	STD	0.09 – 0.16 mm (0.0035 – 0.0063 in.)
	Maximum	0.16 mm (0.0063 in.)
Tip clearance	STD	0.05 – 0.15 mm (0.0020 – 0.0059 in.)
	Maximum	0.15 mm (0.0059 in.)
Side clearance	STD	0.03 – 0.10 mm (0.0012 – 0.0039 in.)
	Maximum	0.10 mm (0.0039 in.)
Rear output shaft assembly		
Drive sprocket thrust clearance	STD	0.10 – 0.25 mm (0.0039 – 0.0098 in.)
	Maximum	0.25 mm (0.0098 in.)
Rear output shaft journal diameter		
(part A)	Minimum	27.98 mm (1.1016 in.)
(part B)	Minimum	36.98 mm (1.4561 in.)
Drive sprocket radial clearance	STD	0.010 – 0.055 mm (0.0004 – 0.0022 in.)
	Maximum	0.055 mm (0.0022 in.)
Front drive shift fork to clutch sleeve clearance	Maximum	1.0 mm (0.039 in.)
High and low shift fork to sleeve clearance	Maximum	1.0 mm (0.039 in.)
Rear output shaft snap ring thickness	Mark	
	A	2.10 – 2.15 mm (0.0827 – 0.0846 in.)
	B	2.15 – 2.20 mm (0.0846 – 0.0866 in.)
	C	2.20 – 2.25 mm (0.0866 – 0.0886 in.)
	D	2.25 – 2.30 mm (0.0886 – 0.0906 in.)
	E	2.30 – 2.35 mm (0.0906 – 0.0925 in.)
	F	2.35 – 2.40 mm (0.0925 – 0.0945 in.)
	G	2.40 – 2.45 mm (0.0945 – 0.0965 in.)
	H	2.45 – 2.50 mm (0.0965 – 0.0984 in.)
	J	2.50 – 2.55 mm (0.0984 – 0.1004 in.)
	K	2.00 – 2.05 mm (0.0787 – 0.0807 in.)
	L	2.05 – 2.10 mm (0.0807 – 0.0827 in.)

Input shaft		
Input shaft journal outer diameter	Minimum	47.59 mm (1.8736 in.)
Input shaft bushing diameter	Maximum	39.14 mm (1.5409 in.)
Synchronizer ring to sprocket clearance	STD	1.05 – 1.85 mm (0.0413 – 0.0728 in.)
	Minimum	0.80 mm (0.0315 in.)
Input shaft snap ring thickness	Mark	
	A	2.10 – 2.15 mm (0.0827 – 0.0846 in.)
	B	2.15 – 2.20 mm (0.0846 – 0.0866 in.)
	C	2.20 – 2.25 mm (0.0866 – 0.0886 in.)
	D	2.25 – 2.30 mm (0.0886 – 0.0906 in.)
	E	2.30 – 2.35 mm (0.0906 – 0.0925 in.)
	F	2.35 – 2.40 mm (0.0925 – 0.0945 in.)
	G	2.40 – 2.45 mm (0.0945 – 0.0965 in.)
	H	2.45 – 2.50 mm (0.0965 – 0.0984 in.)
	J	2.50 – 2.55 mm (0.0984 – 0.1004 in.)
	K	2.55 – 2.60 mm (0.1004 – 0.1024 in.)
	L	2.60 – 2.65 mm (0.1024 – 0.1043 in.)
	M	2.65 – 2.70 mm (0.1043 – 0.1063 in.)
	N	2.70 – 2.75 mm (0.1063 – 0.1083 in.)
	P	2.75 – 2.80 mm (0.1083 – 0.1102 in.)
	Q	2.80 – 2.85 mm (0.1102 – 0.1122 in.)
	R	2.85 – 2.90 mm (0.1122 – 0.1142 in.)
	S	2.90 – 2.95 mm (0.1142 – 0.1161 in.)
	T	2.95 – 3.00 mm (0.1161 – 0.1181 in.)
	U	3.00 – 3.05 mm (0.1181 – 0.1201 in.)
Planetary gear		
Pinion gear thrust clearance	STD	0.11 – 0.84 mm (0.0043 – 0.0331 in.)
	Maximum	0.84 mm (0.0331 in.)
Pinion gear radial clearance	STD	0.009 – 0.038 mm (0.0004 – 0.0015 in.)
	Maximum	0.038 mm (0.0015 in.)
Outer bearing snap ring thickness	Mark	
	1	1.45 – 1.50 mm (0.0571 – 0.0591 in.)
	2	1.50 – 1.55 mm (0.0591 – 0.0610 in.)
	3	1.55 – 1.60 mm (0.0610 – 0.0630 in.)
	4	1.60 – 1.65 mm (0.0630 – 0.0650 in.)
	5	1.65 – 1.70 mm (0.0650 – 0.0669 in.)
Oil seal		
Shift fork shaft oil seal depth		–0.5 – 0.5 mm (–0.020 – 0.020 in.)

SS05J–01

TORQUE SPECIFICATION

Part tightened	N·m	kgf·cm	ft·lbf
Transmission shift control rod x Shift lever	13	133	10
Transmission shift lever assembly	6.0	61	53 in.·lbf
Engine rear mounting x Crossmember	18	185	13
Crossmember x Frame	72	734	53
Engine rear mounting x Transmission	65	660	48
Transfer x Transfer adaptor	24	240	17
Vehicle speed sensor	11.5	115	8
4WD position switch	37	380	27
L4 position switch	37	380	27
Neutral position switch	37	380	27
Plug	37	380	27
Protector	18	185	13
Front bearing retainer	11.5	115	8
Control retainer x Front case	18	185	13
Upper cover x Front case	18	185	13
Companion flange lock nut	118	1,200	87
Extension housing x Rear case	12	120	9
Front case x Rear case	28	285	21
Straight screw plug for shift fork shaft	18.6	190	14
Front drive shift fork (w/ One touch 2–4 selector system)	24	240	17
Actuator assembly x Rear case (w/ One touch 2–4 selector system)	20	200	14
Separator with oil strainer x Front case	7.5	80	69 in.·lbf
Oil pump body x Front case	7.5	80	69 in.·lbf
Straight screw plug for ring gear	18.6	190	14
Relief valve x Oil pump body	29.4	300	21
Oil pump plate x Oil pump body	7.4	75	65 in.·lbf

2000 VEHICLE IDENTIFICATION NUMBER

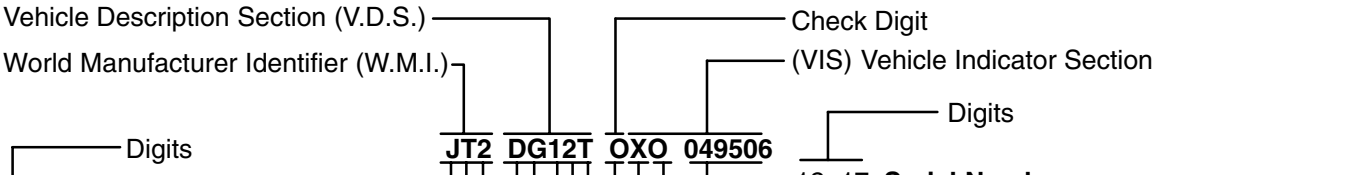

1. **World Source:**
   J = Japan
   1 = USA: NUMMI
   2 = Canada: TMMC
   4 = USA: TMM & NUMMI
   5 = USA: TMM

2. **Manufacturer:**
   T = Toyota N = NUMMI

3. **Vehicle Type:**
   D, X, 1, 2 = Passenger Vehicle
   3 = Multipurpose Passenger Vehicle
   A, B = Truck
   5 = Incomplete Vehicle

4. **Body Type/Drive Type:**
   Passenger Vehicle:
   A = 2Dr Sedan 2WD
   B = 4Dr Sedan 2WD
   C = 2Dr Coupe 2WD
   D = 3Dr Liftback 2WD
   F = 2Dr Convertible 2WD
   G = 4Dr Wagon 2WD
   M = 4Dr Van 2WD
   Z = 5Dr Wagon 2WD

   Multipurpose Passenger Vehicle:
   G = 4Dr Wagon 2WD
   H = 4Dr Wagon 4WD
   X = 2Dr Wagon 2WD
   Y = 2Dr Wagon 4WD

   Truck:
   Standard Wheel Base
   J = STD Cab 2WD
   K = STD Cab 4WD
   R = Ext Cab 2WD
   B = Ext Cab 4WD
   Short Wheel Base
   N = STD Cab 1/2 Ton 2WD
   P = STD Cab 1/2 Ton 4WD
   Extra Long Wheel Base
   S = Ext Cab 1/2 Ton 2WD
   V = Ext Cab 1/2 Ton 2WD
   W = Ext Cab 1/2 Ton 4WD

5. **Engine Family:**
   C = 5E–FE N = 5VZ–FE
   F = 1MZ–FE P = 3S–FE
   G = 5S–FE R = 1ZZ–FE
   K = 1NZ–FXE T = 2UZ–FE
   L = 2RZ–FE T = 1NZ–FE
   M = 3RZ–FE Y = 2ZZ–GE
   N = 5S–FNE

6. **Series:**
   0 = 100, 200 Series 5 = 50, 150 Series
   1 = 10, 110 Series 6 = 60, 160 Series
   2 = 20, 120 Series 7 = 70, 170 Series
   3 = 30, 130 Series 8 = 80, 180 Series
   4 = 40, 140 Series 9 = 90, 190 Series

7. **Restraint System/Grade:**
   Passenger Vehicle:
   1 = Manual Belt
   2 = Manual Belt w/Airbag
   3 = D Seat: Manual Belt w/Airbag and P Seat: Manual
   8 = Manual Belt w/Airbag and Side Airbag
   Multipurpose Passenger Vehicle/Truck:
   1 = STD 6 = SR5 V6
   2 = DLX 7 = Limited (4Runner)
   3 = LE, XLE 8 = Limited (Tundra)
   4 = SR5 9 = CE, Van
   5 = VX 0 = RAV4

8. **Car Line:**
   B = Avalon R = 4Runner
   C = Sienna T = Celica
   E = Corolla U = Prius
   J = Land Cruiser V = RAV4, RAV4–EV
   K = Camry 0 = MR2
   L = Tercel 1 = Tundra
   N = Tacoma 3 = ECHO
   P = Solara

9. **Check Digit:** Internal use only.
   Used by Toyota & FBI to verify VIN

10. **Model Year:**
    Y = 2000 1 = 2001

11. **Plant Code:**
    0–9 = TMC U = Kentucky
    C = Canada Z = Fremont (CA)
    S = Indiana

12–17. **Serial Number**

CUSTOMER INTERVIEW SHEET

INSTRUCTIONS

The interview should be conducted and the sheet filled out by personnel trained in NVH diagnosis.
Please fill in or check all areas with the appropriate response, enter N/A if it does apply.
The details collected during the interview are critical in successfully resolving the complaint.

CUSTOMER DATA

Name: _____ Date: _____

Telephone #: _____ RO #: _____

VEHICLE DATA

Model/Year: _____ Mileage: _____

VIN #: _____

Is the customer the primary operator of the vehicle? ❍ Yes ❍ No

NVH DATA

What type of condition is the customer experiencing? ❍ Noise ❍ Vibration ❍ Harshness (ride quality)

Is the condition constant? ❍ Constant ❍ Intermittent

When did it start? ❍ While in Service ❍ Since New ❍ Gradually ❍ Suddenly

❍ Other _____

NOISE



Describe the Noise: ❍ Squeak ❍ Rattle ❍ Wind Noise

When does the noise seem to be the loudest or most frequent? _____

_____

Mark the location of the noise on the illustration (reverse side of this form).

VIBRATION



Where is it felt:

❍ Steering Wheel ❍ Floor ❍ Seat ❍ Instrument Panel
❍ Brake Pedal ❍ Console ❍ Accelerator Pedal
❍ Shifter ❍ Body ❍ Mirrors ❍ Clutch Pedal

Describe the vibration:

❍ Vertical ❍ Horizontal ❍ Rotational
❍ Other: _____

HARSHNESS (Ride Quality)



Where do you experience it? _____

When do you experience it? _____

Has the vehicle ever been damaged? ❍ Yes ❍ No If so, please indicate where on the illustration.

Is there any relevent service history? ❍ Yes ❍ No If so, please describe: _____

Has there been any accessory installation? ❍ Yes ❍ No _____

Is the vehicle used for towing or to carry any cargo or equipment? ❍ Yes ❍ No _____

LOCATION INDICATOR

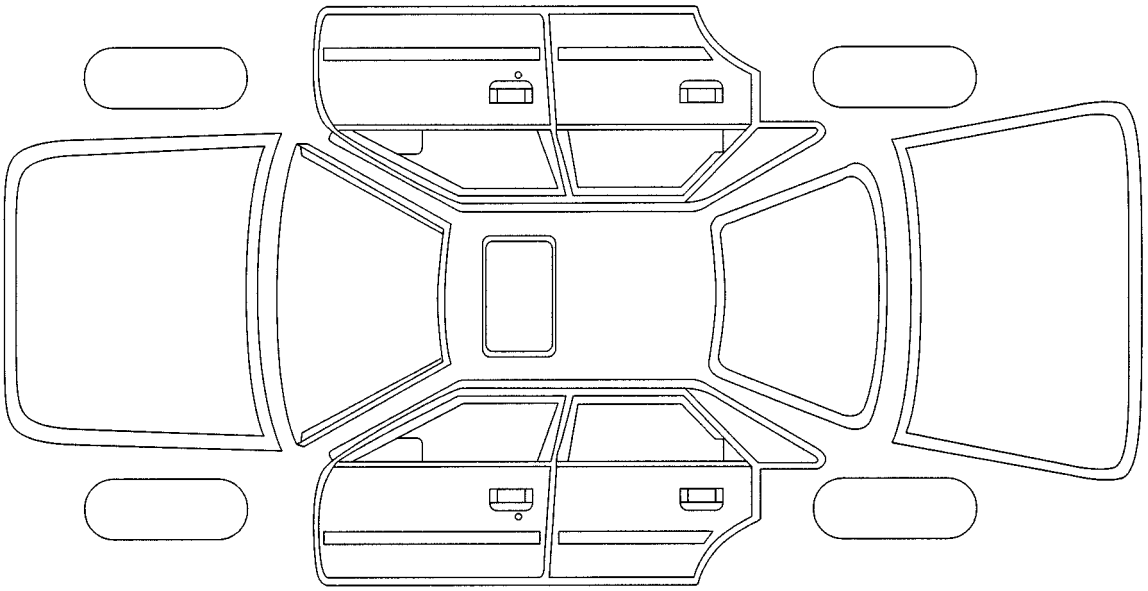

OPERATING CONDITION

When does the condition occur? ❍ Starting ❍ Idling ❍ Cruise ❍ Coasting ❍ Other _____

Vehicle Speed (MPH): _____ Engine Speed (RPM): _____

❍ Cornering Left ❍ Cornering Right ❍ Acceleration ❍ Deceleration

❍ Braking ❍ Clutch Engagement ❍ Other _____

Accessories: ❍ HVAC ❍ 4WD ❍ Audio ❍ Other _____

Engine Temperature: ❍ Cold ❍ Normal ❍ Hot

Road Conditions: ❍ Highway ❍ Suburb ❍ City

Road Surface: ❍ Asphalt ❍ Dirt/Off Road ❍ Concrete with Expansion Joints

❍ Undulating ❍ Other Irregularities

Explain: _____

WEATHER CONDITIONS

Temperature: _____ °F ❍ Clear ❍ Rain ❍ Ice/Snow ❍ Wind

❍ Other _____

ADDITIONAL INFORMATION

_____

_____

_____

_____

Determining the Proper Maintenance Interval

Depending on your circumstances, you should obtain maintenance for your Toyota every 5,000 miles or every 7,500 miles. Follow these guidelines to determine which interval to use.

5,000–Mile Intervals

Use 5,000–mile intervals if you primarily operate your vehicle under any of the following conditions:

- Driving on unpaved or dusty roads.
- Towing a trailer or using a camper or car–top carrier.
- Repeated trips of less than five miles in temperatures below freezing.

7,500–Mile Intervals

Use 7,500–mile intervals if you primarily operate your vehicle under conditions other than those listed above.

Following the Maintenance Log Charts

The Scheduled Maintenance Log identifies the maintenance required at each mileage interval and corresponding time interval based on mileage of 1,250 miles per month. If you drive more than 1,250 miles per month, you should obtain maintenance at the indicated mileage interval rather than the indicated time interval.

If you choose 5,000–mile intervals, follow the maintenance instructions shown below non–shaded headings such as this one:

5,000 Miles or 4 Months

If you choose 7,500–mile intervals, follow the maintenance instructions shown below shaded headings such as this one:

7,500 Miles or 6 Months

At 15,000–mile increments, the 5,000–mile and 7,500–mile intervals coincide. Therefore, shaded and non–shaded headings appear together, as in this example:

15,000 Miles or 12 Months
15,000 Miles or 12 Months

Special Operating Conditions

In addition to standard maintenance items, the Scheduled Maintenance Log indicates services that should be performed on vehicles that are driven under especially demanding conditions. Specific conditions require specific services, as indicated below. The Scheduled Maintenance Log indicates at which mileage/time intervals each service should be performed.

You should perform these additional maintenance services if you drive *primarily* under any of the conditions noted. If you drive only occasionally under these conditions, it is not necessary to perform the additional services.

Driving on Rough, Muddy or Snow–melted roads

- ☐ Rotate tires
- ☐ Inspect ball joints and dust cover
- ☐ Inspect brake linings/drums and brake pads/discs
- ☐ Inspect drive shaft boots
- ☐ Inspect nuts and bolts on chassis and body
- ☐ Inspect steering linkage
- ☐ Re–torque drive shaft bolt*
- ☐ Lubricate propeller shaft and re–torque bolt*

Driving on Salt–Covered Roads

- ☐ Lubricate propeller shaft and re–torque bolt*

Driving on Unpaved or Dusty Roads

- ☐ Inspect brake linings/drums and brake pads/discs
- ☐ Inspect or change engine air filter
- ☐ Lubricate propeller shaft and re–torque bolt*

Extensive Idling or Low–Speed Driving for Long Distances

- ☐ Inspect brake linings/drums and brake pads/discs

* Applies to selected models. See the Scheduled Maintenance Log for details.

Towing a Trailer or Using a Camper or Car–Top Carrier

- ☐ Inspect brake linings/drums and brake pads/discs
- ☐ Inspect nuts and bolts on chassis and body
- ☐ Replace differential oil
- ☐ Replace transmission fluid or oil
- ☐ Replace transfer oil*
- ☐ Lubricate propeller shaft and re–torque bolt*

Off–Road Maintenance

If you own a Land Cruiser or a four–wheel drive RAV4, Tacoma, Tundra or 4Runner, you should check the following items daily whenever you drive off–road through deep sand, mud or water:

- ☐ Brake lines and hoses
- ☐ Brake linings/drums and brake pads/discs
- ☐ Engine air filter
- ☐ Differential oil
- ☐ Steering wheel, linkage and boots
- ☐ Transfer oil
- ☐ Transmission fluid or oil
- ☐ Wheel bearings

For all four–wheel drive vehicles except RAV4, you should also lubricate the propeller shafts daily.

The following descriptions are provided to give you a better understanding of the maintenance items that should be performed on your vehicle. The Scheduled Maintenance Log indicates at which mileage/time intervals each item should be performed. Please note that many maintenance items should be performed only by a qualified technician.

For further information on maintenance items you can perform yourself, see the "Vehicle Maintenance and Care" and "Do–It–Yourself Maintenance" section of your *Owner's Manual.*

Automatic Transmission Fluid or Manual Transmission Oil

Inspect each component for signs of leakage. If you discover any leakage, have it repaired by a qualified technician immediately.

Ball Joints and Dust Covers

Check the suspension and steering linkage ball joints for looseness and damage. Check all dust covers for deterioration and damage. A qualified technician should perform these inspections.

Brake Lines and Hoses

Visually inspect for proper installation. Check for chafing, cracks, deterioration and evidence of leaking. Replace any deteriorated or damaged parts immediately. A qualified technician should perform these operations.

Brake Linings/Drums and Brake Pads/Discs

Check the brake linings(shoes) and drums for scoring, burning, fluid leakage, broken parts and excessive wear. Check the pads for excessive wear and the discs for runout, excessive wear and fluid leakage. A qualified technician should perform these inspections.

Charcoal Canister (CA,MA and NY vehicles)

Check for internal damage and clogging. If necessary, clean with compressed air or replace. A qualified technician should perform these operations.

Differential Oil

Inspect each component for signs of leakage. Ifyou discover any leakage, have it repaired by a qualified technician immediately.

Drive Belts

Inspect forcracks, excessive wearand oiliness. Check the belt ten– and adjust if necessary. Replace the belts if they are damaged.

Drive Shaft Boots

Check the drive shaft boots and clamps for cracks, deteriora– and damage. Replace anydamaged parts and, if necessary, repack the grease. Selected models also require periodic inspec– of the drive shaft bolt for proper torque. A qualified technician should perform these operations.

Engine AirFilter

Check for damage, excessive wear and oiliness. Replace if necessary.

Engine Coolant

Drain and flush the cooling system and refill with an ethylene– ol type coolant. A qualified technician should perf orm this operation.

Engine Oil and Oil Filter

Change the oil filterand replace the engine oil with API SJ, Energy–Conserving II multigrade or ILSAC multigrade oil. For recommended viscosity, refer to your *Owner¿sManual.*

EngineValves

Inspect fore xcessive lifter noise and engine vibration and adjust if necessary. A qualified technician should perform this operation.

Exhaust Pipes and Mountings

Visually inspect the exhaust pipes, muffler and hangers for cracks, deterioration and damage. Start the engine and listen carefully for any exhaust gas leakage. Tighten connections or replace parts as necessary.

Fuel Lines and Connections,Fuel Tank Band and Fuel Tank Vapor Vent System Hoses

Visually inspect for corrosion, damage, cracks and loose or leaking connections. Tighten connections or replace parts as necessary.

Fuel Tank Cap Gasket

Visuallyinspect forcracks, deterioration and damage and replace if necessary.

Nuts and Bolts on Chassis and Body

Re–tighten the seat mounting bolts and front/rear suspension member retaining bolts to specified torque.

Propeller Shaft

Lubricate the propeller shaft spiders and slide yokes with lithium–base chassis grease and the double cardan joint with molybdenum–disulfide lithium–base chassis grease, and re–
; the bolt. Only a qualified technician should re–torque the bolt.

Spark Plugs

Install new plugs of the same type as originally equipped. A qualified technician should perform this operation.

Steering Gear Box

Inspect for signs of leakage. If you discover any leakage, have it repaired immediatelyby a qualified technician.

Steering Wheel,Linkageand Boots

With the vehicle stopped, check for excessive freeplay in the steer–wheel. Inspect the linkage for bending and damage and the dust boots for deterioration, cracks and damage. Replace anydamaged parts. Aqualified technician should perform these operations.

Timing Belt

Replace every90,000 miles. A qualified technician should perform this operation.

Tire Rotation

Tires should be rotated according to the instructions in the *Owner's Manual* When rotating tires, check for damage and uneven wear.

Transfer Case Oil

Inspect each component forsigns of leakage. If you discover any leakage, have it repaired by a qualified technician immediately.

Wheel Bearing and Drive Shaft Bearing Grease

Repack the wheel bearingswith wheel bearing grease and the front drive shaft bearingswith molybdenum–disulfide lithium–chassis grease. Aqualified technician should perform these operations.

FLUID SPECS MY '94 – '05  yota Scion

Vehicle Model	Engine Type	Engine Oil And Year Model				Coolant			Trans.	Automatic Trans.	Transfer Case	Front and Rear Differential
		94–95	96–98	99–02	03–05	ALL 94–98 Ethyl-ene–Glycol Antifreeze	ALL 99–03 Toyota Long Life coolant	ALL 04–05 Toyota Su-per Long Life coolant	API GL–5 75W–90, Castle V160 or Sequential M/T	Dexron III, T–IV or ATF WS (World Stan-dard)	Hypoid API GL–5 75W–90 Dexron III or T–IV	Hypoid API G–5 75W–90, 80W–90 or Synthetic Hypoid API GL–5 75W–140
Avalon	1MZ–FE	5W–30[1] 10W–30[2] 5.0qts	5W–30[1] 10W–30[2] 5.0qts	5W–30[1] 10W–30[2] 5.0qts	5W–30[1] 5.0qts	E 9.8qts	LLC 9.8qts	S–LLC 9.8qts	–	T–IV 3.7qts	–	T–IV 0.9qts
Camry	3MZ–FE	–	–	–	5W–30[1] 5.0qts	–	–	S–LLC 9.8qts	Hypoid API GL–5 75W–90 2.6qts	T–IV 3.7qts	–	–
	1MZ–FE	5W–30[1] 10W–30[2] 5.0qts	5W–30[1] 10W–30[2] 5.0qts	5W–30[1] 10W–30[2] 5.0qts	5W–30[1] 5.0qts	E 9.8qts	LLC 9.8qts	–	Hypoid API GL–5 75W–30 2.6qts	T–IV 3.7qts	–	–
	2AZ–FE	–	–	5W–30[1] 10W–30[2] 4.0qts	5W–30[1] 4.0qts	–	LLC 6.6qts	S–LLC 6.6qts	Hypoid API GL–5 75W–90 2.6qts	T–IV 02– 4.1qts 03–05 3.7qts	Hypoid API GL–5 75W–90 1.0qts	Hypoid API GL–5 75W–90 1.0qts
	5S–FE	5W–30[1] 10W–30[2] 3.8qts	5W–30[1] 10W–30[2] 3.8qts	5W–30[1] 10W–30[2] 3.8qts	–	E 6.3qts	LLC 7.3qts	–	Hypoid API GL–5 75W–90 94–97 2.7qts 98–01 2.3qts	Dexron III 94–95 4.7qts 96–01 2.6qts	–	Dexron III 1.7qts
Celica	7A–FE	5W–30[1] 10W–30[2] 3.9qts	5W–30[1] 10W–30[2] 3.9qts	–	–	E M/T 6.4qts A/T 7.0qts	–	–	API GL–5 75W–90 2.0qts	Dexron III 3.3qts	–	–
Celica	5S–FE	5W–30[1] 10W–30[2] 4.1qts	5W–30[1] 10W–30[2] 4.1qts	5W–30[1] 10W–30[2] 4.1qts	–	E M/T 7.1qts A/T 7.5qts	LLC M/T 7.1qts A/T 7.5qts	–	Hypoid API GL–5 75W–90 94–97 2.7qts 98–99 2.3qts	Dexron III 2.6qts	–	Dexron III 1.7qts
	1ZZ–FE	–	–	5W–30[1] 10W–30[2] 3.9qts	5W–30[1] 3.9qts	–	LLC 6.0qts	S–LLC 6.0qts	API GL–5 75W–90 2.0qts	T–IV 00–03 2.2qts 04 3.1qts	–	–
	2ZZ–FE	–	–	5W–30[1] 10W–30[2] 4.8qts	5W–30[1] 4.8qts	–	LLC 6.2qts	S–LLC 6.2qts	API GL–5 75W–90 2.4qts	T–IV 00–02 4.2qts 03–05 3.7qts	–	–

1: –35 to 50F

2: 0 to 150F

Corolla	4A–FE	5W–30[1] 10W–30[2] 3.2qts	5W–30[1] 10W–30[2] 3.2qts	–	–	E ND Radiator M/T 5.6qts A/T 6.2qts Harrison Radiator 6.3qts	–	–	Hypoid API GL–5 75W–90 94–95 2.7qts 96–97 2.0qts	Dexron III 4–speed 3.3 qts 3–speed 3.3qts	–	Dexron III 3–speed 1.5qts
Corolla	7A–FE	5W–30[1] 10W–30[2] 3.9qts	5W–30 10W–30 3.9qts	–	–	E ND Radiator M/T 5.6qts A/T 6.2qts Harrison Radiator 6.3qts	–	–	API GL–5 75W–90 2.0qts	Dexron III 4–speed 3.3qts 3–speed 2.6qts	–	Dexron III 3–speed 1.5qts
	1ZZ–FE	–	5W–30[1] 10W–30[2] 3.9qts	5W–30[1] 10W–30[2] 3.9qts	5W–30[1] 3.9qts	–	LLC 6.0qts	S–LLC 6.9qts	API GL–5 75W–90 2.0qts	Dexron III 4speed 3.3qts 3speed 2.6 qts	–	Dexron III 3speed only 1.5qts
Echo	1NZ–FE	–	–	5W–30[1] 10W–30[2] 3.9qts	5W–30[1] 3.9qts	–	LLC M/T 4.7qts A/T 4.5qts	S–LLC M/T 4.7qts A/T 4.5qts	API GL–5 75W–90 2.0qts	T–IV 3.1qts	–	–
Highlander	2AZ–FE	–	–	5W–30[1] 10W–30[2] 4.0qts	5W–30[1] 5.0qts	–	LLC 6.8qts	S–LLC w/rear heat 8.1qts w/o rear heat 6.8qts	–	T–IV 01–02 2WD3.5qts 4WD 4.1qts 03–05 3.7qts	Hypoid API GL–5 80W–90 1.0qts	Hypoid API GL–5 80W–90 4WD 1.0qts
	1MZ–FE	–	–	5W–30[1] 10W–30[2] 5.0qts	5W–30[1] 5.0qts	–	LLC 9.9qts	S–LLC w/ rear heat 11.3qts w/o rear heat 9.9qts	–	T–IV 01–02 2WD 3.5qts 4WD 4.1qts 03–05 3.7qts	Hypoid API GL–5 80W–90 1.0qts	Hypoid API GL–5 80W–90 4WD 1.0qts
Highlander	3MZ–FE	–	–	–	5W–30[1] 5.0qts	–	–	S–LLC w/rear heat 11.3qts,12qts w/o rear heat 9.9qts,10.7qts	–	T–IV 3.7qts	Hypoid API GL–5 80W–90 1.0qts	Hypoid API GL–5 80W–90 1.0qts

1: –35 to 50F

2: 0 to 150F

Land Cruiser	1FZ–FE	5W–30[1] 10W–30[2]	5W–30[1] 10W–30[2]	–	–	E 13.2qts w/ rear heat 14.2qts	–	–	–	Dexron III 2.0qts	API GL–5 75W–90 1.8qts	Hypoid API GL–5 75W–90 w/fr lock 2.8qts w/o fr lock 3.0qts rear 3.4qts
		7.8qts	7.8qts									
	2UZ–FE											

1: –35 to 50F

2: 0 to 150F

MR2	3S–GTE	5W–30[1] 10W–30[2] 4.1qts	–	–	–	E 14.4qts	–	–	Hypoid API GL–5 75W–90 w/LSD 4.1qts w/o LSD 4.4qts	Dexron III 3.5qts	–	–
MR2 Spyder	1ZZ–FE	–	–	5W–30[1] 10W–30[2] 3.9qts	5W–30[1] 3.9qts	–	LLC 11.0qts	S–LLC 11.0qts	Hypoid API GL–5 75W–90 Sequential M/T Fluid w/lsd 2.2qts w/o lsd 2.4qts	–	–	–
Matrix	1ZZ–FE	–	–	–	5W–30[1] 3.9qts	–	LLC 6.9qts	S–LLC 6.9qts	Hypoid API GL–5 75W–90 5speed 2.0qts 6speed 2.4qts	T–IV 2WD 3.3qts 4WD 3.1qts	Hypoid API GL–5 75W–90 0.8qts	Hypoid API GL–5 75W–90 0.5qts
	2ZZ–FE	–	–	–	5W–30[1] 4.8qts	–	LLC 7.0qts	S–LLC 7.0qts	Hypoid API GL–5 75W–90 5–speed 2.0qts 6–speed 2.4qts	T–IV 03 4.3qts 04–05 3.2qts	Hypoid API GL–5 85W–90 0.8qts	Hypoid API GL–5 85W–90 0.5qts
Paseo	5E–FE	5W–30[1] 10W–30[2] 3.0qts	5W–30[1] 10W–30[2] 3.0qts	–	–	E M/T 5.3qts A/T 5.7qts	–	–	Hypoid API GL–5 75W–90 94–95 2.5qts 96–97 2.0qts	Dexron III 3.3qts	–	–
Prius	1NZ–FXE	–	–	5W–30[1] 10W–30[2] 3.9qts	5W–30[1] 3.9qts	–	LLC Eng 5.2qts Inv 2.7qts	S–LLC Eng 9.0qts Inv 2.9qts	–	01–03 T–IV 4.9qts 04–05 ATF WS 3.8qts	–	–
RAV4	3S–FE	5W–30[1] 10W–30[2] 4.3qts	5W–30[1] 10W–30[2] 4.3qts	5W–30[1] 10W–30[2] 4.3qts	–	E M/T 8.5qts A/T 8.1qts	LLC M/T 8.5qts A/T 8.1qts	–	Hypoid API GL–5 75W–90 2WD 4.1qts 4WD 5.3qts	Dexron III 3.5qts 4WD type T fluid	API GL–5 75W–90 0.7qts	Hypoid API GL–5 80W–90 1.0qts
	1AZ–FE	–	–	5W–30[1] 10W–30[2] 4.6qts	5W30[1] 4.6qts	–	LLC M/T 6.7qts A/T 6.6qts	–	API GL–5 75W–90 2WD 2.6qts 4WD 3.6qts	T–IV 2WD 3.5qts 4WD4.1qts	Hypoid API GL–5 75W–90 1qt	Hypoid API GL–5 75W–90 1qt

1: –35 to 50F

2: 0 to 150F

	2AZ–FE	–	–	5W–30[1] 10W–30[2] 4.0qts	5W–30[1] 4.0qts	–	LLC 6.3qts	S–LLC 6.6qts	API GL–5 75W–90 2.6qts	T–IV 02– 4.1qts 03–05 3.7qts	Hypoid API GL–5 75W–90 1.0qts	Hypoid API GL–5 75W–90 1.0qts
	EV	–	–	–	–	–	LLC 3.1qts	–	–	Dexron III 1.7qts	–	–
Sequoia	2UZ–FE	–	–	5W–30[1] 10W–30[2] 6.5qts	5W–30[1] 6.5qts	–	LLC w/ rear heat 14.1qts w/o rear heat 12.4qts	S–LLC w/rear heat 14.1qts w/o rear heat 12.4qts	–	01–02 Dex-ron III 2.1qts 03–05 T–IV 2.1qts	API GL–5 75W–90 1.3qts	Front Hypoid API GL–5 75W–90 1.2qts Rear from PD 01/03 Synthetic Hypoid API GL–5 75W–140 3.9qts
Sienna	1MZ–FE	–	5W–30[1] 10W–30[2] 5.0qts	5W–30[1] 10W–30[2] 5.0qts	5W–30[1] 5.0qts	E 11.0qts	LLC 11.0qts	–	–	Dexron III 5.0qts	–	–
	3MZ–FE	–	–	–	5W–30[1] 5.0qts	–	–	S–LLC 12.4qts	–	T–IV 3.8qts	Hypoid API GL–5 80W–90 1.0qts	Hypoid API GL–5 80W–90 1.0qts
Solara	5S–FE	–	–	5W–30[1] 10W–30[2] 3.8qts	5W–30[1] 3.8qts	–	LLC 7.3qts	–	Hypoid API GL–5 75W–90 2.3qts	Dexron III 2.6qts	–	Dexron III 1.7qts
	2AZ–FE	–	–	5W–30[1] 10W–30[2] 4.0qts	5W–30[1] 4.0qts	–	–	S–LLC 7.0qts	API GL–5 75W–90 2WD 2.6qts 4WD 3.6qts	T–IV 02– 4.1qts 03–05 3.7qts	Hypoid API GL–5 75W–90 1.0qts	Hypoid API GL–5 75W–90 1.0qts
	1MZ–FE	–	5W–30[1] 10W–30[2] 5.0qts	5W–30[1] 10W–30[2] 5.0qts	5W–30[1] 5.0qts	E 9.7qts	LLC 9.7qts	–	API GL–5 75W–90 2.6qts	Dexron III 5.0qts	–	–

1: –35 to 50F

2: 0 to 150F

Solara	3MZ–FE	–	–	–	5W–30[1] 5.0qts	–	–	S–LLC 9.8qts	Hypoid API GL–5 75W–90 2.6qts	T–IV 3.7qts	–	–
Supra	2JZ–GE	5W–30[1] 10W–30[2] 5.5qts	5W–30[1] 10W–30[2] 5.5qts	–	–	E A/T 8.8qts M/T 7.7qts	LLC A/T 8.8qts M/T 7.7qts	–	5speed API GL–5 75W–90 2.7qts 6speed Castle V160 1.9qts	Dexron III 1.7qts	–	Hypoid API GL–5 75W–90 1.4qts
Supra Turbo	2JZ–GTE	5W–30[1] 10W–30[2] 5.3qts	5W–30[1] 10W–30[2] 5.3qts	–	–	E 94–96 A/T 9.4qts M/T 9.3qts 97–98 A/T 9.8qts M/T 10qts	–	–	5speed API GL–5 75W–90 2.7qts 6speed Castle V160 1.9qts	Dexron III 1.7qts	–	Hypoid API GL–5 75W–90 1.0qts
T–100	3RZ–FE	5W–30[1] 10W–30[2] 5.8qts	5W–30[1] 10W–30[2] 5.8qts	–	–	E 2WD M/T 9.2qts A/T 9.5qts 4WD M/T 10.6qts A/T 10.8qts	–	–	API GL–5 75W–90 2.7qts	Dexron III 2WD 1.7qts 4WD 2.1qts	Hypoid API GL–5 75W–90 1.2qts	Hypoid API GL–5 75W–90 Front 2.0qts Hypoid API GL–5 80W–90 Rear 2.5qts

1: –35 to 50F

2: 0 to 150F

T–100	3VZ–E	5W–30[1] 10W–30[2] 2WD 5.6qts 4WD 4.8qts	–	–	–	E 10.6qts	–	–	Hypoid API GL–5 75W–90 3.2qts	Dexron III 2WD 1.7qts 4WD 2.1qts	Hypoid API GL–5 75W–90 1.2qts	Hypoid API GL–5 75W–90 Front w/o ADD 1.7qts Hypoid API GL–5 80W–90 Front w/ ADD 2.0qts Rear 2.2qts
	5VZ–FE	5W–30[1] 10W–30[2] 5.5qts	5W–30[1] 10W–30[2] 5.5qts	–	–	E 10.6qts	–	–	Hypoid API GL–5 75W–90 2WD 2.7qts 4WD 2.3qts	Dexron III 2WD 1.7qts 4WD 2.1qts	Hypoid API GL–5 75W–90 1.2qts	Hypoid API GL–5 75W–90 Front 2.0qts Hypoid API GL–5 80W–90 Rear 2WD 2.5qts Rear 4WD 3.1qts
Tacoma	2RZ–FE	5W–30[1] 10W–30[2] 5.8qts	5W–30[1] 10W–30[2] 5.8qts	5W–30[1] 10W–30[2] 5.8qts	5W–30[1] 5.8qts	E A/T 8.2qts M/T 8.5qts	LLC A/T 8.2qts M/T 8.5qts	S–LLC A/T 8.2qts M/T 8.5qts	API GL–5 75W–90 2.7qts	Dexron III 2.5qts	–	Hypoid API GL–5 75W–90 1.4qts
	3RZ–FE	5W–30[1] 10W–30[2] 5.7qts	5W–30[1] 10W–30[2] 5.7qts	5W–30[1] 10W–30[2] 5.7qts	5W–30[1] 5.7qts	E 8.8qts	LLC 8.8qts	–	API GL–5 75W–90 2.6qts	95–02 Dex- ron III 2.6qts 03–05 T–IV 2.6qts	Hypoid API GL–5 75W–90 1.1qts	Hypoid API GL–5 75W–90 Front 1.2qts Hypoid API GL–5 80W–90 Rear SWB 2.8qts LWB w/lock 3.1qts w/o lock 2.2qts
	5VZ–FE	5W–30[1] 10W–30[2] 2WD 5.7qts 4WD 5.5qts	5W–30[1] 10W–30[2] 2WD 5.7qts 4WD 5.5qts	5W–30[1] 10W–30[2] 2WD 5.7qts 4WD 5.5qts	5W–30[1] 5.5qts	E 10.5qts	LLC 10.5qts	S–LLC 10.5qts	Hypoid API GL–5 75W–90 2WD 2.7qts 4WD 2.3qts	95–02 Dex- ron III 03–05 T–IV 2WD 1.7qts 4WD 2.1qts	Hypoid API GL–5 75W–90 1.1qts	Hypoid API GL–5 75W–90 Front 1.2qts Hypoid API GL–5 80W–90 Rear SWB 2.8qts LWB w/lock 3.1qts w/o lock 2.6qts
Tercel	3E–E	5W–30[1] 10W–30[2] 2.9qts	–	–	–	E 5.7qts	–	–	API GL–5 75W–90 2.5qts	Dexron II 2.6qts	–	–
	5E–FE	5W–30[1] 10W–30[2] 3.0qts	5W–30[1] 10W–30[2] 3.0qts	–	–	E M/T 5.3qts A/T 5.7qts	–	–	Hypoid API GL–5 75W–90 95 2.5qts 96–98 2.0qts	Dexron III 3–speed 2.5qts 4–speed 3.3qts	–	Dexron III 3–speed trans 1.5qts
Truck (not T100)	22R–E	5W–30[1] 10W–30[2] 4.5qts	–	–	–	E 2WD 8.9qts 4WD M/T 8.9qts A/T 9.6qts	–	–	API GL–5 75W–90 2Wd 2.5qts 4WD 4.1qts	Dexron III 2WD 2.5qts 4WD 2.1qts	Hypoid API GL–5 75W–90 1.2qts	Hypoid API GL–5 75W–90 Front w/ADD 2.0qts w/o ADD 1.7qts Rear 2WD 1.9qts 4WD 2.3qts

1: –35 to 50F

2: 0 to 150F

	3VZ–E	5W–30[1] 10W–30[2] 2WD 4.5qts 4WD 4.8qts	–	–	–	E 10.6qts	–	–	Hypoid API GL–5 75W–90 3.2qts	Dexron III 4.8qts	Hypoid API GL–5 75W–90 M/T 1.2qts Dexron III A/T 0.8qts	Hypoid API GL–5 75W–90 Front w/o ADD 1.7qts Hypoid API GL–5 80W–90 Front w/ ADD 2.0 qts Rear 2.3qts
Tundra	5VZ–FE	–	–	5W–30[1] 10W–30[2] 5.5qts	5W–30[1] 5.5qts[2]	–	LLC 10.5qts	S–LLC 10.5qts	Hypoid API GL–5 75W–90 2WD 2.7qts 4WD 2.3qts	00–02 Dexron III 03–05 T–IV 2.1qts	Hypoid API GL–5 75W–90 1.1qts	Hypoid API GL–5 75W–90 Front 1.2qts Hypoid API GL–5 75W–140 Rear 2WD 4.0qts w/LSD 3.3qts Rear 4WD 3.7qts w/LSD 3.1qts
Tundra	2UZ–FE	–	–	5W–30[1] 10W–30[2] 6.5qts	5W–30[1] 6.5qts	–	LLC 12.3qts	S–LLC 12.3qts	–	00–02 Dexron III 2.1qts 03–05 T–IV 2.1qts	API GL–5 75W–90 1.1qts	Front Hypoid API GL–5 75W–90 1.2qts Rear Hypoid API GL–5 75W–140 w/LSD 80W–90 2WD 4.0qts 4WD 3.7qts LSD 2WD 3.3qts 4WD 3.1qts
4Runner	22R–E	5W–30[1] 10W–30[2] 4.5qts	–	–	–	E M/T 8.9qts A/T 9.6qts	–	–	API GL–5 75W–90 4.1qts	Dexron III 2WD 1.7qts 4WD 2.1qts	Hypoid API GL–5 75W–90 1.2qts	Hypoid API GL–5 75W–90 Front w/ADD 2.0qts w/o ADD 1.7qts Rear 2WD 1.9qts 4WD 2.3qts
	3RZ–FE	5W–30[1] 10W–30[2] 5.7qts	5W–30[1] 10W–30[2] 5.7qts	5W–30[1] 10W–30[2] 5.7qts	5W–30[1] 5.7qts	E w/ rear heat 11.6qts w/o rear heat 10.6qts	LLC w/ rear heat 11.6qts w/o rear heat 10.6qts	–	API GL–5 75W30 2.7qts	Dexron III 2WD 1.7qts 4WD 2.1qts	Hypoid API GL–5 75W–90 1.1qts	Hypoid API GL–5 75W–90 Front 1.2qts Hypoid API GL–5 80W–90 Rear 2WD 2.9qts 4WD w/rear lock 2.9qts w/o rear lock 2.6qts

1: –35 to 50F

2: 0 to 150F

	3VZ–E	5W–30[1] 10W–30[2] 4.8qts	–	–	–	E 10.6qts	–	–	Hypoid API GL–5 75W–90 M/T 1.2qts Dexron III A/T 0.8qts	Dexron III 4.8qts	Hypoid API GL–5 75W–90 3.2qts	Hypoid API GL–5 75W–90 Front w/o ADD 1.7qts Hypoid API GL–5 80W–90 Front w/ ADD 2.0 qts Rear 2.3qts
4Runner	5VZ–FE	5W–30[1] 10W–30[2] 5.5qts	5W–30[1] 10W–30[2] 5.5qts	5W–30[1] 10W–30[2] 5.5qts	5W–30[1] 5.5qts	E w/ rear heat 9.5qts w/o rear heat 8.5qts	LLC w/ rear heat 9.5qts w/o rear heat 8.5qts	–	Hypoid API GL–5 75W–90 2.3qts	Dexron III 2WD 1.7qts 4WD 2.1qts	Hypoid API GL–5 75W–90 1.1qts	Hypoid API GL–5 75W–90 Front 1.2qts Hypoid API GL–5 80W–90 Rear SWB 2.8qts LWB w/lock 3.1qts w/o lock 2.6qts
	1GR–FE	–	–	–	5W–30[1] 5.5qts	–	LLC 10.4qts	S–LLC 10.4qts	–	T–IV 2.1qts	Hypoid API GL–5 75W–90 1.5 qts	Hypoid API GL–5 75W–90 Front 1.5 qts Rear 3.2 qts
	2UZ–FE	–	–	–	5W–30[1] 6.5qts	–	LLC 13.0qts	S–LLC 13.0qts	–	T–IV 3.2qts	Hypoid API GL–5 75W–90 1.5 qts	Hypoid API GL–5 75W–90 Front 1.5 qts Rear 3.2 qts
Scion xA	1NZ–FE	–	–	–	5W–30[1] 3.9qts	–	LLC M/T 4.7qts A/T 4.5qts	LLC M/T 4.7qts A/T 4.5qts	API GL–5 75W–90 2.0qts	T–IV 3.1qts	–	–
Scion xB	1NZ–FE	–	–	–	5W–30[1] 3.9qts	–	LLC M/T 4.7qts A/T 4.5qts	LLC M/T 4.7qts A/T 4.5qts	API GL–5 75W–90 2.0qts	T–IV 3.1qts	–	–

1: –35 to 50F

2: 0 to 150F

Fluid Part Number Reference Chart

Part Name	Part #
Toyota Genuine Motor oil 5W–30	00279–1QT5W
Toyota Genuine Motor oil 10W–30	00279–1QT30
Ethylene–Glycol Antifreeze	Good brand of ethylene–glycol based antifreeze
Toyota Long Life Coolant	00272–1LLAC
Toyota Super Long Life Coolant	00272–SLLC2
Hypoid API GL–5 75W–90 Gear Lube	08885–80306
Hypoid API GL–5 80W–90 Gear Lube	Good brand of 80W–90 gear lube
Castle V160 Gear Lube	08885–01306
Sequential Manual Transmission Fluid	08886–02206
T–IV Transmission Fluid	08886–81015
ATF WS Transmission Fluid	08886–81015 (20L) 08886–02305 (4L)
Type T Transmission Fluid	08886–00405
Dexron III Transmission Fluid	00718–ATF00
Synthetic Hypoid API GL–5 75W–140 Gear Lube	00289–75140
Limited Slip Gear Oil	Good brand of limited slip gear oil

1: –35 to 50F

2: 0 to 150F

Maintenance Log. SUVs & Trucks

5,000–Mile Maintenance Intervals
7,500–Mile Maintenance Intervals

To determine the appropriate maintenance interval for your vehicle, see page 17.

5,000 Miles or 4 Months

Replace engine oil and oil filter

Additional Maintenance Items for Special Operating Conditions:*

Inspect the following:

__ Ball joints and dust covers
__ Brake linings/drums and brake pads/discs
__ Drive shaft boots
__ Engine air filter
__ Nuts and bolts on chassis and body
__ Steering wheel, linkage and boots

Rotate tires
Lubricate propeller shaft and re–torque bolt (all 4WD except RAV4)
Re–torque drive shaft bolt (4WD RAV4)

DEALER SERVICE VERIFICATION

Date: _____

Mileage: _____

10,000 Miles or 8 Months

Replace engine oil and oil filter

Additional Maintenance Items for Special Operating Conditions:*

Inspect the following:

__ Ball joints and dust covers
__ Brake linings/drums and brake pads/discs
__ Drive shaft boots
__ Engine air filter
__ Nuts and bolts on chassis and body
__ Steering wheel, linkage and boots

Rotate tires
Lubricate propeller shaft and re–torque bolt (all 4WD except RAV4)
Re–torque drive shaft bolt (4WD RAV4)

DEALER SERVICE VERIFICATION

Date: _____

Mileage: _____

7,500 Miles or 6 Months

Replace engine oil and oil filter

Rotate tires

DEALER SERVICE VERIFICATION

Date: _____

Mileage: _____

* Specific services apply to specific operating conditions.See pages 18–19 for details.

Maintenance Log. SUVs & Trucks

15,000 Miles or 12 Months

15,000 Miles or 12 Months

Replace engine oil and oil filter

Rotate tires

Lubricate propeller shaft (all 4WD except RAV4)

Re–torque drive shaft bolt (4WD RAV4))

Re–torque propeller shaft bolt (all models except RAV4)

Inspect the following:

__ Automatic transmission fluid (T undra)
__ Ball joints and dust covers
__ Brake lines and hoses
__ Brake linings/drums and brake pads/discs
__ Drive shaft boots (all 4WD models and 2WD RAV4)
__ Exhaust pipes and mountings
__ Front differential oil (all 4WD except RAV4)
__ Limited–slip differential oil (Land Cruiser, 4WD RAV4) [1]
__ Rear differential oil (all models except 2WD RAV4)
__ Steering gear box
__ Steering wheel, linkage and boots

Additional Maintenance Items for Special Operating Conditions:*

Inspect automatic transmission fluid (Land Cruiser , RAV4, Tacoma, 4Runner)

Inspect engine air filter

Inspect front differential oil (2WD and 4WD RAV4)

Inspect nuts and bolts on chassis and body

Replace automatic transmission fluid (T undra)

Replace front differential oil (all 4WD except RAV4)

Replace rear differential oil (including limited–slip)

DEALER SERVICE VERIFICATION

Date: _____

Mileage: _____

TOYOTA
GENUINE PARTS

[1] If vehicle is equipped with limited–slip differential.

Maintenance Log. SUVs & Trucks

5,000–Mile Maintenance Intervals

7,500–Mile Maintenance Intervals

To determine the appropriate maintenance interval for your vehicle, see page 17.

20,000 Miles or 16 Months

Replace engine oil and oil filter

Additional Maintenance Items for Special Operating Conditions:*

Inspect the following:

__ Ball joints and dust covers
__ Brake linings/drums and brake pads/discs
__ Drive shaft boots
__ Engine air filter
__ Nuts and bolts on chassis and body
__ Steering wheel, linkage and boots

Rotate tires

Lubricate propeller shaft and re–torque bolt (all 4WD except RAV4)

Re–torque drive shaft bolt (4WD RAV4)

DEALER SERVICE VERIFICATION

Date: _____

Mileage: _____

25,000 Miles or 20 Months

Replace engine oil and oil filter

Additional Maintenance Items for Special Operating Conditions:*

Inspect the following:

__ Ball joints and dust covers
__ Brake linings/drums and brake pads/discs
__ Drive shaft boots
__ Engine air filter
__ Nuts and bolts on chassis and body
__ Steering wheel, linkage and boots

Rotate tires

Lubricate propeller shaft and re–torque bolt (all 4WD except RAV4)

Re–torque drive shaft bolt (4WD RAV4)

DEALER SERVICE VERIFICATION

Date: _____

Mileage: _____

22,500 Miles or 18 Months

Replace engine oil and oil filter

Rotate tires

DEALER SERVICE VERIFICATION

Date: _____

Mileage: _____

* Specific services apply to specific operating conditions.See pages 18–19 for details.

Maintenance Log. SUVs & Trucks

30,000 Miles or 24 Months

30,000 Miles or 24 Months

Replace engine air filter
Replace engine coolant
Replace limited–slip differential oil (Land Cruiser) [1]
Replace non–platinum spark plugs (Tacoma, Tundra, 4Runner) [2]
Lubricate propeller shaft (all 4WD except RAV4)
Lubricate wheel bearings (Tacoma 2WD)
Lubricate wheel bearings and drive shaft bearings (Land Cruiser)
Re–torque drive shaft bolt (4WD RAV4)
Re–torque propeller shaft bolt (all models except RAV4)
Replace engine oil and oil filter
Rotate tires

Inspect the following:

___ Ball joints and dust covers
___ Brake lines and hoses
___ Brake linings/drums and brake pads/discs
___ Drive shaft boots (all 4WD models and 2WD RAV4)
___ Exhaust pipes and mountings
___ Front differential oil
___ Fuel lines and connections, fuel tank band and fuel tank vapor vent system hoses
___ Fuel tank cap gasket
___ Limited–slip differential oil (4WD RAV4) [1]
___ Rear differential oil (all models except 2WD RAV4)
___ Steering gear box
___ Steering wheel, linkage and boots
___ Transfer case oil (4WD models)
___ Transmission fluid or oil

Additional Maintenance Items for Special Operating Conditions:*

Inspect nuts and bolts on chassis and body
Replace front differential oil (2WD RAV4 and all 4WD)
Replace rear differential oil (including limited–slip)
Replace transmission fluid or oil

DEALER SERVICE VERIFICATION

Date: _____

Mileage: _____

TOYOTA
QUALITY SERVICE

[1] If vehicle is equipped with limited–slip differential.
[2] Required under the terms of the Emission Control Warranty

Maintenance Log. SUVs & Trucks

5,000–Mile Maintenance Intervals

7,500–Mile Maintenance Intervals

To determine the appropriate maintenance interval for your vehicle, see page 17.

35,000 Miles or 28 Months

Replace engine oil and oil filter

Additional Maintenance Items for Special Operating Conditions:*

Inspect the following:

__ Ball joints and dust covers
__ Brake linings/drums and brake pads/discs
__ Drive shaft boots
__ Engine air filter
__ Nuts and bolts on chassis and body
__ Steering wheel, linkage and boots

Rotate tires

Lubricate propeller shaft and re–torque bolt (all 4WD except RAV4)

Re–torque drive shaft bolt (4WD RAV4)

DEALER SERVICE VERIFICATION

Date: _____

Mileage: _____

40,000 Miles or 32 Months

Replace engine oil and oil filter

Additional Maintenance Items for Special Operating Conditions:*

Inspect the following:

__ Ball joints and dust covers
__ Brake linings/drums and brake pads/discs
__ Drive shaft boots
__ Engine air filter
__ Nuts and bolts on chassis and body
__ Steering wheel, linkage and boots

Rotate tires

Lubricate propeller shaft and re–torque bolt (all 4WD except RAV4)

Re–torque drive shaft bolt (4WD RAV4)

DEALER SERVICE VERIFICATION

Date: _____

Mileage: _____

37,500 Miles or 30 Months

Replace engine oil and oil filter

Rotate tires

DEALER SERVICE VERIFICATION

Date: _____

Mileage: _____

* Specific services apply to specific operating conditions.See pages 18–19 for details.

Maintenance Log. SUVs & Trucks

45,000 Miles or 36 Months

45,000 Miles or 36 Months

Replace engine oil and oil filter

Rotate tires

Lubricate propeller shaft (all 4WD except RAV4)

Re–torque drive shaft bolt (4WD RAV4))

Re–torque propeller shaft bolt (all models except RAV4)

Inspect the following:

__ Automatic transmission fluid (T undra)
__ Ball joints and dust covers
__ Brake lines and hoses
__ Brake linings/drums and brake pads/discs
__ Drive shaft boots (all 4WD models and 2WD RAV4)
__ Exhaust pipes and mountings
__ Front differential oil (all 4WD except RAV4)
__ Limited–slip differential oil [1] (Land Cruiser, 4WD RAV4)
__ Rear differential oil (all models except 2WD RAV4)
__ Steering gear box
__ Steering wheel, linkage and boots

Additional Maintenance Items for Special Operating Conditions:*

Inspect automatic transmission fluid (Land Cruiser , RAV4, Tacoma, 4Runner)

Inspect engine air filter

Inspect front differential oil (2WD and 4WD RAV4)

Inspect nuts and bolts on chassis and body

Replace automatic transmission fluid (Tundra)

Replace front differential oil (all 4WD except RAV4)

Replace rear differential oil (including limited–slip)

DEALER SERVICE VERIFICATION

Date: _____

Mileage: _____

[1] If vehicle is equipped with limited–slip differential.

Maintenance Log. SUVs & Trucks

5,000–Mile Maintenance Intervals

7,500–Mile Maintenance Intervals

To determine the appropriate maintenance interval for your vehicle, see page 17.

50,000 Miles or 40 Months

Replace engine oil and oil filter

Additional Maintenance Items for Special Operating Conditions:*

Inspect the following:

__ Ball joints and dust covers
__ Brake linings/drums and brake pads/discs
__ Drive shaft boots
__ Engine air filter
__ Nuts and bolts on chassis and body
__ Steering wheel, linkage and boots

Rotate tires

Lubricate propeller shaft and re–torque bolt (all 4WD except RAV4)

Re–torque drive shaft bolt (4WD RAV4)

DEALER SERVICE VERIFICATION

Date: _____

Mileage: _____

55,000 Miles or 44 Months

Replace engine oil and oil filter

Additional Maintenance Items for Special Operating Conditions:*

Inspect the following:

__ Ball joints and dust covers
__ Brake linings/drums and brake pads/discs
__ Drive shaft boots
__ Engine air filter
__ Nuts and bolts on chassis and body
__ Steering wheel, linkage and boots

Rotate tires

Lubricate propeller shaft and re–torque bolt (all 4WD except RAV4)

Re–torque drive shaft bolt (4WD RAV4)

DEALER SERVICE VERIFICATION

Date: _____

Mileage: _____

52,500 Miles or 42 Months

Replace engine oil and oil filter

Rotate tires

DEALER SERVICE VERIFICATION

Date:

Mileage:

* Specific services apply to specific operating conditions. See pages 18–19 for details.

Maintenance Log. SUVs & Trucks

60,000 Miles or 48 Months

60,000 Miles or 48 Months

Replace engine air filter
Replace engine coolant
Replace engine oil and oil filter
Rotate tires
Replace limited–slip differential oil (Land Cruiser , RAV4) [1]
Replace platinum spark plugs (RAV4) [2]
Replace non–platinum spark plugs (Tacoma, Tundra, 4Runner) [2]
Lubricate propeller shaft (all 4WD except RAV4)
Lubricate wheel bearings (Tacoma 2WD)
Lubricate wheel bearings and drive shaft bearings (Land Cruiser)
Re–torque drive shaft bolt (4WD RAV4)
Re–torque propeller shaft bolt (all models except RAV4)
Inspect the following:

__ Ball joints and dust covers
__ Brake lines and hoses
__ Brake linings/drums and brake pads/discs [3]
__ Charcoal canister [4]
__ Drive belts
__ Drive shaft boots (all 4WD models and 2WD RAV4)
__ Engine valve clearance
__ Fuel lines and connections, fuel tank band and fuel tank vapor vent system hoses
__ Exhaust pipes and mountings
__ Front differential oil
__ Fuel tank cap gasket
__ Rear differential oil (all models except 2WD RAV4)
__ Steering gear box
__ Steering wheel, linkage and boots
__ Transfer case oil (4WD models)
__ Transmission fluid or oil

Additional Maintenance Items for Special Operating Conditions:*

Inspect nuts and bolts on chassis and body
Replace front differential oil (2WD RAV4 and all 4WD)
Replace rear differential oil (including limited–slip)
Replace transmission fluid or oil

DEALER SERVICE VERIFICATION

Date: _____

Mileage: _____

TOYOTA EXPRESS LUBE

[1] If vehicle is equipped with limited–slip differential.

[2] Required under the terms of the Emission Control Warranty.

[3] Inspect at 60,000 miles or 72 months, whichever comes first. Required only for vehicles in California, Massachusetts and New York.

[4] Initial inspection at 60,000 miles. Inspect every 15,000 miles thereafter.

Maintenance Log. SUVs & Trucks

5,000–Mile Maintenance Intervals

7,500–Mile Maintenance Intervals

To determine the appropriate maintenance interval for your vehicle, see page 17.

65,000 Miles or 52 Months

Replace engine oil and oil filter

Additional Maintenance Items for Special Operating Conditions:*

Inspect the following:

__ Ball joints and dust covers
__ Brake linings/drums and brake pads/discs
__ Drive shaft boots
__ Engine air filter
__ Nuts and bolts on chassis and body
__ Steering wheel, linkage and boots

Rotate tires

Lubricate propeller shaft and re–torque bolt (all 4WD except RAV4)

Re–torque drive shaft bolt (4WD RAV4)

DEALER SERVICE VERIFICATION

Date: _____

Mileage: _____

70,000 Miles or 56 Months

Replace engine oil and oil filter

Additional Maintenance Items for Special Operating Conditions:*

Inspect the following:

__ Ball joints and dust covers
__ Brake linings/drums and brake pads/discs
__ Drive shaft boots
__ Engine air filter
__ Nuts and bolts on chassis and body
__ Steering wheel, linkage and boots

Rotate tires

Lubricate propeller shaft and re–torque bolt (all 4WD except RAV4)

Re–torque drive shaft bolt (4WD RAV4)

DEALER SERVICE VERIFICATION

Date: _____

Mileage: _____

67,500 Miles or 54 Months

Replace engine oil and oil filter

Rotate tires

DEALER SERVICE VERIFICATION

Date: _____

Mileage: _____

* Specific services apply to specific operating conditions.See pages 18–19 for details.

Maintenance Log. SUVs & Trucks

75,000 Miles or 60 Months

75,000 Miles or 60 Months

Replace engine oil and oil filter Rotate tires

Lubricate propeller shaft (all 4WD except RAV4)

Re–torque drive shaft bolt (4WD RAV4))

Re–torque propeller shaft bolt (all models except RAV4)

Inspect the following:

__ Automatic transmission fluid (T undra)
__ Ball joints and dust covers
__ Brake lines and hoses
__ Brake linings/drums and brake pads/discs
__ Drive belts
__ Drive shaft boots (all 4WD models and 2WD RAV4)
__ Exhaust pipes and mountings
__ Front differential oil (all 4WD except RAV4)
__ Limited–slip differential oil [1] (Land Cruiser, 4WD RAV4)
__ Rear differential oil (all models except 2WD RAV4)
__ Steering gear box
__ Steering wheel, linkage and boots

Additional Maintenance Items for Special Operating Conditions:*

Inspect automatic transmission fluid (Land Cruiser , RAV4, Tacoma, 4Runner)

Inspect engine air filter

Inspect front differential oil (2WD and 4WD RAV4)

Inspect nuts and bolts on chassis and body

Replace automatic transmission fluid (T undra)

Replace front differential oil (all 4WD except RAV4)

Replace rear differential oil (including limited–slip)

DEALER SERVICE VERIFICATION

Date: _____

Mileage: _____

TOYOTA
GENUINE PARTS

[1] If vehicle is equipped with limited–slip differential.

Maintenance Log. SUVs & Trucks

5,000–Mile Maintenance Intervals

7,500–Mile Maintenance Intervals

To determine the appropriate maintenance interval for your vehicle, see page 17.

80,000 Miles or 64 Months

Replace engine oil and oil filter

Additional Maintenance Items for Special Operating Conditions:*

Inspect the following:

__ Ball joints and dust covers
__ Brake linings/drums and brake pads/discs
__ Drive shaft boots
__ Engine air filter
__ Nuts and bolts on chassis and body
__ Steering wheel, linkage and boots

Rotate tires

Lubricate propeller shaft and re–torque bolt (all 4WD except RAV4)

Re–torque drive shaft bolt (4WD RAV4)

DEALER SERVICE VERIFICATION

Date: _____

Mileage: _____

85,000 Miles or 68 Months

Replace engine oil and oil filter

Additional Maintenance Items for Special Operating Conditions:*

Inspect the following:

__ Ball joints and dust covers
__ Brake linings/drums and brake pads/discs
__ Drive shaft boots
__ Engine air filter
__ Nuts and bolts on chassis and body
__ Steering wheel, linkage and boots

Rotate tires

Lubricate propeller shaft and re–torque bolt (all 4WD except RAV4)

Re–torque drive shaft bolt (4WD RAV4)

DEALER SERVICE VERIFICATION

Date: _____

Mileage: _____

82,500 Miles or 66 Months

Replace engine oil and oil filter

Rotate tires

DEALER SERVICE VERIFICATION

Date: _____

Mileage: _____

* Specific services apply to specific operating conditions.See pages 18–19 for details.

Maintenance Log. SUVs & Trucks

90,000 Miles or 72 Months

90,000 Miles or 72 Months

Replace engine air filter
Replace engine coolant
Replace engine oil and oil filter
Rotate tires
Replace limited–slip differential oil (Land Cruiser) [1]
Replace non–platinum spark plugs (Tundra, Tacoma, 4Runner) [2]
Replace timing belt (except 4–cyl. Tacoma and 4Runner)
Lubricate propeller shaft (all 4WD except RAV4)
Lubricate wheel bearings (Tacoma 2WD)
Lubricate wheel bearings and drive shaft bearings (Land Cruiser)
Re–torque drive shaft bolt (4WD RAV4)
Re–torque propeller shaft bolt (all models except RAV4)
Inspect the following:

___ Ball joints and dust covers
___ Brake lines and hoses
___ Brake linings/drums and brake pads/discs
___ Drive belts
___ Drive shaft boots (all 4WD models and 2WD RAV4)
___ Exhaust pipes and mountings
___ Fuel lines and connections, fuel tank band and fuel tank vapor vent system hoses
___ Front differential oil
___ Fuel tank cap gasket
___ Limited–slip differential oil (4WD RAV4) [1]
___ Rear differential oil (all models except 2WD RAV4)
___ Steering gear box
___ Steering wheel, linkage and boots
___ Transfer case oil (4WD models)
___ Transmission fluid or oil

Additional Maintenance Items for Special Operating Conditions:*

Inspect nuts and bolts on chassis and body
Replace front differential oil (2WD RAV4 and all 4WD)
Replace rear differential oil (including limited–slip)
Replace transmission fluid or oil

DEALER SERVICE VERIFICATION

Date: _____

Mileage: _____

TOYOTA

QUALITY SERVICE

[1] If vehicle is equipped with limited–slip differential.

[2] Required under the terms of the Emission Control Warranty

Maintenance Log. SUVs & Trucks

5,000–Mile Maintenance Intervals

7,500–Mile Maintenance Intervals

To determine the appropriate maintenance interval for your vehicle, see page 17.

95,000 Miles or 76 Months

Replace engine oil and oil filter

Additional Maintenance Items for Special Operating Conditions:*

Inspect the following:

__ Ball joints and dust covers
__ Brake linings/drums and brake pads/discs
__ Drive shaft boots
__ Engine air filter
__ Nuts and bolts on chassis and body
__ Steering wheel, linkage and boots

Rotate tires

Lubricate propeller shaft and re–torque bolt (all 4WD except RAV4)

Re–torque drive shaft bolt (4WD RAV4)

DEALER SERVICE VERIFICATION

Date: _____

Mileage: _____

100,000 Miles or 80 Months

Replace engine oil and oil filter

Additional Maintenance Items for Special Operating Conditions:*

Inspect the following:

__ Ball joints and dust covers
__ Brake linings/drums and brake pads/discs
__ Drive shaft boots
__ Engine air filter
__ Nuts and bolts on chassis and body
__ Steering wheel, linkage and boots

Rotate tires

Lubricate propeller shaft and re–torque bolt (all 4WD except RAV4)

Re–torque drive shaft bolt (4WD RAV4)

DEALER SERVICE VERIFICATION

Date: _____

Mileage: _____

97,500 Miles or 78 Months

Replace engine oil and oil filter

Rotate tires

DEALER SERVICE VERIFICATION

Date: _____

Mileage: _____

* Specific services apply to specific operating conditions. See pages 18–19 for details.

Maintenance Log. SUVs & Trucks

105,000 Miles or 84 Months

105,000 Miles or 84 Months

Replace engine oil and oil filter

Rotate tires

Lubricate propeller shaft (all 4WD except RAV4)

Re–torque drive shaft bolt (4WD RAV4))

Re–torque propeller shaft bolt (all models except RAV4)

Inspect the following:

__ Automatic transmission fluid (T undra)
__ Ball joints and dust covers
__ Brake lines and hoses
__ Brake linings/drums and brake pads/discs
__ Drive belts
__ Drive shaft boots (all 4WD models and 2WD RAV4)
__ Exhaust pipes and mounting s
__ Front differential oil (all 4WD except RAV4)
__ Limited–slip differential oil [1] (Land Cruiser, 4WD RAV4)
__ Rear differential oil (all models except 2WD RAV4)
__ Steering gear box
__ Steering wheel, linkage and boots

Additional Maintenance Items for Special Operating Conditions:*

Inspect automatic transmission fluid (Land Cruiser , RAV4, Tacoma, 4Runner)

Inspect engine air filter

Inspect front differential oil (2WD and 4WD RAV4)

Inspect nuts and bolts on chassis and body

Replace automatic transmission fluid (T undra)

Replace front differential oil (all 4WD except RAV4)

Replace rear differential oil (including limited–slip)

DEALER SERVICE VERIFICATION

Date: _____

Mileage: _____

[1] If vehicle is equipped with limited–slip differential.

Maintenance Log. SUVs & Trucks

5,000–Mile Maintenance Intervals

7,500–Mile Maintenance Intervals

To determine the appropriate maintenance interval for your vehicle, see page 17.

110,000 Miles or 88 Months

Replace engine oil and oil filter

Additional Maintenance Items for Special Operating Conditions:*

Inspect the following:

__ Ball joints and dust covers
__ Brake linings/drums and brake pads/discs
__ Drive shaft boots
__ Engine air filter
__ Nuts and bolts on chassis and body
__ Steering wheel, linkage and boots

Rotate tires

Lubricate propeller shaft and re–torque bolt (all 4WD except RAV4)

Re–torque drive shaft bolt (4WD RAV4)

DEALER SERVICE VERIFICATION

Date: _____

Mileage: _____

115,000 Miles or 92 Months

Replace engine oil and oil filter

Additional Maintenance Items for Special Operating Conditions:*

Inspect the following:

__ Ball joints and dust covers
__ Brake linings/drums and brake pads/discs
__ Drive shaft boots
__ Engine air filter
__ Nuts and bolts on chassis and body
__ Steering wheel, linkage and boots

Rotate tires

Lubricate propeller shaft and re–torque bolt (all 4WD except RAV4)

Re–torque drive shaft bolt (4WD RAV4)

DEALER SERVICE VERIFICATION

Date: _____

Mileage: _____

112,500 Miles or 90 Months

Replace engine oil and oil filter

Rotate tires

DEALER SERVICE VERIFICATION

Date: _____

Mileage: _____

* Specific services apply to specific operating conditions.See pages 18–19 for details.

Maintenance Log. SUVs & Trucks

120,000 Miles or 96 Months

120,000 Miles or 96 Months

Replace engine air filter
Replace engine coolant
Replace engine oil and oil filter
Rotate tires
Replace limited–slip differential oil (Land Cruiser , RAV4) [1]
Replace spark plugs (all models) [2]
Lubricate propeller shaft (all 4WD except RAV4)
Lubricate wheel bearings (T acoma 2WD)
Lubricate wheel bearings and drive shaft bearings (Land Cruiser)
Re–torque drive shaft bolt (4WD RAV4)
Re–torque propeller shaft bolt (all models except RAV4)
Inspect the following:

__ Ball joints and dust covers
__ Brake lines and hoses
__ Brake linings/drums and brake pads/discs [3]
__ Charcoal canister
__ Drive belts
__ Drive shaft boots (all 4WD models and 2WD RAV4)
__ Engine valve clearance
__ Exhaust pipes and mountings
__ Front differential oil
__ Fuel lines and connections, fuel tank band and fuel tank vapor vent system hoses
__ Fuel tank cap gasket
__ Rear differential oil (all models except 2WD RAV4)
__ Steering gear box
__ Steering wheel, linkage and boots
__ Transfer case oil (4WD models)
__ Transmission fluid or oil

Additional Maintenance Items for Special Operating Conditions:*

Inspect nuts and bolts on chassis and body
Replace front differential oil (2WD RAV4 and all 4WD)
Replace rear differential oil (including limited–slip)
Replace transmission fluid or oil

DEALER SERVICE VERIFICATION

Date: _____

Mileage: _____



[1] If vehicle is equipped with limited–slip differential.

[2] Required under the terms of the Emission Control Warranty

[3] Inspect at 120,000 miles or 144 months, whichever comes first. Required only for vehicles in California, Massachusetts and New York.

VI. CONVERTER BOX INSTALLATION (REGULAR CAB)

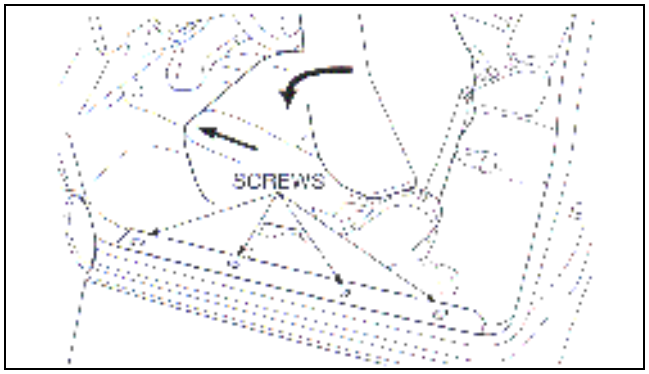

1. INSTALLATION OF NEW CONVERTER BOX

(a) Remove the left scuff plate by removing the four screws.

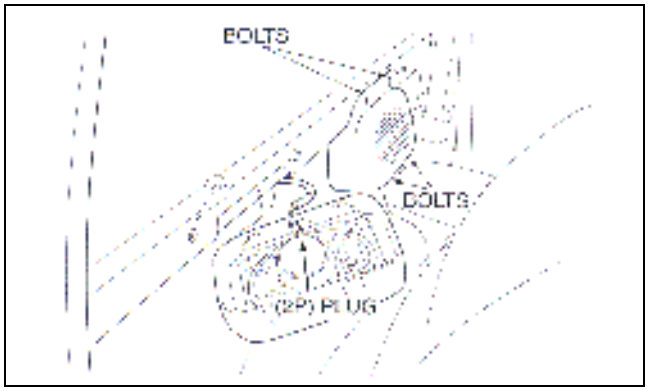

(b) Remove the rear speakers (if equipped)
(1) Remove the four bolts from each speaker.
(2) Disconnect the connector from each speaker.

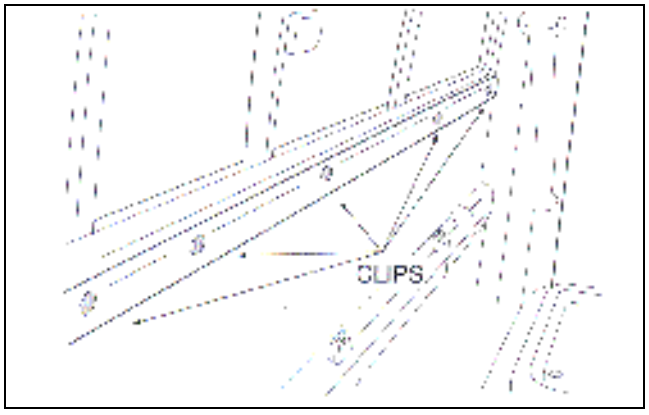

(c) Remove the lower rear window trim (if equipped).
(1) Remove the lower rear window trim by releasing the five clips using a nylon pry tool.

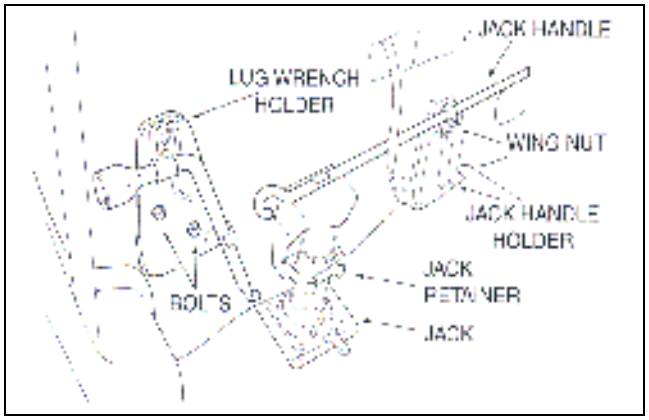

(d) Remove the rear cab wall trim panel (if equipped).
(1) Remove the two bolts from the lug wrench holder.
(2) Loosen the wing nut and remove the jack handle.
(3) Remove the jack retainer and remove the jack.

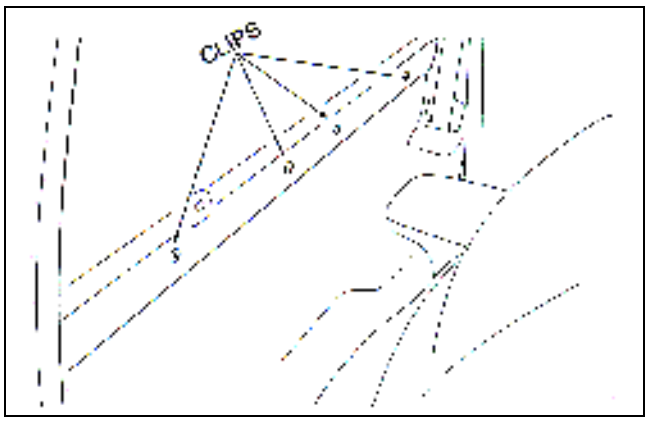

(e) Remove the rear wall trim panel and grommet.
(1) Remove the four retaining clips and remove the trim panel.

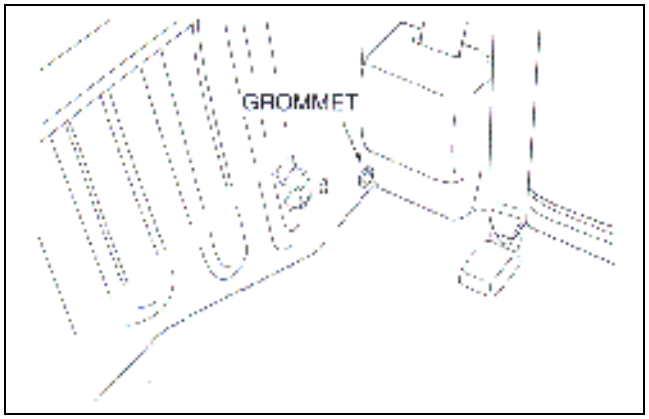

(2) Remove the grommet in the lower left corner.

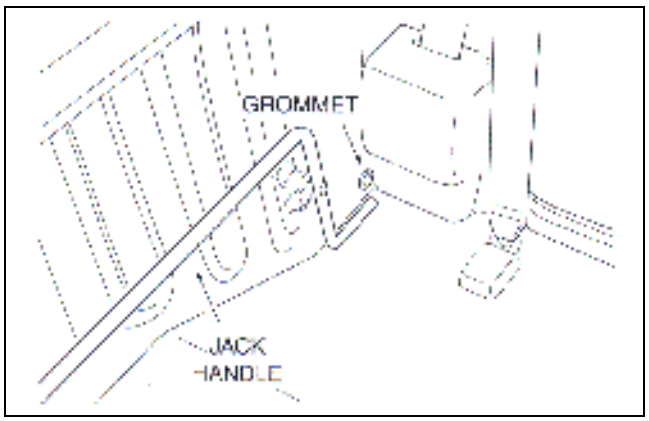

(f) Remove jack handle (**vehicles without rear wall trim panel**).
(1) Remove the wing nut and remove the jack handle.
(2) Remove the grommet in the lower left corner.

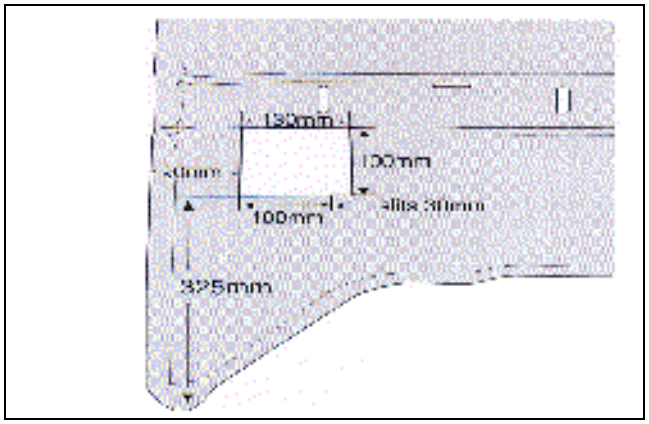

(g) Modify the rear wall trim panel (if equipped).
(1) Cut out area as shown.

NOTE:
Panel is shown from the backside.

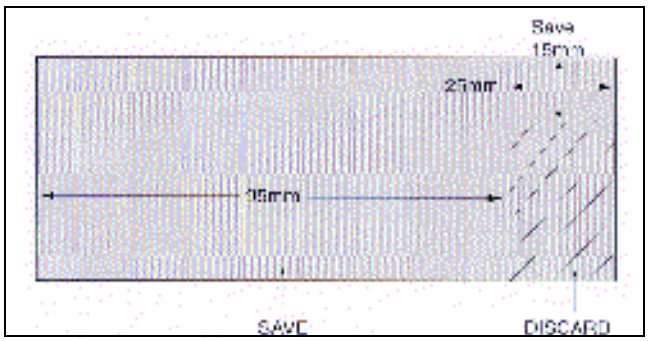

(2) Cut packing tape as shown.

NOTE:

Do not cut the 80mm x 60mm piece of tape.

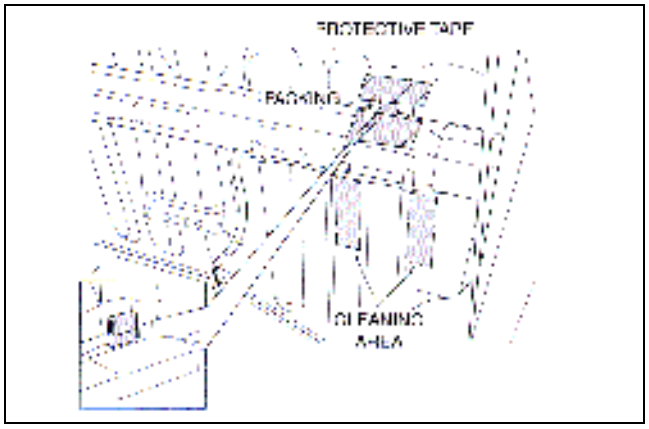

(h) Surface preparation.

(1) Clean surface in the area shown using a prep-solvent.

(2) Attach a 25mm x 15mm piece of packing to the rear of the cab wall as shown.

(3) Temporarily apply cloth tape to protect the vehicle¿sfinish as shown.

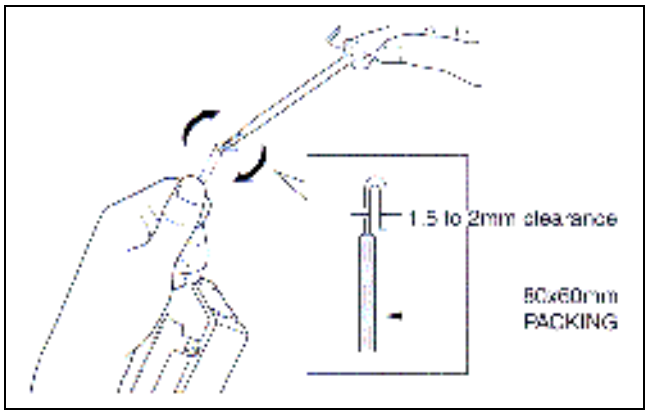

(i) Bend the converter box mounting bracket.

(1) Bend the top of the bracket as shown.

NOTE:

There should be a 1.5 ¿ 2.0 mm gap on the bracket after bending.

(2) Install the 80mm x 60mm packing around the mounting bracket as shown.

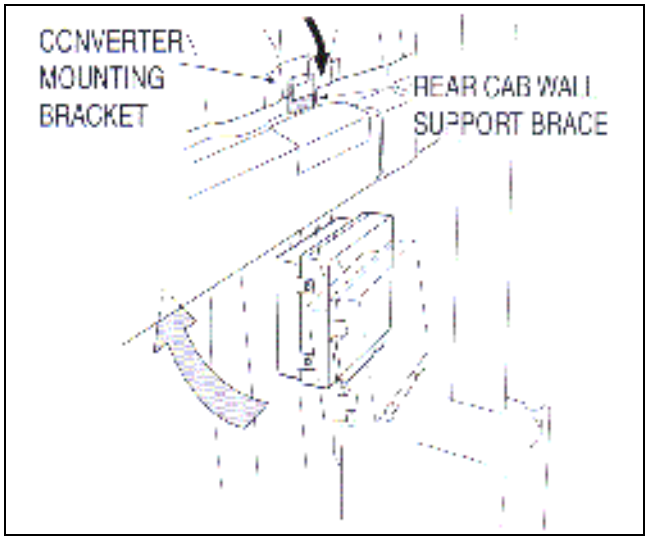

(j) Mount the converter box.

(1) Carefully slid the converter-mounting bracket between the rear cab wall ribs.

(2) Hook the bent portion of the bracket onto the cab wall support brace.

NOTE:

Ensure that the converter bracket is fully seated on to the cab wall support.

(3) Remove the protective paper from the converter box.

(4) Firmly press the converter box to the rear cab wall.

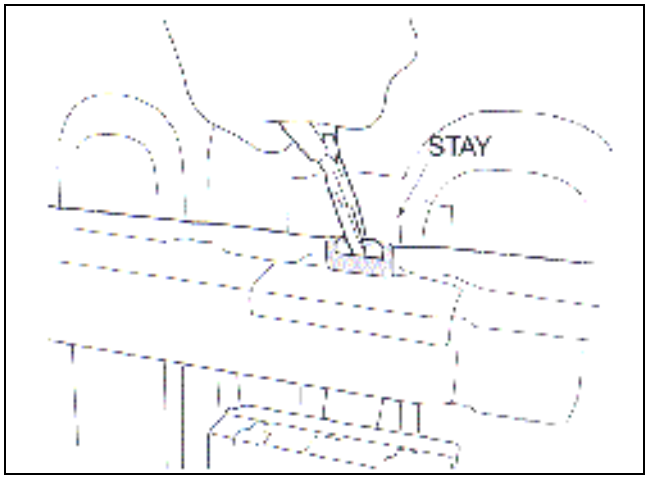

(5) Tighten the mounting bracket to the rear cab wall as shown.

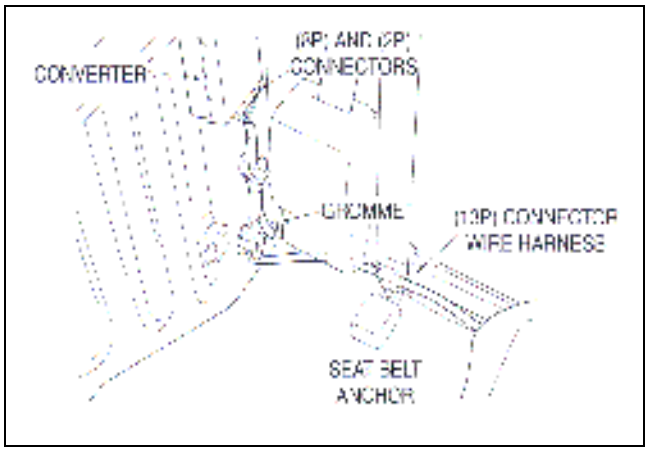

(k) Install the converter box harness.
(1) Connect the 8-Pin and 2-Pin connectors of the converter box harness to the converter box.
(2) Route the gray 4-Pin connector though the hole in the rear of the cab wall.
(3) Install the grommet into the rear cab wall.
(4) Route the 13-Pin connector harness forward between the seat belt anchor and the B-Pillar.

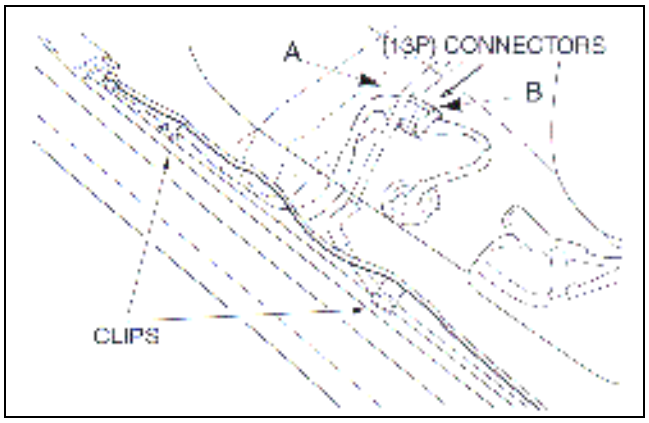

(5) Release the carpet clips.
(6) Unplug the 13-Pin connector located underneath the front driver's seat.

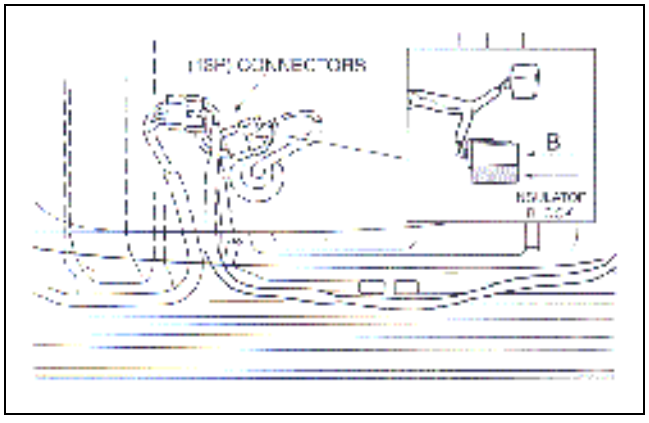

(7) Install the insulator block to the bottom of the 13-Pin male connector of the converter box harness.
(8) Connect the two 13-Pin converter box harness connectors to the vehicle harness.
(9) Route the converter box harness along the vehicle's harness.
(10) Secure the insulator block to the floor of the cab as shown.

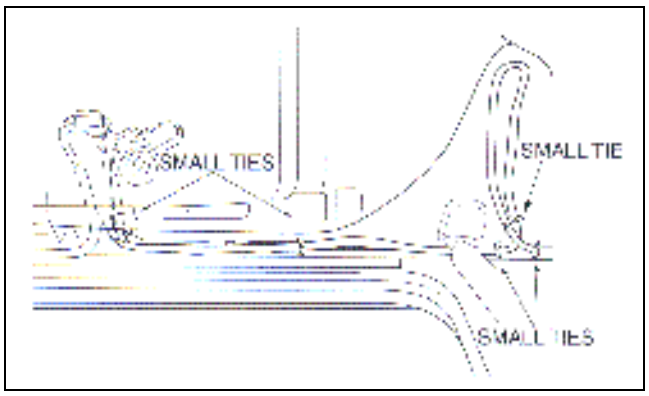

(10) Secure the converter box harness to the vehicle harness using the 5 tie-wraps as shown.

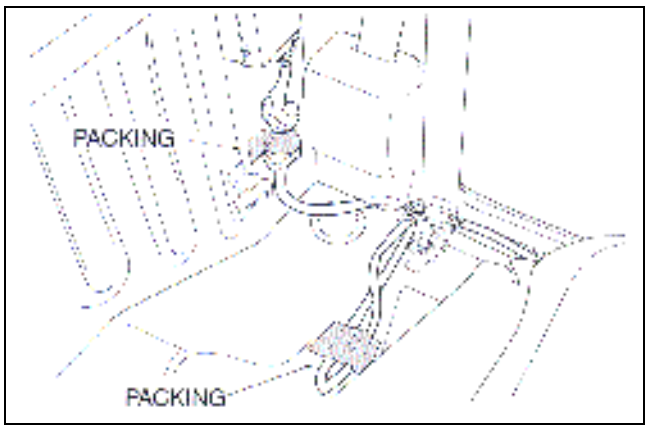

(11) Secure the fuse section of the converter box harness to the rear cab wall as shown using the packing tape.

(12) Loop and secure any excess wire using the packing tape as shown.

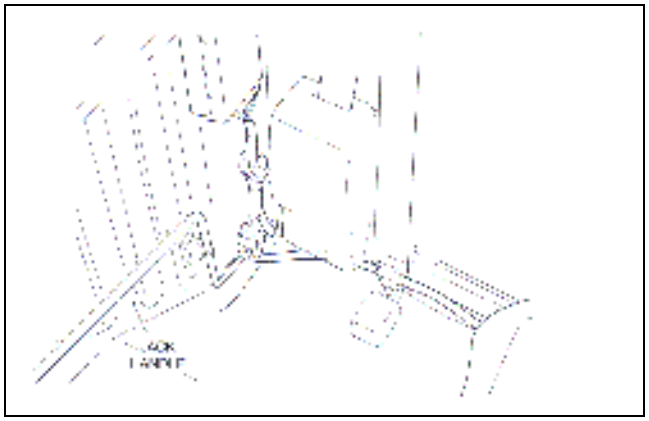

1. REASSEMBLE THE INTERIOR

(a) Reinstall the jack handle (vehicles without rear wall trim panel).

(b) Reinstall the jack handle and tighten the wing nut.

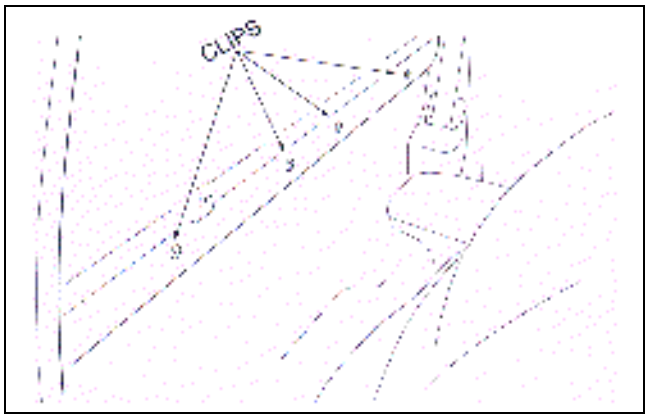

(a) Reinstall the rear cab wall trim panel (if equipped).

(1) Reinstall the rear cab wall trim panel and engage the 4 clips.

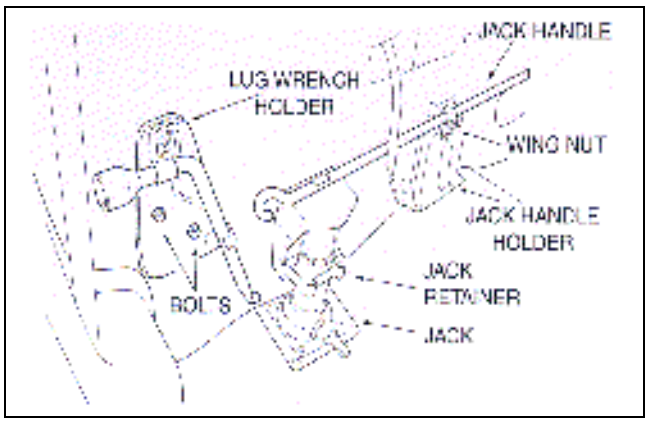

(d) Reinstall the jack and the jack retainer.
(a) Reinstall the lug wrench holder using the two bolts.
(b) Reinstall the jack handle and tighten the wing nut.

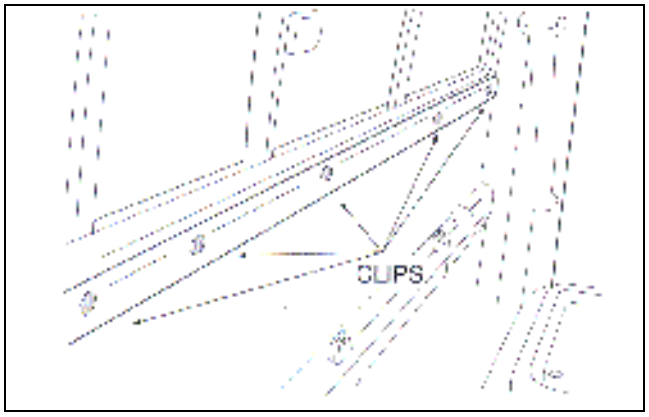

(c) Reinstall the lower rear window trim (if equipped).
    (1) Reinstall the lower rear window trim by engaging the five clips.

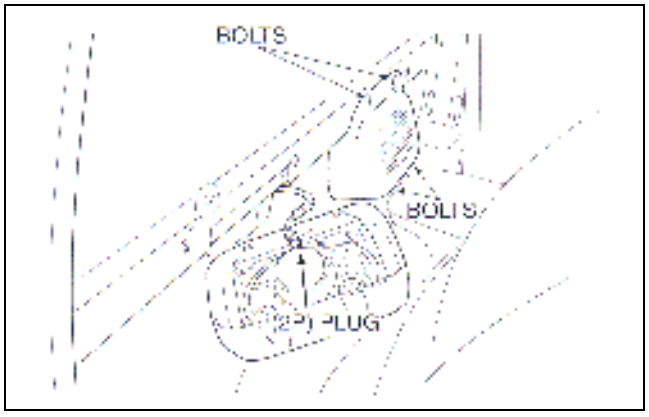

(g) Reinstall the rear speakers (if equipped)
    (1) Reconnect each speaker.
    (2) Reinstall the four bolts for each speaker.

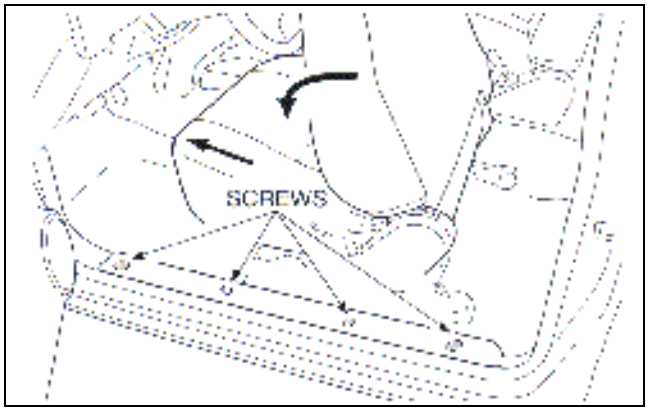

(h) Reinstall the carpet clips.
(i) Reinstall the left scuff plate using the four screws.
(j) Proceed to **Section VIII**.

VII. CONVERTER BOX INSTALLATION (EXTRA CAB)

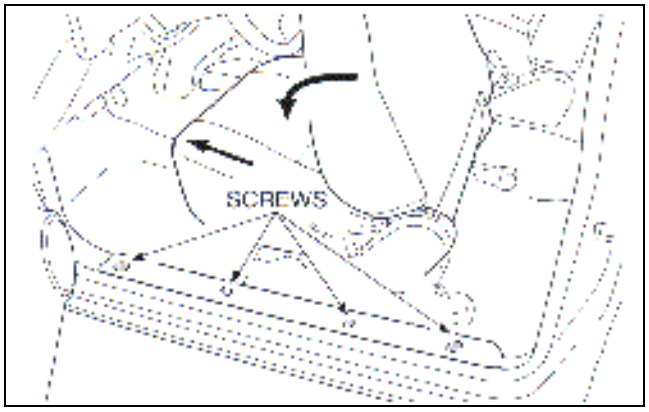

1. INSTALLATION OF NEW CONVERTER BOX

(a) Remove the left scuff plate by removing the four screws.

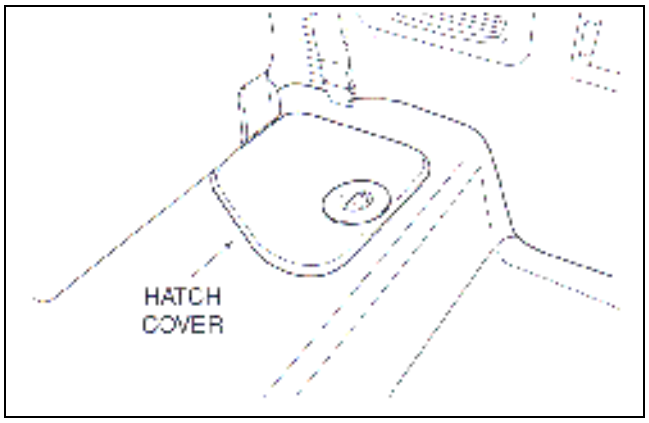

(b) Remove the jack cover.

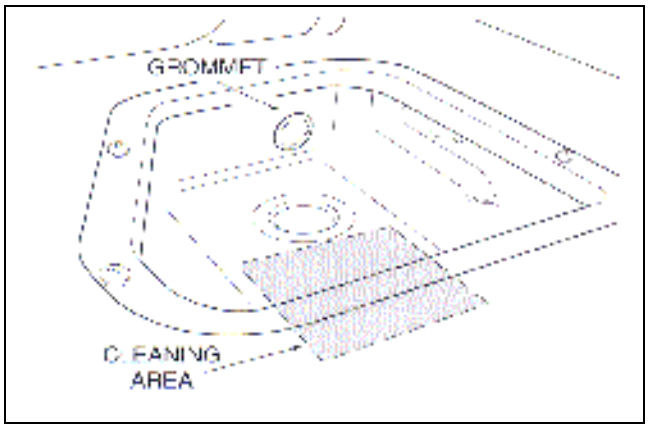

(c) Remove the grommet on the rear cab wall.
(d) Loosen the jack and re-secure the jack by hand.
(e) Clean area shown with a prep-solvent.

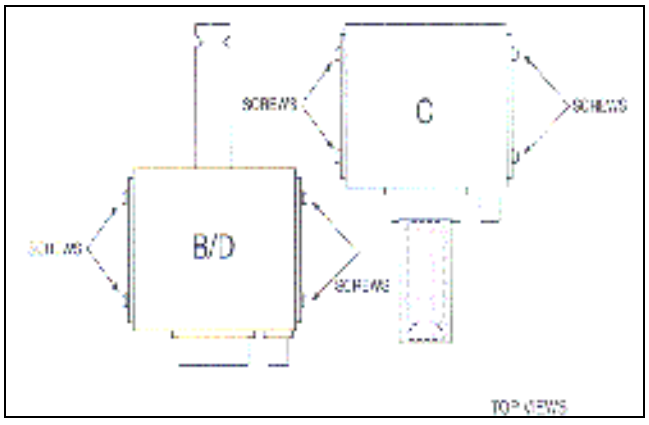

(f) Install the new converter box.
  (1) Remove the four screws holding the converter box to the bracket.
  (2) Rotate the converter box 180° and reinstall the four screws.
  (3) Install the 80mm x 60mm packing around the mounting bracket as shown.

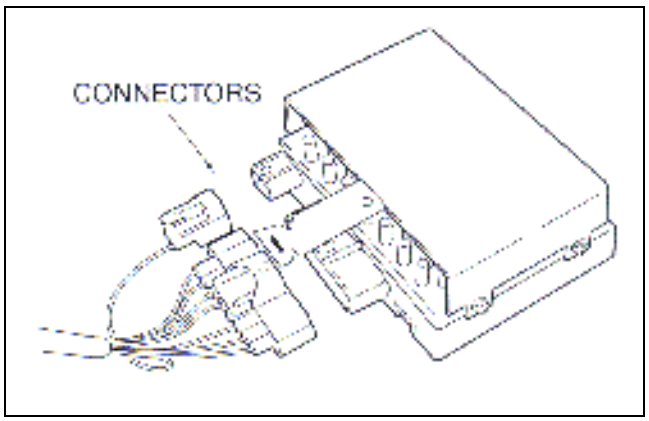

(4) Connect the 8-Pin and 2-Pin connectors of the converter box harness to the converter box.

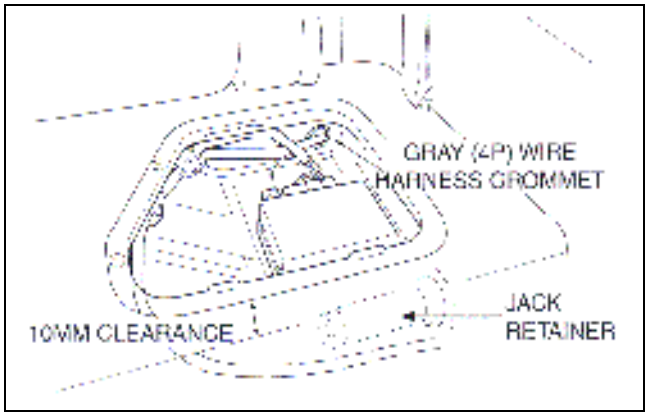

(5) Route the gray 4-Pin connector though the hole in the rear of the cab wall along with the grommet.

(1) Remove the protective paper from the converter box.

(7) Allowing 10mm of clearance between the jack retainer and the converter box firmly press the converter box onto the floor of the cab as shown.

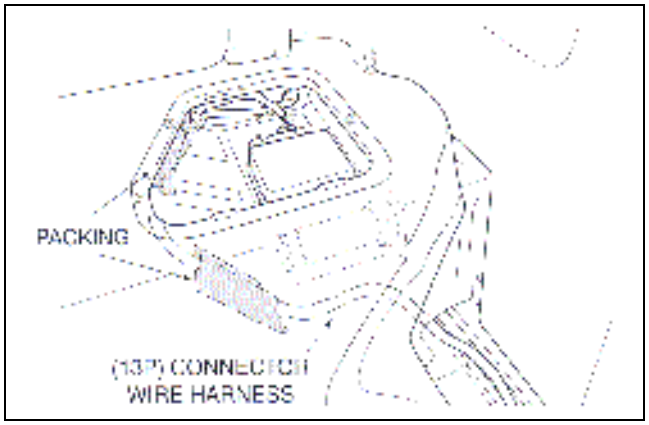

(8) Route the 13-Pin connector and secure with packing tape as shown.

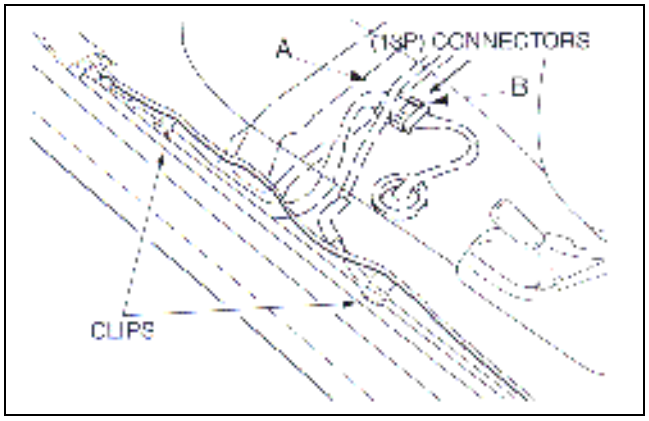

(9) Detach the carpet clips.

(10) Unplug the 13-Pin connector located underneath the front seat.

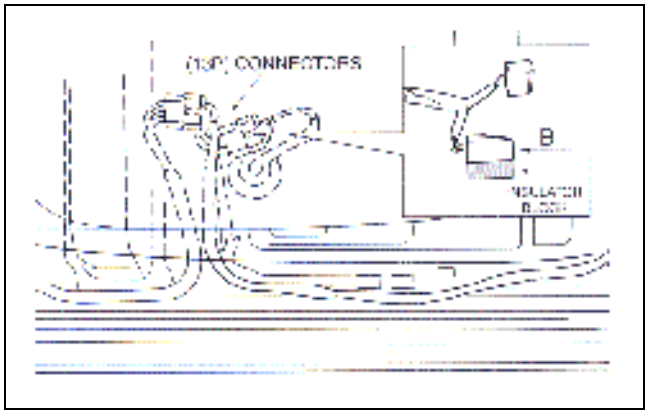

(11) Install the insulator block to the bottom of the 13-Pin male connector of the converter box harness.
(12) Connect the two 13-Pin converter box harness connectors to the vehicle harness.
(13) Route the converter box harness along the vehicle harness.
(14) Secure the insulator block to the floor of the cab as shown.

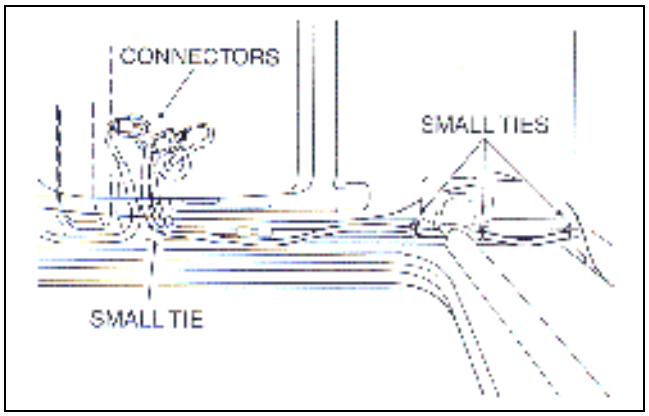

(15) Secure the converter box harness to the vehicle harness using the 4 tie-wraps as shown.

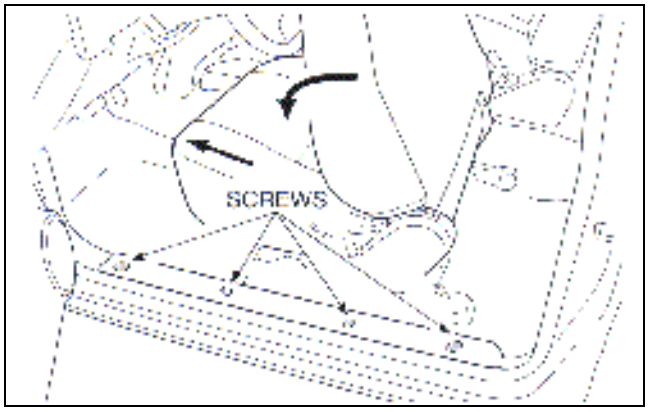

1. REASSEMBLE OF THE INTERIOR

(a) Reinstall the jack cover.
(b) Reattach the carpet clips.
(c) Reinstall the left scuff plate using the four screws.
(d) Proceed to **Section VIII**.

V. REMOVE EXISTING TRAILER TOWING WIRE HARNESS CONVERTER (ALL VEHICLES)

1. INSPECT VEHICLE

(a) Inspect vehicle as outlined in **Section IV** to ensure that vehicle is equipped with a Toyota trailer towing wire harness converter.

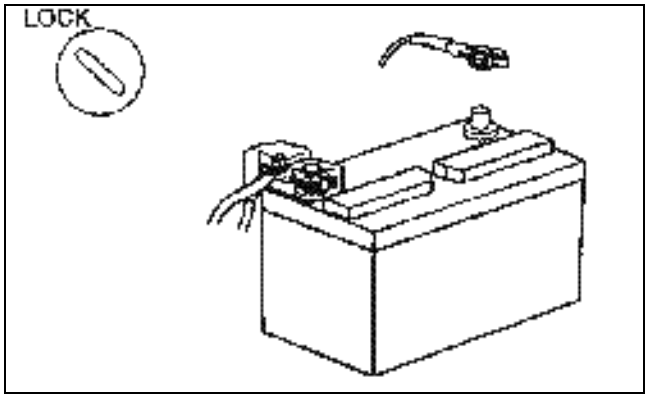

2. DISCONNECT THE BATTERY

(a) Record radio station presets.

(b) Disconnect the negative (-) battery cable.

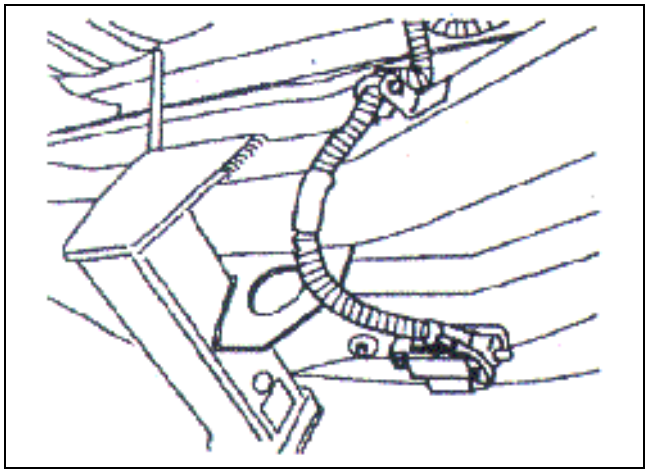

3. REMOVE THE ORIGINAL CONVERTER AND TRAILER HITCH WIRING HARNESS

(a) Unbolt the original flat four connector from the trailer hitch.

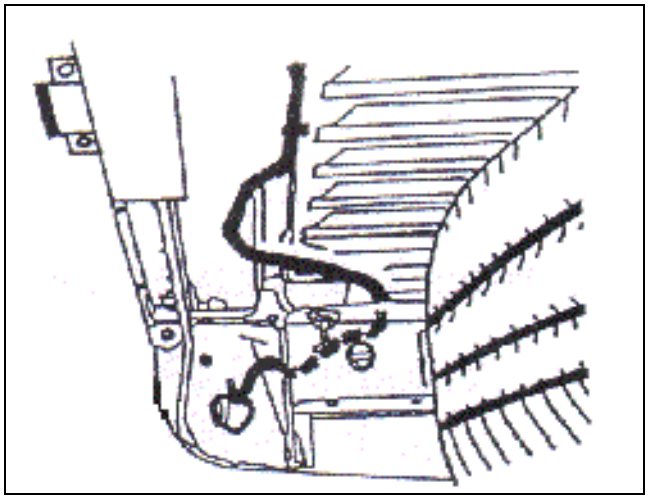

(b) Remove the ground connection from underneath the body on the left side.

(c) Remove any tie-wraps holding the converter wiring harness to the vehicle.

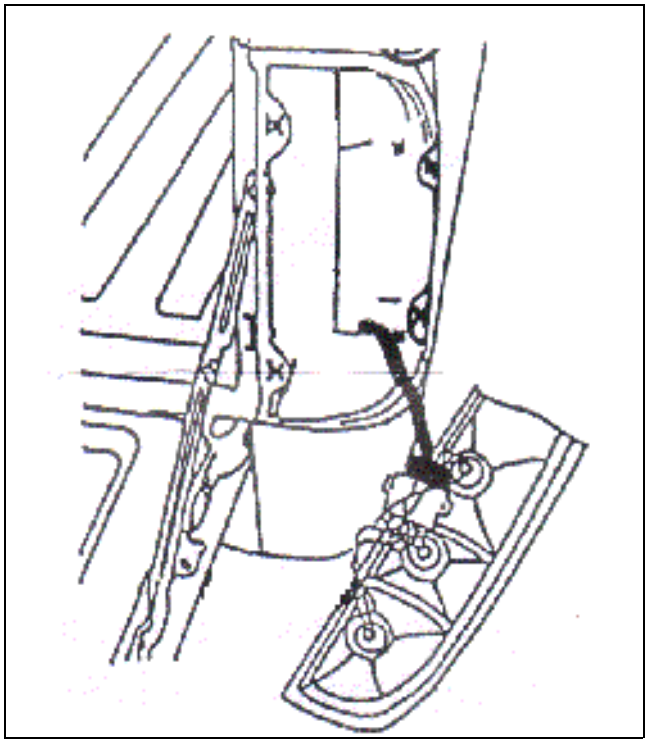

4. REMOVE BOTH TAILLIGHT ASSEMBLIES

(a) Lower tail gate.

(b) Remove the four mounting screws from both taillight assemblies.

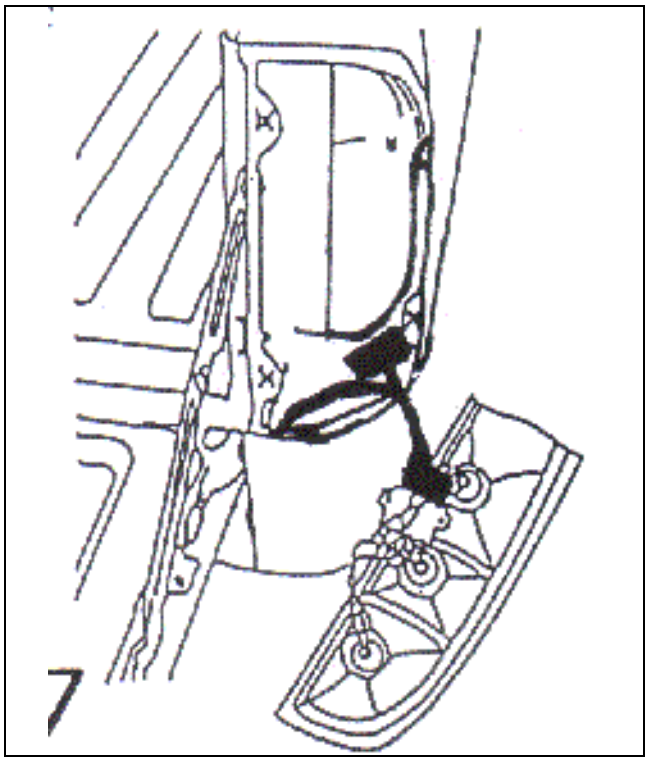

(c) Carefully remove both taillight assemblies.

(d) Disconnect the taillight wire harness at the connector and set the assembly aside.

(e) Disconnect the jumper connector assembly from both taillight harnesses.

NOTE:

- **Do not allow the taillight assemblies to hang against the body by the wire harness.**
- **Use caution when disconnecting the taillight wire harness connectors.**
- **Take care not to drop the taillight assemblies.**

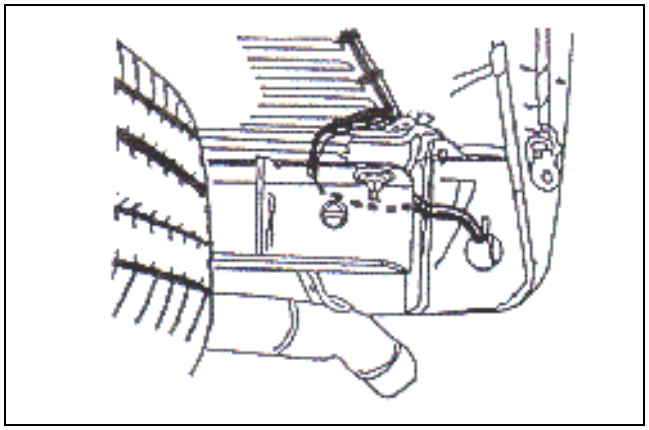

(f) Remove any foam or tie-wraps holding the converter harnesses to the taillight harnesses.

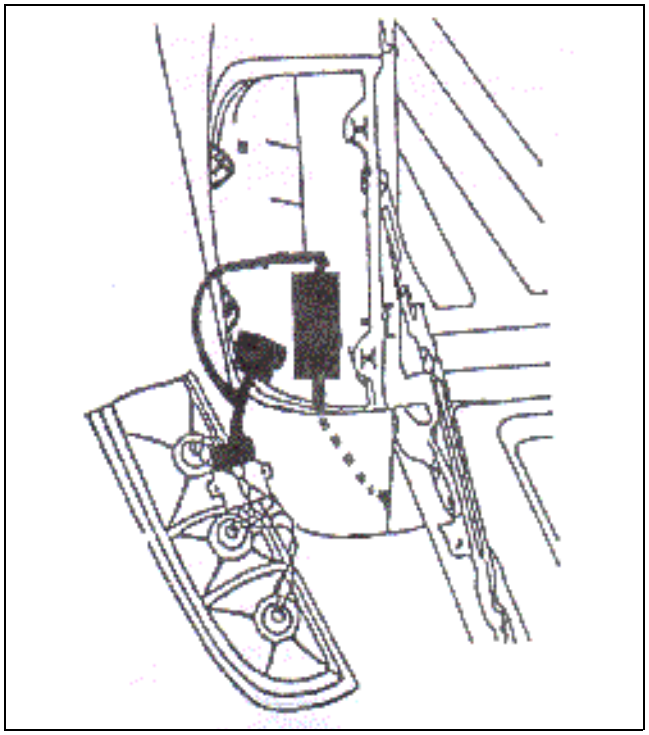

(g) Remove the old converter with harness from the taillight cavity.

5. REINSTALL THE TAILLIGHTS

(a) Reconnect the wire harness to each taillight.
(b) Reinstall both taillights.

(c) Proceed to **Section VI** for regular cab vehicles.
(d) Proceed to **Section VII** for extra cab vehicles.

IX. TRAILER TOWING WIRE HARNESS CONVERTER FUNCTIONAL CHECK

Using a voltmeter (or SST 00002-62195 if available), verify the operation of the Vehicle Taillights and Trailer Towing Wire Harness Converter as outlined below:

(a) Hazard Lights

(1) Turn on the hazard lights.

(2) Verify that the vehicle hazard lights are operating correctly.

(3) Using a voltmeter or SST verify converter operation. (check both L+STOP and R+STOP)

(4) Turn off the hazard lights.

(b) Taillights

(1) Turn the headlight switch to the ON position.

(2) Verify that the vehicle taillights are illuminated.

(3) Using a voltmeter or SST verify converter operation. (TAIL)

(4) Turn off the headlights.

(c) Stop Lights

(1) Have an assistant depress the brake pedal.

(2) Verify that the vehicle stoplights are functioning properly.

(3) Using a voltmeter or SST verify converter operation. (check both L+STOP and R+STOP)

(4) Release the brake pedal.

(d) Reinstall flat four-comector dust cover.

X. SSC COMPLETION LABEL INSTALLATION

A. After completing the repair and before returning the vehicle to the owner, an SSC completion label, that is enclosed in the owner's notification, must be affixed to the left front door hinge post near the check strap.

B. The label is to be filled out as follows:

- Write in SSC 10H.
- Write in date of repair.
- Write in your dealer code.

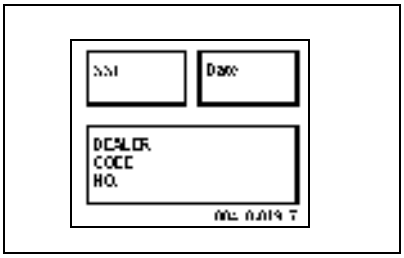

C. Additional SSC completion labels, in sheets of 50 (P/N 00410-01917), may be ordered through the non-parts system on a 1450 order form or through the TDN system.

VIII. INSTALLATION OF BED HARNESS

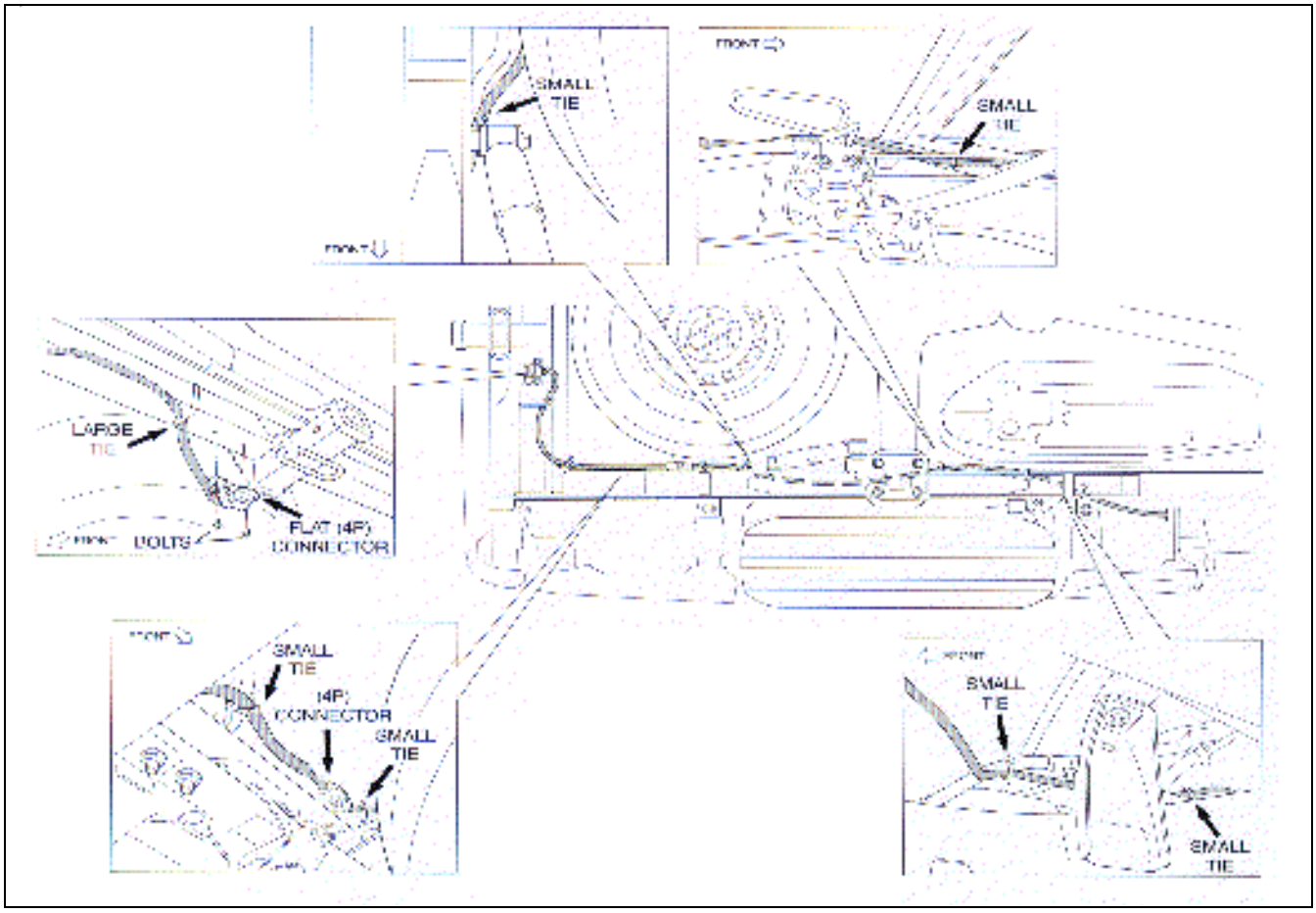

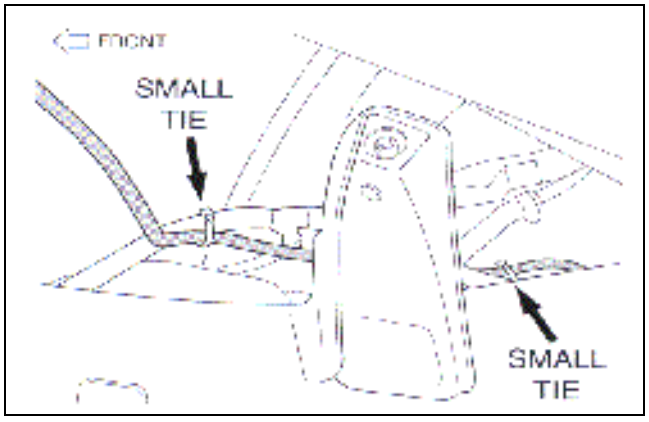

1. INSTALL THE BED WIRE HARNESS

(a) Working from the cab rearward route the wire harness along the left frame rail.

(b) Install 2 tie-wraps near the forward left bed mount in the area shown.

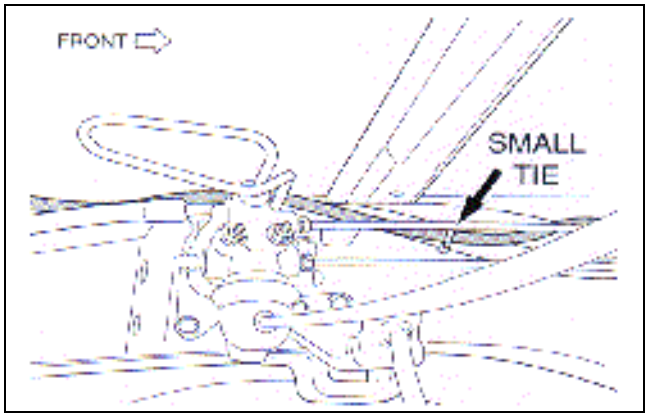

(c) Install a tie-wrap near the brake load-regulating valve.

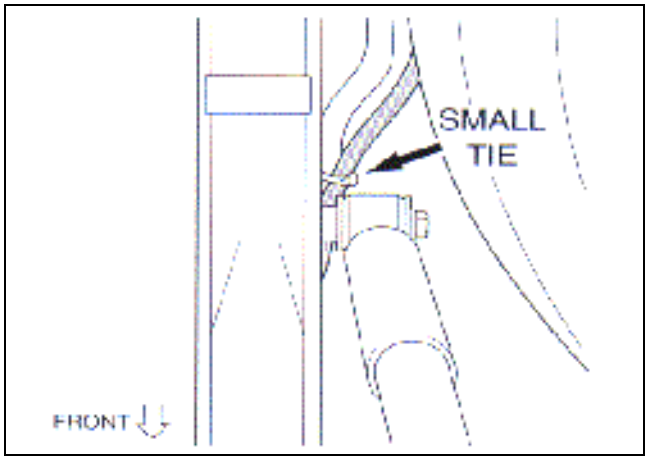

(d) Install a tie-wrap near the left rear shock as shown.

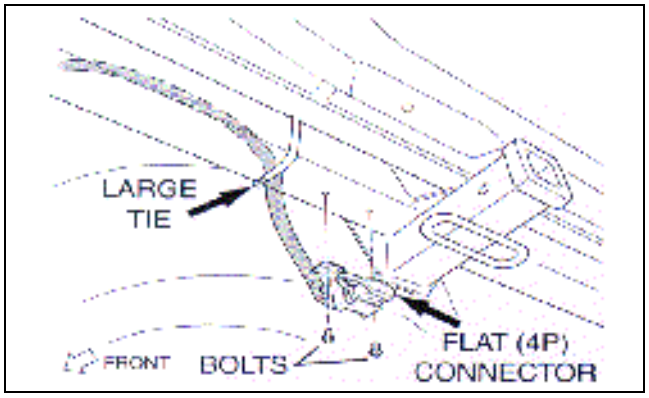

(e) Mount the flat four connector to the tow hitch.
(f) Attach the flat four harness to the hitch with a tie-wrap.

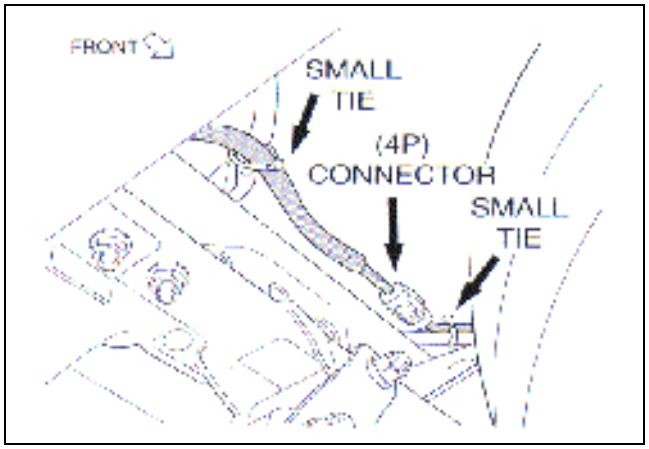

(g) Route the flat four harnesses to the converter box harness.
(h) Connect the flat four harnesses to the converter box harness and secure to vehicle frame near left rear bumper mount.

1. INSPECT FUSES

Inspect the following fuses and replace as necessary:

- STOP
- TAIL
- HAZ-TRN

2. RECONNECT THE BATTERY

(a) Reconnect the negative (-) battery terminal.
(b) Reset radio station presets.
(c) Set clock to current time.
(d) Perform the function check as outlined in **Section IX**.

TOYOTA

Toyota Motor Sales, U.S.A., Inc.
19001 South Western Avenue
P.O.Box 2991
Torrance, CA 90509-2991
(310) 618-4000
(310)618-7800 Fax

TO: ALL TOYOTA DEALER PRINCIPALS,
SERVICE MANAGERS, PARTS MANAGERS

SUBJECT: SPECIAL SERVICE CAMPAIGN 10H
(2000 TUNDRA AND 1999 - 2000 TACOMA TRAILER TOWING WIRE HARNESS CONVERTER REPLACEMENT)

Toyota will initiate a Special Service Campaign to replace the Toyota Trailer Towing Wire Harness Converter (converter) on certain 2000 model year Tundra and 1999 - 2000 model year Tacoma vehicles equipped with a genuine Toyota Trailer Towing Hitch or Bumper Hitch. This accessory is included in the Towing Hitch Kit installed at ports (PIO) and by dealers (DIO); it is also sold by dealers as an over-the-counter or service part.

An electrical short or open circuit can cause a fault in the genuine Toyota Trailer Towing Wire Harness Converter (converter). This can cause a failure of the converter, and if a trailer is being towed at the time, non-operation of the trailer lights. In limited cases, the converter housing could become heat-deformed.

In the case of the Tundra, the circuitry utilized in the converter was inadequate to properly manage vehicle and/or trailer-side voltage spikes. If the converter is exposed to a voltage spike it may cause an electrical short or open circuit within the converter.

As for the Tacoma, due to deficient waterproofing and improper installation location of the converter, which is mounted in the lower portion of the taillight cavity of the vehicle, an electrical short circuit will occur if water enters the converter housing.

The following vital information is provided to inform you and your staff of the campaign notification schedule and your degree of involvement.

1. <u>Owner Notification Letter Mailing Date</u>

The owner notification will be conducted in two phases:

- The first phase will be launched in late August and involve vehicles equipped with port installed (PIO) genuine Toyota Towing Hitch Kits.

- The remaining vehicle owners, whose vehicles **may be** equipped with a dealer installed (DIO) genuine Toyota Trailer Towing Wire Harness Converter, will be notified in the second phase to be launched in early September.

We have attached copies of the owner notification letters for your reference.

If you are contacted by an owner of an involved vehicle, who has not yet received a notification, please verify eligibility through TDN or TIS, inspect the vehicle to assure it is equipped with the affected part, and perform repairs as outlined in the attached Technical Instructions.

2. Identification of Involved Vehicles

Please see the VIN range attached to this document .*

***Not all vehicles in the VIN range are affected by this SSC. Always consult TDN or TIS to confirm VIN eligibility and to assure the SSC is applicable.**

3. Vehicles in Dealer Stock

As required by Federal Regulations, please perform the campaign procedure on any vehicle in your stock prior to sale or lease equipped with the affected converter.

4. Dealer/Owner Lists

Dealer/Owner lists have been distributed to each dealer Service Manager and Part Manager for each phase of the SSC.

- The Phase 1 list contains all the VIN's which, according to our records, were equipped with a genuine Toyota Trailer Towing Hitch by the port (PIO).
- The Phase 2 list will involve vehicle which **may be** equipped with a dealer installed (DIO) genuine Toyota Converter.
- These listed are based on Primary Marketing Area (PMA) where applicable. If there is no PMA for an address, it reverts to the selling dealer.
- Based on our records, dealers who do not have any vehicles involved in Phase 1 or 2 will receive a list indicating so.

5. Inspection and Repair Procedures

Please refer to the attached Technical Instructions. Always check TDN or TIS and perform an inspection of the harness prior to performing any repair to ensure vehicle eligibiltiy.

6. Parts Ordering

The necessary parts can be ordered through your facing PDC. Please refer to the table below and the Technical Instructions for part number information.

Model	Part Number	Description	Qty/ Vehicle
Tundra	08921-34880	Trailer Hitch Converter Kit*	1
Tacoma	08921-04850	Trailer Hitch Converter Kit*	1

To prevent parts shortages and excess parts stock at dealerships, the ¿Suggested Initial Parts Order Quantity¿ has been provided on each Dealer/Owner List (sent to each dealer's Service and Parts Managers) as a guide. This will assure adequate and balanced parts inventory for this SSC.

7. Pre-SSC Parts in Dealer Stock

Please ensure that any of the following parts for the 2000 model year Tundra and 1999 - 2000 model year Tacoma remaining in dealer inventory are not sold:

Model	Part Description	Part Number
Tundra	Bumper Hitch Wire Harness and Converter	PT207-34000
	Towing Hitch Wire Harness and Converter	PT207-34002
Tacoma	Wire Harness and Converter	PT207-04981
	Towing Hitch Wire Harness Kit	PT214-04985

All Pre-SSC kits or parts are to be returned to your facing PDC utilizing the following instructions:

- Complete form *TMP134** and check Return Code of R2.
  ***Dealerships using Dealer Daily must still fill out and submit a paper form TMP134 for this activity.**

- No pre-approval is required, but **attach a copy of this page.**

- All parts must be returned no later than October 31, 2001.

8. Reimbursement Procedures

Submit Special Service Campaign claims following the procedures described in the Toyota Warranty Policy and Procedures Manual.

The operation codes to be used for this campaign are as follows:

SSC #	Model	Op. Code	Description	Flat Rate Hour
10H	Both	1517G1	Inspection Only	0.3 Hr/Veh
	Tundra	1517G3	Inspect and Replace the Trailer Towing Wire Harness Converter	0.7 Hr/Veh
	Tacoma	1517G2	Inspect and Replace the Trailer Towing Wire Harness Converter	0.9 Hr/Veh

NOTE: The above flat rate time includes 0.1 hours of administrative cost per unit for the dealership.

Please review this entire package with your Service and Parts staff to familiarize them with the proper step-by-step procedures required to implement this Special Service Campaign.

Thank you for your cooperation.

TOYOTA MOTOR SALES, U.S.A., INC.

Attachments:

SSC 10H VIN RANGE

MODEL	YEAR	VIN Range	
		VDS	Range
Tundra	2000	JN321	001001 – 125878
		RN341	001001 – 125859
		RT341	001001 – 125904
		RT381	001001 – 125897
		KN441	001001 – 051314
		KT441	001001 – 125833
		BN441	001001 – 125840
		BT441	001001 – 125901
		BT481	001001 - 125894
Tacoma	1999	NL42N	XZ400001 – XZ570641
		VL52N	XZ400621 – XZ571068
		VN52N	XZ402278 – XZ572065
		NM92N	XZ412228 – XZ571812
		SM92N	XZ401988 – XZ572040
		SN92N	XZ403051 – XZ573245
		PM62N	XZ401072 – XZ571294
		WM72N	XZ401467 – XZ571721
		WN72N	XZ402312 – XZ572790
		WN74N	XZ402697 – XZ572796
	2000	NL42N	YZ573246 – YZ718163
		VL52L	YZ573678 – YZ718157
		VN52N	YZ575196 – YZ716365
		NM92N	YZ574852 – YZ718160
		SM92N	YZ574939 – YZ718154
		SN92N	YZ575840 – YZ718161
		PM62N	YZ574104 – YZ718150
		WM72N	YZ574354 – YZ718139
		WN72N	YZ575215 – YZ718158
		WN74N	YZ575837 – YZ714610

***Not all vehicles in the VIN range are affected by this SSC. Always consult TDN or TIS to confirm VIN eligibility and to assure the SSC is applicable.**

2000 MY Toyota Tundra and 1999 - 2000 MY Toyota Tacoma
Trailer Towing Wire Harness Converter Safety Recall Notice

Dear Toyota Owner:

This notice is being sent to you in accordance with the requirements of the National Traffic and Motor Vehicle Safety Act. Toyota has decided that a defect, which relates to motor vehicle safety, exists in certain 2000 model year Toyota Tundra and 1999 - 2000 model year Toyota Tacoma trucks equipped with the genuine Toyota Trailer Towing Wire Harness Converter (¿converte¿).

The converter (included as a component of the Toyota Towing Hitch Kit Accessory) integrates the vehicle¿s tail lights, brake lights, and turn-signal lights with those equipped on a trailer.

What is the problem?

An electrical short or open circuit can cause a fault in the genuine Toyota Trailer Towing Wire Harness Converter. This can cause a failure of the converter, and if a trailer is being towed at the time, non-operation of the trailer lights. In limited cases, the converter housing could become heat-deformed. In the worst case, driving without trailer lights will increase the possibility of a vehicle accident.

What will Toyota do?

Any Toyota dealer will inspect, and if your vehicle is so equipped, replace the converter with an improved one at NO COST to you.

What Should You Do?

Contact any authorized Toyota dealer to schedule an appointment for the replacement of the genuine Toyota Trailer Harness Converter as soon as possible.

The labor time for the replacement of the Converter is slightly less than 1 hour. However, depending upon the dealer¿s work schedule, it may be necessary to make your vehicle available for a longer period of time.

Please present this notice to the dealer when you bring the vehicle in for your service appointment.

If you determine your vehicle is not equipped with a Trailer Towing Hitch, the involved genuine Toyota converter, or you no longer own the vehicle, please check the appropriate box on the attached postage paid form and return it to us.

How can you identify the affected genuine Toyota Trailer Towing Wire Harness Converter?

If you prefer to inspect the vehicle yourself, the converter can be identified by using a mirror to inspect the underside of the ¿Flat Fou¿ trailer connector (mounted on the drive¿s side, under the Trailer Towing Hitch) for the Toyota Logo as indicated in the diagram.

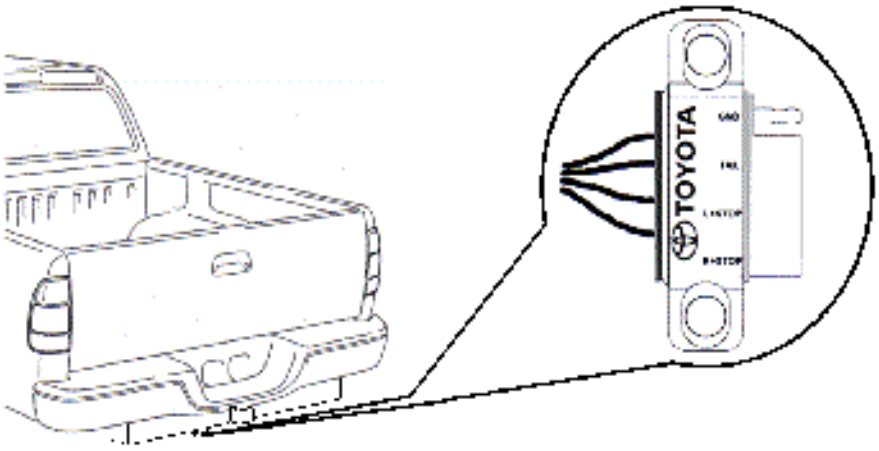

What if you have other questions?

Please contact any Toyota dealer or call the Toyota Customer Assistance Center at 800-331-4331.

If you believe that the dealer or Toyota has failed or is unable to remedy the defect within a reasonable time, you may submit a complaint to the administrator, National Highway Traffic Safety Administration, 400 Seventh Street S.W., Washington, D.C. 20590, or call the toll free Auto Safety Hot Line at 888-327-4236 (Washington, D.C. area residents may call 366-0123).

We have sent this notice in the interest of your continued satisfaction with our products, and we sincerely regret any inconveniences this condition may have caused you.

Thank you for driving a Toyota.

Sincerely,

TOYOTA MOTOR SALES, U.S.A., INC.

2000 MY Toyota Tundra and 1999 - 2000 MY Toyota Tacoma
Trailer Towing Wire Harness Converter Safety Recall Notice

Dear Toyota Owner:

This notice is being sent to you in accordance with the requirements of the National Traffic and Motor Vehicle Safety Act. Toyota has decided that a defect, which relates to motor vehicle safety, exists in certain 2000 model year Toyota Tundra and 1999 - 2000 model year Toyota Tacoma trucks equipped with the genuine Toyota Trailer Towing Wire Harness Converter (¿converter¿).

The converter (included as a component of the genuine Toyota Towing Hitch Kit Accessory) integrates the vehicle¿s tail lights, brake lights, and turn-signal lights with those equipped on a trailer.

What is the problem?

An electrical short or open circuit can cause a fault in the genuine Toyota Trailer Towing Wire Harness Converter. This can cause a failure of the converter, and if a trailer is being towed at the time, non-operation of the trailer lights. In limited cases, the converter housing could become heat-deformed. In the worst case, driving without trailer lights will increase the possibility of a vehicle accident.

What will Toyota do?

Any Toyota dealer will replace the genuine Toyota Trailer Towing Wire Harness Converter with an improved one at NO COST to you.

What should you do?

Contact any authorized Toyota dealer to schedule an appointment for the replacement of the genuine Toyota Trailer Harness Converter as soon as possible.

The labor time for the replacement of the converter is slightly less than 1 hour. However, depending upon the dealer¿s work schedule, it may be necessary to make your vehicle available for a longer period of time.

Please present this notice to the dealer when you bring the vehicle in for your service appointment.

If your vehicle is not equipped with a genuine Toyota Trailer Towing Hitch Accessory or you no longer own the vehicle, please complete the appropriate information on the enclosed postage paid form, and return it to us.

If you have other questions

Please contact any Toyota dealer or call the Toyota Customer Assistance Center at 800-331-4331.

If you believe that the dealer or Toyota has failed or is unable to remedy the defect within a reasonable time, you may submit a complaint to the administrator, National Highway Traffic Safety Administration, 400 Seventh Street S.W., Washington, D.C. 20590, or call the toll free Auto Safety Hot Line at 888-327-4236 (Washington, D.C. area residents may call 366-0123).

We have sent this notice in the interest of your continued satisfaction with our products, and we sincerely regret any inconveniences this condition may have caused you.

Thank you for driving a Toyota.

Sincerely,

TOYOTA MOTOR SALES, U.S.A., INC.

TECHNICAL INSTRUCTIONS

FOR

SPECIAL SERVICE CAMPAIGN 10H

PART B (1999-2000 TACOMA)

TRAILER TOWING WIRE HARNESS CONVERTER REPLACEMENT

I. OPERATION FLOW CHART

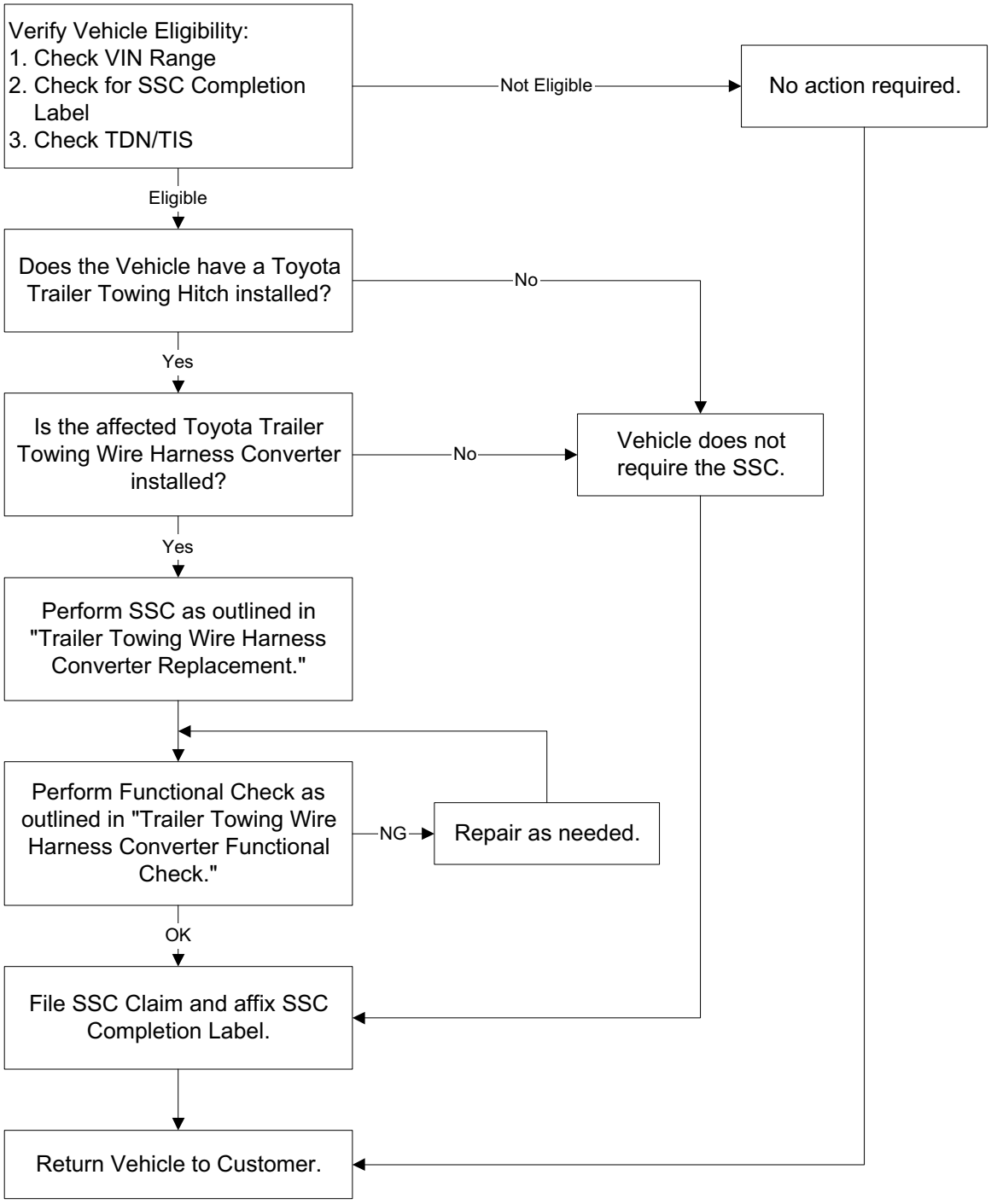

II. AFFECTED VIN RANGE

MODEL	YEAR	VIN Range	
		VDS	Range
Tacoma	1999	NL42N	XZ400001 – XZ570641
		VL52N	XZ400621 – XZ571068
		VN52N	XZ402278 – XZ572065
		NM92N	XZ412228 – XZ571812
		SM92N	XZ401988 – XZ572040
		SN92N	XZ403051 – XZ573245
		PM62N	XZ401072 – XZ571294
		WM72N	XZ401467 – XZ571721
		WN72N	XZ402312 – XZ572790
		WN74N	XZ402697 – XZ572796
	2000	NL42N	YZ573246 – YZ718163
		VL52N	YZ573678 – YZ718157
		VN52N	YZ575196 – YZ716365
		NM92N	YZ574852 – YZ718160
		SM92N	YZ574939 – YZ718154
		SN92N	YZ575840 – YZ718161
		PM62N	YZ574104 – YZ718150
		WM72N	YZ574354 – YZ718139
		WN72N	YZ575215 – YZ718158
		WN74N	YZ575837 – YZ714610

NOTE: Only vehicles equipped with a Toyota Trailer Towing Wire Harness Converter are affected. Always verify eligibility through TDN/TIS prior to performing repairs.

III. PREPARATION

A. PARTS

Model	Part Number	Description	Qty/ Vehicle
Tacoma	08921-04850	Trailer Harness Kit	1

Trailer Wire Harness Kit Parts Description

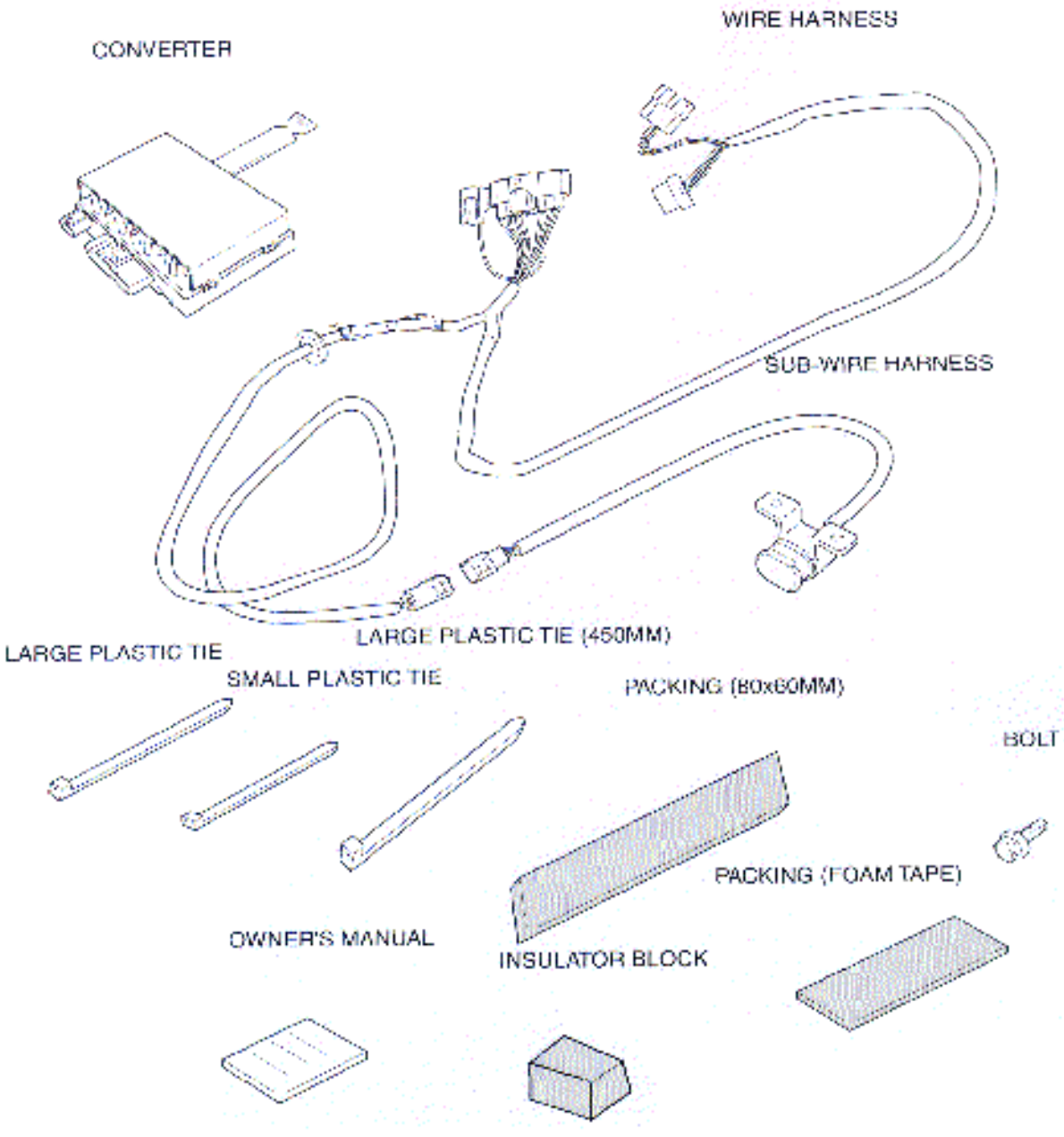

B. TOOLS

- Standard Hand Tools

C. COMPONENTS

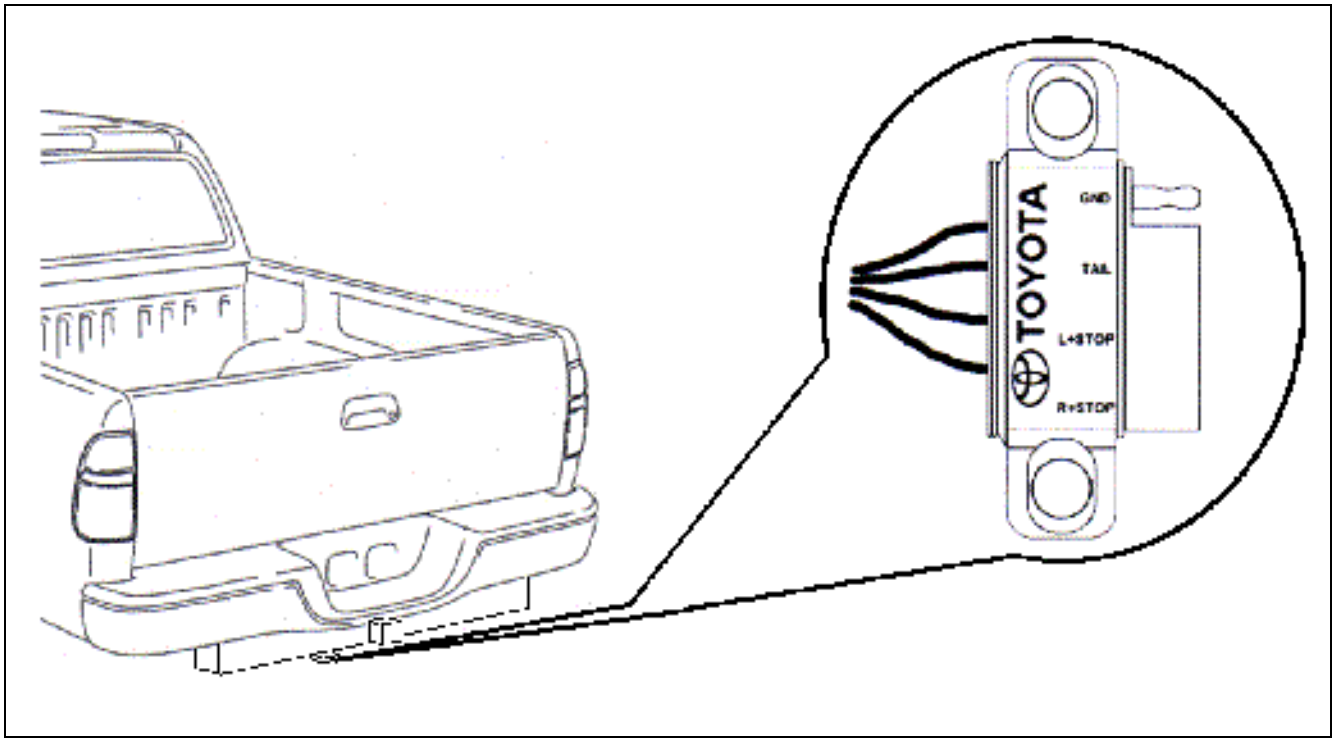

IV. VEHICLE INSPECTION

1. VERIFY VEHICLE ELIGIBILITY

(a) Confirm that the VIN is within the SSC VIN range.

(b) Inspect the driver's side door pillar for an SSC completion label.

(c) Assure that the vehicle is equipped with a Toyota trailer towing wire harness converter.

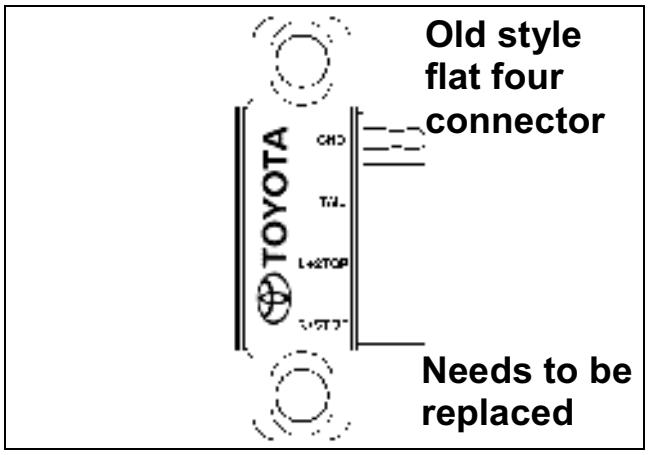

2. INSPECT TRAILER TOWING FLAT FOUR CONNECTOR

The involved converter can be identified by using a mirror to inspect the underside of the ***plastic*** trailer towing "flat four" connector (mounted on the driver's side, under the trailer towing hitch) for the Toyota logo as indicated in the diagram.

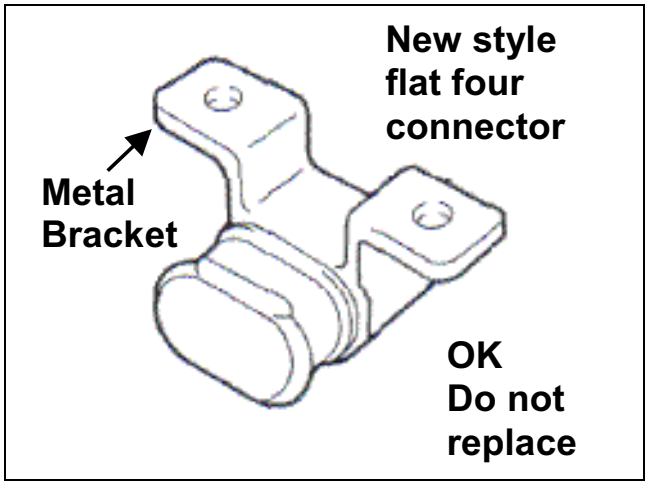

NOTE:
The new Trailer Towing Harness Converter (no need to replace) flat four connector is mounted to a *metal* bracket.

NOTE:
Since a customer may elect to install aftermarket trailer towing equipment, inspect the vehicle to determine if it is equipped with the involved Toyota trailer towing wiring harness converter. Only vehicles equipped with the old style flat four connector are subject to this SSC.

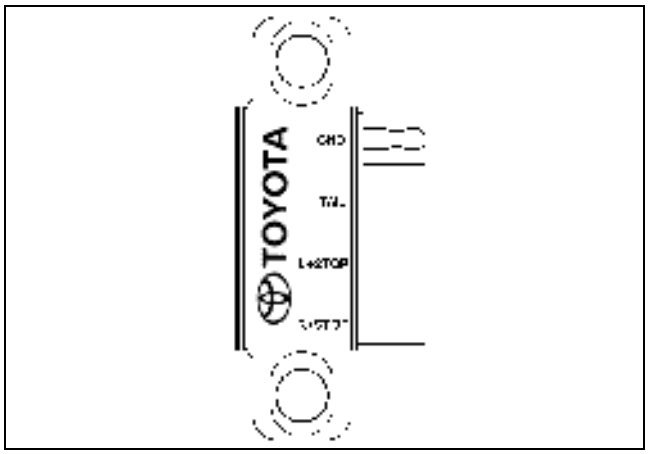

(a) If the "flat four" connector **<u>has</u>** "TOYOTA" imprinted on it, then **<u>continue to Section V</u>**.

(b) If the "flat four" connector **<u>does not have</u>** "TOYOTA" imprinted on it or if the the "TOYOTA" is imprinted on the metal bracket portion. **<u>Proceed to Section X.</u>** "SSC COMPLETIONLABEL INSTALLATION" and file an "INSPECTION ONLY" SSC claim.

4WD (w/o 2–4 SELECT SW EXCEPT CALIFORNIA)

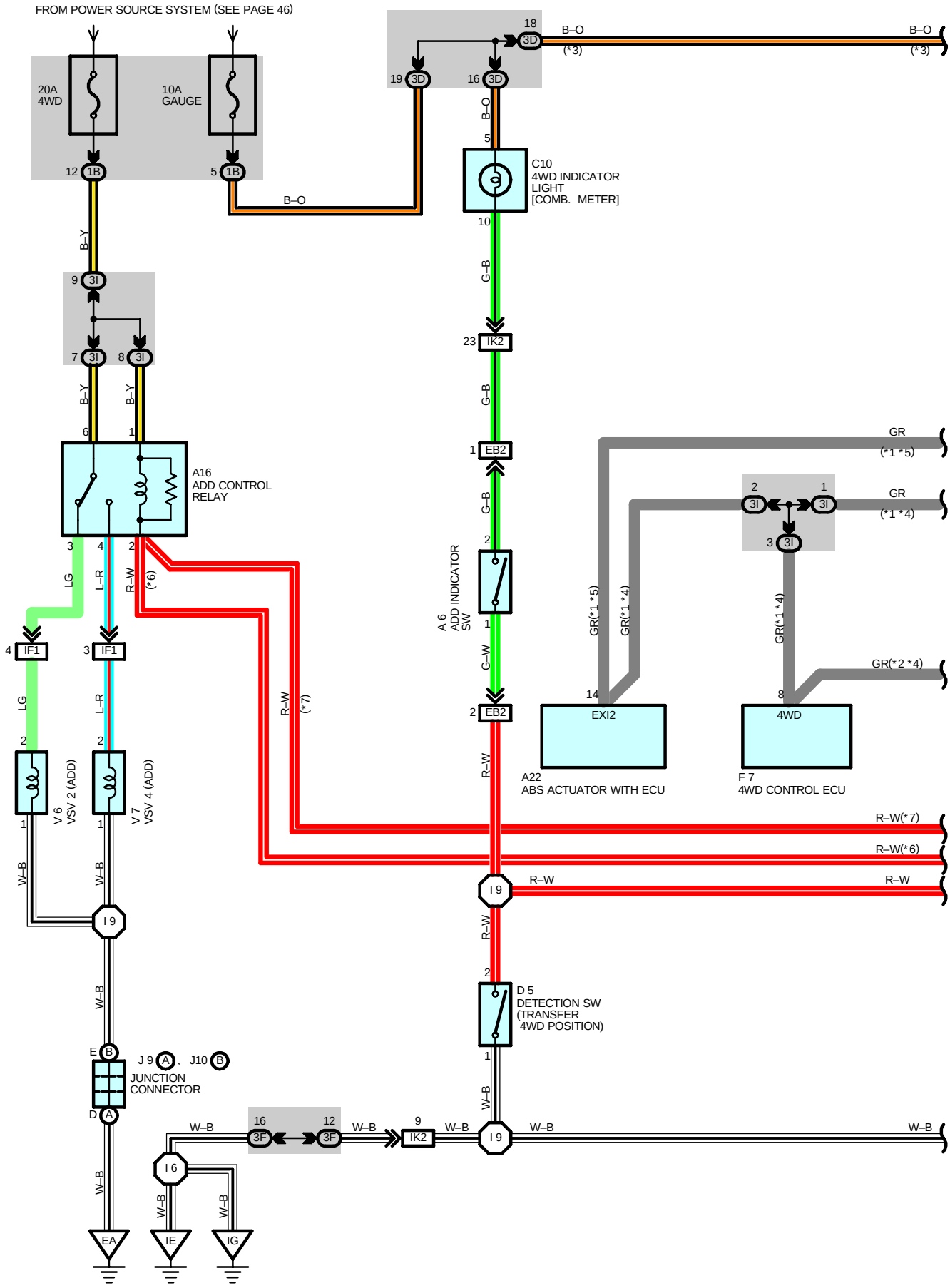

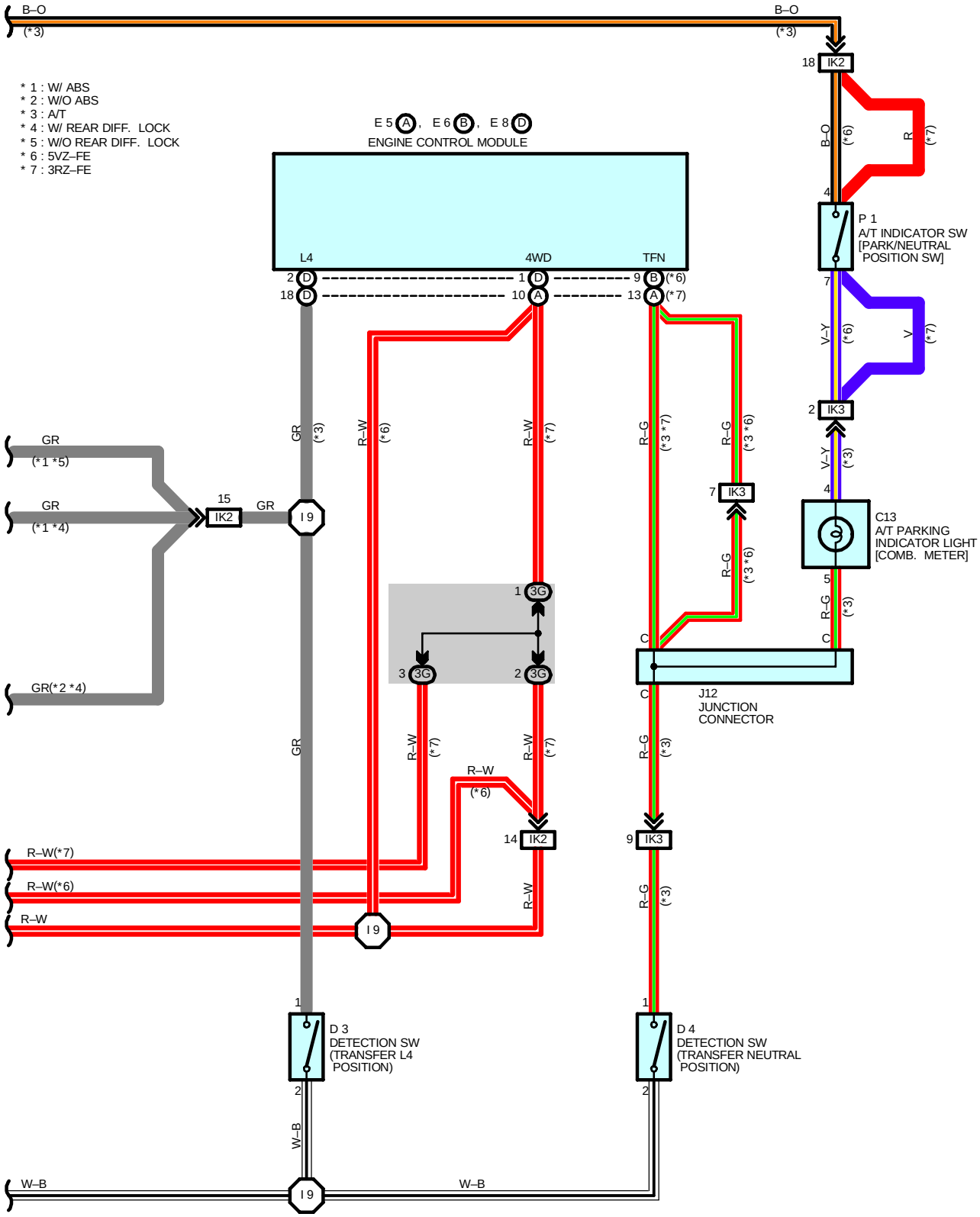
* 1 : W/ ABS
* 2 : W/O ABS
* 3 : A/T
* 4 : W/ REAR DIFF. LOCK
* 5 : W/O REAR DIFF. LOCK
* 6 : 5VZ–FE
* 7 : 3RZ–FE
E5 A, E6 B, E8 D
ENGINE CONTROL MODULE
L4
4WD
TFN
B–O (*3)
B–O (*3)
18 IK2
B–O (*6)
R (*7)
4
P 1
A/T INDICATOR SW
[PARK/NEUTRAL POSITION SW]
7
V–Y (*6)
V (*7)
2 IK3
V–Y (*3)
4
C13
A/T PARKING INDICATOR LIGHT
[COMB. METER]
5
R–G (*3)
C
GR (*1 *5)
GR (*1 *4)
15 IK2
GR
I 9
GR (*3)
R–W (*6)
R–W (*7)
R–G (*3 *7)
R–G (*3 *6)
7 IK3
R–G (*3 *6)
GR(*2 *4)
1 3G
3 3G
2 3G
C
J12
JUNCTION CONNECTOR
C
GR
R–W (*7)
R–W (*7)
R–G (*3)
R–W (*6)
14 IK2
9 IK3
R–W(*7)
R–W(*6)
R–W
I 9
R–W
R–G (*3)
1
D 3
DETECTION SW
(TRANSFER L4 POSITION)
2
1
D 4
DETECTION SW
(TRANSFER NEUTRAL POSITION)
2
W–B
W–B
I 9
W–B

4WD (w/o 2–4 SELECT SW EXCEPT CALIFORNIA)

SERVICE HINTS

A16 ADD CONTROL RELAY

3–6 : Closed with ignition SW at **OFF** position or ignition SW on and detection SW (Transfer 4WD position) at **OFF** position
4–6 : Closed with ignition SW at **ON** position or ignition SW on and detection SW (Transfer 4WD position) at **ON** position

P1 A/T INDICATOR SW [PARK/NEUTRAL POSITION SW]

4–7 : Closed with A/T shift position at **P** position

D4 DETECTION SW (TRANSFER NEUTRAL POSITION)

1–2 : Closed with transfer position at **N** position

○ : PARTS LOCATION

Code	See Page	Code	See Page	Code	See Page
A6	28 (5VZ–FE)	D4	30 (3RZ–FE)	J10 B	31 (3RZ–FE)
	30 (3RZ–FE)	D5	28 (5VZ–FE)	J12	33
A16	32		30 (3RZ–FE)	P1	29 (5VZ–FE)
A22	28 (5VZ–FE)	E5 A	33		31 (3RZ–FE)
	30 (3RZ–FE)	E6 B	33	V6	29 (5VZ–FE)
C10	32	E8 D	33		31 (3RZ–FE)
C13	32	F7	33	V7	29 (5VZ–FE)
D3	28 (5VZ–FE)	J9 A	29 (5VZ–FE)		31 (3RZ–FE)
	30 (3RZ–FE)		31 (3RZ–FE)		
D4	28 (5VZ–FE)	J10 B	29 (5VZ–FE)		

⬭ : JUNCTION BLOCK AND WIRE HARNESS CONNECTOR

Code	See Page	Junction Block and Wire Harness (Connector Location)
1B	22	Cowl Wire and J/B No.1 (Lower Finish Panel)
3D	24	Cowl Wire and J/B No.3 (Bihind the Instrument Panel Left)
3F		
3G	26	Cowl Wire and J/B No.3 (Bihind the Instrument Panel Center)
3I		

▭ : CONNECTOR JOINING WIRE HARNESS AND WIRE HARNESS

Code	See Page	Joining Wire Harness and Wire Harness (Connector Location)
EB2	36 (5VZ–FE)	Engine Wire and Differential Wire (Front Differential Upper Side)
	38 (3RZ–FE)	
IF1	40	Engine Room Main Wire and Cowl Wire (Left Kick Panel)
IK2	40	Engine Wire and Cowl Wire (Right Kick Panel)
IK3		

▽ : GROUND POINTS

Code	See Page	Ground Points Location
EA	36 (5VZ–FE)	Front Left Fender
	38 (3RZ–FE)	
IE	40	Around the Right Edge of the Reinforcement
IG	40	Around the Left Edge of the Reinforcement

⯃ : SPLICE POINTS

Code	See Page	Wire Harness with Splice Points	Code	See Page	Wire Harness with Splice Points
I6	40	Cowl Wire	I9	40	Cowl Wire

ABBREVIATIONS

The following abbreviations are used in this manual.

ABS	=	Anti–Lock Brake System
A/C	=	Air Conditioning
ADD	=	Automatic Disconnecting Differential
A/T	=	Automatic Transmission
COMB.	=	Combination
DIFF.	=	Differential
ECU	=	Electronic Control Unit
EGR	=	Exhaust Gas Recirculation
ESA	=	Electronic Spark Advance
EVAP	=	Evaporative Emission
J/B	=	Junction Block
LH	=	Left–Hand
M/T	=	Manual Transmission
O/D	=	Overdrive
R/B	=	Relay Block
RH	=	Right–Hand
SFI	=	Sequential Multiport Fuel Injection
SPEC.	=	Specification
SRS	=	Supplemental Restraint System
SW	=	Switch
TEMP.	=	Temperature
VSV	=	Vacuum Switching Valve
w/	=	With
w/o	=	Without
2WD	=	Two Wheel Drive
4WD	=	Four Wheel Drive

* The titles given inside the components are the names of the terminals (terminal codes) and are not treated as being abbreviations.

5/18/01

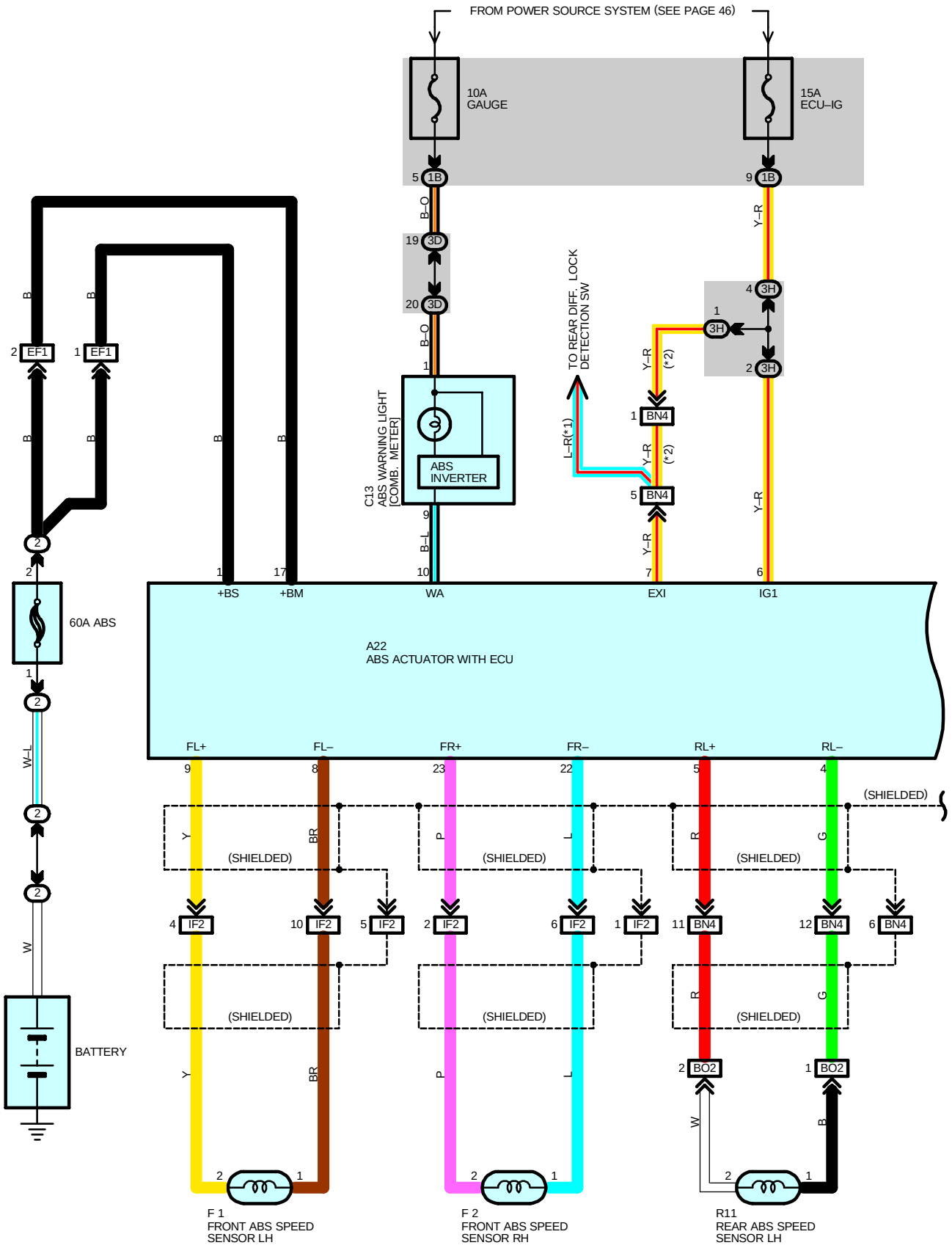
FROM POWER SOURCE SYSTEM (SEE PAGE 46)
10A
GAUGE
15A
ECU–IG
5 1B
9 1B
B–O
Y–R
19 3D
20 3D
B–O
1
4 3H
1 3H
2 3H
TO REAR DIFF. LOCK
DETECTION SW
L–R(*1)
Y–R
(*2)
1 BN4
Y–R
(*2)
5 BN4
Y–R
Y–R
C13
ABS WARNING LIGHT
[COMB. METER]
ABS
INVERTER
9
B–L
10
2 EF1
1 EF1
B
B
B
B
B
B
2
2
1
17
+BS
+BM
WA
EXI
IG1
60A ABS
1
2
W–L
2
2
W
BATTERY
A22
ABS ACTUATOR WITH ECU
FL+
FL–
FR+
FR–
RL+
RL–
9
8
23
22
5
4
(SHIELDED)
Y
BR
P
L
R
G
4 IF2
10 IF2
5 IF2
2 IF2
6 IF2
1 IF2
11 BN4
12 BN4
6 BN4
2 BO2
1 BO2
W
B
2
1
F 1
FRONT ABS SPEED
SENSOR LH
F 2
FRONT ABS SPEED
SENSOR RH
R11
REAR ABS SPEED
SENSOR LH

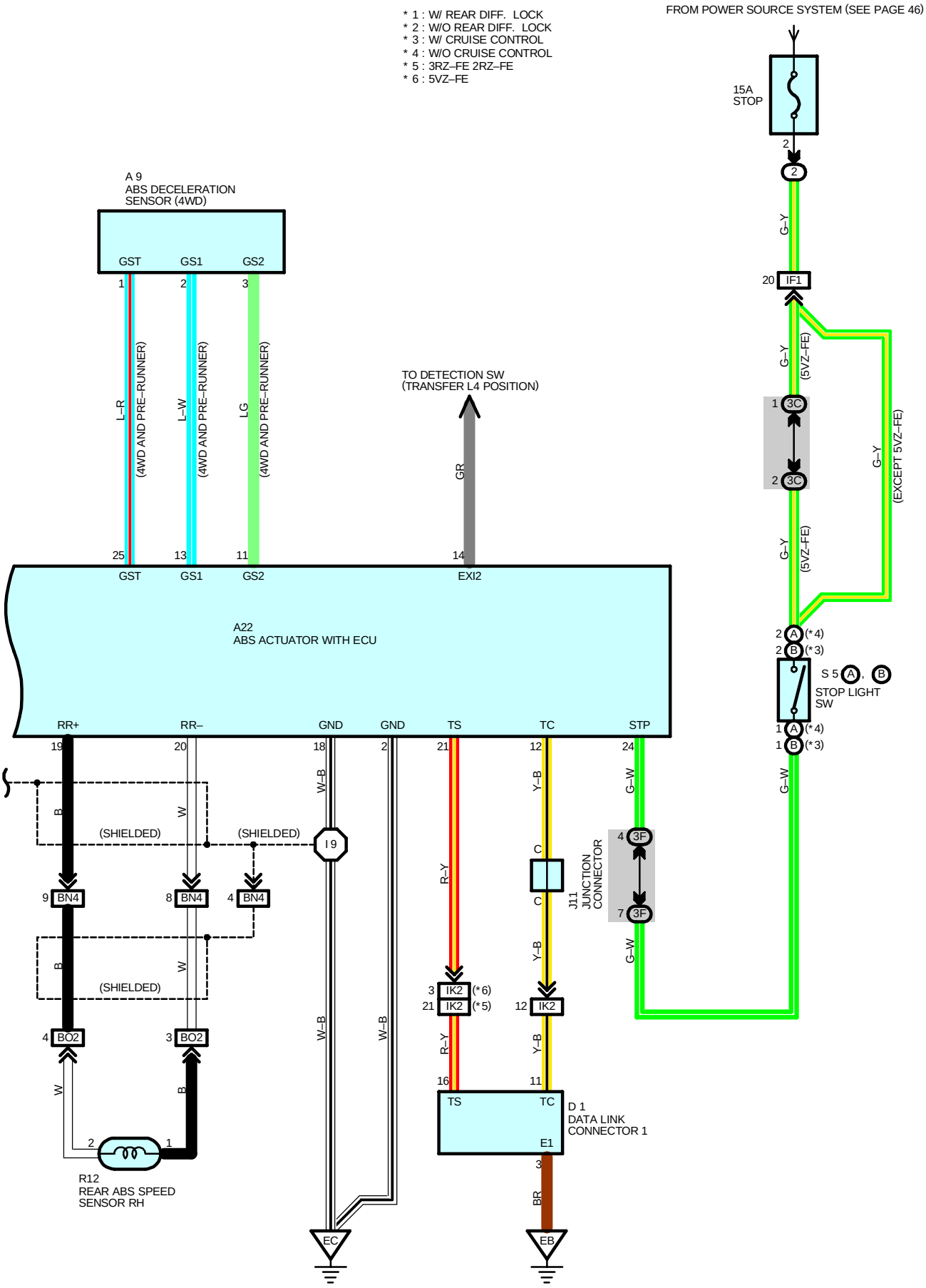
* 1 : W/ REAR DIFF. LOCK
* 2 : W/O REAR DIFF. LOCK
* 3 : W/ CRUISE CONTROL
* 4 : W/O CRUISE CONTROL
* 5 : 3RZ–FE 2RZ–FE
* 6 : 5VZ–FE
FROM POWER SOURCE SYSTEM (SEE PAGE 46)
15A
STOP
A 9
ABS DECELERATION
SENSOR (4WD)
GST
GS1
GS2
L–R
(4WD AND PRE–RUNNER)
L–W
(4WD AND PRE–RUNNER)
LG
(4WD AND PRE–RUNNER)
TO DETECTION SW
(TRANSFER L4 POSITION)
GR
EXI2
A22
ABS ACTUATOR WITH ECU
RR+
RR–
GND
GND
TS
TC
STP
G–Y
IF1
(5VZ–FE)
3C
(EXCEPT 5VZ–FE)
(*4)
(*3)
S 5
STOP LIGHT
SW
G–W
B
W
(SHIELDED)
I 9
BN4
W–B
R–Y
Y–B
IK2
(*6)
(*5)
J11
JUNCTION
CONNECTOR
3F
BO2
R12
REAR ABS SPEED
SENSOR RH
D 1
DATA LINK
CONNECTOR 1
TS
TC
E1
BR
EC
EB

SYSTEM OUTLINE

This system controls the respective brake fluid pressures acting on the disc brake cylinders of the right front wheel, left front wheel, and rear wheels when the brakes are applied in a panic stop so that the wheels do not lock.
This results in improved directional stability and steerability during panic braking.

1. INPUT SIGNAL

(1) Speed sensor signal
The speed of the wheels is detected and input to TERMINALS FL+, FR+, RL+ and RR+ of the ABS actuator with ECU.
(2) Stop light SW signal
A signal is input to TERMINAL STP of the ABS actuator with ECU when the brake pedal is depressed.
(3) Deceleration sensor signal (4WD)
Longitudinal acceleration is detected and a signal is input to the ABS actuator with ECU.

2. SYSTEM OPERATION

During sudden braking, the ABS actuator with ECU which has signals input from each sensor lets the hydraulic pressure acting on each wheel cylinder escape to the reservoir.
The pump inside the ABS actuator with ECU is also operating at this time and it returns the brake fluid from the reservoir to the master cylinder, thus preventing locking of vehicle wheels.
If the ABS actuator with ECU judges that the hydraulic pressure acting on the wheel cylinder is insufficient, the current acting on the solenoid is controlled and the hydraulic pressure is increased.
Holding of the hydraulic pressure is also controlled by the ECU, by the same method as above, by repeated pressure reduction. Holding and increase are repeated to maintain vehicle stability and to improve steerability during sudden braking.

SERVICE HINTS

F1, F2 FRONT ABS SPEED SENSOR LH, RH
1–2 : **0.92**–**1.22** kΩ (**20**˚C, **68**˚F) (2WD)
1.40–**1.80** kΩ (**20**˚C, **68**˚F) (4WD)

R11, R12 REAR ABS SPEED SENSOR LH, RH
1–2 : **0.89**–**1.29** kΩ (**20**˚C, **68**˚F)

A22 ABS ACTUATOR WITH ECU
6–GROUND : **10**–**14** volts with ignition SW on
24–GROUND : **10**–**14** volts with stop light SW on (Brake pedal depressed)
2, 18–GROUND : Always continuity

S5 (A), (B) STOP LIGHT SW
(A) 2–(A) 1, (B) 2–(B) 1 : Closed with brake pedal depressed

: PARTS LOCATION

Code	See Page	Code	See Page	Code		See Page
A9	32	D1	30 (3RZ–FE, 2RZ–FE)	J11		33
A22	28 (5VZ–FE)	F1	28 (5VZ–FE)	R11		34
	30 (3RZ–FE, 2RZ–FE)		30 (3RZ–FE, 2RZ–FE)	R12		34
C13	32	F2	28 (5VZ–FE)	S5	A	33
D1	28 (5VZ–FE)		30 (3RZ–FE, 2RZ–FE)		B	33

: RELAY BLOCKS

Code	See Page	Relay Blocks (Relay Block Location)
2	21	R/B No.2 (Engine Compartment Left)

: JUNCTION BLOCK AND WIRE HARNESS CONNECTOR

Code	See Page	Junction Block and Wire Harness (Connector Location)
1B	22	Cowl Wire and J/B No.1 (Lower Finish Panel)
3C	24	Cowl Wire and J/B No.3 (Bihind the Instrument Panel Left)
3D		
3F		
3H	26	Cowl Wire and J/B No.3 (Bihind the Instrument Panel Center)

: CONNECTOR JOINING WIRE HARNESS AND WIRE HARNESS

Code	See Page	Joining Wire Harness and Wire Harness (Connector Location)
EF1	36 (5VZ–FE)	Cowl Wire and Engine Room Main Wire (Right Fender)
	38 (3RZ–FE, 2RZ–FE)	
IF1	40	Engine Room Main Wire and Cowl Wire (Left Kick Panel)
IF2		
IK2	40	Engine Wire and Cowl Wire (Right Kick Panel)
BN4	42	Frame Wire and Cowl Wire (Under the Driver's Seat)
BO2	42	Frame Wire and Diff. Lock Wire (Rear Side Member LH)

: GROUND POINTS

Code	See Page	Ground Points Location
EB	36 (5VZ–FE)	Under the Data Link Connector 1
	38 (3RZ–FE, 2RZ–FE)	Near the Throttle Body
EC	36 (5VZ–FE)	Front Right Fender
	38 (3RZ–FE, 2RZ–FE)	

: SPLICE POINTS

Code	See Page	Wire Harness with Splice Points	Code	See Page	Wire Harness with Splice Points
I9	40	Cowl Wire			

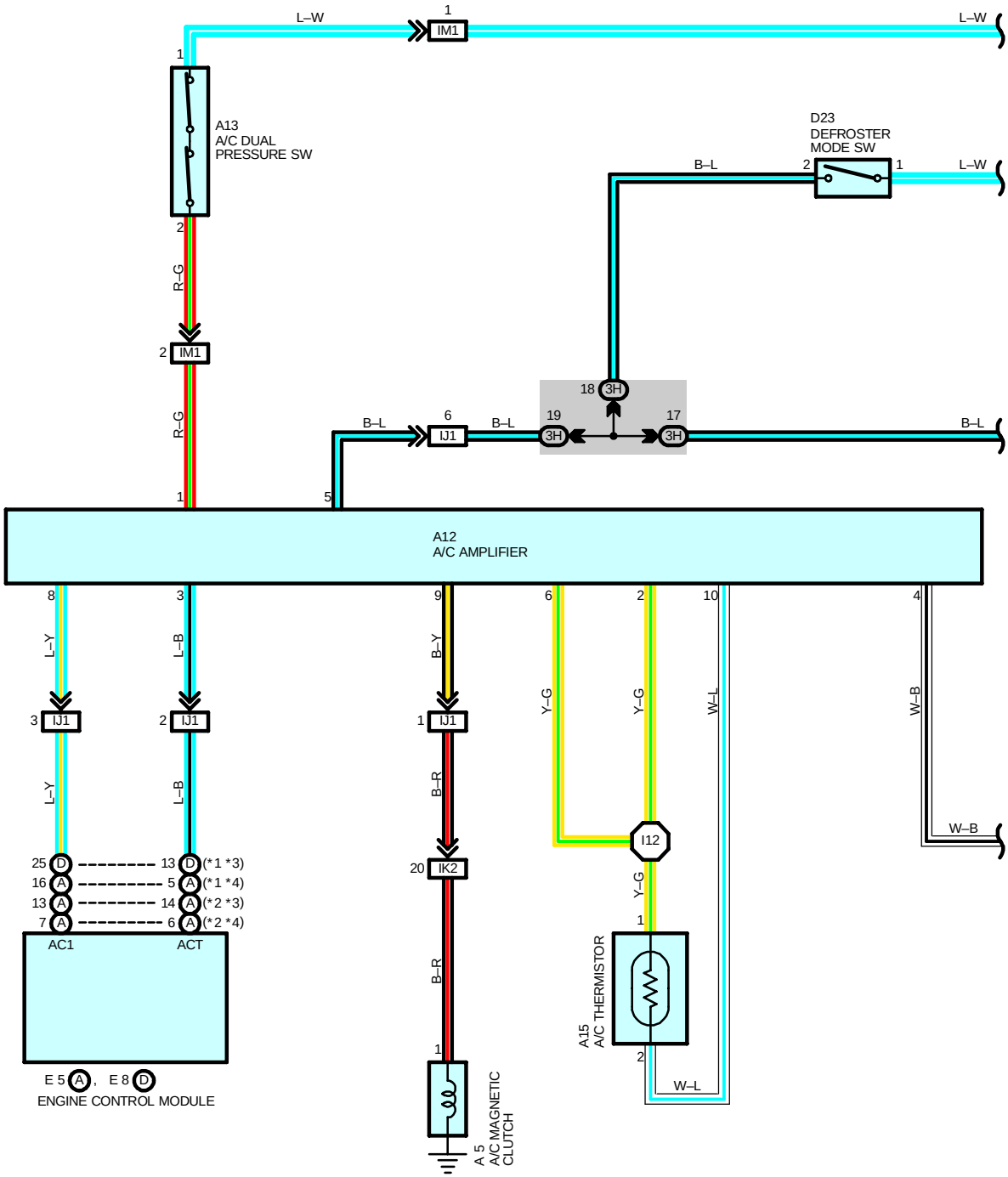
L–W
1
IM1
L–W
A13
A/C DUAL
PRESSURE SW
D23
DEFROSTER
MODE SW
B–L
2
1
L–W
R–G
2
IM1
R–G
18
3H
B–L
6
IJ1
B–L
19
3H
17
3H
B–L
5
1
A12
A/C AMPLIFIER
8
L–Y
3
IJ1
L–Y
3
L–B
2
IJ1
L–B
9
B–Y
1
IJ1
B–R
6
Y–G
2
Y–G
10
W–L
4
W–B
W–B
I12
Y–G
1
A15
A/C THERMISTOR
2
W–L
20
IK2
B–R
1
A 5
A/C MAGNETIC
CLUTCH
25 D
16 A
13 A
7 A
13 D (*1 *3)
5 A (*1 *4)
14 A (*2 *3)
6 A (*2 *4)
AC1
ACT
E 5 A , E 8 D
ENGINE CONTROL MODULE

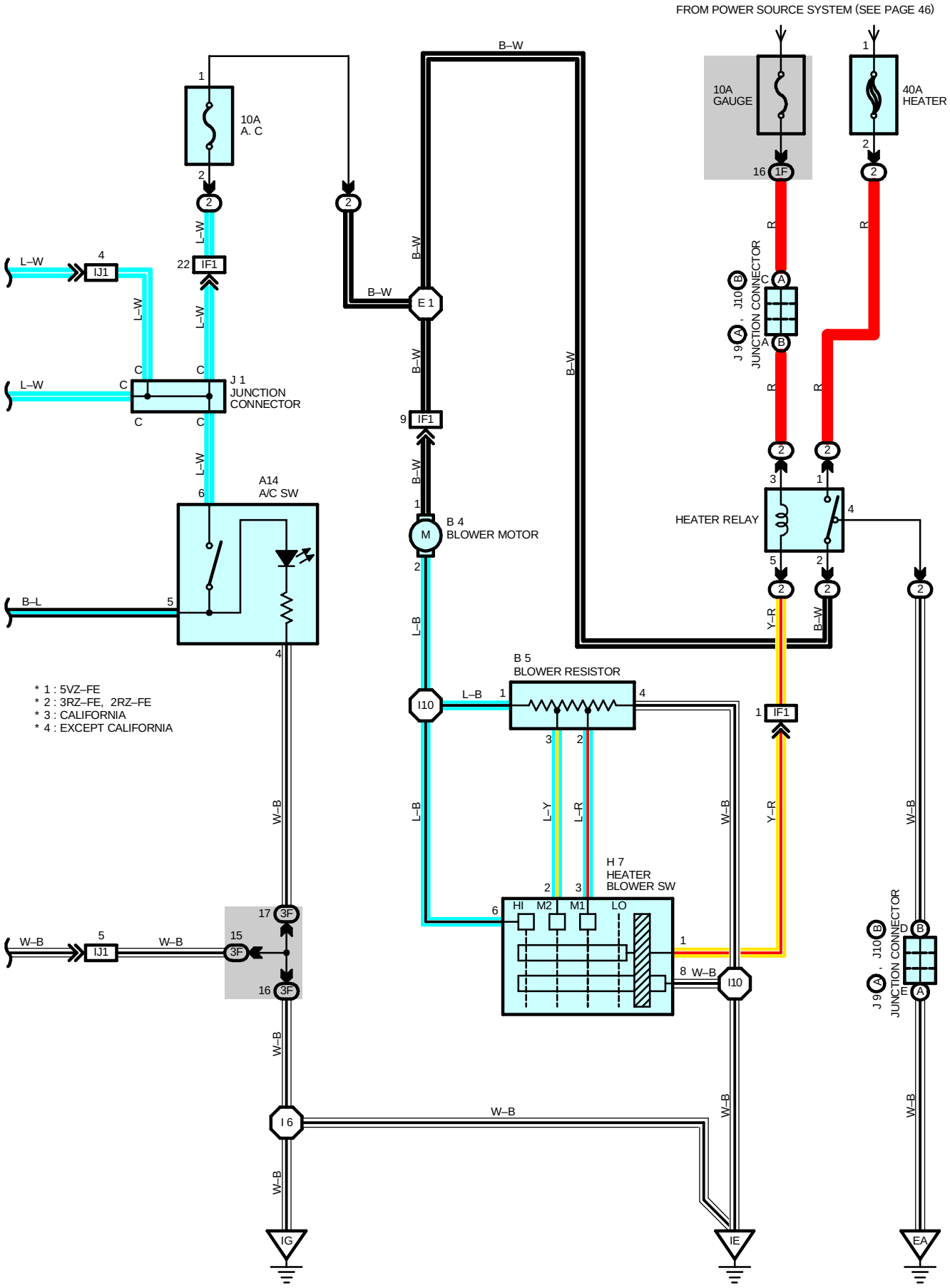
FROM POWER SOURCE SYSTEM (SEE PAGE 46)
10A
A. C
10A
GAUGE
40A
HEATER
B–W
L–W
R
J 1
JUNCTION
CONNECTOR
A14
A/C SW
B–L
B 4
BLOWER MOTOR
B 5
BLOWER RESISTOR
HEATER RELAY
J 9 , J10
JUNCTION CONNECTOR
L–B
L–Y
L–R
Y–R
W–B
H 7
HEATER
BLOWER SW
HI
M2
M1
LO
IJ1
IF1
E 1
I10
3F
I 6
IG
IE
EA
* 1 : 5VZ–FE
* 2 : 3RZ–FE, 2RZ–FE
* 3 : CALIFORNIA
* 4 : EXCEPT CALIFORNIA

SYSTEM OUTLINE

1. HEATER BLOWER MOTOR OPERATION

With the ignition SW on, the current from the GAUGE fuse flows to TERMINAL 3 of the HEATER relay to TERMINAL 5 to TERMINAL 1 of the heater blower SW.

(Low speed operation)

When the heater blower SW is moved to the low speed position, the current applied to TERMINAL 1 of the heater blower SW flows from TERMINAL 8 to GROUND, causing the HEATER relay to come on. Then the current flowing from the HEATER fuse flows to TERMINAL 1 of the HEATER relay to TERMINAL 2 to TERMINAL 1 of the blower motor to TERMINAL 2 to TERMINAL 1 of the blower resistor to TERMINAL 4 to GROUND, causing the blower motor to rotate.

At this time, current flows against the full resistance of the blower resistor, so the motor rotates slowly at low speed.

(Operation at speed M1, M2)

When the heater blower SW is moved to the speed M1 position, the current applied to TERMINAL 1 of the heater blower SW flows to TERMINAL 8 to GROUND, turning the HEATER relay to on. Then, the same as with low speed, current passes from the blower motor to TERMINAL 1 of the blower resistor to TERMINAL 2 to TERMINAL 3 of the heater blower SW to TERMINAL 8 to GROUND. At this time, the resistance of the blower resistor is less than it is for low speed, so the blower motor rotates faster than it does at low speed. With the heater blower SW in the M2 position, current flowing through the motor flows from TERMINAL 1 of the blower resistor to TERMINAL 3 to TERMINAL 2 of the heater blower SW to TERMINAL 8 to GROUND. At this time, the resistance of the blower resistor is less than for speed M1, so the blower motor rotates faster than for speed M1.

(High speed operation)

With the heater blower SW in high speed position, until the HEATER relay comes on and current flows to the blower motor, operation is the same as for speed M1 and M2. The current passing through the blower motor flows to TERMINAL 6 of the heater blower SW to TERMINAL 8 to GROUND without flowing through the blower resistor, so that the blower motor rotates at the fastest speed, high speed.

2. AIR CONDITIONING OPERATION

When the blower SW is set to on, current from the HEATER fuse flows through the HEATER relay (Point side) to A.C fuse to TERMINAL 1 of the A/C dual pressure SW to TERMINAL 2 to TERMINAL 1 of the A/C amplifier. The engine speed signal from igniter and the evaporator temp. signal from the A/C thermistor are all supplied to the A/C amplifier. When the A/C SW is turned on, the A/C SW on signal is sent to activate the A/C amplifier. Current flows from the A/C amplifier to the magnetic clutch, turning the compressor on. The A/C operation is shut off when a signal indicating low evaporator temp., or abnormally high or low refrigerant pressure, is supplied while the engine high speed signal exists. When one of these signals is received, the amplifier shuts off the A/C operation.

SERVICE HINTS

A14 A/C SW

6–GROUND : Approx. **12** volts with ignition SW on and heater blower SW on.
4–GROUND : Always continuity.
6–5 : Closed with A/C SW on.

HEATER RELAY [R/B NO.2]

1–2 : Closed with ignition SW on and blower SW on.

A13 A/C DUAL PRESSURE SW

1–2 : Open with refrigerant pressure at less than approx. **2.0** kgf/cm^2 (**28.4** psi, **196** kpa) or more than approx. **32** kgf/cm^2 (**455** psi, **3138** kpa).

○ : PARTS LOCATION

Code	See Page	Code	See Page	Code	See Page
A5	28 (5VZ–FE)	B4	32	J1	33
	30 (3RZ–FE, 2RZ–FE)	B5	32	J9 A	29 (5VZ–FE)
A12	32	D23	32		31 (3RZ–FE, 2RZ–FE)
A13	32	E5 A	33	J10 B	29 (5VZ–FE)
A14	32	E8 D	33		31 (3RZ–FE, 2RZ–FE)
A15	32	H7	33		

▭ : RELAY BLOCKS

Code	See Page	Relay Blocks (Relay Block Location)
2	21	R/B No.2 (Engine Compartment Left)

: JUNCTION BLOCK AND WIRE HARNESS CONNECTOR

Code	See Page	Junction Block and Wire Harness (Connector Location)
1F	22	Engine Room Main Wire and J/B No.1 (Lower Finish Panel)
3F	24	Cowl Wire and J/B No.3 (Bihind the Instrument Panel Left)
3H	26	Cowl Wire and J/B No.3 (Bihind the Instrument Panel Center)

: CONNECTOR JOINING WIRE HARNESS AND WIRE HARNESS

Code	See Page	Joining Wire Harness and Wire Harness (Connector Location)
IF1	40	Engine Room Main Wire and Cowl Wire (Left Kick Panel)
IJ1	40	Cowl Wire and A/C Sub Wire (Bihind the Glove Box)
IK2	40	Engine Wire and Cowl Wire (Right Kick Panel)
IM1	40	A/C Sub Wire and A/C Wire (Bihind the Glove Box)

: GROUND POINTS

Code	See Page	Ground Points Location
EA	36 (5VZ–FE) 38 (3RZ–FE, 2RZ–FE)	Front Left Fender
IE	40	Around the Right Edge of the Reinforcement
IG	40	Around the Left Edge of the Reinforcement

: SPLICE POINTS

Code	See Page	Wire Harness with Splice Points	Code	See Page	Wire Harness with Splice Points
E1	36 (5VZ–FE) 38 (3RZ–FE, 2RZ–FE)	Cowl Wire	I10	40	Engine Wire
			I12	40	A/C Sub Wire
I6	40				

A/T INDICATOR (2RZ–FE)

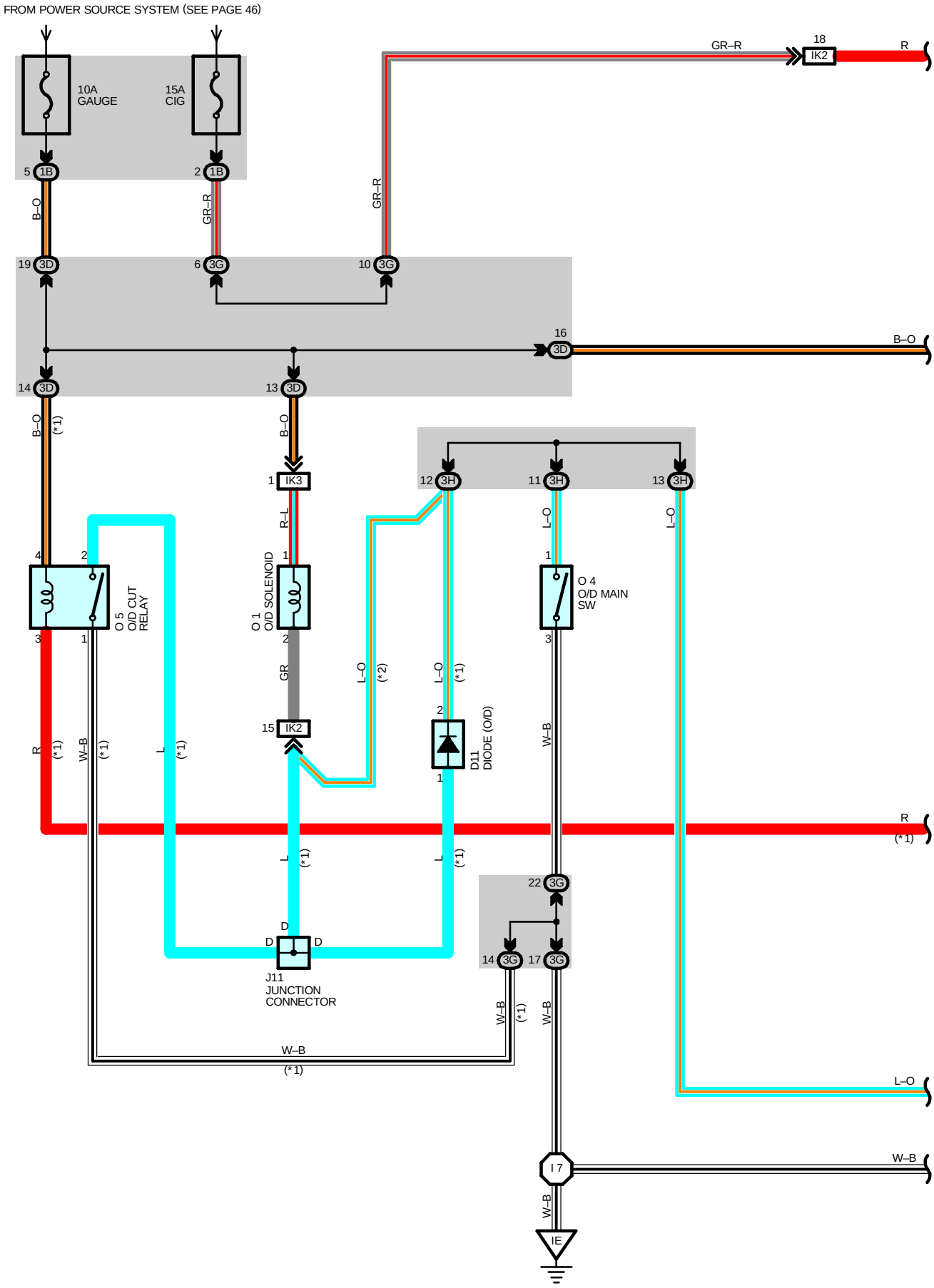

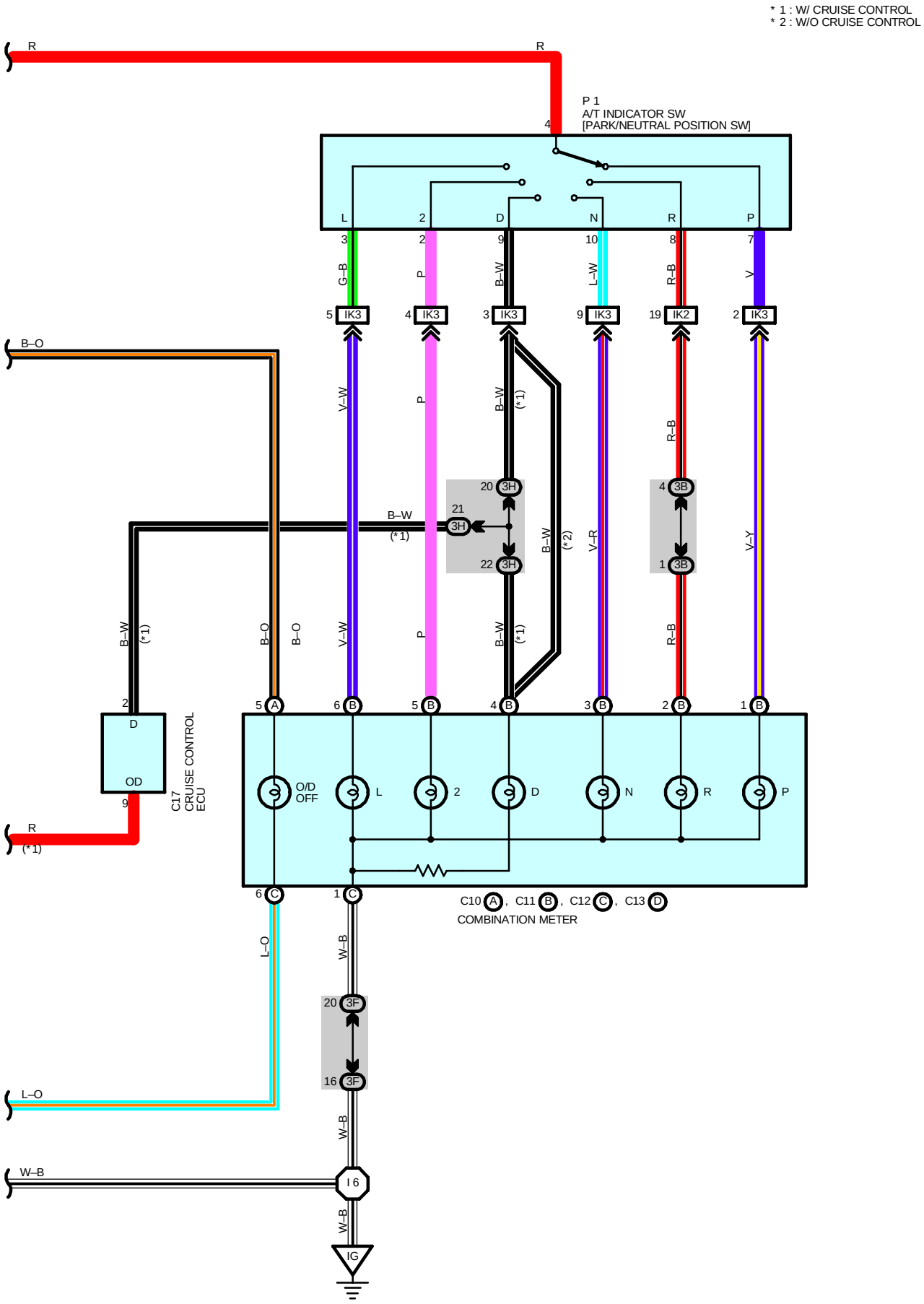
* 1 : W/ CRUISE CONTROL
* 2 : W/O CRUISE CONTROL
P 1
A/T INDICATOR SW
[PARK/NEUTRAL POSITION SW]
L
2
D
N
R
P
IK3
IK2
3H
3B
3F
I 6
C17
CRUISE CONTROL
ECU
O/D
OFF
C10 A , C11 B , C12 C , C13 D
COMBINATION METER
IG

A/T INDICATOR (2RZ–FE)

SERVICE HINTS

O4 O/D MAIN SW

1–3 : Open with O/D main SW at **ON** position
Closed with O/D main SW at **OFF** position

: PARTS LOCATION

Code		See Page	Code	See Page	Code	See Page
C10	A	32	C17	32	O4	33
C11	B	32	D11	32	O5	31 (2RZ–FE)
C12	C	32	J11	33	P1	31 (2RZ–FE)
C13	D	32	O1	31 (2RZ–FE)		

: JUNCTION BLOCK AND WIRE HARNESS CONNECTOR

Code	See Page	Junction Block and Wire Harness (Connector Location)
1B	22	Cowl Wire and J/B No.1 (Lower Finish Panel)
3B	24	Cowl Wire and J/B No.3 (Bihind the Instrument Panel Left)
3D		
3F		
3G	26	Cowl Wire and J/B No.3 (Bihind the Instrument Panel Center)
3H		

: CONNECTOR JOINING WIRE HARNESS AND WIRE HARNESS

Code	See Page	Joining Wire Harness and Wire Harness (Connector Location)
IK2	40	Engine Wire and Cowl Wire (Right Kick Panel)
IK3		

: GROUND POINTS

Code	See Page	Ground Points Location
IE	40	Around the Right Edge of the Reinforcement
IG	40	Around the Left Edge of the Reinforcement

: SPLICE POINTS

Code	See Page	Wire Harness with Splice Points	Code	See Page	Wire Harness with Splice Points
I6	40	Cowl Wire	I7	40	Cowl Wire

BACK–UP LIGHT

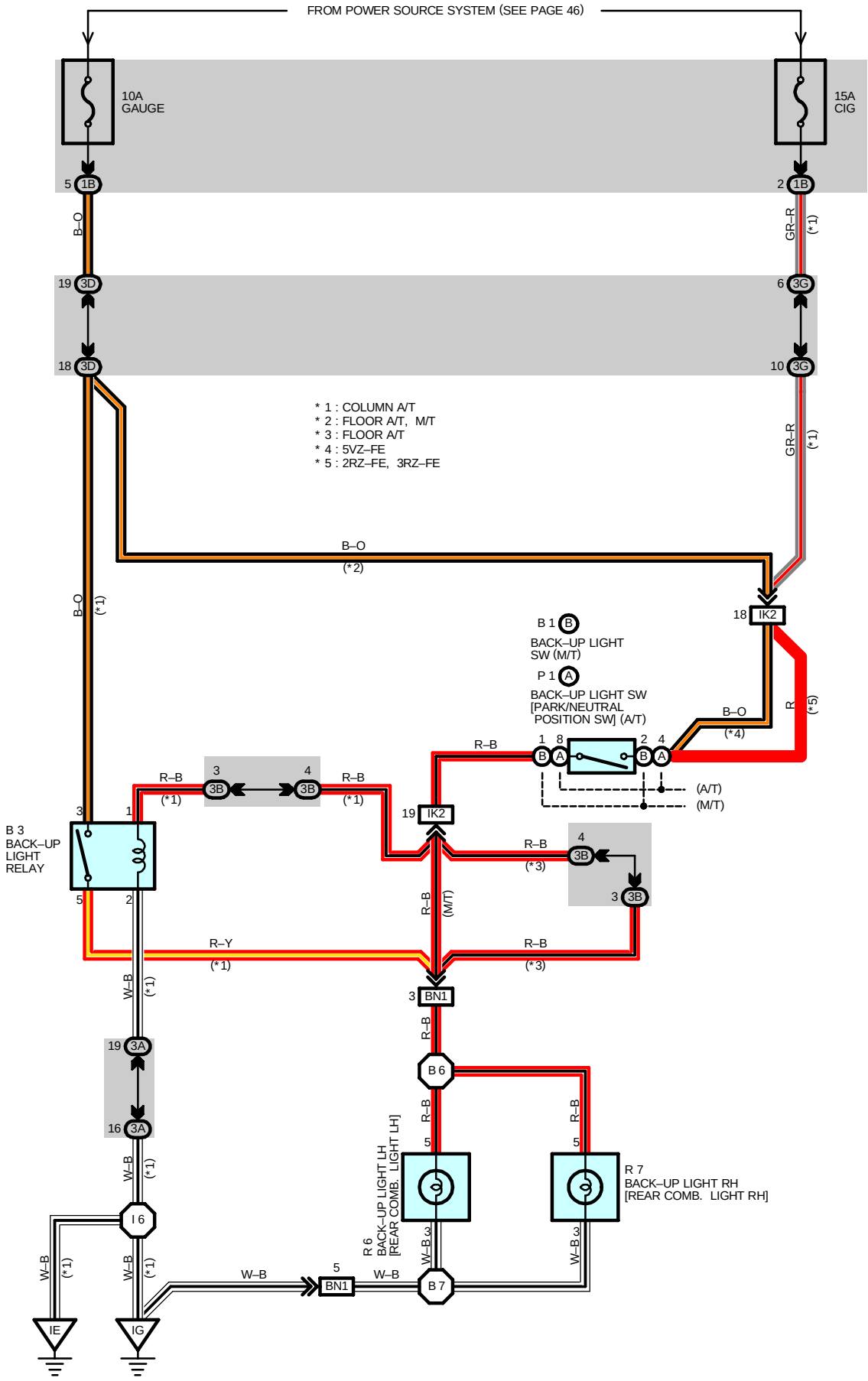

SERVICE HINTS

P1 (A) BACK–UP LIGHT SW [PARK/NEUTRAL POSITION SW] (A/T),

B1 (B) BACK–UP LIGHT SW (M/T)

(A) 4–(A) 8, (B) 2–(B) 1 : Closed with shift lever in **R** position

B3 BACK–UP LIGHT RELAY

5–3 : Closed with Park/Neutral position SW at **R** position and ignition SW at **ON** position (Column A/T)

: PARTS LOCATION

Code		See Page	Code		See Page	Code	See Page
B1	B	28 (5VZ–FE)	P1	A	29 (5VZ–FE)	R7	34
		30 (3RZ–FE, 2RZ–FE)			31 (3RZ–FE, 2RZ–FE)		
B3		32	R6		34		

: JUNCTION BLOCK AND WIRE HARNESS CONNECTOR

Code	See Page	Junction Block and Wire Harness (Connector Location)
1B	22	Cowl Wire and J/B No.1 (Lower Finish Panel)
3A	24	Cowl Wire and J/B No.3 (Bihind the Instrument Panel Left)
3B		
3D		
3G	26	Cowl Wire and J/B No.3 (Bihind the Instrument Panel Center)

: CONNECTOR JOINING WIRE HARNESS AND WIRE HARNESS

Code	See Page	Joining Wire Harness and Wire Harness (Connector Location)
IK2	40	Engine Wire and Cowl Wire (Right Kick Panel)
BN1	42	Frame Wire and Cowl Wire (Under the Driver's Seat)

: GROUND POINTS

Code	See Page	Ground Points Location
IE	40	Around the Right Edge of the Reinforcement
IG	40	Around the Left Edge of the Reinforcement

: SPLICE POINTS

Code	See Page	Wire Harness with Splice Points	Code	See Page	Wire Harness with Splice Points
I6	40	Cowl Wire	B7	42	Frame Wire
B6	42	Frame Wire			

CIGARETTE LIGHTER AND CLOCK

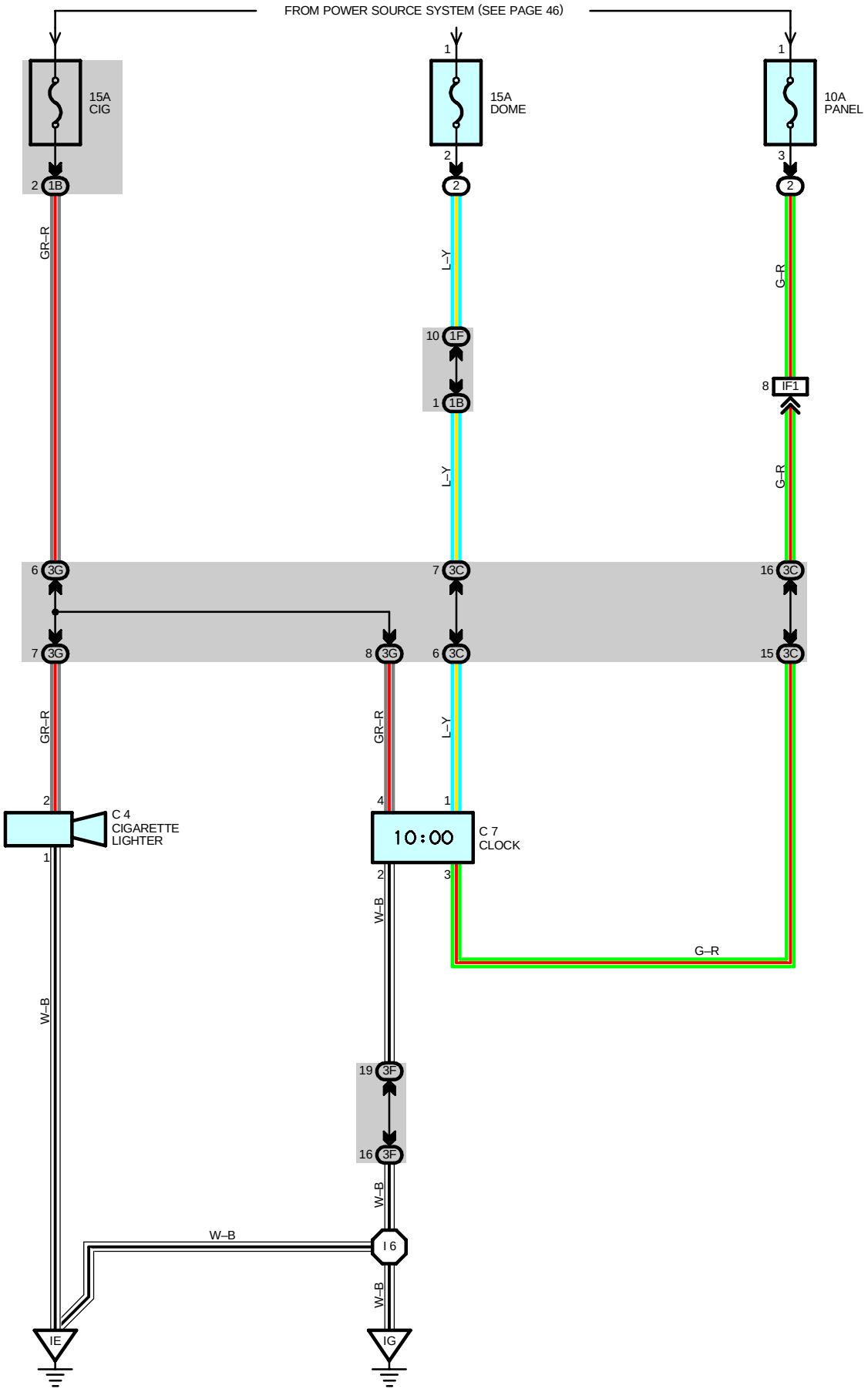

SERVICE HINTS

C4 CIGARETTE LIGHTER

2–GROUND : Approx. **12** volts with ignition SW at **ON** and **ACC** position
1–GROUND : Always continuity

C7 CLOCK

1–GROUND : Always approx. **12** volts (Power for clock)
4–GROUND : Approx. **12** volts with ignition SW at **ON** or **ACC** position (Power for indication)
3–GROUND : Approx. **12** volts with light control SW at **TAIL** or **HEAD** position (Signal of indication)
2–GROUND : Always continuity

: PARTS LOCATION

Code	See Page	Code	See Page	Code	See Page
C4	32	C7	32		

: RELAY BLOCKS

Code	See Page	Relay Blocks (Relay Block Location)
2	21	R/B No.2 (Engine Compartment Left)

: JUNCTION BLOCK AND WIRE HARNESS CONNECTOR

Code	See Page	Junction Block and Wire Harness (Connector Location)
1B	22	Cowl Wire and J/B No.1 (Lower Finish Panel)
1F	22	Engine Room Main Wire and J/B No.1 (Lower Finish Panel)
3C	24	Cowl Wire and J/B No.3 (Bihind the Instrument Panel Left)
3F		
3G	26	Cowl Wire and J/B No.3 (Bihind the Instrument Panel Center)

: CONNECTOR JOINING WIRE HARNESS AND WIRE HARNESS

Code	See Page	Joining Wire Harness and Wire Harness (Connector Location)
IF1	40	Engine Room Main Wire and Cowl Wire (Left Kick Panel)

: GROUND POINTS

Code	See Page	Ground Points Location
IE	40	Around the Right Edge of the Reinforcement
IG	40	Around the Left Edge of the Reinforcement

: SPLICE POINTS

Code	See Page	Wire Harness with Splice Points	Code	See Page	Wire Harness with Splice Points
I6	40	Cowl Wire			

COMBINATION METER (w/ TACHOMETER)

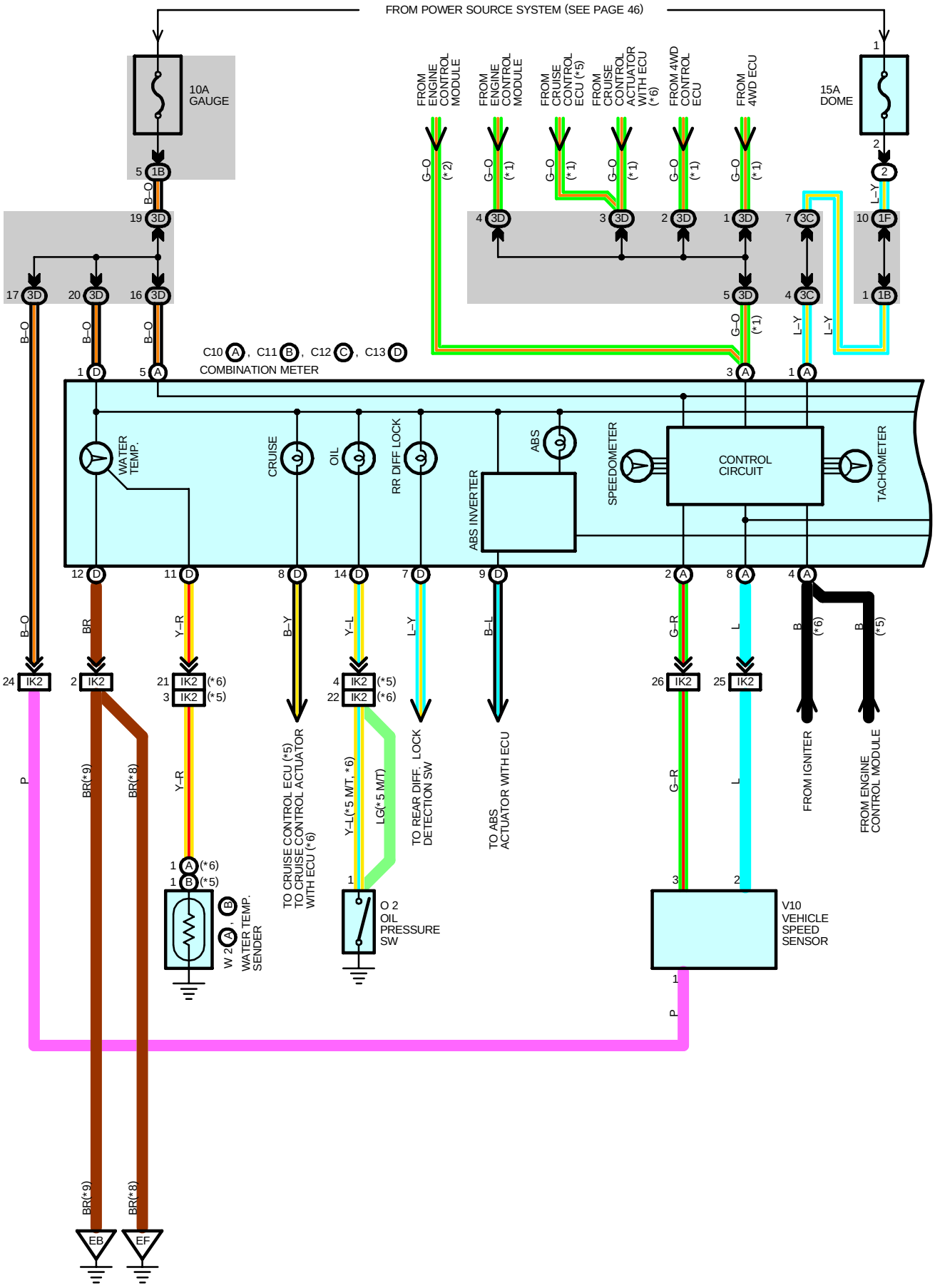

* 1 : W/ CRUISE CONTROL
* 2 : W/O CRUISE CONTROL
* 3 : COLUMN A/T
* 4 : FLOOR A/T
* 5 : 3RZ–FE, 2RZ–FE
* 6 : 5VZ–FE
* 7 : W/ FUEL LEVEL WARNING
* 8 : CALIFORNIA 3RZ–FE AND 2RZ–FE
* 9 : EXCEPT *8

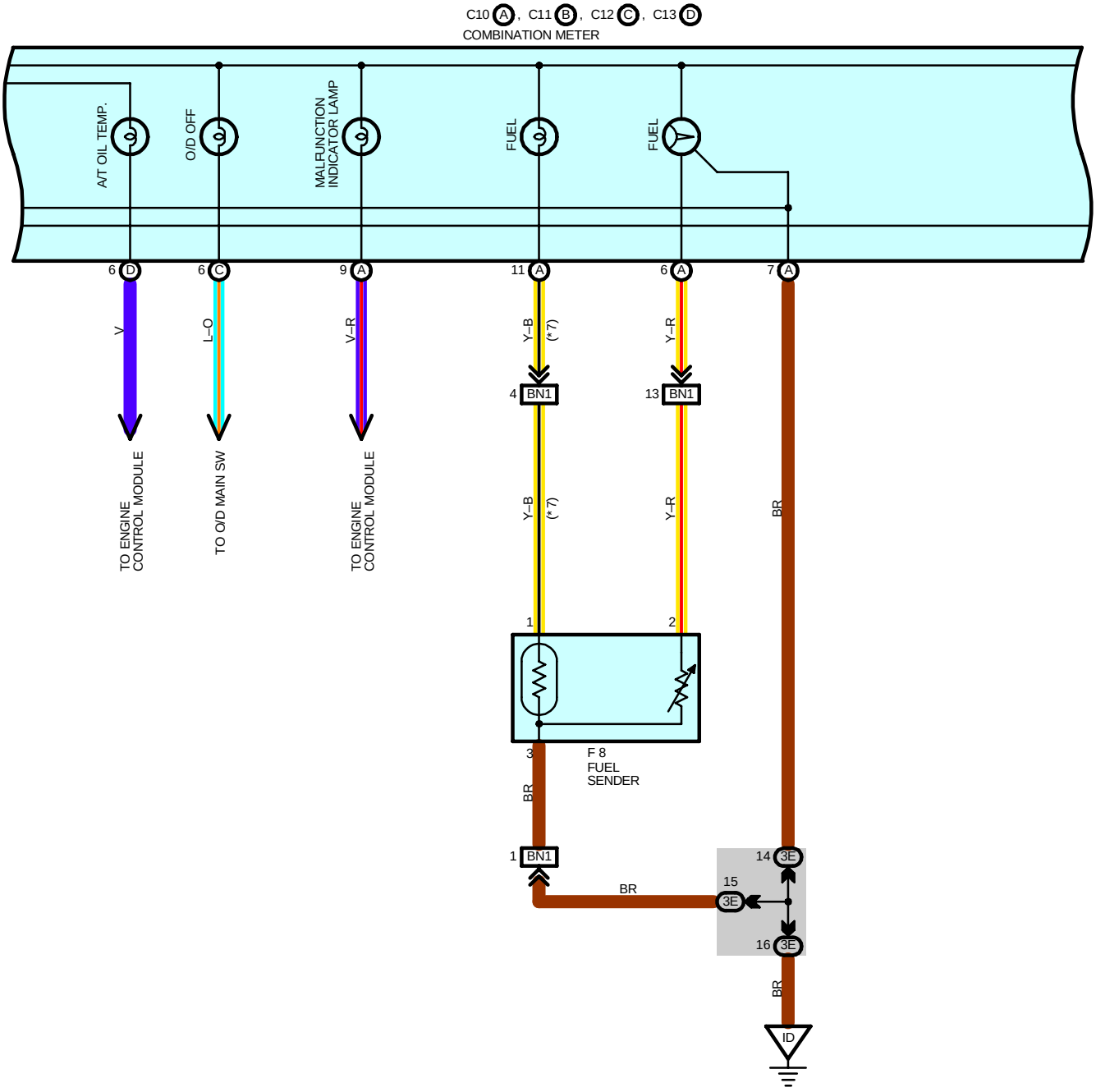

COMBINATION METER (w/ TACHOMETER)

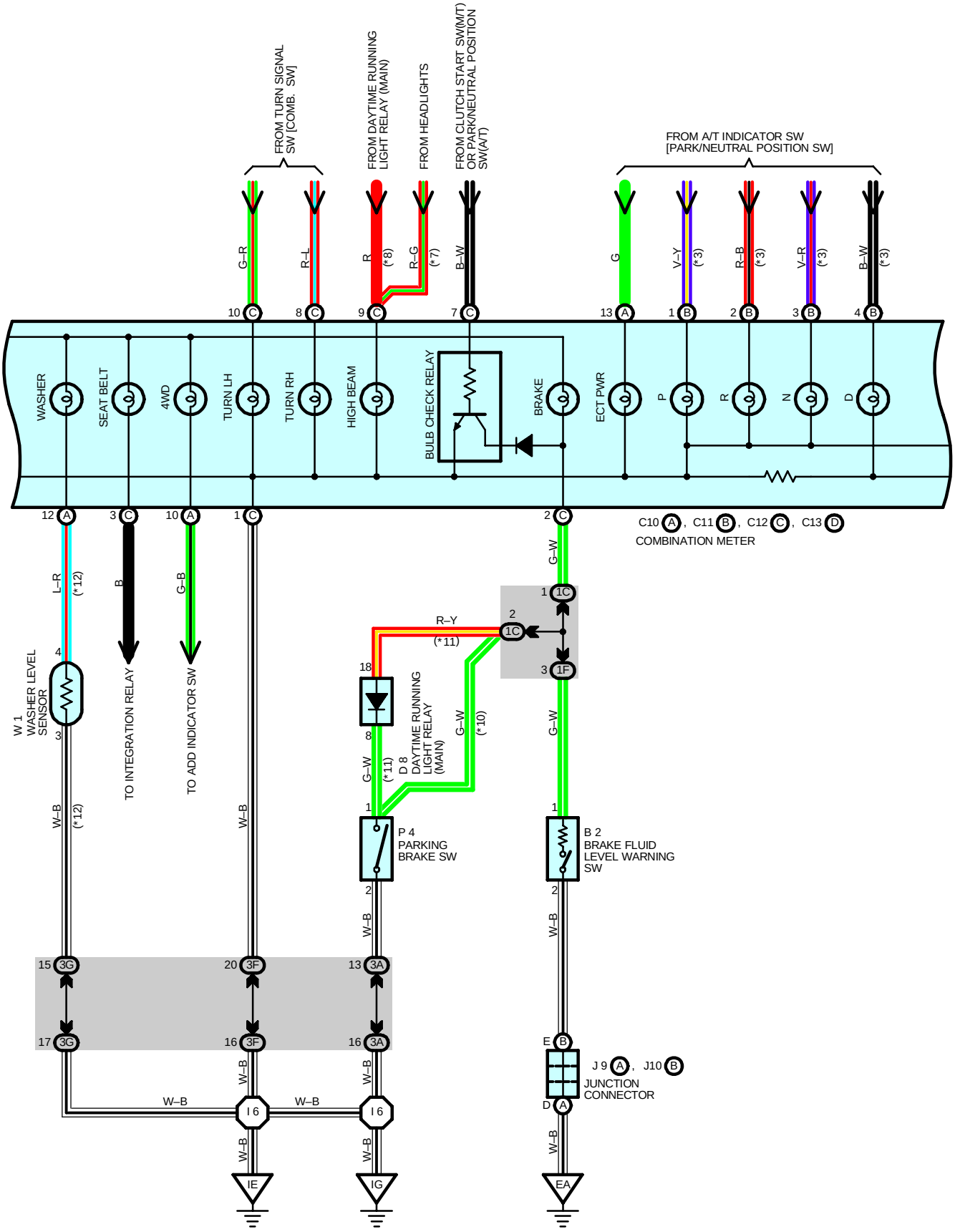

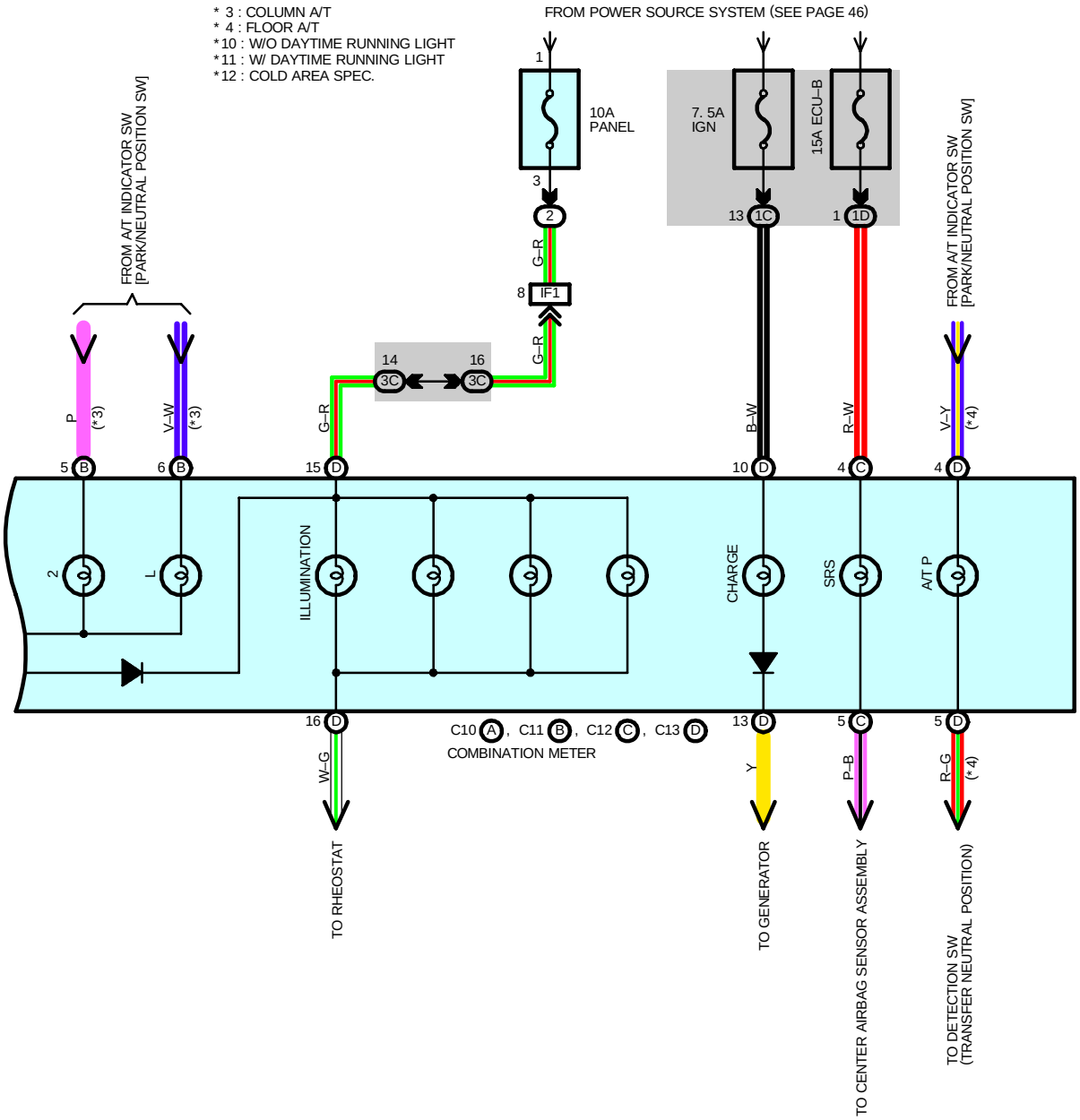
* 3 : COLUMN A/T
* 4 : FLOOR A/T
*10 : W/O DAYTIME RUNNING LIGHT
*11 : W/ DAYTIME RUNNING LIGHT
*12 : COLD AREA SPEC.
FROM POWER SOURCE SYSTEM (SEE PAGE 46)
FROM A/T INDICATOR SW [PARK/NEUTRAL POSITION SW]
10A PANEL
7. 5A IGN
15A ECU–B
G–R
IF1
P
V–W
(*3)
G–R
B–W
R–W
V–Y
(*4)
ILLUMINATION
CHARGE
SRS
A/T P
W–G
Y
P–B
R–G
C10 A , C11 B , C12 C , C13 D
COMBINATION METER
TO RHEOSTAT
TO GENERATOR
TO CENTER AIRBAG SENSOR ASSEMBLY
TO DETECTION SW (TRANSFER NEUTRAL POSITION)

COMBINATION METER (w/ TACHOMETER)

SERVICE HINTS

B2 BRAKE FLUID LEVEL WARNING SW

1–2 : Closed with float down

C10 (A), C12 (C), C13 (D) COMBINATION METER

(A) 5, (D)1–GROUND : Approx. **12** volts with ignition SW on

(A) 7, (C) 1, (D)12–GROUND : Always continuity

P4 PARKING BRAKE SW

1–2 : Closed with parking brake lever pulled up

: PARTS LOCATION

Code		See Page	Code		See Page	Code		See Page
B2		28 (5VZ–FE)	J9	A	29 (5VZ–FE)	V10		31 (3RZ–FE, 2RZ–FE)
		30 (3RZ–FE, 2RZ–FE)			31 (3RZ–FE, 2RZ–FE)	W1		29 (5VZ–FE)
C10	A	32	J10	B	29 (5VZ–FE)			31 (3RZ–FE, 2RZ–FE)
C11	B	32			31 (3RZ–FE, 2RZ–FE)	W2	A	29 (5VZ–FE)
C12	C	32	O2		29 (5VZ–FE)			31 (3RZ–FE, 2RZ–FE)
C13	D	32			31 (3RZ–FE, 2RZ–FE)		B	29 (5VZ–FE)
D8		32	P4		33			31 (3RZ–FE, 2RZ–FE)
F8		34	V10		29 (5VZ–FE)			

: RELAY BLOCKS

Code	See Page	Relay Blocks (Relay Block Location)
2	21	R/B No.2 (Engine Compartment Left)

: JUNCTION BLOCK AND WIRE HARNESS CONNECTOR

Code	See Page	Junction Block and Wire Harness (Connector Location)
1B	22	Cowl Wire and J/B No.1 (Lower Finish Panel)
1C		
1D		
1F	22	Engine Room Main Wire and J/B No.1 (Lower Finish Panel)
3A	24	Cowl Wire and J/B No.3 (Bihind the Instrument Panel Left)
3C		
3D		
3E		
3F		
3G	26	Cowl Wire and J/B No.3 (Bihind the Instrument Panel Center)

: CONNECTOR JOINING WIRE HARNESS AND WIRE HARNESS

Code	See Page	Joining Wire Harness and Wire Harness (Connector Location)
IF1	40	Engine Room Main Wire and Cowl Wire (Left Kick Panel)
IK2	40	Engine Wire and Cowl Wire (Right Kick Panel)
BN1	42	Frame Wire and Cowl Wire (Under the Driver's Seat)

: GROUND POINTS

Code	See Page	Ground Points Location
EA	36 (5VZ–FE)	Front Left Fender
	38 (3RZ–FE, 2RZ–FE)	
EB	36 (5VZ–FE)	Under the Data Link Connector 1
	38 (3RZ–FE, 2RZ–FE)	Near the Throttle Body
EF	38 (3RZ–FE)	Ignition Coil Braket
ID	40	Left Kick Panel
IE	40	Around the Right Edge of the Reinforcement
IG	40	Around the Left Edge of the Reinforcement

: **SPLICE POINTS**

Code	See Page	Wire Harness with Splice Points	Code	See Page	Wire Harness with Splice Points
I6	40	Cowl Wire			

K CONNECTOR LIST

A5
GRAY



A6
GRAY

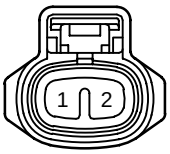

A7
GRAY



A8
GRAY



A9
BLACK

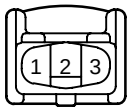

A12

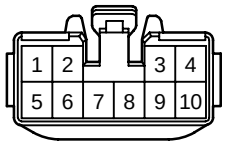

A13



A14
BLACK



A15

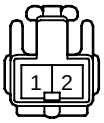

A16

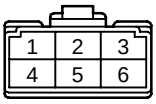

A18
YELLOW

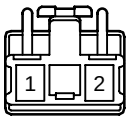

A19
BLACK



A20

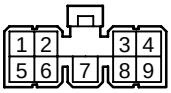

A21
YELLOW

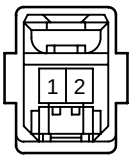

A22
BLACK

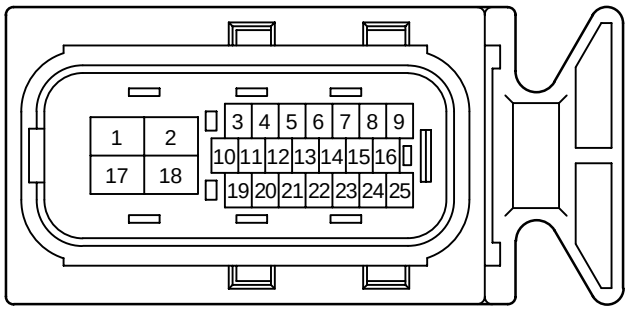

A23
DARK GRAY

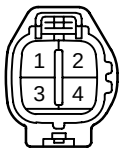

B1
GRAY

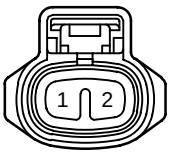

B2
GRAY



B3

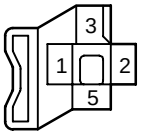

B4
BLACK

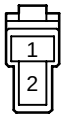

B5
BLACK



B6

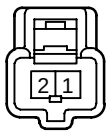

C1
BLACK



C2
(2RZ–FE, 3RZ–FE) DARK GRAY

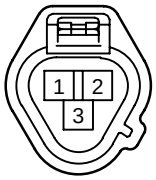

C2
(5VZ–FE) BLACK



C3
BLACK



C4



C5

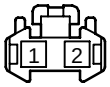

C6
DARK GRAY

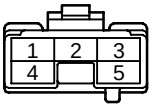

C7

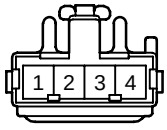

C8
GRAY

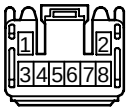

C9

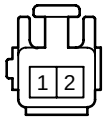

C10
BROWN

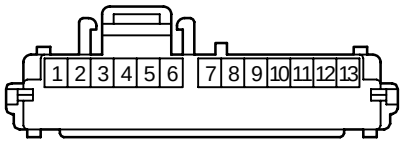

C11
GRAY

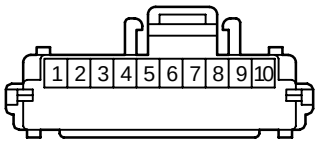

C12
BLUE

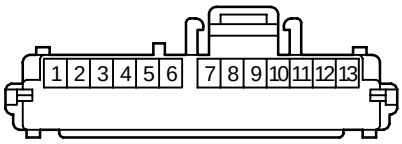

C13

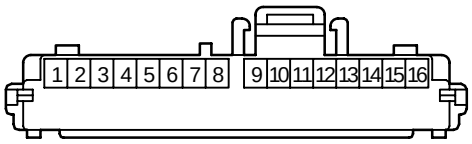

C14

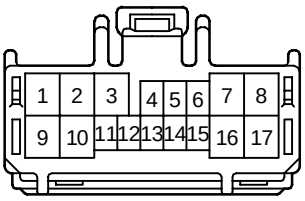

C15
BLACK

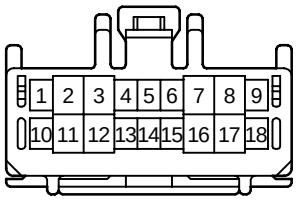

C16

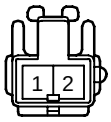

C17
GREEN

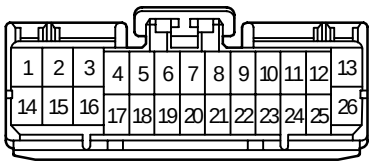

C18
BLACK

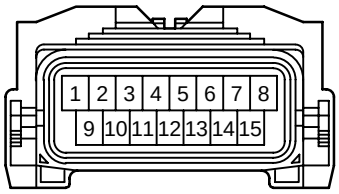

C19
BLACK

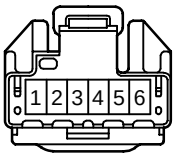

C20
YELLOW

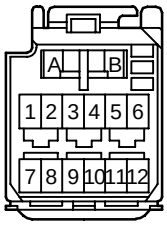

C21
YELLOW

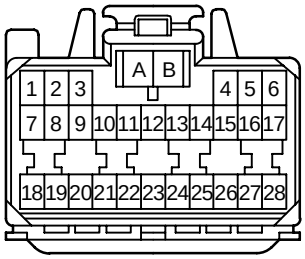

C22
YELLOW

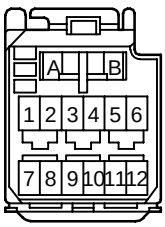

D1
(2RZ–FE, 3RZ–FE) BLACK

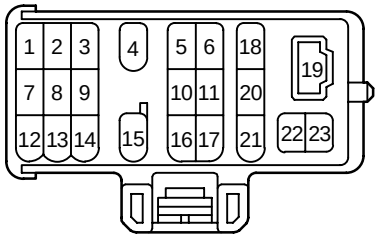

D1
(5VZ–FE) BLACK

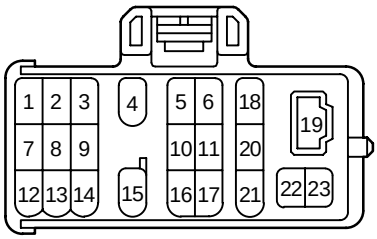

D2
GRAY

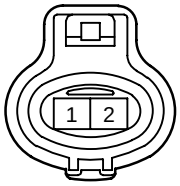

D3
BLUE

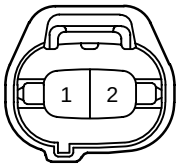

D4
GRAY

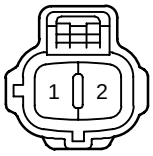

D5
(w/ 2–4 Select SW) GRAY

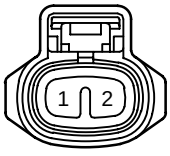

D5
(w/o 2–4 Select SW) BLUE

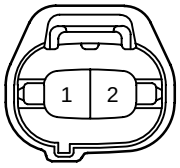

D7
BLACK

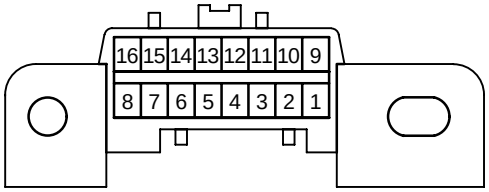

K CONNECTOR LIST

∗ 1 : Except California 2RZ–FE and 3RZ–FE
∗ 2 : Except California 5VZ–FE
∗ 3 : California

D8
GRAY

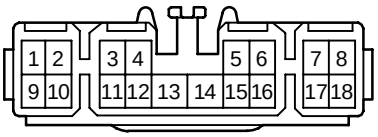

D9

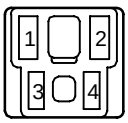

D11
BLACK



D13
BLACK



D14
BLACK



D15



D16



D18
BLUE

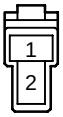

D19
BLUE

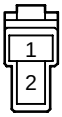

D20

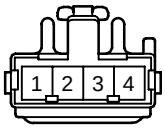

D21
GRAY

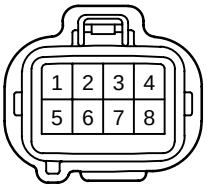

D22
GRAY

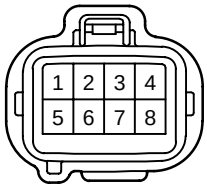

D23

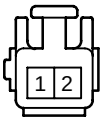

D24

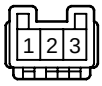

E1
DARK GRAY



E2
BLACK

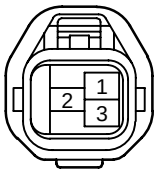

E3
DARK GRAY



E4
BLACK



E5
(∗ 1)

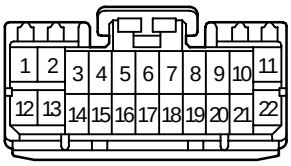

E5
(∗ 2)

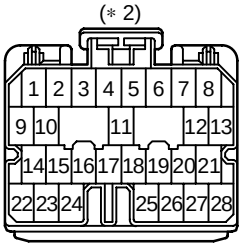

E5
(∗ 3)

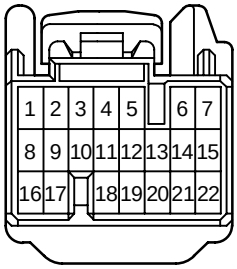

E6
(∗ 1)

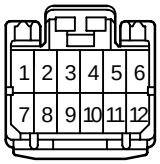

E6
(∗ 2)

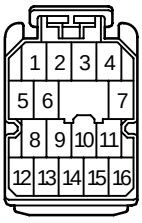

E6
(∗ 3)

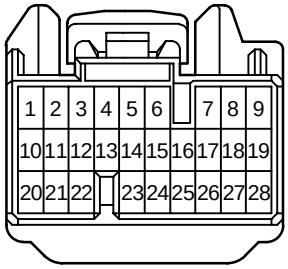

E7
(∗ 1)

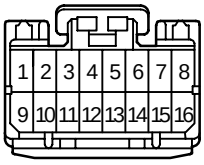

E7
(∗ 2)

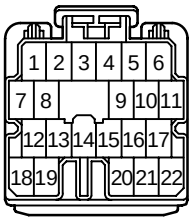

∗ 1 : Except California 2RZ–FE and 3RZ–FE
∗ 2 : Except California 5VZ–FE
∗ 3 : California

E7
(∗ 3)

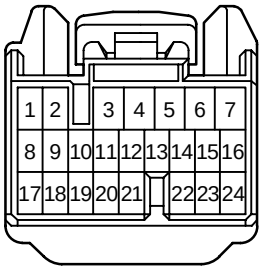

E8
(∗ 1)

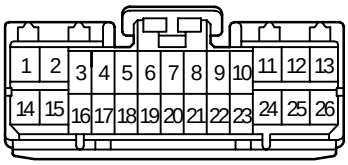

E8
(∗ 2)

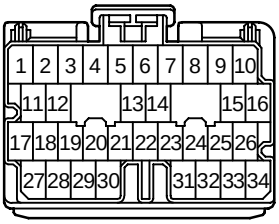

E8
(∗ 3)

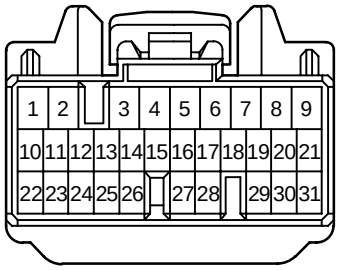

F1
GRAY



F2
GRAY



F3
GRAY

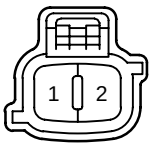

F4
GRAY

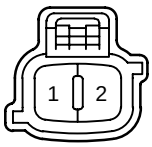

F5

(See Page 22)

F6

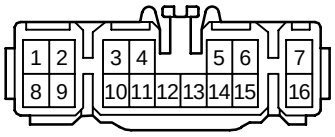

F7

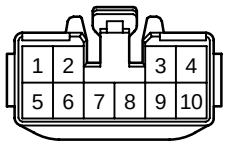

F8
DARK GRAY



F9
YELLOW

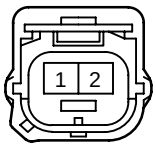

F10
YELLOW

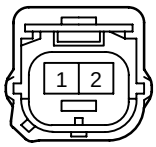

G1

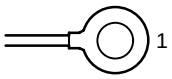

G2
BLACK

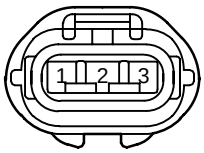

G3



H1
BLACK

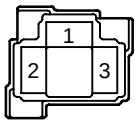

H2
BLACK

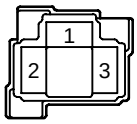

H3
DARK GRAY



H4
DARK GRAY

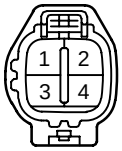

H5
BLACK

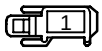

H6
BLACK

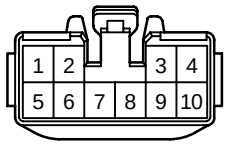

H7
BLACK

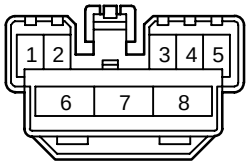

H8

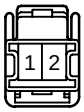

H9
DARK GRAY

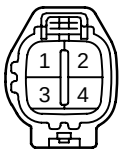

I1
(2RZ–FE, 3RZ–FE) BLACK

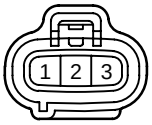

I1
(5VZ–FE) GRAY



K CONNECTOR LIST

I2
BLACK

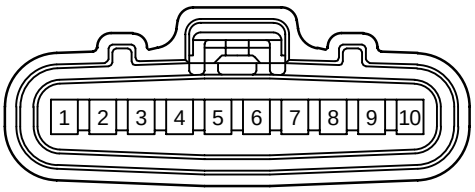

I3
BLACK

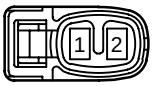

I4
BLACK

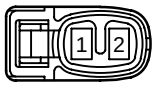

I5
BLACK

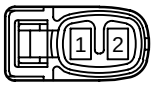

I6
(2RZ–FE, 3RZ–FE) BLUE



I6
(5VZ–FE) BROWN



I7
(2RZ–FE, 3RZ–FE) BLUE



I7
(5VZ–FE) BROWN



I8
(2RZ–FE, 3RZ–FE) BLUE



I8
(5VZ–FE) BROWN



I9
(2RZ–FE, 3RZ–FE) BLUE



I9
(5VZ–FE) BROWN



I10
BROWN



I11
BROWN



I13

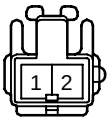

I14

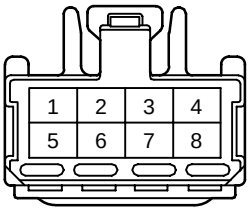

I15

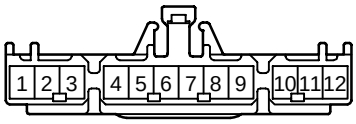

I16
(Extra Cab)



I16
(Regular Cab)

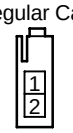

I17
BLACK



I18
BLACK



I19

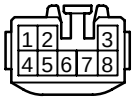

I20
BLACK

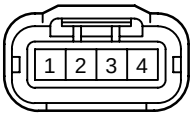

I21
BLACK

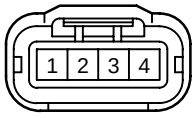

I22
BLACK

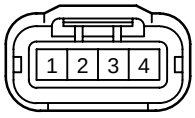

I23
BLACK

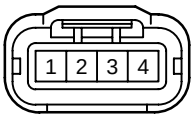

J1
GRAY

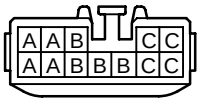

J9
GRAY

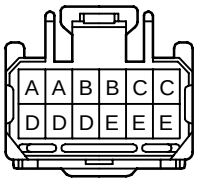

J10

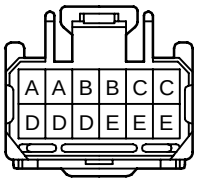

J11
BLUE

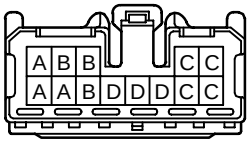

J12
DARK GRAY

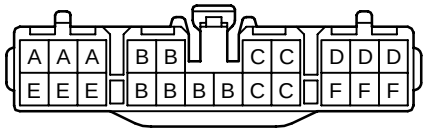

K1
DARK GRAY



K2
BLACK



K3
BLACK



L1



L2



M1
BLACK

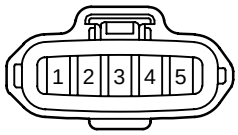

N1
GRAY

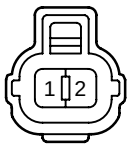

O1
GRAY

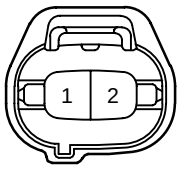

O2
GRAY



O4

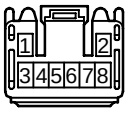

O5
GRAY

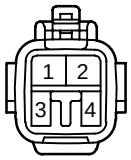

P1
GRAY

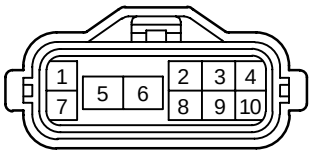

P2
GRAY

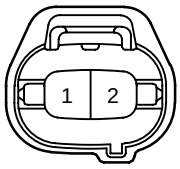

P3
GRAY

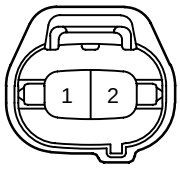

P4

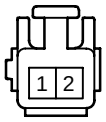

P5



P6

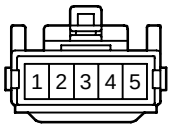

P7

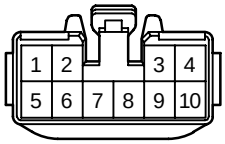

P8

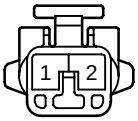

P9

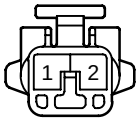

P10
BLACK



P13
GRAY



P14
GRAY



P15

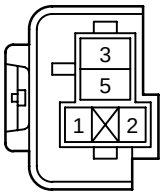

P19

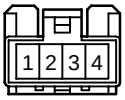

P20
YELLOW

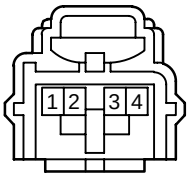

P21
YELLOW

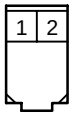

P22
YELLOW

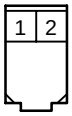

R1
BLUE

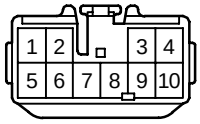

R2
(2Speaker) BLUE



R2
(4Speaker)



R3

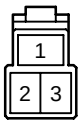

R4
BLACK

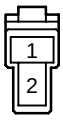

R6

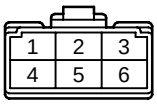

R7

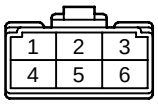

R8



R9



R10

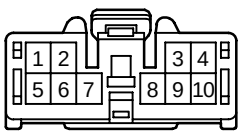

R11
GRAY

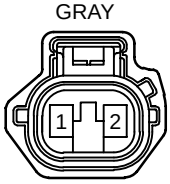

R12
GRAY

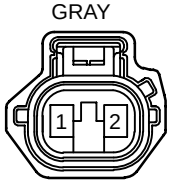

K CONNECTOR LIST

R13
GRAY

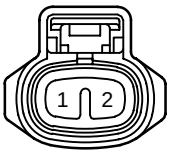

R14
GRAY

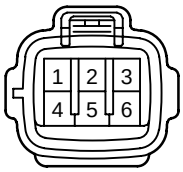

R15



S1
BLACK



S2

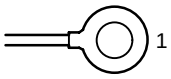

S3
GRAY

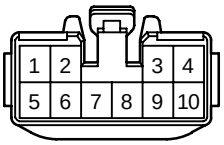

S4

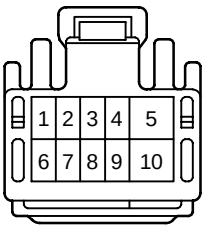

S5
(w/o Cruise Control) BLACK

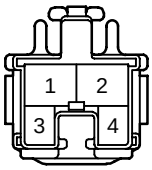

S5
(w/ Cruise Control)

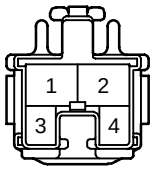

S6

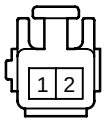

S7

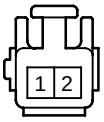

S8

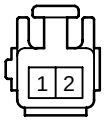

S9

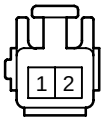

T1
BLACK



T2
GRAY



T3



U1
(M/T) BLUE

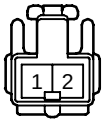

U1
(A/T)

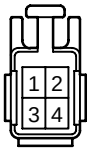

V1
BLACK

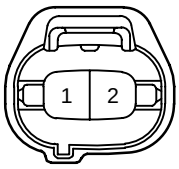

V3
GREEN



V4
BLACK

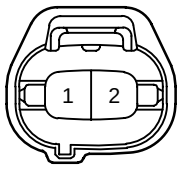

V6
BROWN

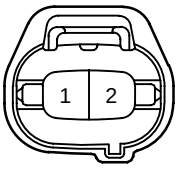

V7
BLUE

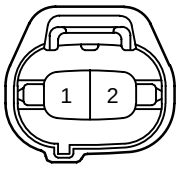

V8
BLACK



V9
BLUE

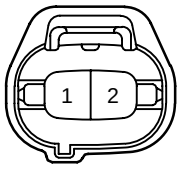

V10
BLACK



W1
GRAY



W2
(2RZ–FE, 3RZ–FE) GRAY



W2
(5VZ–FE) GRAY



W3
BLACK

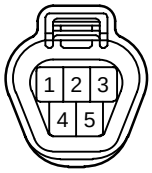

▭ : Location of Connector Joining Wire Harness and Wire Harness

▽ : Location of Ground Points

[5VZ–FE]

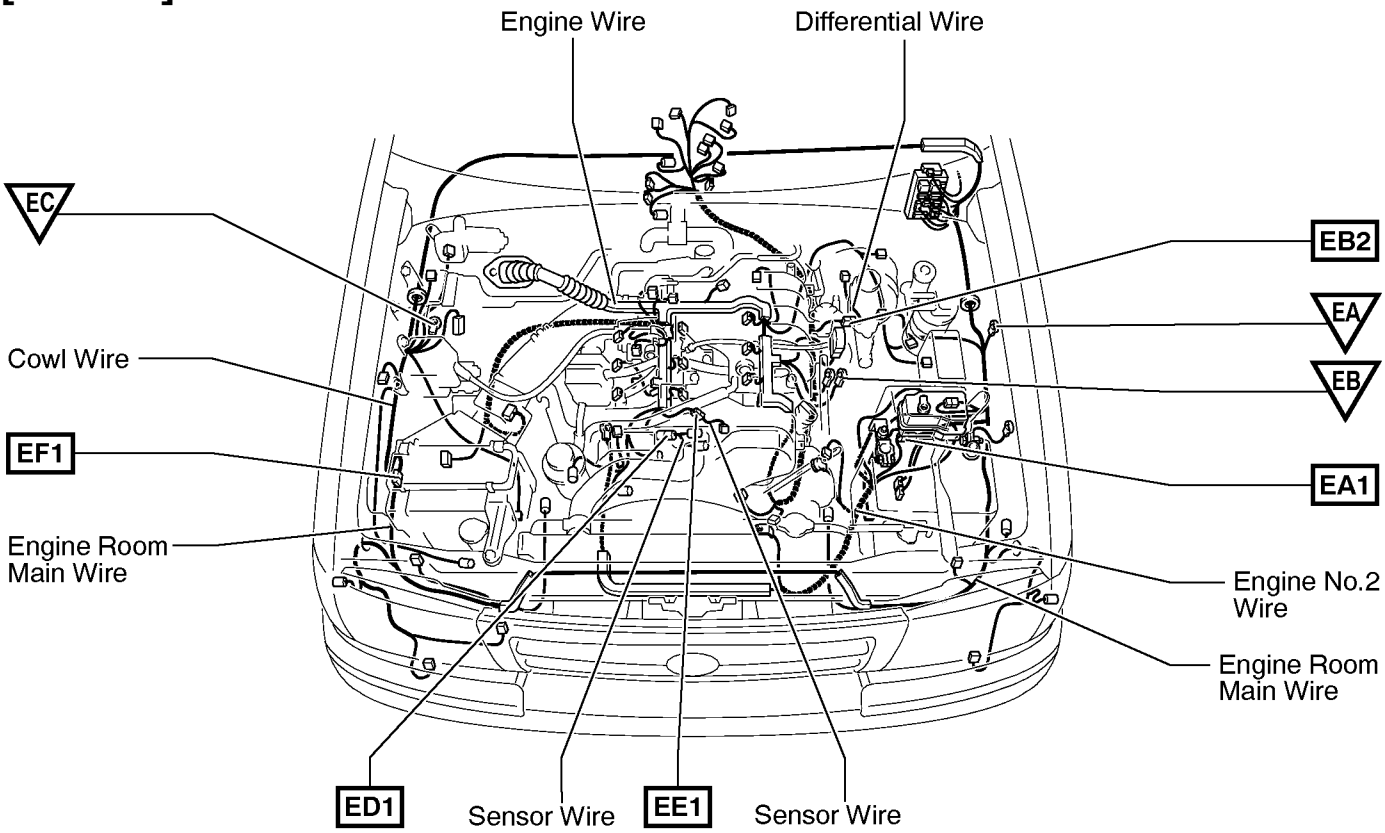

⬡ : Location of Splice Points

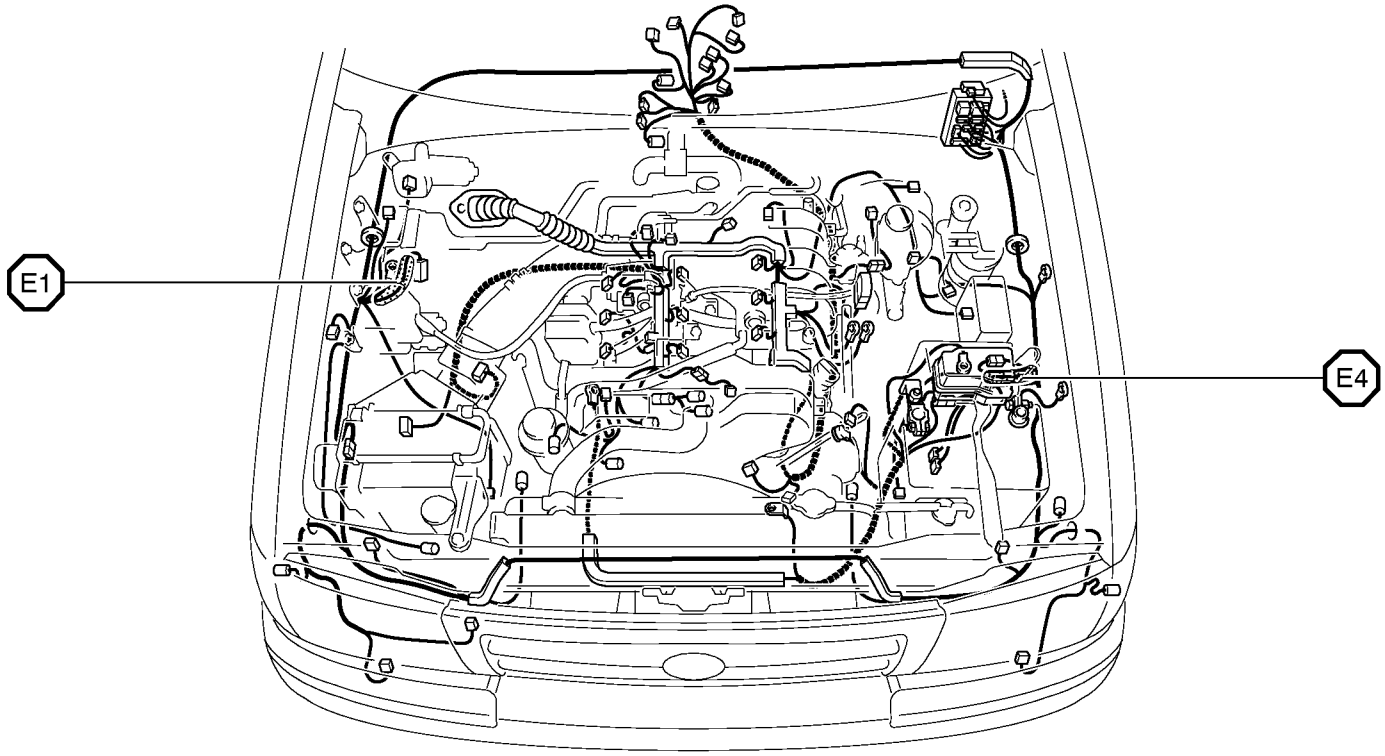

Connector Joining Wire Harness and Wire Harness

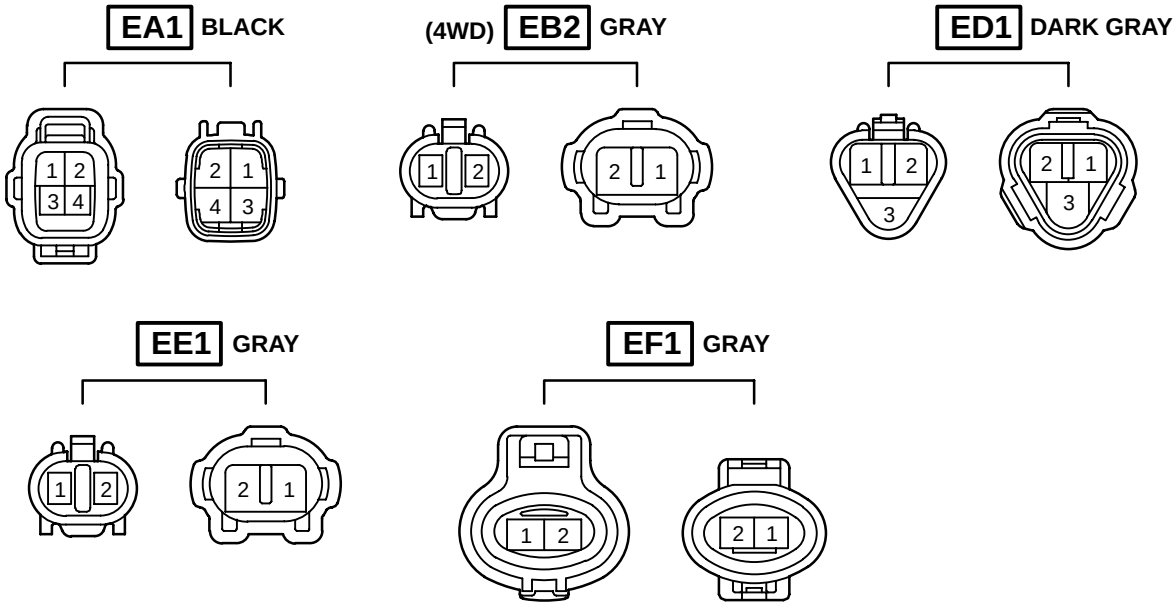

Code	Joining Wire Harness and Wire Harness (Connector Location)
EA1	Engine Room Main Wire and Engine No.2 Wire (Near the Battery)
EB2	Engine Wire and Differential Wire (Front Differential Upper Side)
ED1	Sensor Wire and Engine Wire (Over the Cylinder Head)
EE1	Engine Wire and Sensor Wire (Over the Cylinder Head)
EF1	Cowl Wire and Engine Room Main Wire (Right Fender)

: Location of Connector Joining Wire Harness and Wire Harness
: Location of Ground Points

[3RZ–FE, 2RZ–FE]

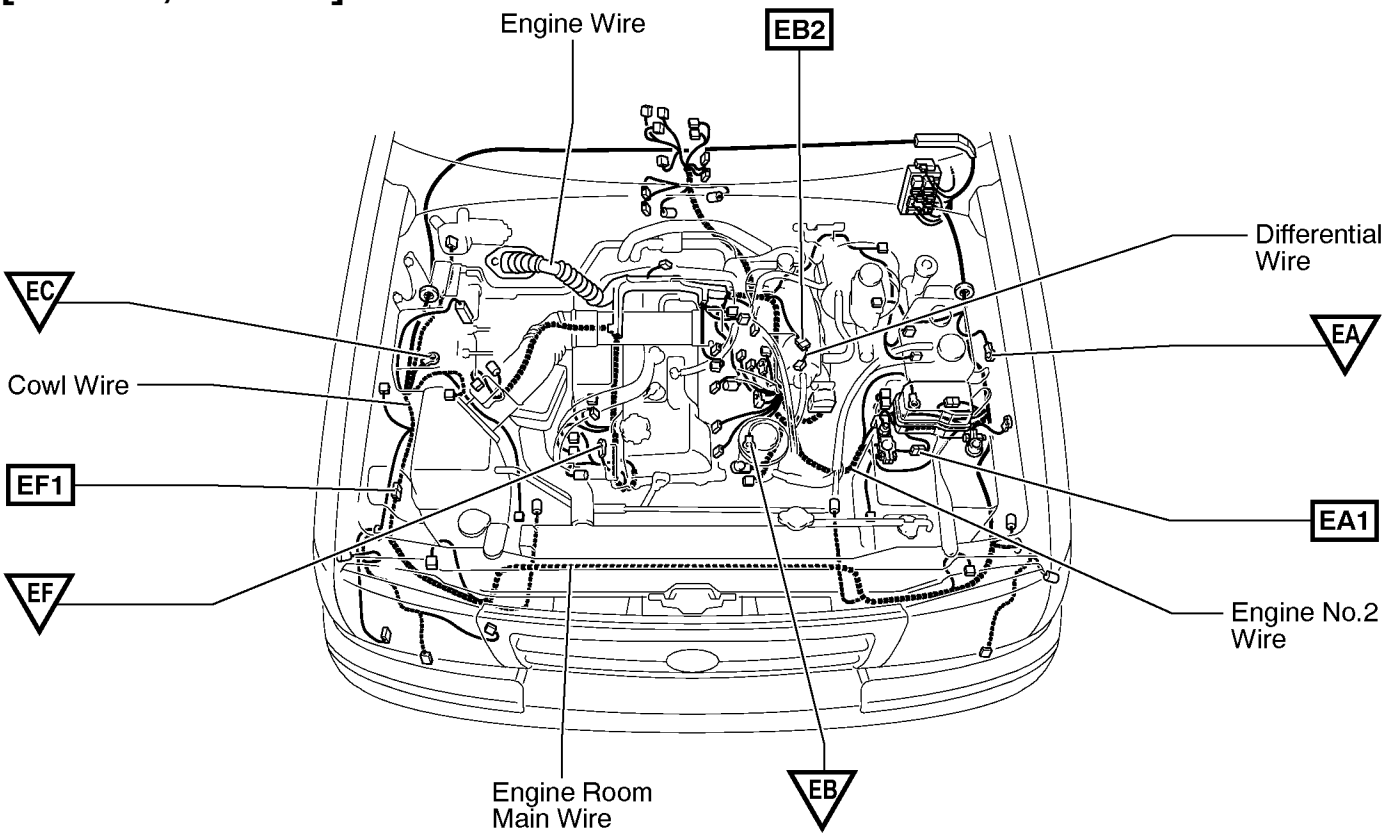

: Location of Splice Points

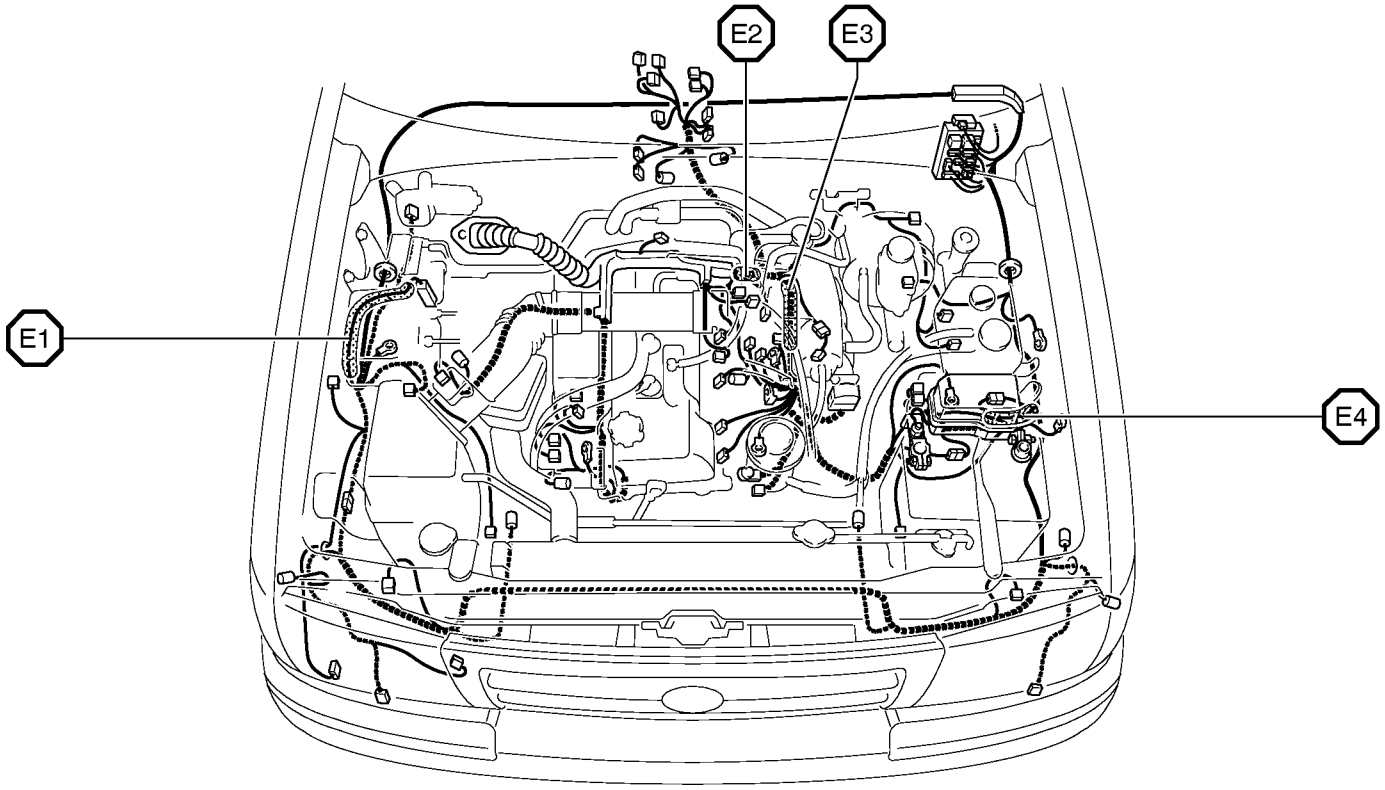

Connector Joining Wire Harness and Wire Harness

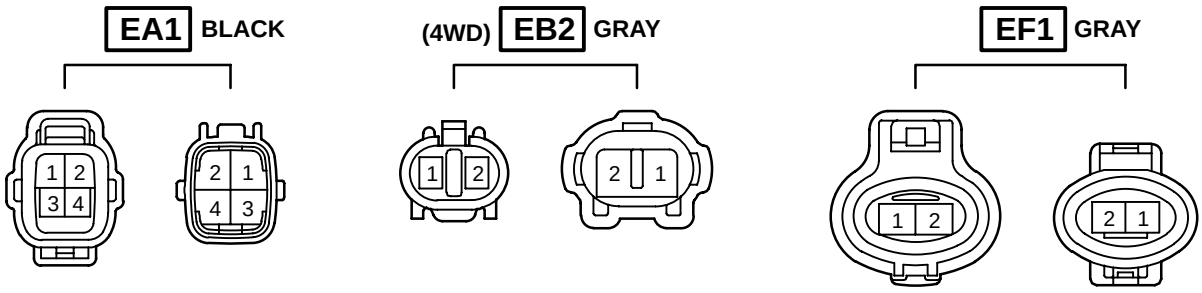

Code	Joining Wire Harness and Wire Harness (Connector Location)
EA1	Engine Room Main Wire and Engine No.2 Wire (Near the Battery)
EB2	Engine Wire and Differential Wire (Front Differential Upper Side)
EF1	Cowl Wire and Engine Room Main Wire (Right Fender)

▭ : Location of Connector Joining Wire Harness and Wire Harness

▽ : Location of Ground Points

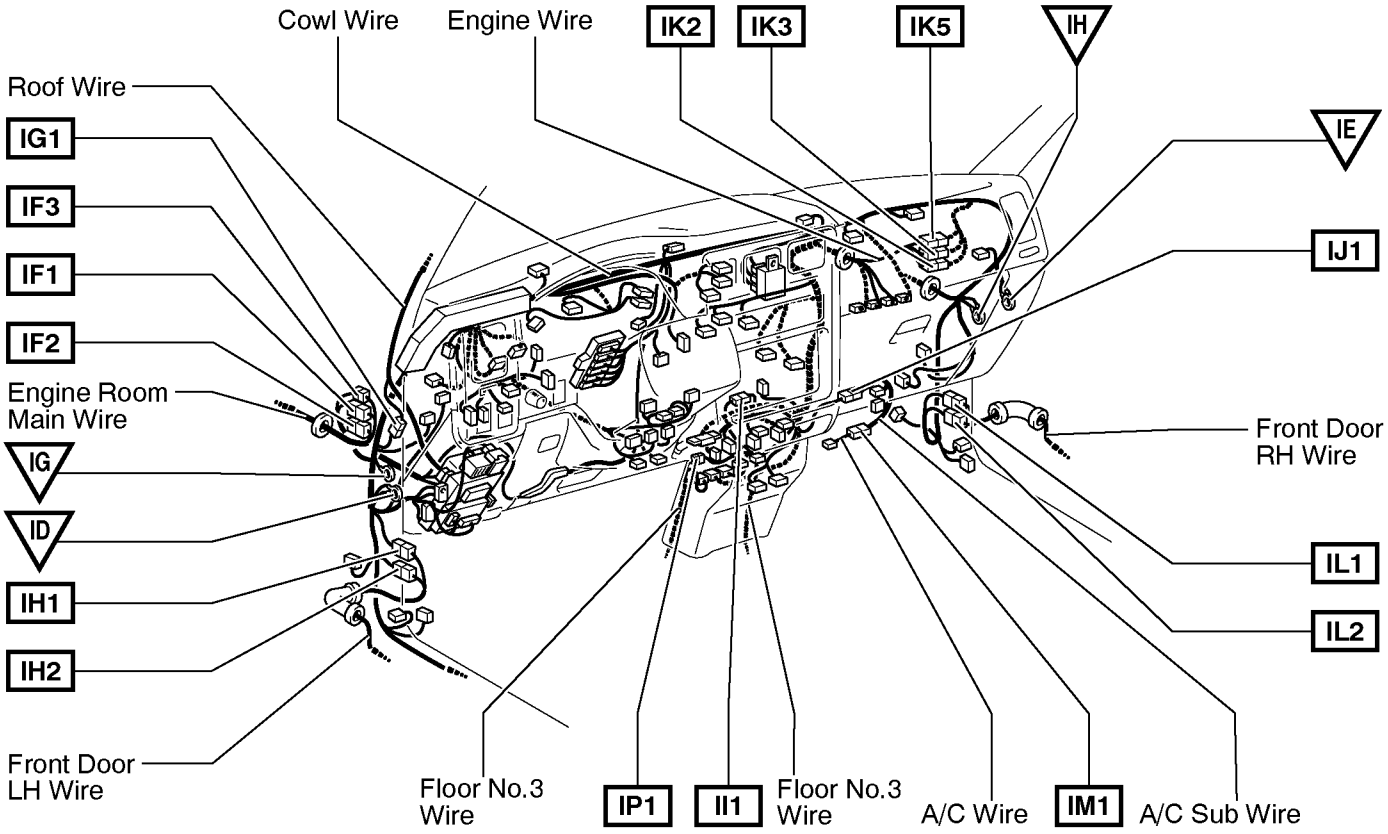

○ : Location of Splice Points

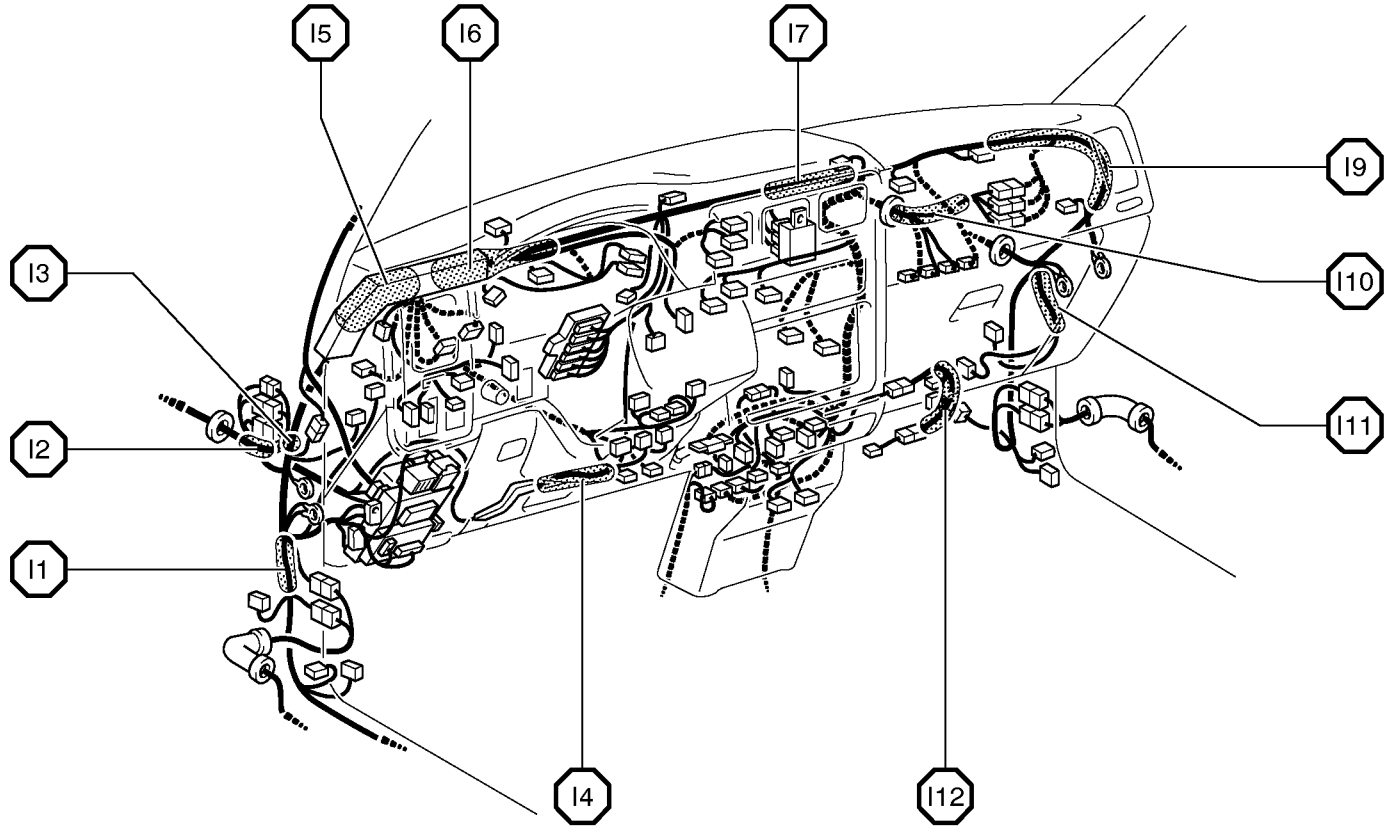

Connector Joining Wire Harness and Wire Harness

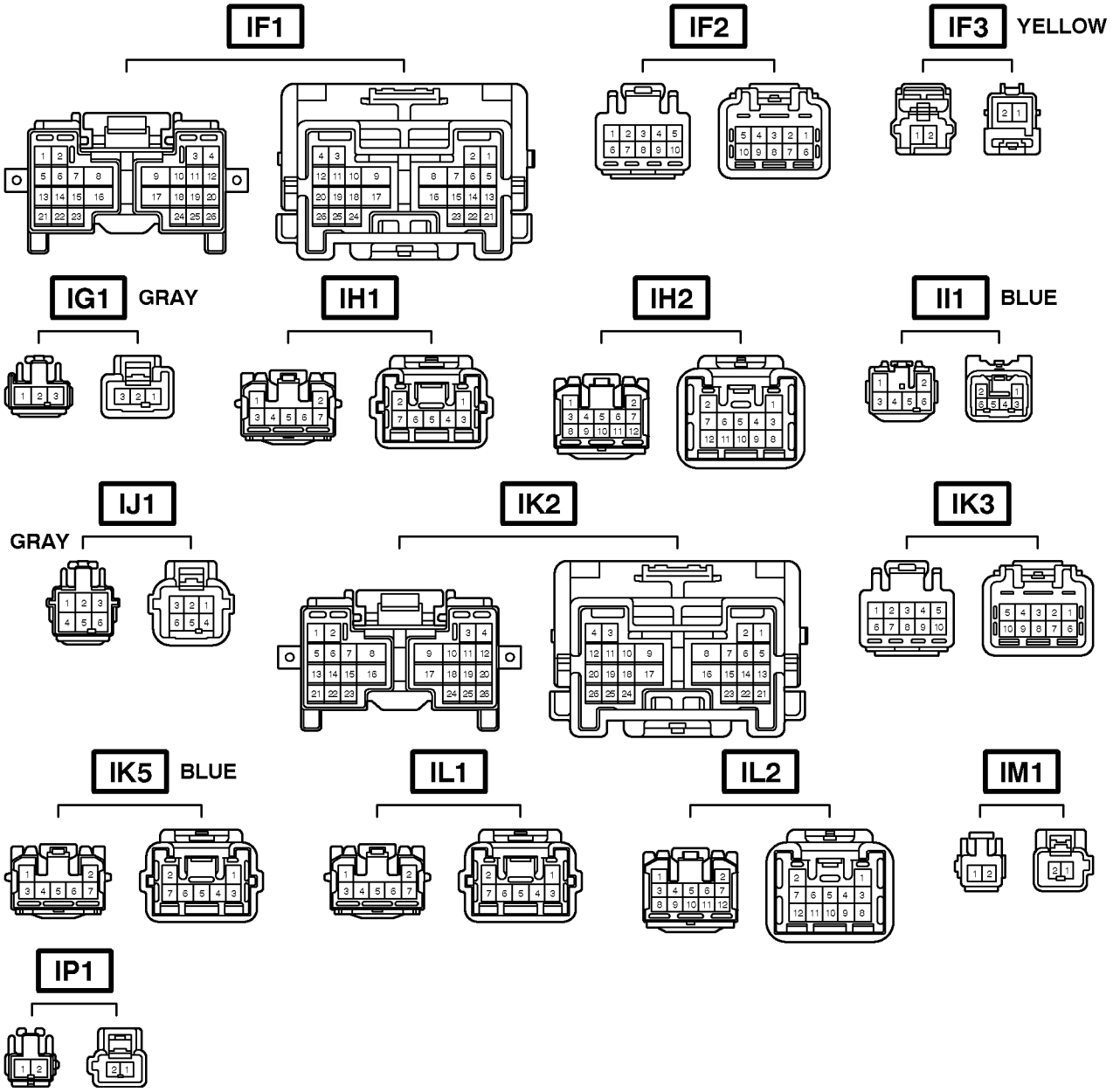

Code	Joining Wire Harness and Wire Harness (Connector Location)
IF1	Engine Room Main Wire and Cowl Wire (Left Kick Panel)
IF2	
IF3	
IG1	Cowl Wire and Roof Wire (Left Kick Panel)
IH1	Front Door LH Wire and Cowl Wire (Left Kick Panel)
IH2	
II1	Cowl Wire and Floor No.3 Wire (Instrument Panel Brace)
IJ1	Cowl Wire and A/C Sub Wire (Behind the Glove Box)
IK2	Engine Wire and Cowl Wire (Right Kick Panel)
IK3	
IK5	
IL1	Front Door RH Wire and Cowl Wire (Right Kick Panel)
IL2	
IM1	A/C Sub Wire and A/C Wire (Behind the Glove Box)
IP1	Floor No.3 Wire and Floor No.3 Wire (Behind the Radio and Player)

▭ : Location of Connector Joining Wire Harness and Wire Harness

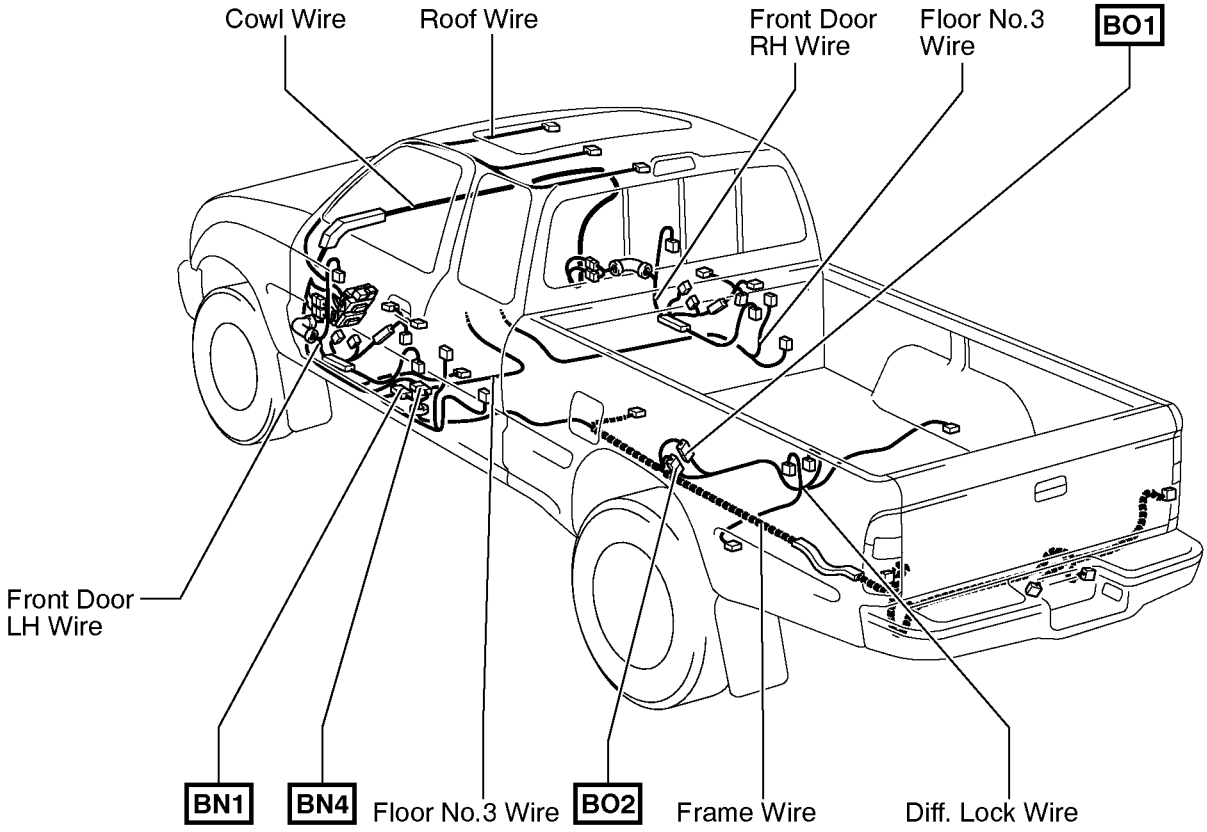

⬡ : Location of Splice Points

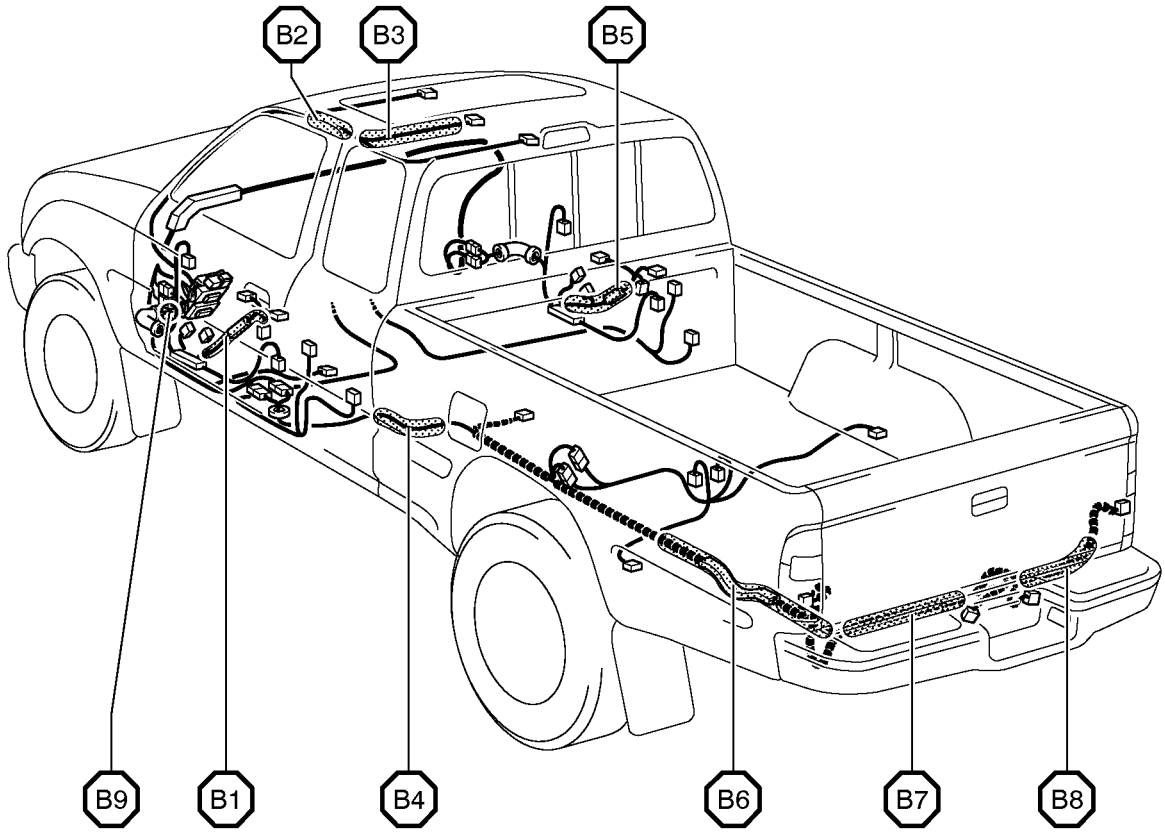

Connector Joining Wire Harness and Wire Harness

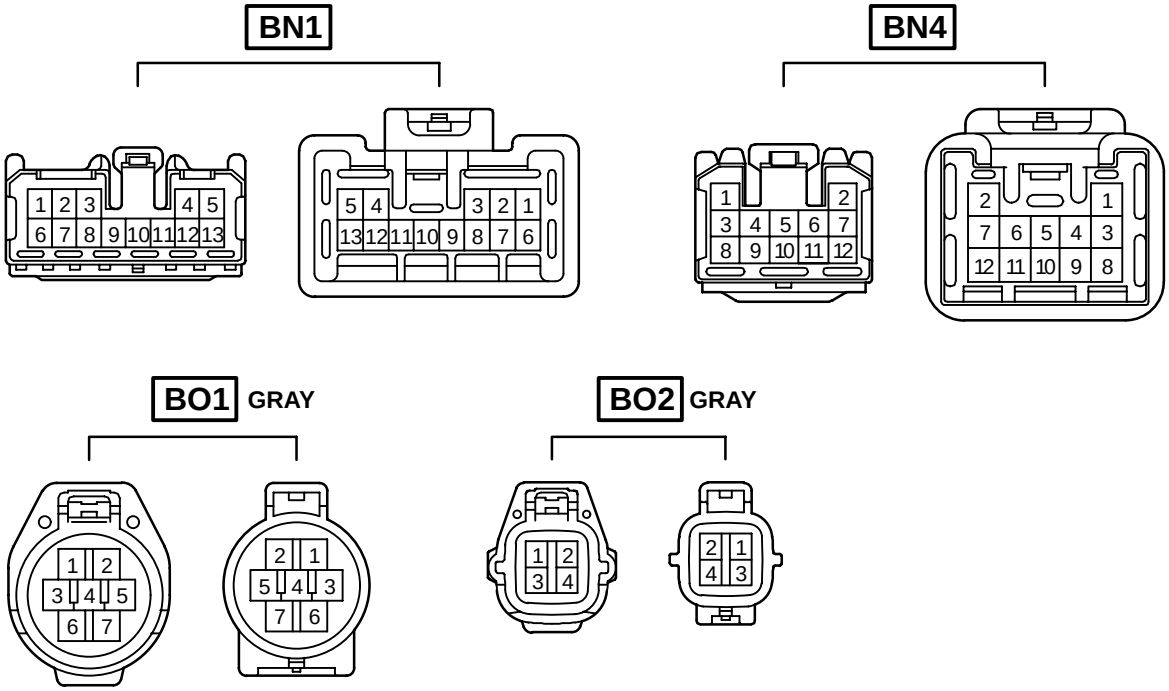

Code	Joining Wire Harness and Wire Harness (Connector Location)
BN1	Frame Wire and Cowl Wire (Under the Driver's Seat)
BN4	
BO1	Frame Wire and Diff. Lock Wire (Rear Side Member LH)
BO2	

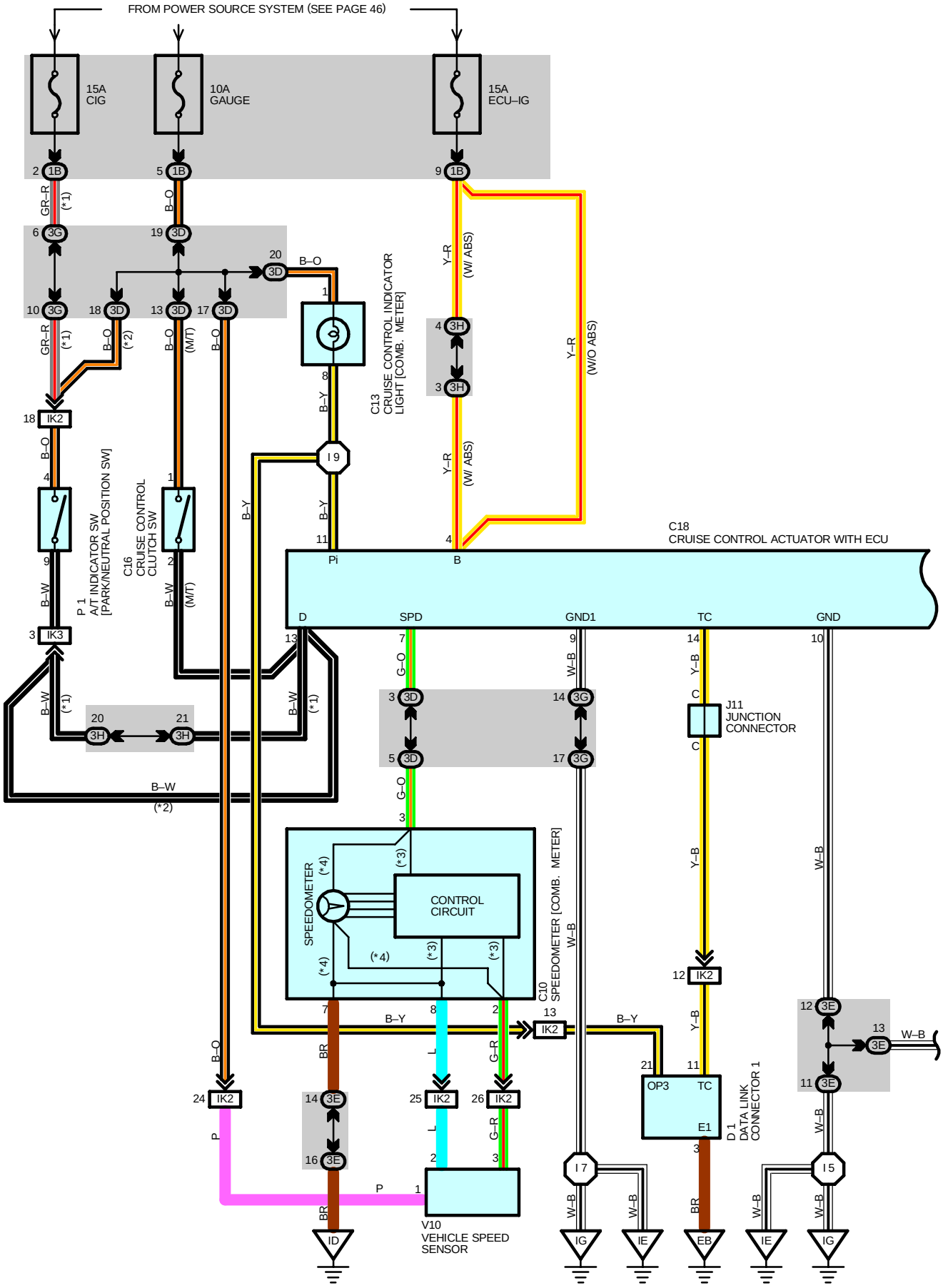
FROM POWER SOURCE SYSTEM (SEE PAGE 46)
15A CIG
10A GAUGE
15A ECU–IG
C13 CRUISE CONTROL INDICATOR LIGHT [COMB. METER]
C16 CRUISE CONTROL CLUTCH SW
P 1 A/T INDICATOR SW [PARK/NEUTRAL POSITION SW]
C18 CRUISE CONTROL ACTUATOR WITH ECU
D
SPD
GND1
TC
GND
Pi
B
J11 JUNCTION CONNECTOR
SPEEDOMETER
CONTROL CIRCUIT
C10 SPEEDOMETER [COMB. METER]
V10 VEHICLE SPEED SENSOR
D 1 DATA LINK CONNECTOR 1
OP3
E1
ID
IG
IE
EB
(W/ ABS)
(W/O ABS)
(M/T)
(*1)
(*2)
(*3)
(*4)

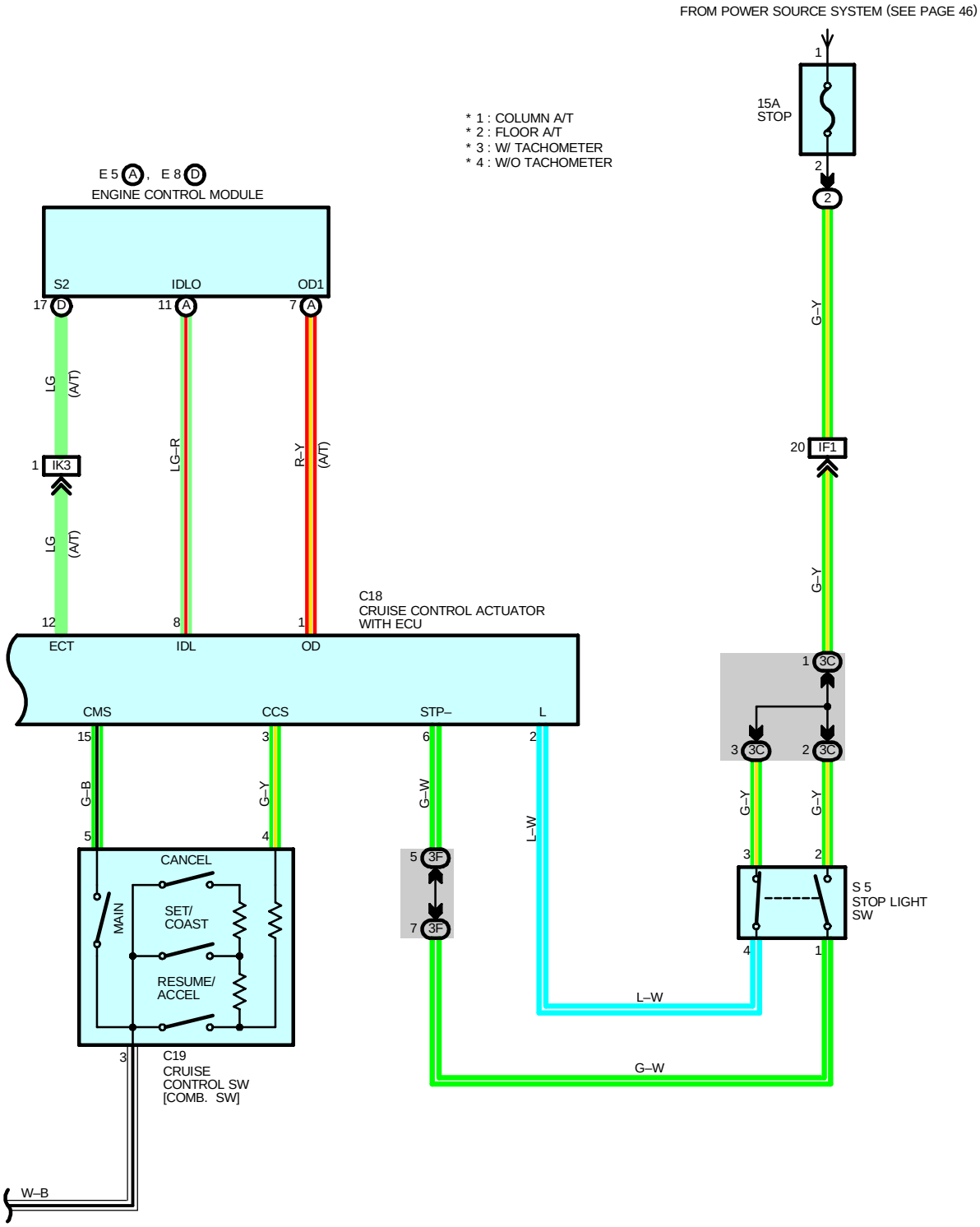
FROM POWER SOURCE SYSTEM (SEE PAGE 46)
* 1 : COLUMN A/T
* 2 : FLOOR A/T
* 3 : W/ TACHOMETER
* 4 : W/O TACHOMETER
15A
STOP
E 5 A , E 8 D
ENGINE CONTROL MODULE
S2
IDLO
OD1
17 D
11 A
7 A
LG (A/T)
LG–R
R–Y (A/T)
1 IK3
LG (A/T)
12
8
1
ECT
IDL
OD
C18
CRUISE CONTROL ACTUATOR WITH ECU
CMS
CCS
STP–
L
15
3
6
2
G–B
G–Y
G–W
L–W
5
4
CANCEL
MAIN
SET/ COAST
RESUME/ ACCEL
3
C19
CRUISE CONTROL SW [COMB. SW]
W–B
5 3F
7 3F
G–W
L–W
1
2
G–Y
20 IF1
G–Y
1 3C
3 3C
2 3C
G–Y
G–Y
3
2
4
1
S 5
STOP LIGHT SW

SYSTEM OUTLINE

The current from the STOP fuse to TERMINAL 3 of the stop light SW to TERMINAL 4 to TERMINAL L of the cruise control actuator with ECU and to TERMINAL 2 of the stop light SW.
Turning the ignition SW on, current flows through the GAUGE fuse to TERMINAL 1 of the cruise control indicator light. The current flowing through the ECU-IG fuse flows to TERMINAL B of the cruise control actuator with ECU.
When turning the ignition SW and cruise control main SW on, a signal will be input from TERMINAL 5 of the cruise control SW to TERMINAL CMS of the cruise control actuator with ECU. With this operation, the cruise control actuator with ECU will operate and the current loaded on TERMINAL B of the cruise control actuator with ECU flows through TERMINAL GND of the cruise control actuator with ECU to GROUND and the cruise control system will become ready to operate. Simultaneously, the current flowing through the GAUGE fuse flows through TERMINAL 1 of the cruise control indicator light to TERMINAL 8 to TERMINAL Pi of the cruise control actuator with ECU to TERMINAL GND to GROUND, and cruise control indicator light comes on and indicate that the cruise control is ready to operate.
Cruise control actuator with ECU will input the signals from the vehicle speed sensor and each switch and process them according to the program memorized advance and output the control signal to the magnet clutch and motor of the actuator in the cruise control actuator with ECU and the engine control module.

1. SET CONTROL

When running vehicle speed is within the set rate (About 40 km/h, 25 mph 200 km/h, 124 mph), turning the cruise control main SW on and pressing the set SW, the signal will be input to the TERMINAL CCS of the cruise control actuator with ECU, and the cruise control actuator with ECU will memorize the vehicle speed as the set vehicle speed at the time of releasing hands from set SW.

2. SET SPEED CONTROL

During cruise control driving, the cruise control actuator with ECU compares this memorized vehicle speed with running vehicle speed input from the speedometer to TERMINAL SPD of the cruise control actuator with ECU, and in order to hold the set vehicle speed, it controls the actuator inside the cruise control actuator with ECU.
Comparing the memorized vehicle speed with running vehicle speed, in case that the running vehicle speed is higher than the memorized vehicle speed, the cruise control actuator with ECU turns the throttle valve to close.
Turning the actuator motor, in the case that the running vehicle speed is lower than the memorized vehicle speed, the cruise control actuator with ECU turns the throttle valve to open and outputs the signal to turn the actuator motor.

3. COAST CONTROL

During cruise control driving, while the coast SW is on, the cruise control actuator returns the throttle cable to close the throttle valve and decrease the driving speed. The vehicle speed when the coast SW is turned off is memorized and the vehicle continues at the new set speed.

4. ACCEL CONTROL

During cruise control driving, while the accel SW is turned on, the cruise control actuator pulls the throttle cable to open the throttle valve and increase the driving speed.
The vehicle speed when the accel SW is turned off is memorized and the vehicle continues at the new set speed.

5. RESUME CONTROL

After canceling with the cancel SW during the normal speed driving, if the vehicle speed is less than the low speed limit (40 km/h, 25 mph), by turning the resume SW on, it causes to return to the set vehicle speed before canceling.

6. MANUAL CANCEL CONTROL

If any of the following operation during cruise control driving, the motor safety magnet clutch of the actuator will turn off and the motor will turn to the direction to close the throttle valve and the cruise control will be canceled.

- Move the shift lever except to D range. (Park/Neutral position SW is off.)(A/T) ”A signal is not input to TERMINAL D of the cruise control actuator with ECU.”
- Pressing the clutch pedal. (Cruise control clutch SW is off.)(M/T) ”A signal is not input to TERMINAL D of the cruise control actuator with ECU.”
- Pressing the brake pedal. (Stop light SW is on.) ”A signal is input to TERMINAL STP- of the cruise control actuator with ECU.”
- Pressing cancel SW. (Cancel SW is on.) ”A signal is input to TERMINAL CCS of the cruise control actuator with ECU.”

7. AUTO CANCEL AND CUTTING OFF THE POWER OF THE ACTUATOR

A) During cruise control driving, in the case that the vehicle has become the following condition, delete the memorized vehicle speed and cancel the cruise control. At the same time, until turning the main SW on next time, the cruise control indicator light is flashing and will inhibit committing the main SW until turning the ignition SW on again.

∗ When the motor inside the cruise control actuator with ECU does not operate.
∗ When the driving circuit of the motor inside the cruise control actuator with ECU is short or open

B) During cruise control driving, in the case that the vehicle has become the following condition, delete the memorized vehicle speed and cancel the control. At the same time, until turning the main SW on next time, the cruise control indicator light is flashing and will inhibit the control until turning the main SW on again.

∗ When the magnet clutch system (Safety magnetic clutch) is short.
∗ When the magnet clutch system (Safety magnetic clutch) has a wire break, (including the wire break of STOP fuse)
∗ When the vehicle speed signal will not be input.
∗ When each signal inside the cruise control SW has grounding short.

C) During cruise control driving, in case that the vehicle comes into the following condition, delete the memorized vehicle speed and cancel the control reset is possible.

∗ When running speed has become less than the lowest limit (approx. 40 km/h, 25 mph) of the possible range of the speed setting.

8. AUTOMATIC TRANSMISSION CONTROL FUNCTION

∗ During cruise control driving and when running speed has become the overdrive cut vehicle speed or less (Memorized vehicle speed 4 km/h, 2.5 mph) on a climbing lane and the likes, overdrive will be canceled promptly. This function works to increase the driving ability of the vehicle and makes the drop of vehicle speed small.
∗ After canceling the overdrive, in case that driving speed has become the overdrive returning speed (Memorized vehicle speed 2 km/h, 1.2 mph) or more and also judges that climbing was over, return it to the overdrive condition after the overdrive return timer has been through.

SERVICE HINTS

C18 CRUISE CONTROL ACTUATOR WITH ECU

7–GROUND : **4** pulse with **1** rotation of the rotor shaft
6–GROUND : Approx. **12** volts with brake pedal depressed
4–GROUND : Approx. **12** volts with ignition SW at **ON** position
10–GROUND : Always continuity
9–GROUND : Always continuity

C19 CRUISE CONTROL SW [COMB. SW]

5–3 : Closed with MAIN SW on
4–3 : Approx. **68** Ω with RESUME/ACCEL SW on
Approx. **198** Ω with SET/COAST SW on
Approx. **418** Ω with CANCEL SW on

○ : PARTS LOCATION

Code	See Page	Code		See Page	Code	See Page
C10	32	C19		32	J11	33
C13	32	D1		28 (5VZ–FE)	P1	29 (5VZ–FE)
C16	32	E5	A	33	S5	33
C18	28 (5VZ–FE)	E8	D	33	V10	29 (5VZ–FE)

⬭ : RELAY BLOCKS

Code	See Page	Relay Blocks (Relay Block Location)
2	21	R/B No.2 (Engine Compartment Left)

 **: JUNCTION BLOCK AND WIRE HARNESS CONNECTOR**

Code	See Page	Junction Block and Wire Harness (Connector Location)
1B	22	Cowl Wire and J/B No.1 (Lower Finish Panel)
3C	24	Cowl Wire and J/B No.3 (Bihind the Instrument Panel Left)
3D		
3E		
3F		
3G	26	Cowl Wire and J/B No.3 (Bihind the Instrument Panel Center)
3H		

 **: CONNECTOR JOINING WIRE HARNESS AND WIRE HARNESS**

Code	See Page	Joining Wire Harness and Wire Harness (Connector Location)
IF1	40	Engine Room Main Wire and Cowl Wire (Left Kick Panel)
IK2	40	Engine Wire and Cowl Wire (Right Kick Panel)
IK3		

 **: GROUND POINTS**

Code	See Page	Ground Points Location
EB	36 (5VZ–FE)	Under the Data Link Connector 1
ID	40	Left Kick Panel
IE	40	Around the Right Edge of the Reinforcement
IG	40	Around the Left Edge of the Reinforcement

 **: SPLICE POINTS**

Code	See Page	Wire Harness with Splice Points	Code	See Page	Wire Harness with Splice Points
I5	40	Cowl Wire	I9	40	Cowl Wire
I7					

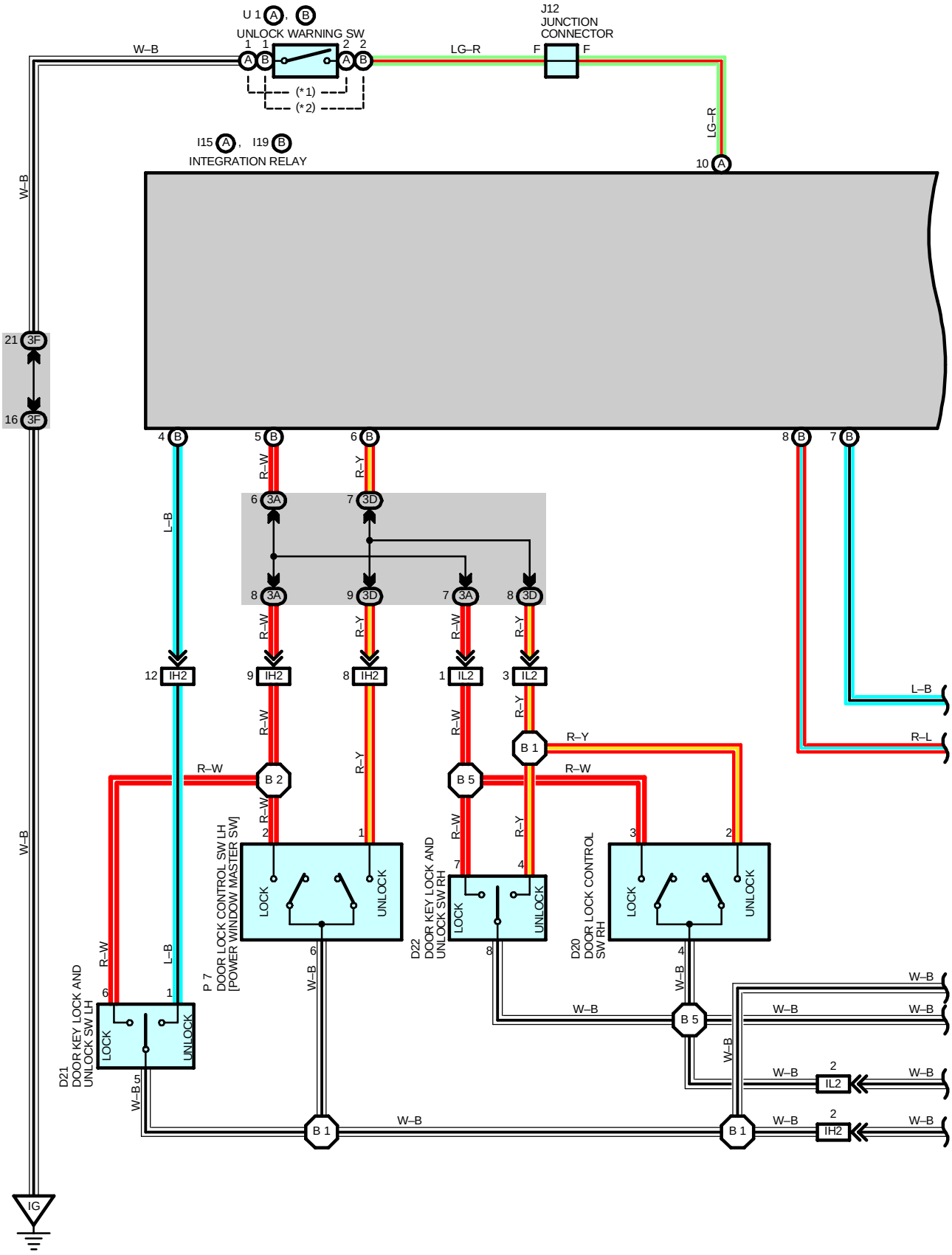
U 1 A, B
UNLOCK WARNING SW
J12
JUNCTION
CONNECTOR
W–B
LG–R
(*1)
(*2)
I15 A, I19 B
INTEGRATION RELAY
21 3F
16 3F
10 A
4 B
5 B
6 B
8 B
7 B
R–W
R–Y
L–B
R–L
6 3A
7 3D
8 3A
9 3D
7 3A
8 3D
12 IH2
9 IH2
8 IH2
1 IL2
3 IL2
B 1
B 2
B 5
P 7
DOOR LOCK CONTROL SW LH
[POWER WINDOW MASTER SW]
LOCK
UNLOCK
D22
DOOR KEY LOCK AND
UNLOCK SW RH
D20
DOOR LOCK CONTROL
SW RH
D21
DOOR KEY LOCK AND
UNLOCK SW LH
W–B *1
IL2
IH2
IG

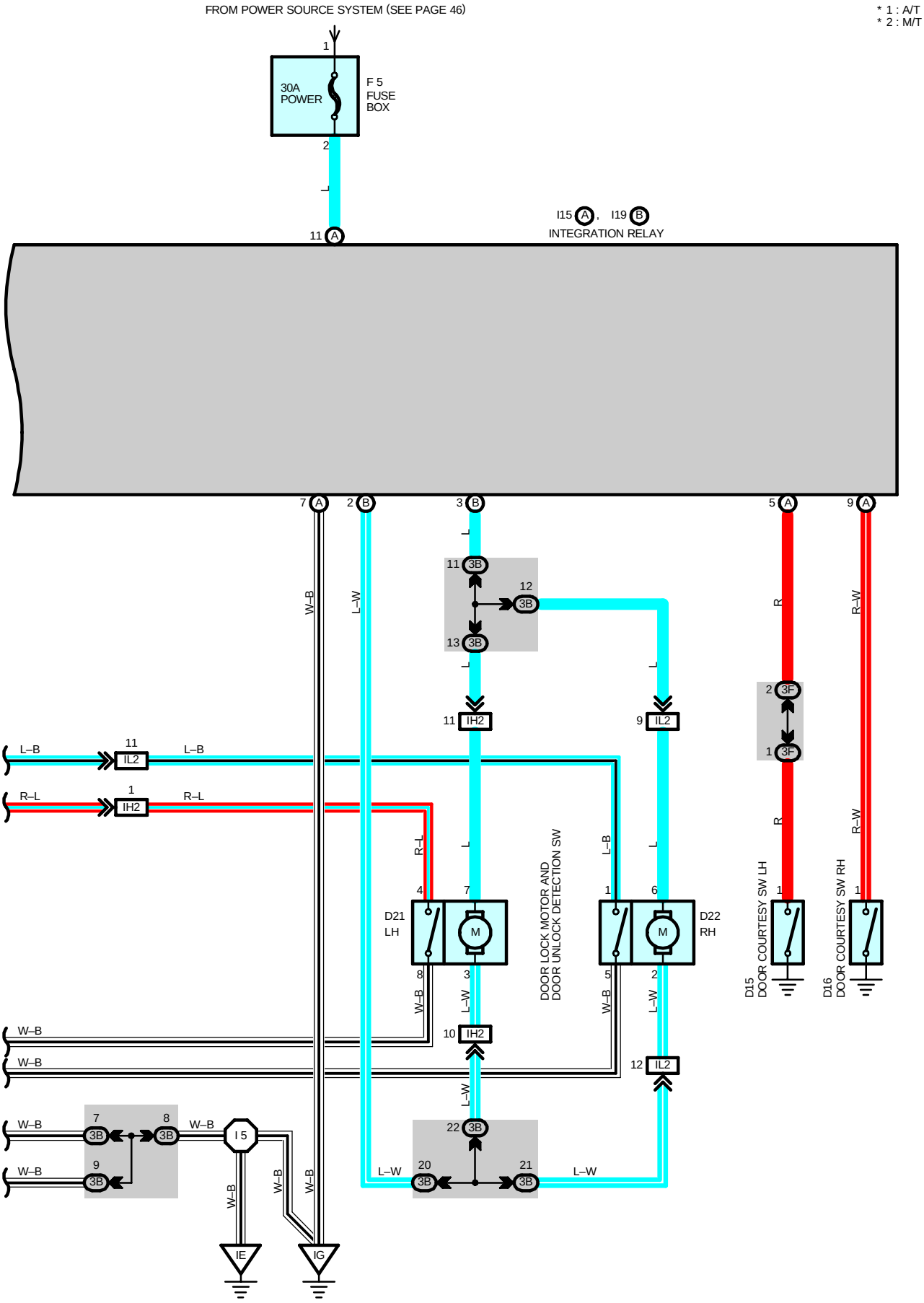
FROM POWER SOURCE SYSTEM (SEE PAGE 46)
* 1 : A/T
* 2 : M/T
30A POWER
F 5 FUSE BOX
I15 A , I19 B
INTEGRATION RELAY
D21 LH
D22 RH
DOOR LOCK MOTOR AND DOOR UNLOCK DETECTION SW
D15 DOOR COURTESY SW LH
D16 DOOR COURTESY SW RH
I 5
IE
IG

DOOR LOCK CONTROL

SYSTEM OUTLINE

Current always flows to TERMINAL (A) 11 of the integration relay through the POWER fuse.

1. MANUAL LOCK OPERATION

To push the door lock control SW or door key lock and unlock SW to LOCK position, a lock signal is input to TERMINAL (B) 5 of the integration relay and causes the relay to function. Current flows from TERMINAL (A) 11 of the relay to TERMINAL (B) 2 to TERMINALS 3 (LH), 2 (RH) of the door lock motors to TERMINALS 7 (LH), 6 (RH) to TERMINAL (B) 3 of the relay to TERMINAL (A) 7 to GROUND and the door lock motor causes the door to lock.

2. MANUAL UNLOCK OPERATION

To push the door lock control SW or door key lock and unlock SW to UNLOCK position, an unlock signal is input to TERMINAL (B) 6 of the integration relay and causes the relay to function. Current flows from TERMINAL (A) 11 of the relay to TERMINAL (B) 3 to TERMINALS 7 (LH), 6 (RH) of the door lock motors to TERMINALS 3 (LH), 2 (RH) to TERMINAL (B) 2 of the relay to TERMINAL (A) 7 to GROUND and the door lock motor causes the door to unlock.

3. IGNITION KEY REMINDER OPERATION

∗ Operating door lock knob (in door lock motor operation)
With ignition key in cylinder (Unlock warning SW on), when any door is opened and locked using door lock knob (Door lock motor), all doors are locked once but each door is unlocked soon by the function of the integration relay. As a result, current flows from TERMINAL (A) 11 of the relay to TERMINAL (B) 3 to TERMINALS 7 (LH), 6 (RH) of the door lock motors to TERMINALS 3 (LH), 2 (RH) to TERMINAL (B) 2 of the relay to TERMINAL (A) 7 to GROUND and causes all the doors to unlock.

∗ Operating door lock control SW or door key lock and unlock SW
With ignition key in cylinder (Unlock warning SW on), when any door is opened and locked using the door lock control SW or door key lock and unlock SW, all doors are locked once but each door is unlocked by the function of the SW contained in motor, which inputs the signal to TERMINAL (B) 8 or (B) 7 of the integration relay. According to this input signal, current flows from TERMINAL (A) 11 of the relay to TERMINAL (B) 3 to TERMINALS 7 (LH), 6 (RH) of the door lock motors to TERMINALS 3 (LH), 2 (RH) to TERMINAL (B) 2 of the relay to TERMINAL (A) 7 to GROUND and causes all the doors to unlock.

SERVICE HINTS

I15 (A), I19 (B) INTEGRATION RELAY

(A) 7–GROUND : Always continuity.
(A) 5–GROUND : Continuity with LH door open.
(A)11–GROUND : Always approx. **12** volts
(B) 3–GROUND : Approx. **12** volts for **0.2** seconds with following operations.
∗ Door lock control SW unlocked.
∗ Door lock control SW locked with ignition key in cylinder and LH door open. (Ignition key reminder function)
∗ Door lock knob locked with ignition key in cylinder and LH door open. (Ignition key reminder function)
∗ Unlocking the LH, RH door cylinder with key.
(B) 2–GROUND : Approx. **12** volts for **0.2** seconds with following operations.
∗ Door lock control SW locked.
∗ Locking the LH, RH door cylinder with key.
(B) 5–GROUND : **0** volts with door lock control SW locked or LH, RH door lock cylinder locked with key.
(A) 9–GROUND : Continuous with RH door open.
(B) 8–GROUND : Continuous with LH door lock knob unlocked.
(B) 7–GROUND : Continuous with RH door lock knob unlocked.
(A)10–GROUND : Approx. **12** volts with ignition key in cylinder.
(B) 6–GROUND : **0** volts with door lock control SW unlocked.

D15, D16 DOOR COURTESY SW LH, RH

1–GROUND : Closed with door open.

D21, D22 DOOR LOCK MOTOR, DOOR UNLOCK DETECTION SW AND DOOR KEY LOCK AND UNLOCK SW LH, RH

4–8 (LH), 1–5 (RH) : Closed with **UNLOCK** position.

U1 (A), (B) UNLOCK WARNING SW

(A) 1–(A) 2, (B) 1–(B) 2 : Closed with key in cylinder.

: PARTS LOCATION

Code	See Page	Code		See Page	Code		See Page
D15	32	D22		34	J12		33
D16	32	F5		33	P7		34
D20	34	I15	A	33	U1	A	33
D21	34	I19	B	33		B	33

: JUNCTION BLOCK AND WIRE HARNESS CONNECTOR

Code	See Page	Junction Block and Wire Harness (Connector Location)
3A	24	Cowl Wire and J/B No.3 (Bihind the Instrument Panel Left)
3B		
3D		
3F		

: CONNECTOR JOINING WIRE HARNESS AND WIRE HARNESS

Code	See Page	Joining Wire Harness and Wire Harness (Connector Location)
IH2	40	Front Door LH Wire and Cowl Wire (Left Kick Panel)
IL2	40	Front Door RH Wire and Cowl Wire (Right Kick Panel)

: GROUND POINTS

Code	See Page	Ground Points Location
IE	40	Around the Right Edge of the Reinforcement
IG	40	Around the Left Edge of the Reinforcement

: SPLICE POINTS

Code	See Page	Wire Harness with Splice Points	Code	See Page	Wire Harness with Splice Points
I5	40	Cowl Wire	B2	42	Roof Wire
B1	42	Front Door LH Wire	B5	42	Front Door RH Wire

ELECTRONICALLY CONTROLLED TRANSMISSION AND A/T INDICATOR

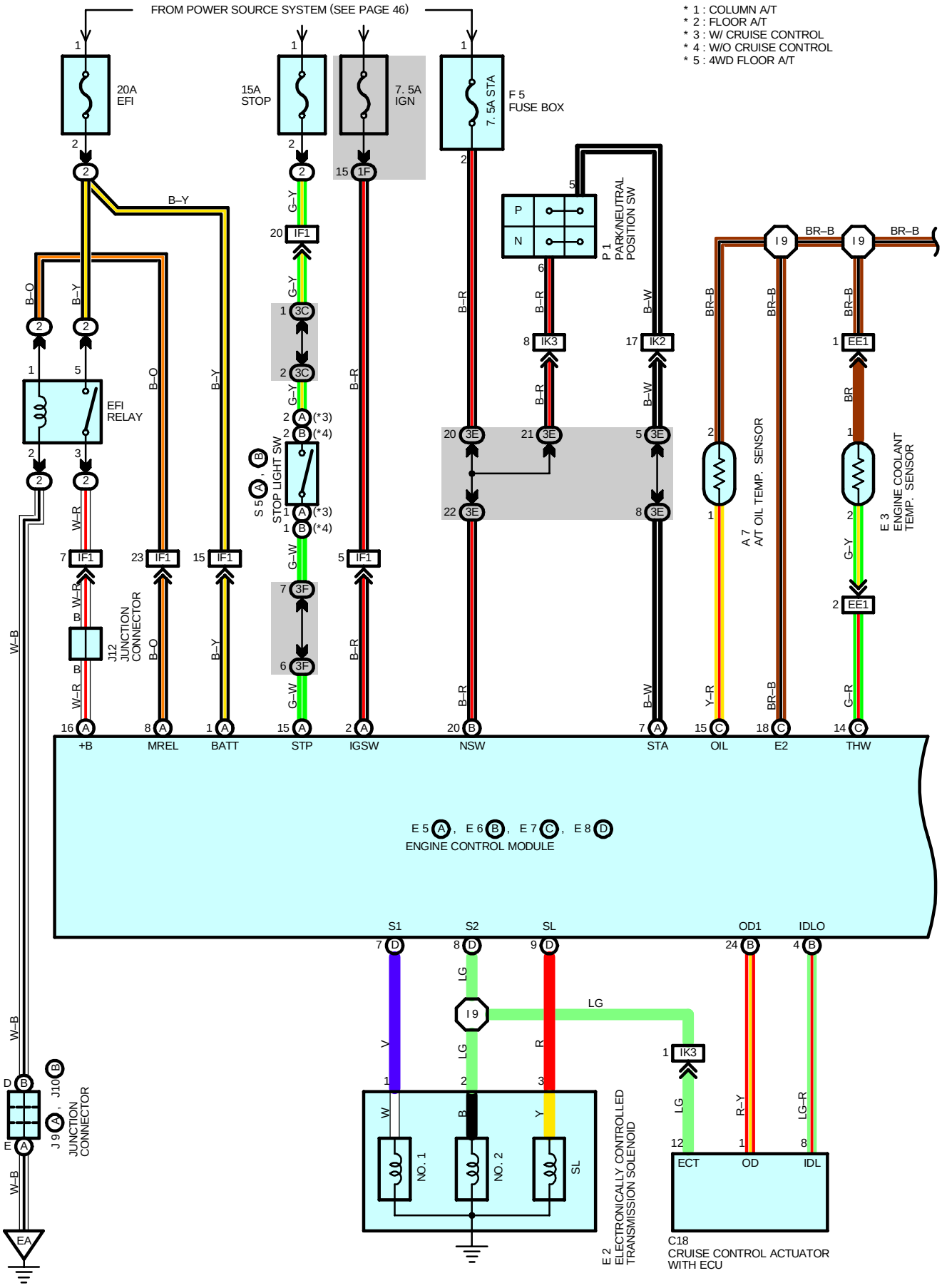

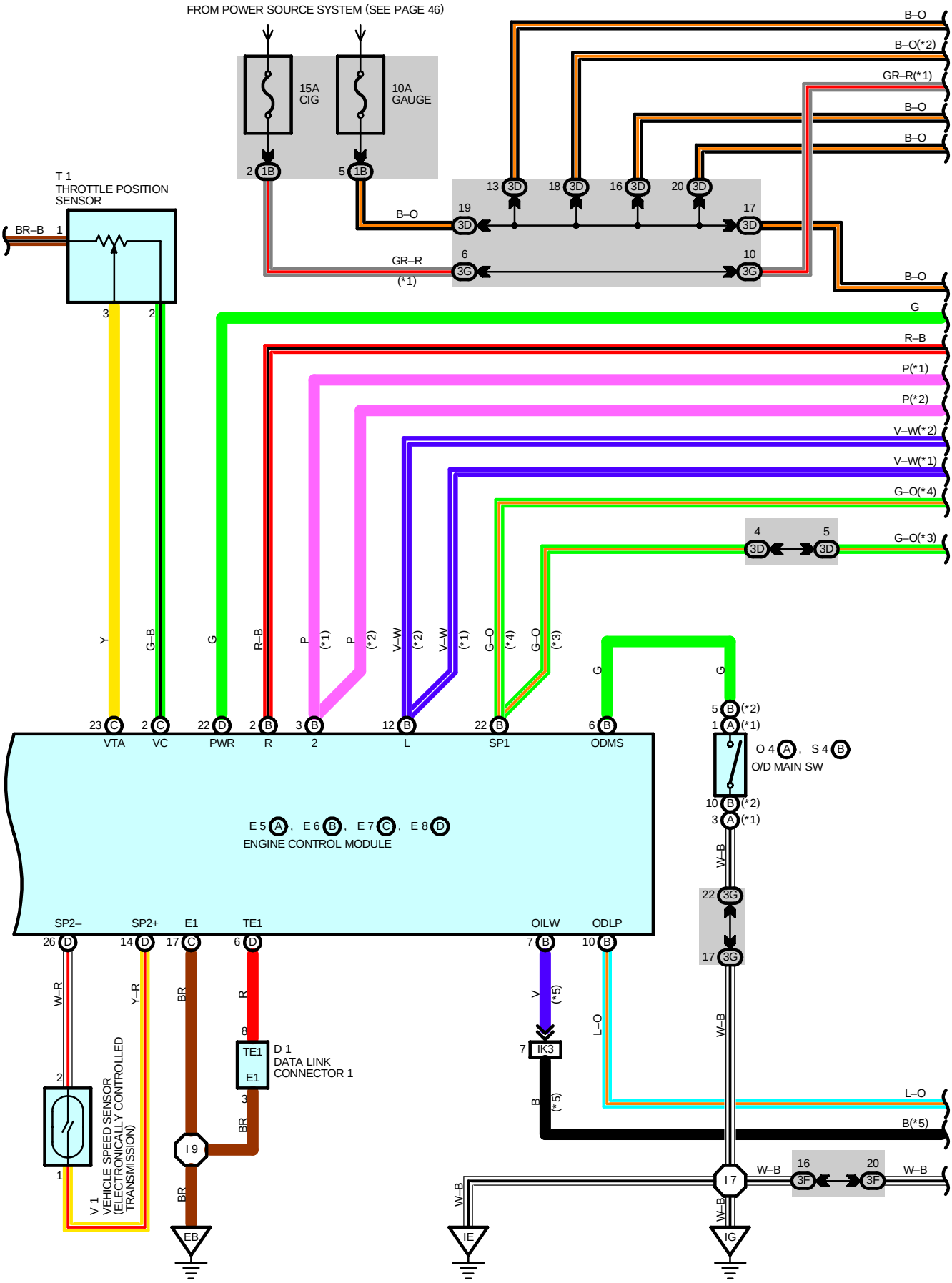
FROM POWER SOURCE SYSTEM (SEE PAGE 46)
15A CIG
10A GAUGE
T 1
THROTTLE POSITION SENSOR
BR–B
B–O
B–O(*2)
GR–R(*1)
GR–R (*1)
G
R–B
P(*1)
P(*2)
V–W(*2)
V–W(*1)
G–O(*4)
G–O(*3)
Y
G–B
R–B
V–W
G–O
VTA
VC
PWR
R
2
L
SP1
ODMS
O 4 A , S 4 B
O/D MAIN SW
E 5 A , E 6 B , E 7 C , E 8 D
ENGINE CONTROL MODULE
SP2–
SP2+
E1
TE1
OILW
ODLP
W–R
Y–R
BR
R
V
L–O
B(*5)
W–B
V 1
VEHICLE SPEED SENSOR (ELECTRONICALLY CONTROLLED TRANSMISSION)
D 1
DATA LINK CONNECTOR 1
IK3
I 9
I 7
EB
IE
IG

ELECTRONICALLY CONTROLLED TRANSMISSION AND A/T INDICATOR

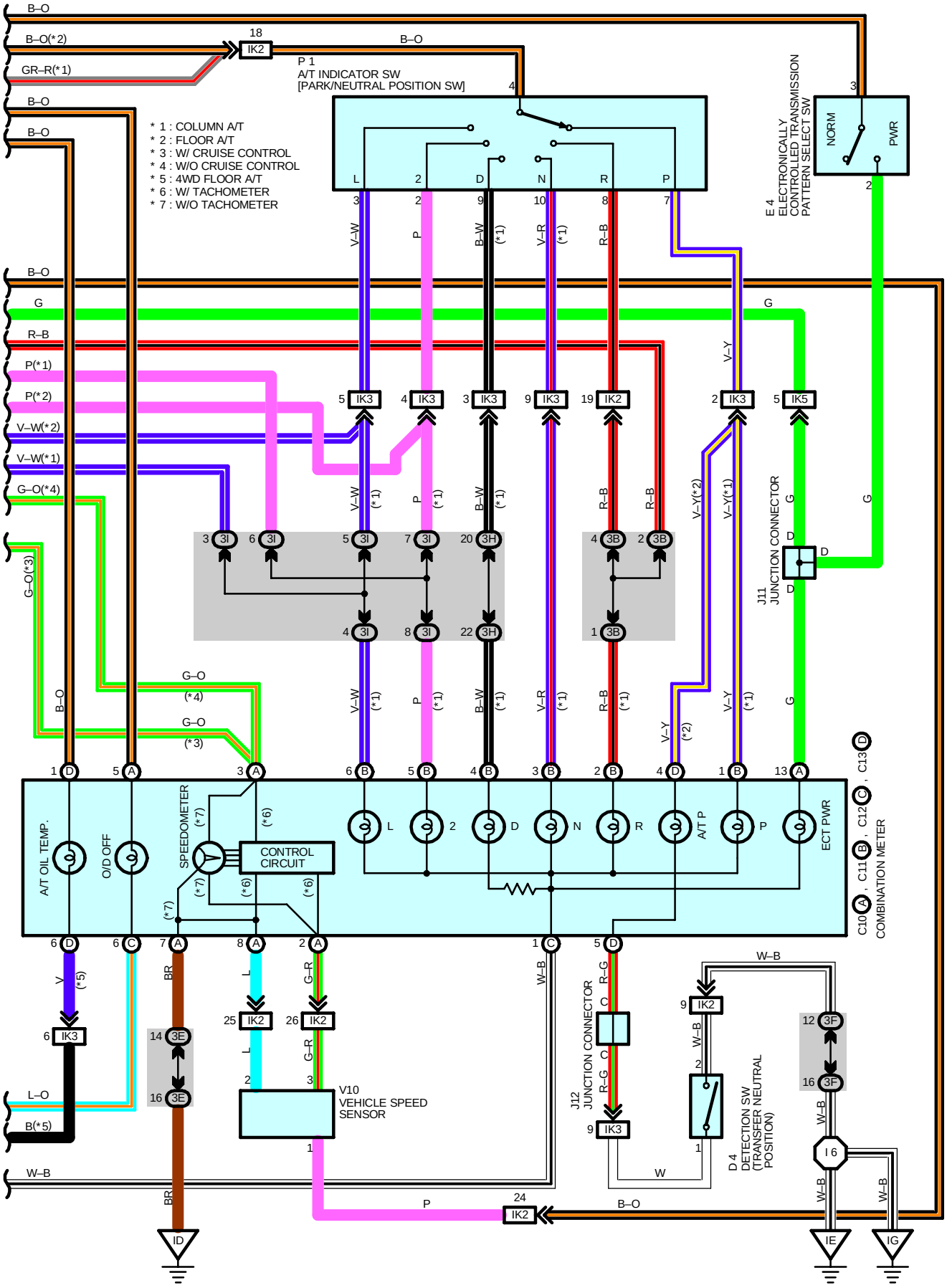

SYSTEM OUTLINE

Previous automatic transmissions have selected each gear shift using mechanically controlled throttle hydraulic pressure, governor hydraulic pressure and lock-up hydraulic pressure. The electronically controlled transmission, however, electrically controls the governor pressure and lock-up sensor through the solenoid valve. Control of the solenoid valve by the engine control module based on the input signals from each sensor makes smooth driving possible by shift selection for each gear which is most appropriate to the driving conditions at that time.

1. GEAR SHIFT OPERATION

During driving, the engine control module selects the shift for each gear which is most appropriate to the driving conditions, based on input signals from the engine coolant temp. sensor to TERMINAL THW of the engine control module and also the input signals to TERMINAL SP2+ of the engine control module from the vehicle speed sensor devoted to the electronically controlled transmission. Current is then output to the electronically controlled transmission solenoid. When shifting to 1st speed, current flows from TERMINAL S1 of the engine control module to TERMINAL 1 of the electronically controlled transmission solenoid to GROUND, and continuity to the No.1 solenoid causes the shift.

For 2nd speed, current flows from TERMINAL S1 of the engine control module to TERMINAL 1 of the electronically controlled transmission solenoid to GROUND, and from TERMINAL S2 of the engine control module to TERMINAL 2 of the electronically controlled transmission solenoid to GROUND. And continuity to solenoid No.1 and No.2 causes the shift.

For 3rd speed, there is no continuity to No.1 solenoid, only to No.2 causing the shift. Shifting into 4th speed (Overdrive) takes place when there is no continuity to either No.1 or No.2 solenoid.

2. LOCK-UP OPERATION

When the engine control module judges from each signal that lock-up operation conditions have been met, current flows from TERMINAL SL of the engine control module to TERMINAL 3 of the electronically controlled transmission solenoid to GROUND, causing continuity to the lock-up solenoid and causing lock-up operation.

3. STOP LIGHT SW CIRCUIT

If the brake pedal is depressed (Stop light SW on) when driving in lock-up condition, a signal is input to TERMINAL STP of the engine control module, the engine control module operates and continuity to the lock-up solenoid is cut.

4. OVERDRIVE CIRCUIT

* O/D main SW on
  When the O/D main SW is turned on (SW point is open), a signal is input to TERMINAL ODMS of the engine control module and engine control module operation causes gear shift when the conditions for overdrive are met.
* O/D main SW off
  When the O/D main SW is turned off (SW point is closed), a signal is input into TERMINAL ODMS of the engine control module, and turns on the O/D off indicator light. This activates the ECU, and the transmission system is controlled not to shift to overdrive.

5. A/T OIL TEMP. WARNING

When the A/T oil temp. sensor affixed to the transmission case detects that the fluid temp. is 150˚C (302˚F) or more, the engine control module operates and the current flowing through the GAUGE fuse flows to the A/T oil temp. warning light to TERMINAL OILW of the engine control module to GROUND, so that the warning light lights up, informing that the oil temp. is high. When the oil temp. drops to 120˚C (248˚F) or less, the engine control module stops operating and the warning light goes out.

ELECTRONICALLY CONTROLLED TRANSMISSION AND A/T INDICATOR

SERVICE HINTS

E2 ELECTRONICALLY CONTROLLED TRANSMISSION SOLENOID

1, 2, 3-GROUND : Approx. **13** Ω

P1 PARK/NEUTRAL POSITION SW

4-GROUND : Approx. **12** volts with ignition SW ON (Floor A/T), ACC (Column A/T) position

O4 (A), S4 (B) O/D MAIN SW

(A) 1-(A)3, (B) 5-(B) 10 : Open with O/D main SW at **ON** position
Closed with O/D main SW at **OFF** position

S5 (A), (B) STOP LIGHT SW

(A) 1-(A) 2, (B) 1-(B) 2 : Closed with brake pedal depressed

E5 (A), E6 (B), E7 (C), E8 (D) ENGINE CONTROL MODULE

S1-E1 : **9**-**14** volts
S2,SL-E1 : **0**-**1.5** volts
STP–E1 : **7.5**–**14** volts with brake pedal depressed
: **0**–**1.5** volts with brake pedal released
THW–E2 : **0.2**–**1.0** volts with coolant temp. **80**˚C (**176**˚F)
OIL–E2 : **4**–**5** volts with fluid temp. **20**˚C (**68**˚F)
VTA–E2 : **0.3**–**0.8** volts with throttle valve fully closed
: **3.2**–**4.9** volts with throttle valve fully open
VC–E2 : **4.5**–**5.5** volts
OD1–E1 : **4.5**–**5.5** volts
ODMS–E1 : **9**–**14** volts O/D main SW turned on
: **0** volts O/D main SW turned off
SP1–E1 : Pulse generation with vehicle moving
2–E1 : **10**–**14** volts with shift lever at **2** position
: **0**–**2** volts with shift lever at except **2** position
L–E1 : **10**–**14** volts with shift lever at **L** position
: **0**–**2** volts with shift lever at except **L** position
OILW–E1 : **0.1**–**4.9** volts
+B–E1 : **9**–**14** volts
BATT–E1 : **9**–**14** volts

: PARTS LOCATION

Code	See Page	Code	See Page	Code	See Page
A7	28 (5VZ–FE)	E4	33	O4 A	33
C10 A	32	E5 A	33	P1	29 (5VZ–FE)
C11 B	32	E6 B	33	S4 B	33
C12 C	32	E7 C	33	S5 A	33
C13 D	32	E8 D	33	S5 B	33
C18	28 (5VZ–FE)	F5	33	T1	29 (5VZ–FE)
D1	28 (5VZ–FE)	J9 A	29 (5VZ–FE)	V1	29 (5VZ–FE)
D4	28 (5VZ–FE)	J10 B	29 (5VZ–FE)	V10	29 (5VZ–FE)
E2	28 (5VZ–FE)	J11	33		
E3	28 (5VZ–FE)	J12	33		

: RELAY BLOCKS

Code	See Page	Relay Blocks (Relay Block Location)
2	21	R/B No.2 (Engine Compartment Left)

(CALIFORNIA 5VZ–FE)

: JUNCTION BLOCK AND WIRE HARNESS CONNECTOR

Code	See Page	Junction Block and Wire Harness (Connector Location)
1B	22	Cowl Wire and J/B No.1 (Lower Finish Panel)
1F	22	Engine Room Main Wire and J/B No.1 (Lower Finish Panel)
3B	24	Cowl Wire and J/B No.3 (Bihind the Instrument Panel Left)
3C		
3D		
3E		
3F		
3G	26	Cowl Wire and J/B No.3 (Bihind the Instrument Panel Center)
3H		
3I		

: CONNECTOR JOINING WIRE HARNESS AND WIRE HARNESS

Code	See Page	Joining Wire Harness and Wire Harness (Connector Location)
EE1	36 (5VZ–FE)	Engine Wire and Sensor Wire (Over the Cylinder Head)
IF1	40	Engine Room Main Wire and Cowl Wire (Left Kick Panel)
IK2	40	Engine Wire and Cowl Wire (Right Kick Panel)
IK3		
IK5		

: GROUND POINTS

Code	See Page	Ground Points Location
EA	36 (5VZ–FE)	Front Left Fender
EB	36 (5VZ–FE)	Under the Data Link Connector 1
ID	40	Left Kick Panel
IE	40	Around the Right Edge of the Reinforcement
IG	40	Around the Left Edge of the Reinforcement

: SPLICE POINTS

Code	See Page	Wire Harness with Splice Points	Code	See Page	Wire Harness with Splice Points
I6	40	Cowl Wire	I9	40	Cowl Wire
I7					

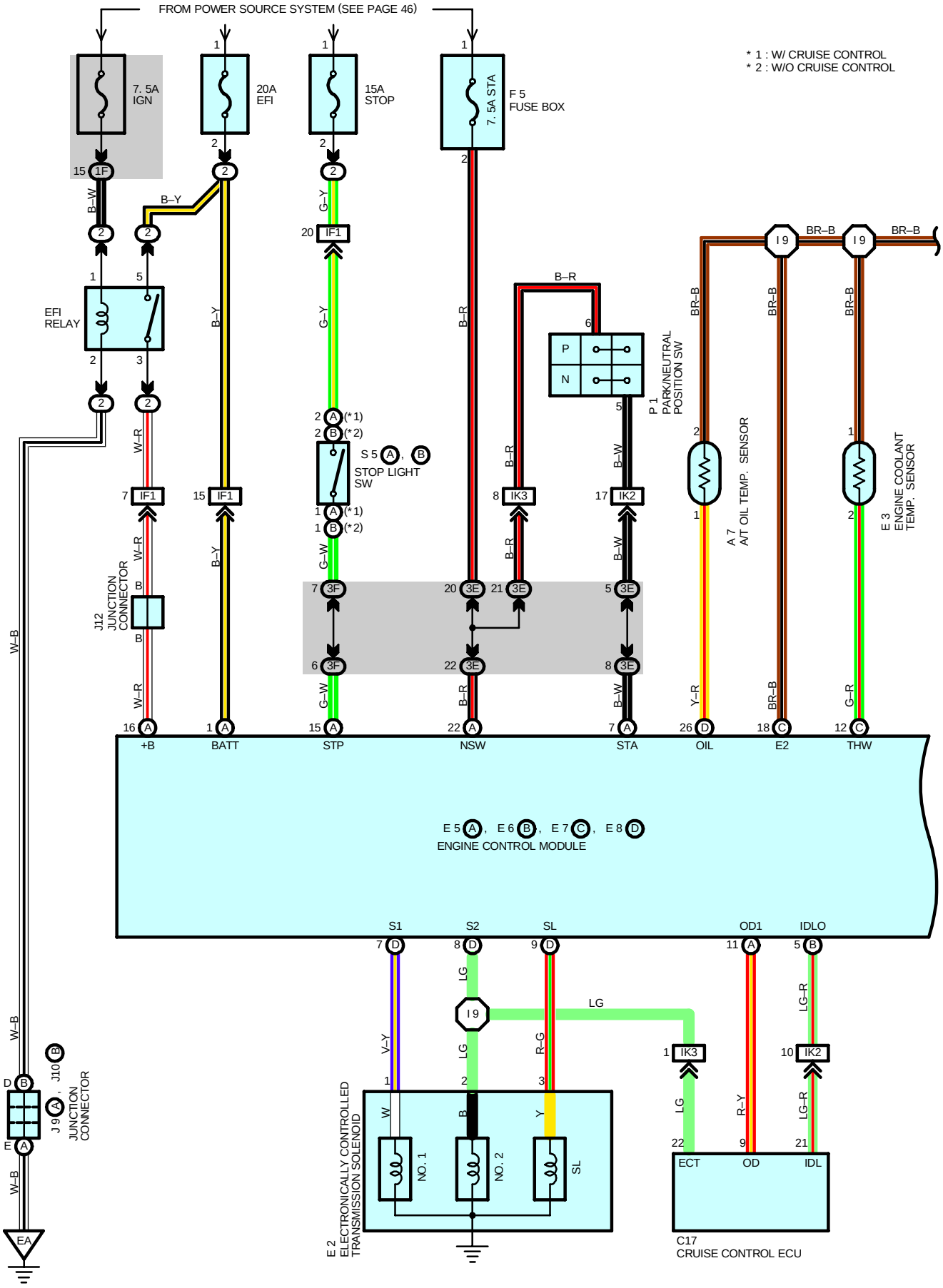
FROM POWER SOURCE SYSTEM (SEE PAGE 46)
* 1 : W/ CRUISE CONTROL
* 2 : W/O CRUISE CONTROL
7. 5A IGN
20A EFI
15A STOP
7. 5A STA
F 5 FUSE BOX
EFI RELAY
J12 JUNCTION CONNECTOR
S 5 A, B STOP LIGHT SW
P 1 PARK/NEUTRAL POSITION SW
A 7 A/T OIL TEMP. SENSOR
E 3 ENGINE COOLANT TEMP. SENSOR
+B
BATT
STP
NSW
STA
OIL
E2
THW
E 5 A, E 6 B, E 7 C, E 8 D
ENGINE CONTROL MODULE
S1
S2
SL
OD1
IDLO
E 2 ELECTRONICALLY CONTROLLED TRANSMISSION SOLENOID
NO. 1
NO. 2
SL
J 9 A, J10 B JUNCTION CONNECTOR
EA
C17 CRUISE CONTROL ECU
ECT
OD
IDL

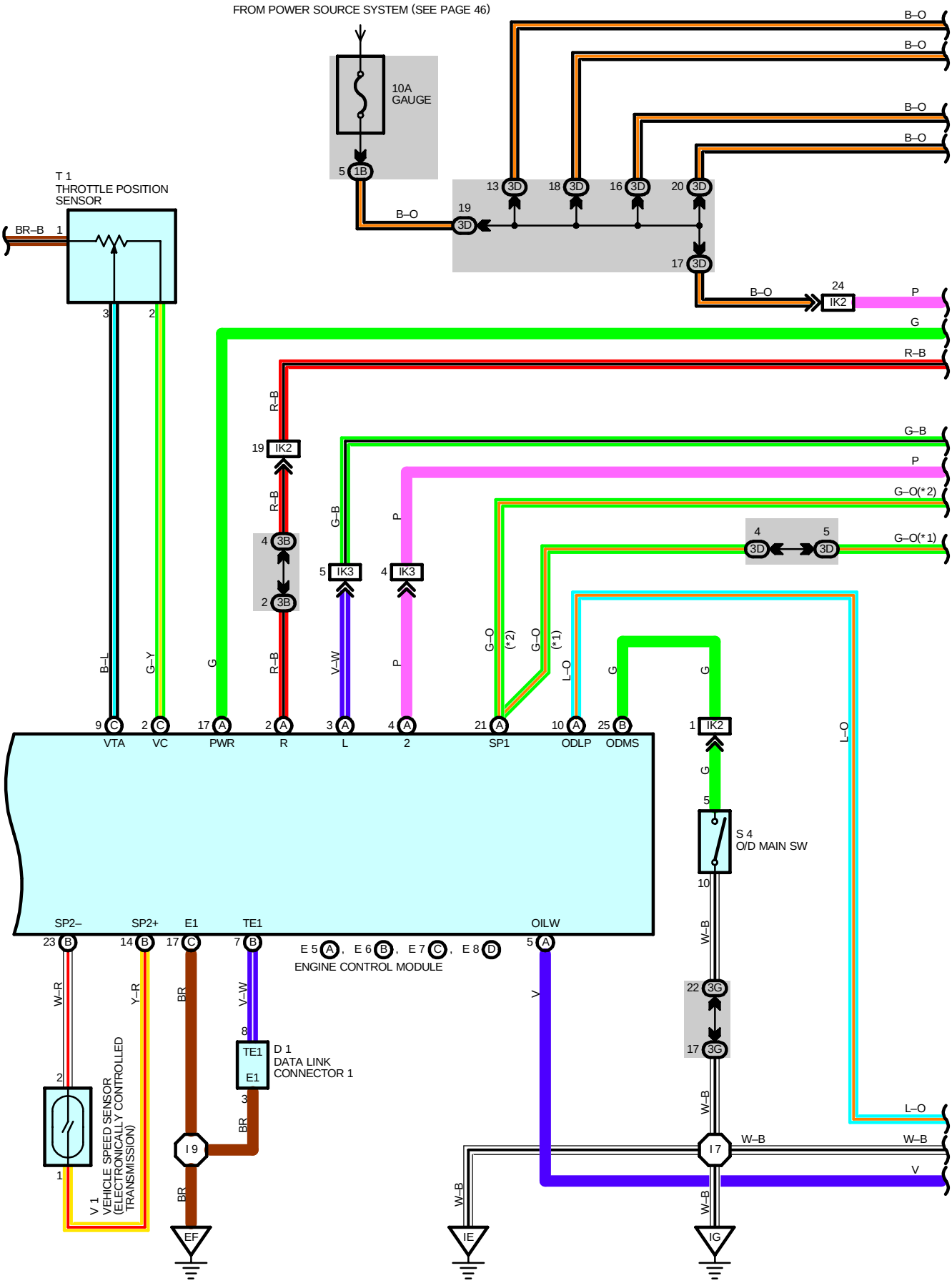
FROM POWER SOURCE SYSTEM (SEE PAGE 46)
10A
GAUGE
T 1
THROTTLE POSITION
SENSOR
BR–B
B–O
B–O
B–O
B–O
B–O
P
G
R–B
G–B
P
G–O(*2)
G–O(*1)
B–L
G–Y
G
R–B
V–W
P
G–O (*2)
G–O (*1)
L–O
G
G
L–O
VTA
VC
PWR
R
L
2
SP1
ODLP
ODMS
S 4
O/D MAIN SW
SP2–
SP2+
E1
TE1
OILW
E 5 A , E 6 B , E 7 C , E 8 D
ENGINE CONTROL MODULE
W–R
Y–R
BR
V–W
BR
V
W–B
W–B
L–O
W–B
W–B
V
W–B
V 1
VEHICLE SPEED SENSOR
(ELECTRONICALLY CONTROLLED
TRANSMISSION)
D 1
DATA LINK
CONNECTOR 1
TE1
E1
EF
IE
IG

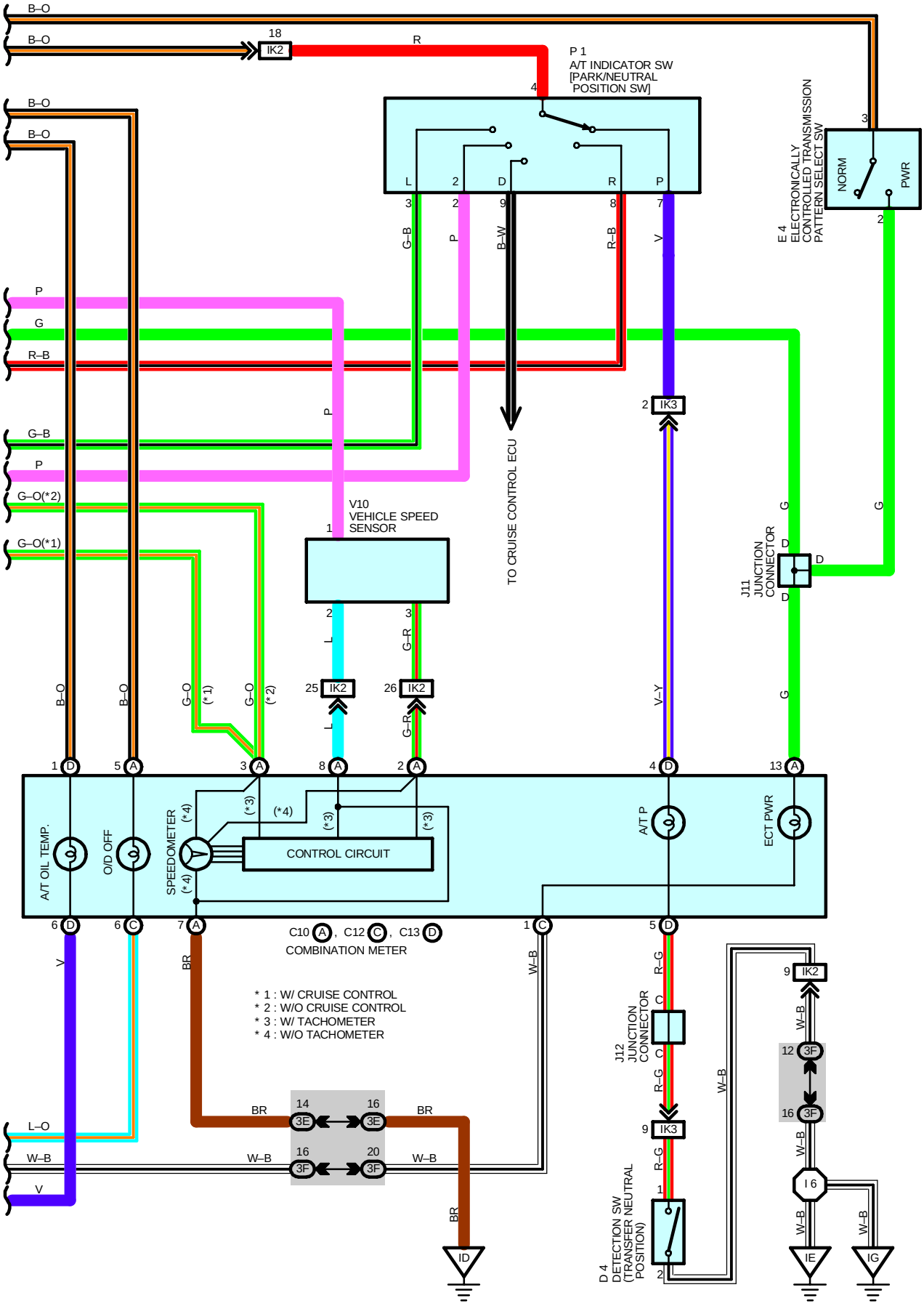
B–O
B–O
18
IK2
R
P 1
A/T INDICATOR SW
[PARK/NEUTRAL
POSITION SW]
4
L
2
D
R
P
3
2
9
8
7
G–B
P
B–W
R–B
V
E 4
ELECTRONICALLY
CONTROLLED TRANSMISSION
PATTERN SELECT SW
NORM
PWR
3
2
P
G
R–B
G–B
P
G–O(*2)
G–O(*1)
V10
VEHICLE SPEED
SENSOR
1
TO CRUISE CONTROL ECU
2 IK3
J11
JUNCTION
CONNECTOR
D
D
D
G
G
2
3
L
G–R
25 IK2
26 IK2
V–Y
G
B–O
B–O
G–O
(*1)
G–O
(*2)
1 D
5 A
3 A
8 A
2 A
4 D
13 A
A/T OIL TEMP.
O/D OFF
SPEEDOMETER
(*4)
(*4)
(*3)
(*4)
(*3)
(*3)
CONTROL CIRCUIT
A/T P
ECT PWR
6 D
6 C
7 A
C10 A , C12 C , C13 D
COMBINATION METER
1 C
5 D
V
BR
W–B
R–G
* 1 : W/ CRUISE CONTROL
* 2 : W/O CRUISE CONTROL
* 3 : W/ TACHOMETER
* 4 : W/O TACHOMETER
J12
JUNCTION
CONNECTOR
9 IK2
W–B
12 3F
16 3F
W–B
I 6
W–B
W–B
IE
IG
L–O
W–B
V
BR
14 3E
16 3E
BR
W–B
16 3F
20 3F
W–B
BR
ID
9 IK3
R–G
1
2
D 4
DETECTION SW
(TRANSFER NEUTRAL
POSITION)

SYSTEM OUTLINE

Previous automatic transmissions have selected each gear shift using mechanically controlled throttle hydraulic pressure, governor hydraulic pressure and lock-up hydraulic pressure. The electronically controlled transmission, however, electrically controls the governor pressure and lock-up pressure through the solenoid valve. Control of the solenoid valve by the engine control module based on the input signals from each sensor makes smooth driving possible by shift selection for each gear which is most appropriate to the driving conditions at that time.

1. GEAR SHIFT OPERATION

During driving, the engine control module selects the shift for each gear which is most appropriate to the driving conditions, based on input signals from the engine coolant temp. sensor to TERMINAL THW of the engine control module, and also the input signals to TERMINAL SP2+ of the engine control module from the vehicle speed sensor devoted to the electronically controlled transmission. Current is then output to the electronically controlled transmission solenoid. When shifting to 1st speed, current flows from TERMINAL S1 of the engine control module to TERMINAL 1 of the electronically controlled transmission solenoid to GROUND, and continuity to the No.1 solenoid causes the shift.

For 2nd speed, current flows from TERMINAL S1 of the engine control module to TERMINAL 1 of the electronically controlled transmission solenoid to GROUND, and from TERMINAL S2 of the engine control module to TERMINAL 2 of the electronically controlled transmission solenoid to GROUND, and continuity to solenoid No.1 and No.2 causes the shift.

For 3rd speed, there is no continuity to No.1 solenoid, only to No.2 causing the shift. Shifting into 4th speed (Overdrive) takes place when there is no continuity to either No.1 or No.2 solenoid.

2. LOCK-UP OPERATION

When the engine control module judges from each signal that lock-up operation conditions have been met, current flows from TERMINAL SL of the engine control module to TERMINAL 3 of the electronically controlled transmission solenoid to GROUND, causing continuity to the lock-up solenoid and causing lock-up operation.

3. STOP LIGHT SW CIRCUIT

If the brake pedal is depressed (Stop light SW on) when driving in lock-up condition, a signal is input to TERMINAL STP of the engine control module, the engine control module operates and continuity to the lock–up solenoid is cut.

4. OVERDRIVE CIRCUIT

* O/D main SW on
  When the O/D main SW is turned on (SW point is open), a signal is input to TERMINAL ODMS of the engine control module and engine control module operation causes gear shift when the conditions for overdrive are met.
* O/D main SW off
  When the O/D main SW is turned off (SW point is closed), a signal is input into TERMINAL ODMS of the engine control module, and turns on the O/D off indicator light. This activates the ECU, and the transmission system is controlled not to shift to overdrive.

ELECTRONICALLY CONTROLLED TRANSMISSION

SERVICE HINTS

E2 ELECTRONICALLY CONTROLLED TRANSMISSION SOLENOID

1, 2, 3–GROUND : Approx. **13** Ω

P1 A/T INDICATOR LIGHT SW [PARK/NEUTRAL POSITION SW]

4–GROUND : Approx. **12** volts with ignition SW **ON** position

S5 (A), (B) STOP LIGHT SW

(A) 2–(A) 1, (B) 2–(B) 1 : Closed with brake pedal depressed

E 5 (A), E 6 (B), E 7 (C), E 8 (D) ENGINE CONTROL MODULE

S1–E1 : **9**–**14** volts
S2, SL–E1 : **0**–**1.5** volts
STP–E1 : **7.5**–**14** volts with brake pedal depressed
: **0**–**1.5** volts with brake pedal released
THW–E2 : **0.2**–**1.0** volts with coolant temp. **80**˚C (**176**˚F)
OIL–E2 : **4**–**5** volts with fluid temp. **20**˚C (**68**˚F)
VTA–E2 : **0.3**–**0.8** volts with throttle valve fully closed
: **3.2**–**4.9** volts with throttle valve fully open
VC–E2 : **4.5**–**5.5** volts
OD1–E1 : **4.5**–**5.5** volts
ODMS–E1 : **9**–**14** volts O/D main SW turned on
: **0** volts O/D main SW turned off
SP1–E1 : Pulse generation with vehicle moving
2–E1 : **10**–**14** volts with shift lever at **2** position
: **0**–**2** volts with shift lever at except **2** position
L–E1 : **10**–**14** volts with shift lever at **L** position
: **0**–**2** volts with shift lever at except **L** position
R–E1 : **10**–**4** volts with shift lever at **R** position
0–**2** volts with shift lever at except **R** position
PWR–E1 : **7.5**–**14** volts with pattern select SW **PWR** position
0–**1.5** volts with pattern select SW **NORM** position
+B–E1 : **9**–**14** volts
BATT–E1 : **9**–**14** volts

: PARTS LOCATION

Code	See Page	Code	See Page	Code	See Page
A12	32	F5	33	J11	33
A23	30 (3RZ–FE)	F8	34	J12	33
C1	30 (3RZ–FE)	H9	33	K1	31 (3RZ–FE)
C2	30 (3RZ–FE)	I1	31 (3RZ–FE)	M1	31 (3RZ–FE)
C6	32	I6	31 (3RZ–FE)	P1	31 (3RZ–FE)
C9	32	I7	31 (3RZ–FE)	P10	31 (3RZ–FE)
C10	32	I8	31 (3RZ–FE)	S5 A	33
D1	30 (3RZ–FE)	I9	31 (3RZ–FE)	S5 B	33
D7	32	I14	33	T1	31 (3RZ–FE)
E1	30 (3RZ–FE)	I20	31 (3RZ–FE)	V3	31 (3RZ–FE)
E3	30 (3RZ–FE)	I21	31 (3RZ–FE)	V4	31 (3RZ–FE)
E5 A	33	I22	31 (3RZ–FE)	V8	31 (3RZ–FE)
E6 B	33	I23	31 (3RZ–FE)	V9	31 (3RZ–FE)
E7 C	33	J9 A	31 (3RZ–FE)	V10	31 (3RZ–FE)
E8 D	33	J10 B	31 (3RZ–FE)		

: RELAY BLOCKS

Code	See Page	Relay Blocks (Relay Block Location)
2	21	R/B No.2 (Engine Compartment Left)

(CALIFORNIA 3RZ–FE)



: JUNCTION BLOCK AND WIRE HARNESS CONNECTOR

Code	See Page	Junction Block and Wire Harness (Connector Location)
1B	22	Cowl Wire and J/B No.1 (Lower Finish Panel)
1F	22	Engine Room Main Wire and J/B No.1 (Lower Finish Panel)
3A	24	Cowl Wire and J/B No.3 (Bihind the Instrument Panel Left)
3D		
3E		
3F		



: CONNECTOR JOINING WIRE HARNESS AND WIRE HARNESS

Code	See Page	Joining Wire Harness and Wire Harness (Connector Location)
IF1	40	Engine Room Main Wire and Cowl Wire (Left Kick Panel)
IJ1	40	Cowl Wire and A/C Sub Wire (Bihind the Glove Box)
IK2	40	Engine Wire and Cowl Wire (Right Kick Panel)
IK3		
IK5		
BN1	42	Frame Wire and Cowl Wire (Under the Driver's Seat)



: GROUND POINTS

Code	See Page	Ground Points Location
EA	38 (3RZ–FE)	Front Left Fender
EF	38 (3RZ–FE)	Ignition Coil Braket
ID	40	Left Kick Panel
IE	40	Around the Right Edge of the Reinforcement
IG	40	Around the Left Edge of the Reinforcement



: SPLICE POINTS

Code	See Page	Wire Harness with Splice Points	Code	See Page	Wire Harness with Splice Points
I9	40	Cowl Wire	I10	40	Engine Wire

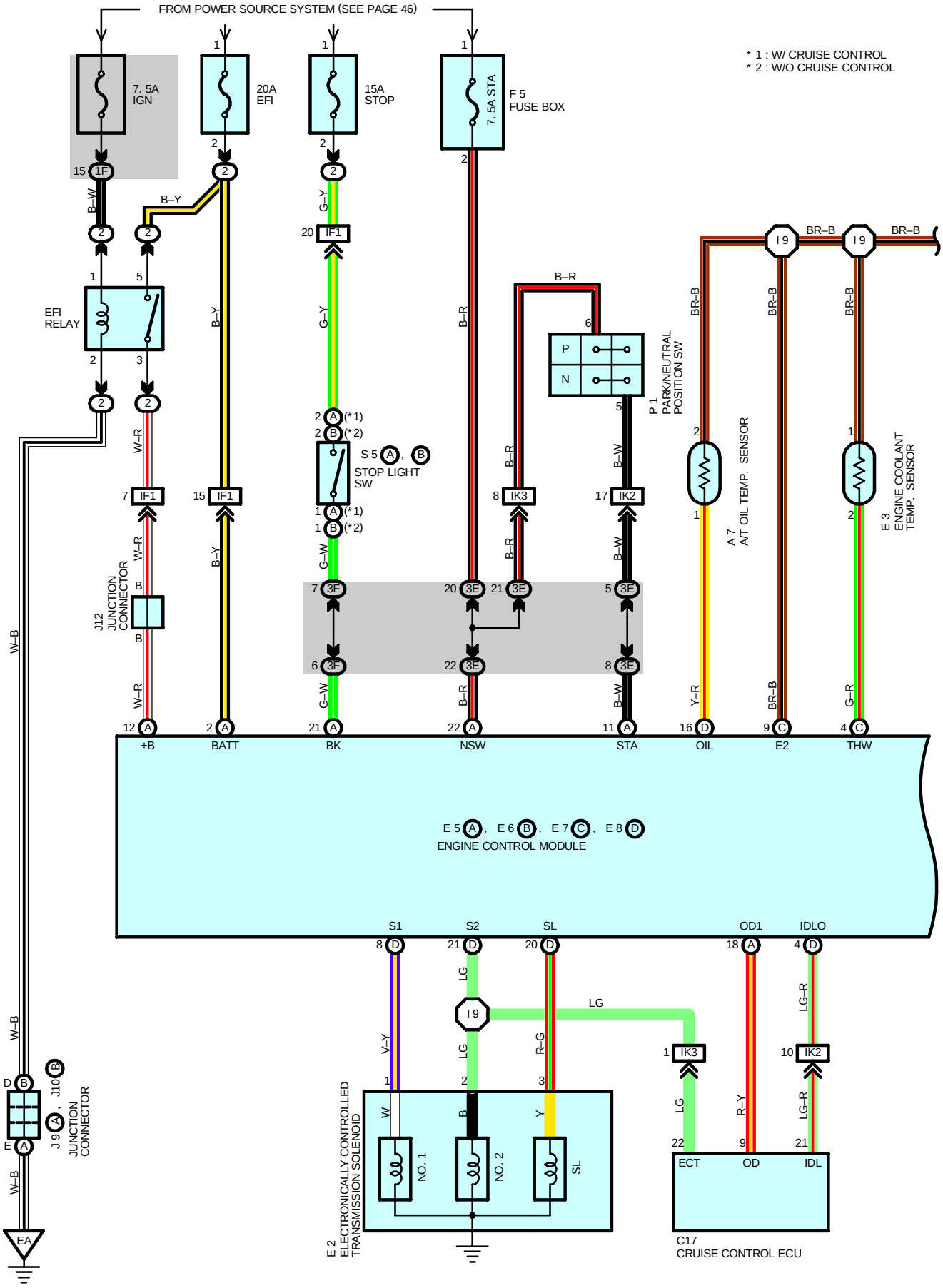
FROM POWER SOURCE SYSTEM (SEE PAGE 46)
* 1 : W/ CRUISE CONTROL
* 2 : W/O CRUISE CONTROL
7. 5A IGN
20A EFI
15A STOP
7. 5A STA
F 5 FUSE BOX
EFI RELAY
S 5 A, B STOP LIGHT SW
P 1 PARK/NEUTRAL POSITION SW
A 7 A/T OIL TEMP. SENSOR
E 3 ENGINE COOLANT TEMP. SENSOR
J12 JUNCTION CONNECTOR
+B
BATT
BK
NSW
STA
OIL
E2
THW
E5 A, E6 B, E7 C, E8 D
ENGINE CONTROL MODULE
S1
S2
SL
OD1
IDLO
E 2 ELECTRONICALLY CONTROLLED TRANSMISSION SOLENOID
NO. 1
NO. 2
SL
J9 A, J10 B JUNCTION CONNECTOR
EA
C17 CRUISE CONTROL ECU
ECT
OD
IDL

(3RZ–FE EXCEPT CALIFORNIA)

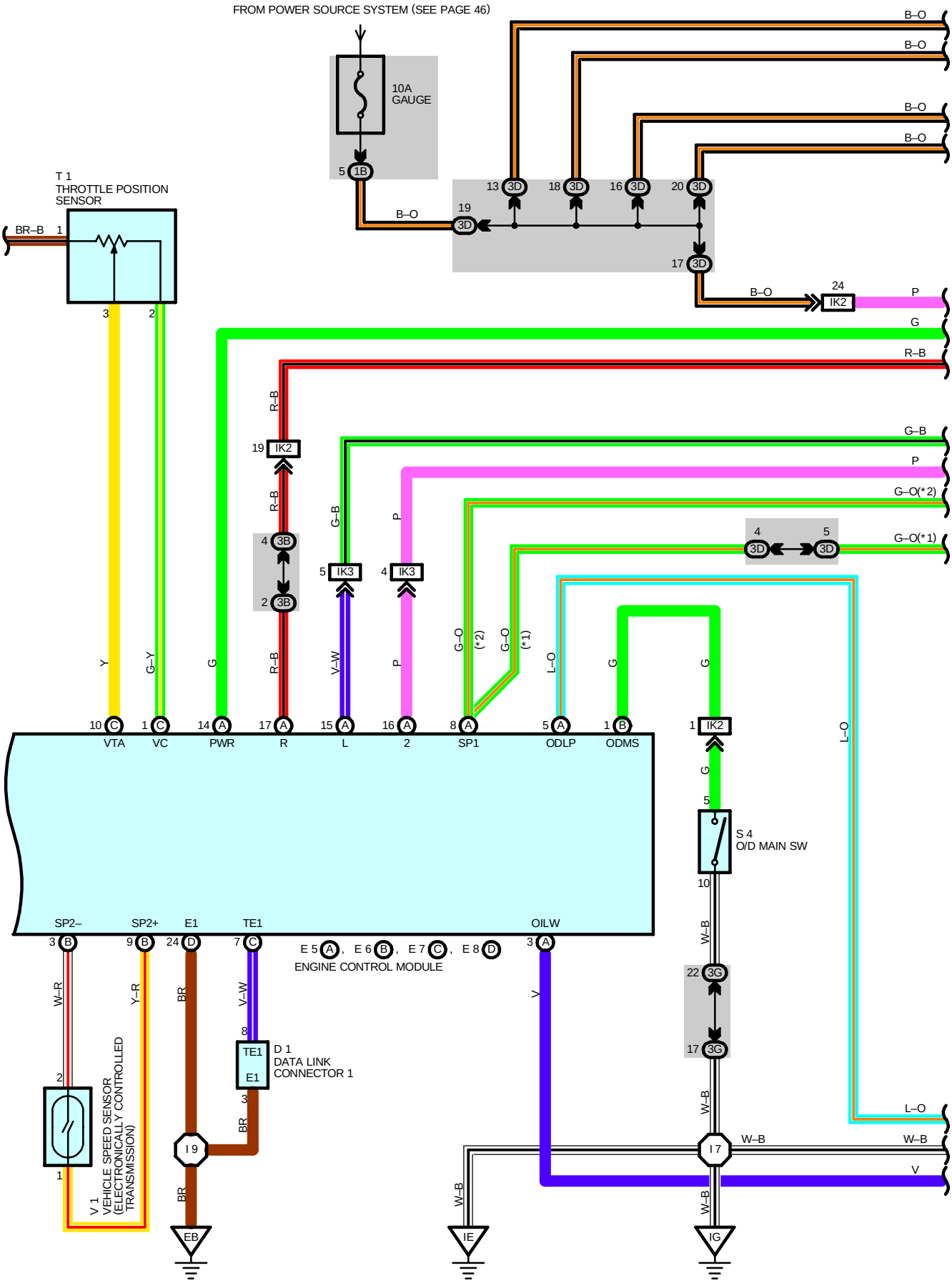

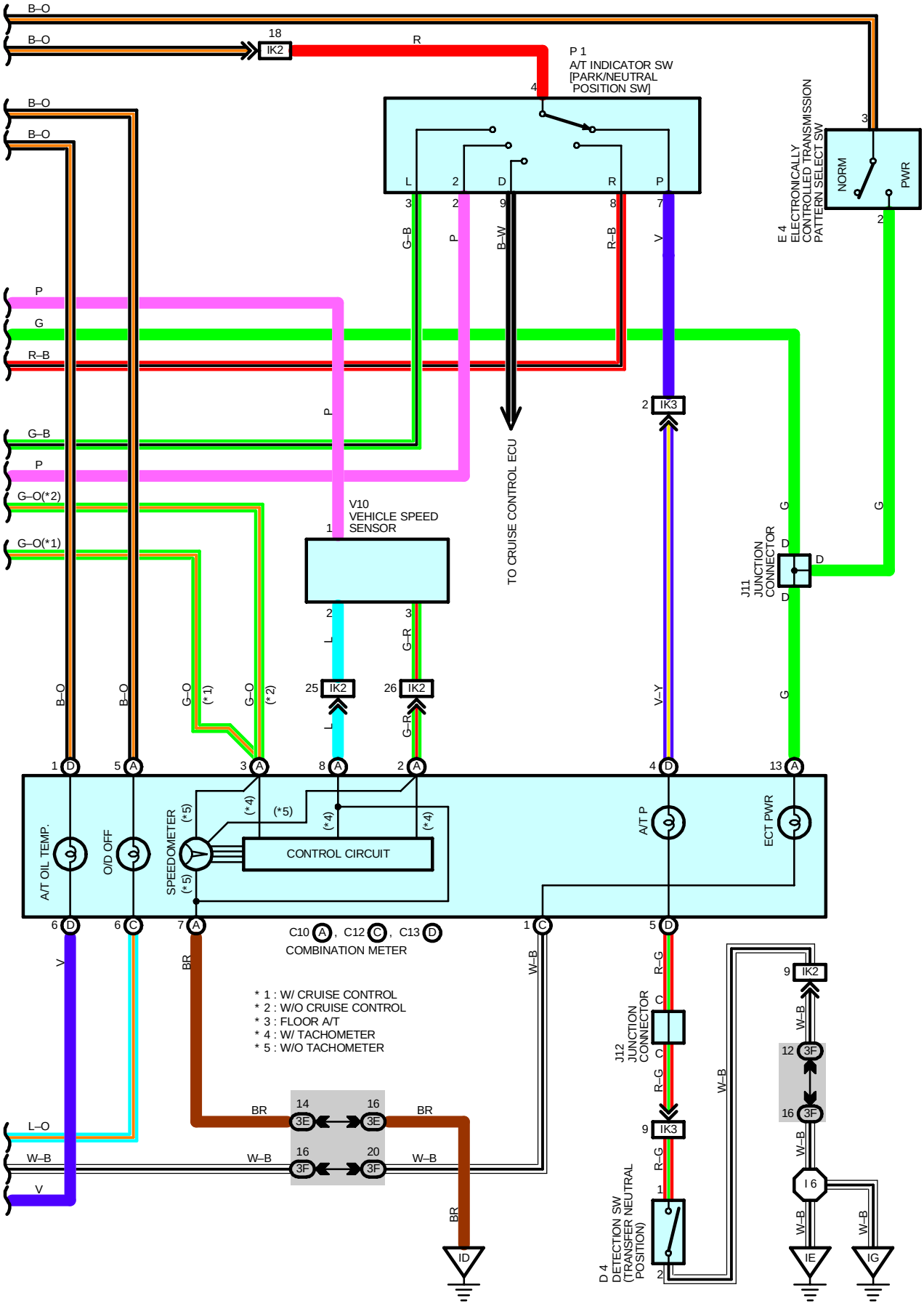
B–O
B–O
18
IK2
R
P 1
A/T INDICATOR SW
[PARK/NEUTRAL
POSITION SW]
4
L
2
D
R
P
3
2
9
8
7
G–B
P
B–W
R–B
V
E 4
ELECTRONICALLY
CONTROLLED TRANSMISSION
PATTERN SELECT SW
NORM
PWR
3
2
P
G
R–B
G–B
P
G–O(*2)
G–O(*1)
V10
VEHICLE SPEED
SENSOR
1
TO CRUISE CONTROL ECU
2
IK3
J11
JUNCTION
CONNECTOR
D
D
D
G
G
G
2
3
L
G–R
25
IK2
26
IK2
B–O
B–O
G–O
(*1)
G–O
(*2)
V–Y
1
D
5
A
3
A
8
A
2
A
4
D
13
A
A/T OIL TEMP.
O/D OFF
SPEEDOMETER
(*5)
(*5)
(*4)
(*5)
(*4)
(*4)
(*4)
CONTROL CIRCUIT
A/T P
ECT PWR
6
D
6
C
7
A
C10 A , C12 C , C13 D
COMBINATION METER
1
C
5
D
V
BR
W–B
R–G
* 1 : W/ CRUISE CONTROL
* 2 : W/O CRUISE CONTROL
* 3 : FLOOR A/T
* 4 : W/ TACHOMETER
* 5 : W/O TACHOMETER
J12
JUNCTION
CONNECTOR
9
IK2
W–B
12
3F
16
3F
BR
14
3E
16
3E
BR
9
IK3
L–O
W–B
16
3F
W–B
20
3F
W–B
I 6
D 4
DETECTION SW
(TRANSFER NEUTRAL
POSITION)
1
2
W–B
W–B
BR
ID
IE
IG

SYSTEM OUTLINE

Previous automatic transmissions have selected each gear shift using mechanically controlled throttle hydraulic pressure, governor hydraulic pressure and lock-up hydraulic pressure. The electronically controlled transmission, however, electrically controls the governor pressure and lock-up pressure through the solenoid valve. Control of the solenoid valve by the engine control module based on the input signals from each sensor makes smooth driving possible by shift selection for each gear which is most appropriate to the driving conditions at that time.

1. GEAR SHIFT OPERATION

During driving, the engine control module selects the shift for each gear which is most appropriate to the driving conditions, based on input signals from the engine coolant temp. sensor to TERMINAL THW of the engine control module, and also the input signals to TERMINAL SP2+ of the engine control module from the vehicle speed sensor devoted to the electronically controlled transmission. Current is then output to the electronically controlled transmission solenoid. When shifting to 1st speed, current flows from TERMINAL S1 of the engine control module to TERMINAL 1 of the electronically controlled transmission solenoid to GROUND, and continuity to the No.1 solenoid causes the shift.

For 2nd speed, current flows from TERMINAL S1 of the engine control module to TERMINAL 1 of the electronically controlled transmission solenoid to GROUND, and from TERMINAL S2 of the engine control module to TERMINAL 2 of the electronically controlled transmission solenoid to GROUND, and continuity to solenoid No.1 and No.2 causes the shift.

For 3rd speed, there is no continuity to No.1 solenoid, only to No.2 causing the shift. Shifting into 4th speed (Overdrive) takes place when there is no continuity to either No.1 or No.2 solenoid.

2. LOCK-UP OPERATION

When the engine control module judges from each signal that lock-up operation conditions have been met, current flows from TERMINAL SL of the engine control module to TERMINAL 3 of the electronically controlled transmission solenoid to GROUND, causing continuity to the lock-up solenoid and causing lock-up operation.

3. STOP LIGHT SW CIRCUIT

If the brake pedal is depressed (Stop light SW on) when driving in lock-up condition, a signal is input to TERMINAL BK of the engine control module, the engine control module operates and continuity to the lock–up solenoid is cut.

4. OVERDRIVE CIRCUIT

* O/D main SW on
  When the O/D main SW is turned on (SW point is open), a signal is input to TERMINAL ODMS of the engine control module and engine control module operation causes gear shift when the conditions for overdrive are met.
* O/D main SW off
  When the O/D main SW is turned off (SW point is closed), a signal is input into TERMINAL ODMS of the engine control module, and turns on the O/D off indicator light. This activates the ECU, and the transmission system is controlled not to shift to overdrive.

ELECTRONICALLY CONTROLLED TRANSMISSION

SERVICE HINTS

E2 ELECTRONICALLY CONTROLLED TRANSMISSION SOLENOID
1, 2, 3–GROUND : Approx. **13** Ω

P1 A/T INDICATOR LIGHT SW [PARK/NEUTRAL POSITION SW]
4–GROUND : Approx. **12** volts with ignition SW **ON** position

S5 (A), (B) STOP LIGHT SW
(A) 2–(A) 1, (B) 2–(B) 1 : Closed with brake pedal depressed

E 5 (A), E 6 (B), E 7 (C), E 8 (D) ENGINE CONTROL MODULE
S1–E1 : **9**–**14** volts
S2, SL–E1 : **0**–**1.5** volts
BK–E1 : **7.5**–**14** volts with brake pedal depressed
: **0**–**1.5** volts with brake pedal released
THW–E2 : **0.2**–**1.0** volts with coolant temp. **80**˚C (**176**˚F)
OIL–E2 : **4**–**5** volts with fluid temp. **20**˚C (**68**˚F)
VTA–E2 : **0.3**–**0.8** volts with throttle valve fully closed
: **3.2**–**4.9** volts with throttle valve fully open
VC–E2 : **4.5**–**5.5** volts
OD1–E1 : **4.5**–**5.5** volts
ODMS–E1 : **9**–**14** volts O/D main SW turned on
: **0** volts O/D main SW turned off
SP1–E1 : Pulse generation with vehicle moving
2–E1 : **10**–**14** volts with shift lever at **2** position
: **0**–**2** volts with shift lever at except **2** position
L–E1 : **10**–**14** volts with shift lever at **L** position
: **0**–**2** volts with shift lever at except **L** position
R–E1 : **10**–**4** volts with shift lever at **R** position
0–**2** volts with shift lever at except **R** position
PWR–E1 : **7.5**–**14** volts with pattern select SW **PWR** position
0–**1.5** volts with pattern select SW **NORM** position
+B–E1 : **9**–**14** volts
BATT–E1 : **9**–**14** volts

: PARTS LOCATION

Code	See Page	Code	See Page	Code	See Page
A7	30 (3RZ–FE)	E4	33	J12	33
C10 A	32	E5 A	33	P1	31 (3RZ–FE)
C12 C	32	E6 B	33	S4	33
C13 D	32	E7 C	33	S5 A	33
C17	32	E8 D	33	S5 B	33
D1	30 (3RZ–FE)	F5	33	T1	31 (3RZ–FE)
D4	30 (3RZ–FE)	J9 A	31 (3RZ–FE)	V1	31 (3RZ–FE)
E2	30 (3RZ–FE)	J10 B	31 (3RZ–FE)	V10	31 (3RZ–FE)
E3	30 (3RZ–FE)	J11	33		

: RELAY BLOCKS

Code	See Page	Relay Blocks (Relay Block Location)
2	21	R/B No.2 (Engine Compartment Left)

(3RZ–FE EXCEPT CALIFORNIA)



: JUNCTION BLOCK AND WIRE HARNESS CONNECTOR

Code	See Page	Junction Block and Wire Harness (Connector Location)
1B	22	Cowl Wire and J/B No.1 (Lower Finish Panel)
1F	22	Engine Room Main Wire and J/B No.1 (Lower Finish Panel)
3B	24	Cowl Wire and J/B No.3 (Bihind the Instrument Panel Left)
3D		
3E		
3F		
3G	26	Cowl Wire and J/B No.3 (Bihind the Instrument Panel Center)



: CONNECTOR JOINING WIRE HARNESS AND WIRE HARNESS

Code	See Page	Joining Wire Harness and Wire Harness (Connector Location)
IF1	40	Engine Room Main Wire and Cowl Wire (Left Kick Panel)
IK2	40	Engine Wire and Cowl Wire (Right Kick Panel)
IK3		



: GROUND POINTS

Code	See Page	Ground Points Location
EA	38 (3RZ–FE)	Front Left Fender
EB	38 (3RZ–FE)	Near the Throttle Body
ID	40	Left Kick Panel
IE	40	Around the Right Edge of the Reinforcement
IG	40	Around the Left Edge of the Reinforcement



: SPLICE POINTS

Code	See Page	Wire Harness with Splice Points	Code	See Page	Wire Harness with Splice Points
I6	40	Cowl Wire	I9	40	Cowl Wire
I7					

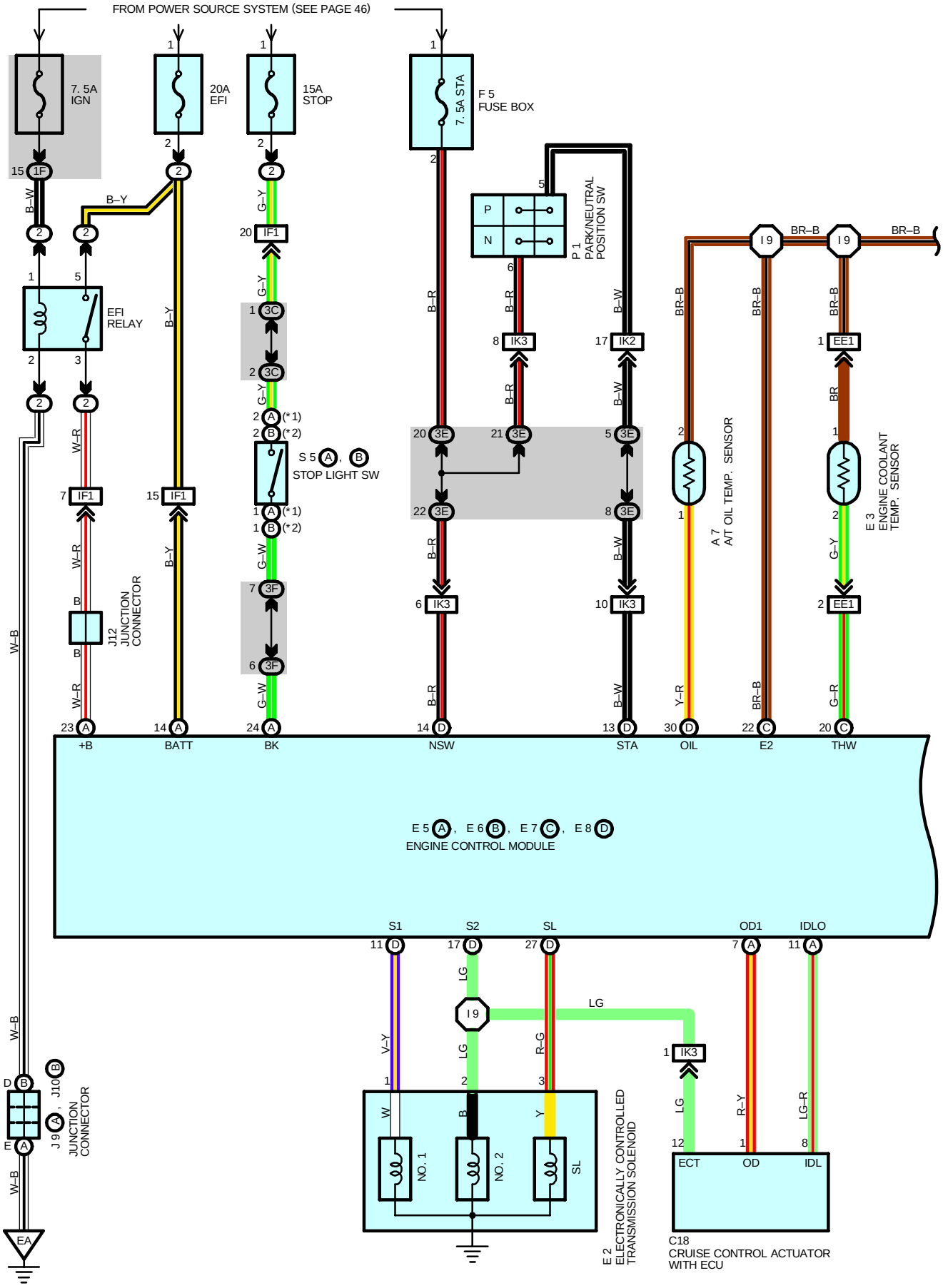
FROM POWER SOURCE SYSTEM (SEE PAGE 46)
7. 5A IGN
20A EFI
15A STOP
7. 5A STA
F 5 FUSE BOX
EFI RELAY
P 1 PARK/NEUTRAL POSITION SW
S 5 A, B STOP LIGHT SW
J12 JUNCTION CONNECTOR
A 7 A/T OIL TEMP. SENSOR
E 3 ENGINE COOLANT TEMP. SENSOR
+B
BATT
BK
NSW
STA
OIL
E2
THW
E 5 A, E 6 B, E 7 C, E 8 D
ENGINE CONTROL MODULE
S1
S2
SL
OD1
IDLO
NO. 1
NO. 2
SL
E 2 ELECTRONICALLY CONTROLLED TRANSMISSION SOLENOID
J 9 A, J10 B JUNCTION CONNECTOR
EA
C18 CRUISE CONTROL ACTUATOR WITH ECU
ECT
OD
IDL

(5VZ–FE EXCEPT CALIFORNIA)

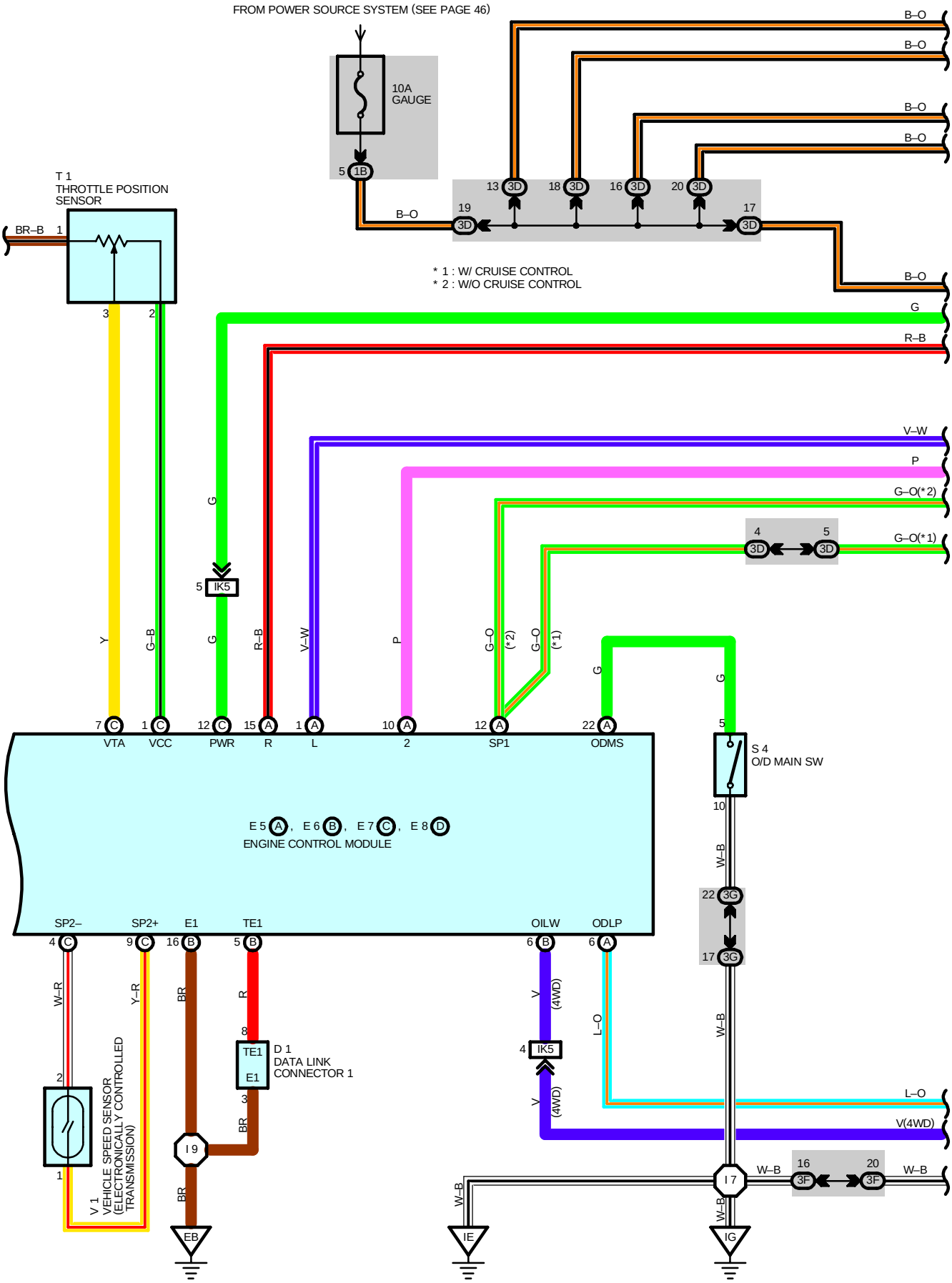

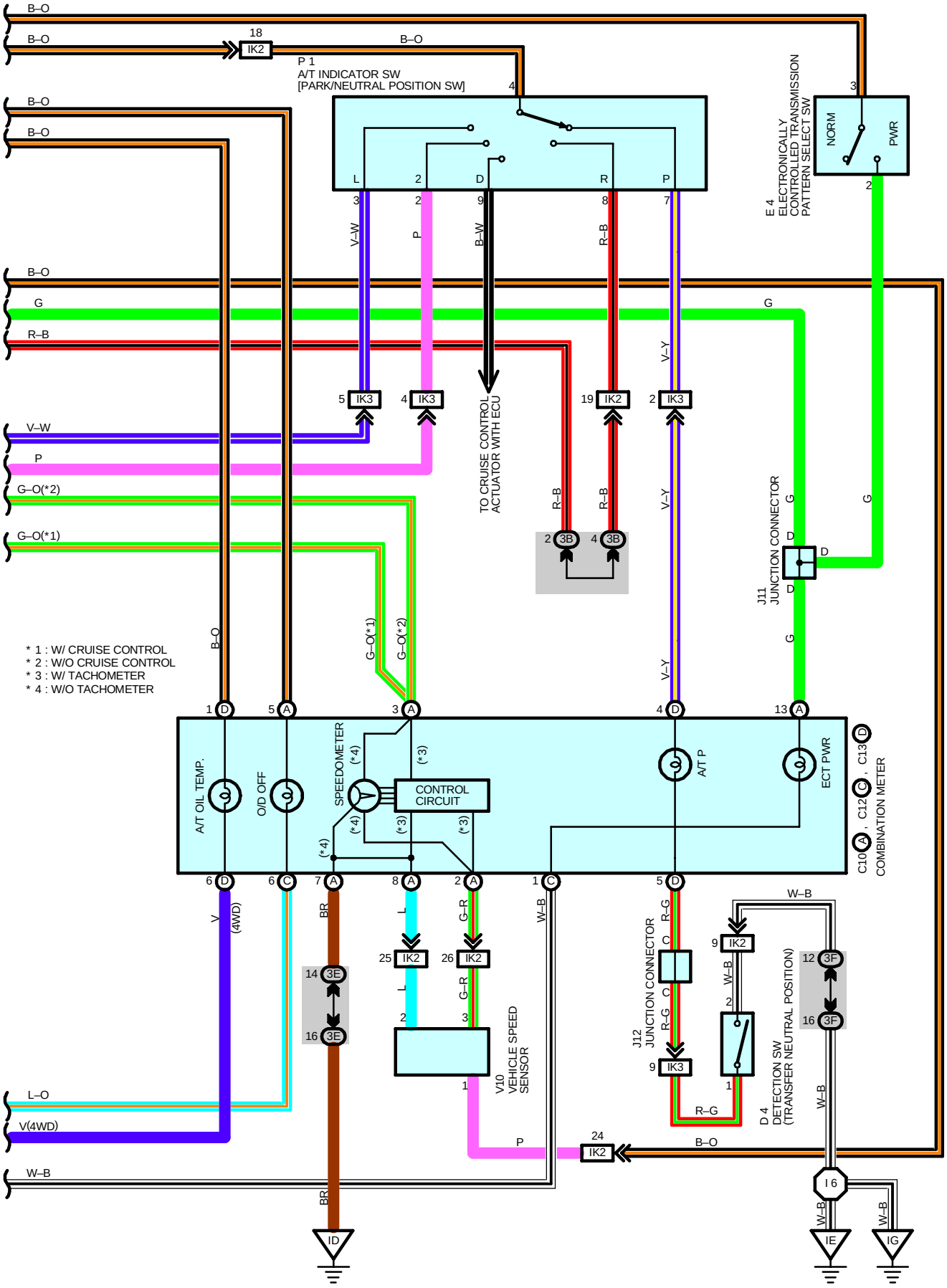
B–O
B–O
18
IK2
B–O
P 1
A/T INDICATOR SW
[PARK/NEUTRAL POSITION SW]
4
L
2
D
R
P
3
2
9
8
7
V–W
P
B–W
R–B
B–O
B–O
G
R–B
V–W
P
G–O(*2)
G–O(*1)
5 IK3
4 IK3
TO CRUISE CONTROL ACTUATOR WITH ECU
19 IK2
2 IK3
R–B
R–B
V–Y
V–Y
2 3B
4 3B
E 4
ELECTRONICALLY CONTROLLED TRANSMISSION PATTERN SELECT SW
NORM
PWR
3
2
G
G
J11
JUNCTION CONNECTOR
D
D
D
G
G
* 1 : W/ CRUISE CONTROL
* 2 : W/O CRUISE CONTROL
* 3 : W/ TACHOMETER
* 4 : W/O TACHOMETER
B–O
G–O(*1)
G–O(*2)
V–Y
1 D
5 A
3 A
4 D
13 A
A/T OIL TEMP.
O/D OFF
SPEEDOMETER
(*4)
(*3)
CONTROL CIRCUIT
A/T P
ECT PWR
C13 D
C12 C
C10 A
COMBINATION METER
6 D
6 C
7 A
8 A
2 A
1 C
5 D
V
(4WD)
BR
L
G–R
W–B
R–G
W–B
14 3E
16 3E
25 IK2
26 IK2
9 IK2
12 3F
16 3F
L
G–R
W–B
2
3
C
C
R–G
J12
JUNCTION CONNECTOR
V10
VEHICLE SPEED SENSOR
1
9 IK3
1
D 4
DETECTION SW
(TRANSFER NEUTRAL POSITION)
R–G
W–B
L–O
V(4WD)
P
24 IK2
B–O
W–B
BR
I 6
W–B
W–B
ID
IE
IG

SYSTEM OUTLINE

Previous automatic transmissions have selected each gear shift using mechanically controlled throttle hydraulic pressure, governor hydraulic pressure and lock-up hydraulic pressure. The electronically controlled transmission, however, electrically controls the governor pressure and lock-up sensor through the solenoid valve. Control of the solenoid valve by the engine control module based on the input signals from each sensor makes smooth driving possible by shift selection for each gear which is most appropriate to the driving conditions at that time.

1. GEAR SHIFT OPERATION

During driving, the engine control module selects the shift for each gear which is most appropriate to the driving conditions, based on input signals from the engine coolant temp. sensor to TERMINAL THW of the engine control module and also the input signals to TERMINAL SP2+ of the engine control module from the vehicle speed sensor devoted to the electronically controlled transmission. Current is then output to the electronically controlled transmission solenoid. When shifting to 1st speed, current flows from TERMINAL S1 of the engine control module to TERMINAL 1 of the electronically controlled transmission solenoid to GROUND, and continuity to the No.1 solenoid causes the shift.

For 2nd speed, current flows from TERMINAL S1 of the engine control module to TERMINAL 1 of the electronically controlled transmission solenoid to GROUND, and from TERMINAL S2 of the engine control module to TERMINAL 2 of the electronically controlled transmission solenoid to GROUND. And continuity to solenoid No.1 and No.2 causes the shift.

For 3rd speed, there is no continuity to No.1 solenoid, only to No.2 causing the shift. Shifting into 4th speed (Overdrive) takes place when there is no continuity to either No.1 or No.2 solenoid.

2. LOCK-UP OPERATION

When the engine control module judges from each signal that lock-up operation conditions have been met, current flows from TERMINAL SL of the engine control module to TERMINAL 3 of the electronically controlled transmission solenoid to GROUND, causing continuity to the lock-up solenoid and causing lock-up operation.

3. STOP LIGHT SW CIRCUIT

If the brake pedal is depressed (Stop light SW on) when driving in lock-up condition, a signal is input to TERMINAL BK of the engine control module, the engine control module operates and continuity to the lock-up solenoid is cut.

4. OVERDRIVE CIRCUIT

* O/D main SW on
  When the O/D main SW is turned on (SW point is open), a signal is input to TERMINAL ODMS of the engine control module and engine control module operation causes gear shift when the conditions for overdrive are met.
* O/D main SW off
  When the O/D main SW is turned off (SW point is closed), a signal is input into TERMINAL ODMS of the engine control module, and turns on the O/D off indicator light. This activates the ECU, and the transmission system is controlled not to shift to overdrive.

5. A/T OIL TEMP. WARNING

When the A/T oil temp. sensor affixed to the transmission case detects that the fluid temp. is 150˚C (302˚F) or more, the engine control module operates and the current flowing through the GAUGE fuse flows to the A/T oil temp. warning light to TERMINAL OILW of the engine control module to GROUND, so that the warning light lights up, informing that the oil temp. is high. When the oil temp. drops to 120˚C (248˚F) or less, the engine control module stops operating and the warning light goes out.

ELECTRONICALLY CONTROLLED TRANSMISSION

SERVICE HINTS

E2 ELECTRONICALLY CONTROLLED TRANSMISSION SOLENOID

1, 2, 3-GROUND : Approx. **13** Ω

P1 PARK/NEUTRAL POSITION SW

4-GROUND : Approx. **12** volts with ignition SW ACC position

O4 (A), S4 (B) O/D MAIN SW

(A) 1-(A)3, (B) 5-(B) 10 : Open with O/D main SW at **ON** position
Closed with O/D main SW at **OFF** position

S5 (A), (B) STOP LIGHT SW

(A) 1-(A) 2, (B) 1-(B) 2 : Closed with brake pedal depressed

E5 (A), E6 (B), E7 (C), E8 (D) ENGINE CONTROL MODULE

S1-E1 : **9**-**14** volts
S2,SL-E1 : **0**-**1.5** volts
BK–E1 : **7.5**–**14** volts with brake pedal depressed
: **0**–**1.5** volts with brake pedal released
THW–E2 : **0.2**–**1.0** volts with coolant temp. **80**˚C (**176**˚F)
OIL–E2 : **4**–**5** volts with fluid temp. **20**˚C (**68**˚F)
VTA–E2 : **0.3**–**0.8** volts with throttle valve fully closed
: **3.2**–**4.9** volts with throttle valve fully open
VCC–E2 : **4.5**–**5.5** volts
OD1–E1 : **4.5**–**5.5** volts
ODMS–E1 : **9**–**14** volts O/D main SW turned on
: **0** volts O/D main SW turned off
SP1–E1 : Pulse generation with vehicle moving
2–E1 : **10**–**14** volts with shift lever at **2** position
: **0**–**2** volts with shift lever at except **2** position
L–E1 : **10**–**14** volts with shift lever at **L** position
: **0**–**2** volts with shift lever at except **L** position
OILW–E1 : **0.1**–**4.9** volts
+B–E1 : **9**–**14** volts
BATT–E1 : **9**–**14** volts

: PARTS LOCATION

Code		See Page	Code		See Page	Code		See Page
A7		28 (5VZ–FE)	E4		33	J12		33
C10	A	32	E5	A	33	P1		29 (5VZ–FE)
C12	C	32	E6	B	33	S4		33
C13	D	32	E7	C	33	S5	A	33
C18		28 (5VZ–FE)	E8	D	33		B	33
D1		28 (5VZ–FE)	F5		33	T1		29 (5VZ–FE)
D4		28 (5VZ–FE)	J9	A	29 (5VZ–FE)	V1		29 (5VZ–FE)
E2		28 (5VZ–FE)	J10	B	29 (5VZ–FE)	V10		29 (5VZ–FE)
E3		28 (5VZ–FE)	J11		33			

: RELAY BLOCKS

Code	See Page	Relay Blocks (Relay Block Location)
2	21	R/B No.2 (Engine Compartment Left)

(5VZ–FE EXCEPT CALIFORNIA)

 **: JUNCTION BLOCK AND WIRE HARNESS CONNECTOR**

Code	See Page	Junction Block and Wire Harness (Connector Location)
1B	22	Cowl Wire and J/B No.1 (Lower Finish Panel)
1F	22	Engine Room Main Wire and J/B No.1 (Lower Finish Panel)
3B	24	Cowl Wire and J/B No.3 (Bihind the Instrument Panel Left)
3C		
3D		
3E		
3F		
3G	26	Cowl Wire and J/B No.3 (Bihind the Instrument Panel Center)

 **: CONNECTOR JOINING WIRE HARNESS AND WIRE HARNESS**

Code	See Page	Joining Wire Harness and Wire Harness (Connector Location)
EE1	36 (5VZ–FE)	Engine Wire and Sensor Wire (Over the Cylinder Head)
IF1	40	Engine Room Main Wire and Cowl Wire (Left Kick Panel)
IK2	40	Engine Wire and Cowl Wire (Right Kick Panel)
IK3		
IK5		

 **: GROUND POINTS**

Code	See Page	Ground Points Location
EA	36 (5VZ–FE)	Front Left Fender
EB	36 (5VZ–FE)	Under the Data Link Connector 1
ID	40	Left Kick Panel
IE	40	Around the Right Edge of the Reinforcement
IG	40	Around the Left Edge of the Reinforcement

 **: SPLICE POINTS**

Code	See Page	Wire Harness with Splice Points	Code	See Page	Wire Harness with Splice Points
I6	40	Cowl Wire	I9	40	Cowl Wire
I7					

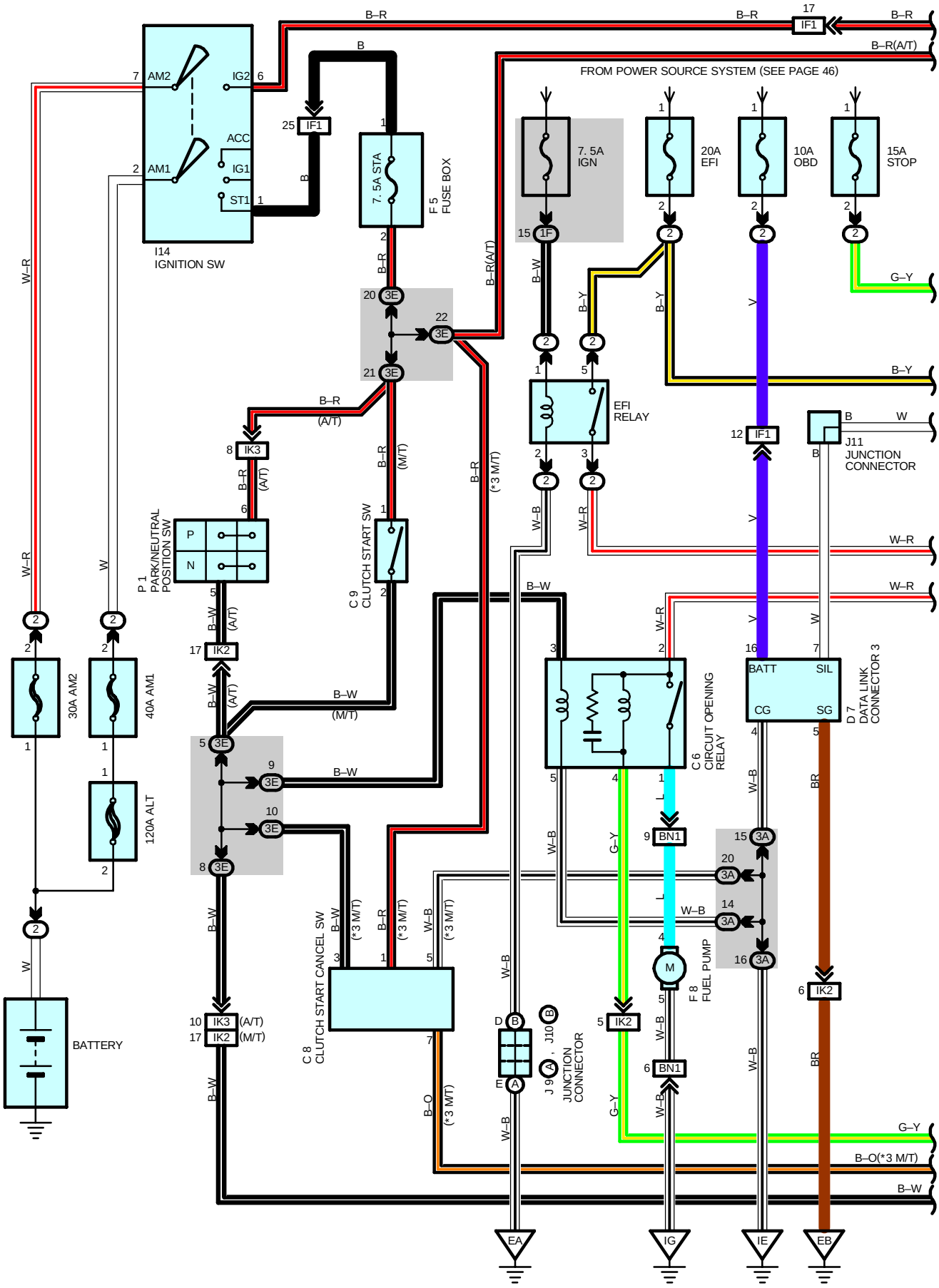
FROM POWER SOURCE SYSTEM (SEE PAGE 46)
I14 IGNITION SW
AM2
AM1
IG2
ACC
IG1
ST1
F 5 FUSE BOX
7. 5A STA
7. 5A IGN
20A EFI
10A OBD
15A STOP
EFI RELAY
J11 JUNCTION CONNECTOR
P 1 PARK/NEUTRAL POSITION SW
C 9 CLUTCH START SW
C 6 CIRCUIT OPENING RELAY
D 7 DATA LINK CONNECTOR 3
BATT
SIL
CG
SG
30A AM2
40A AM1
120A ALT
BATTERY
C 8 CLUTCH START CANCEL SW
F 8 FUEL PUMP
J 9 , J10 JUNCTION CONNECTOR
EA
IG
IE
EB

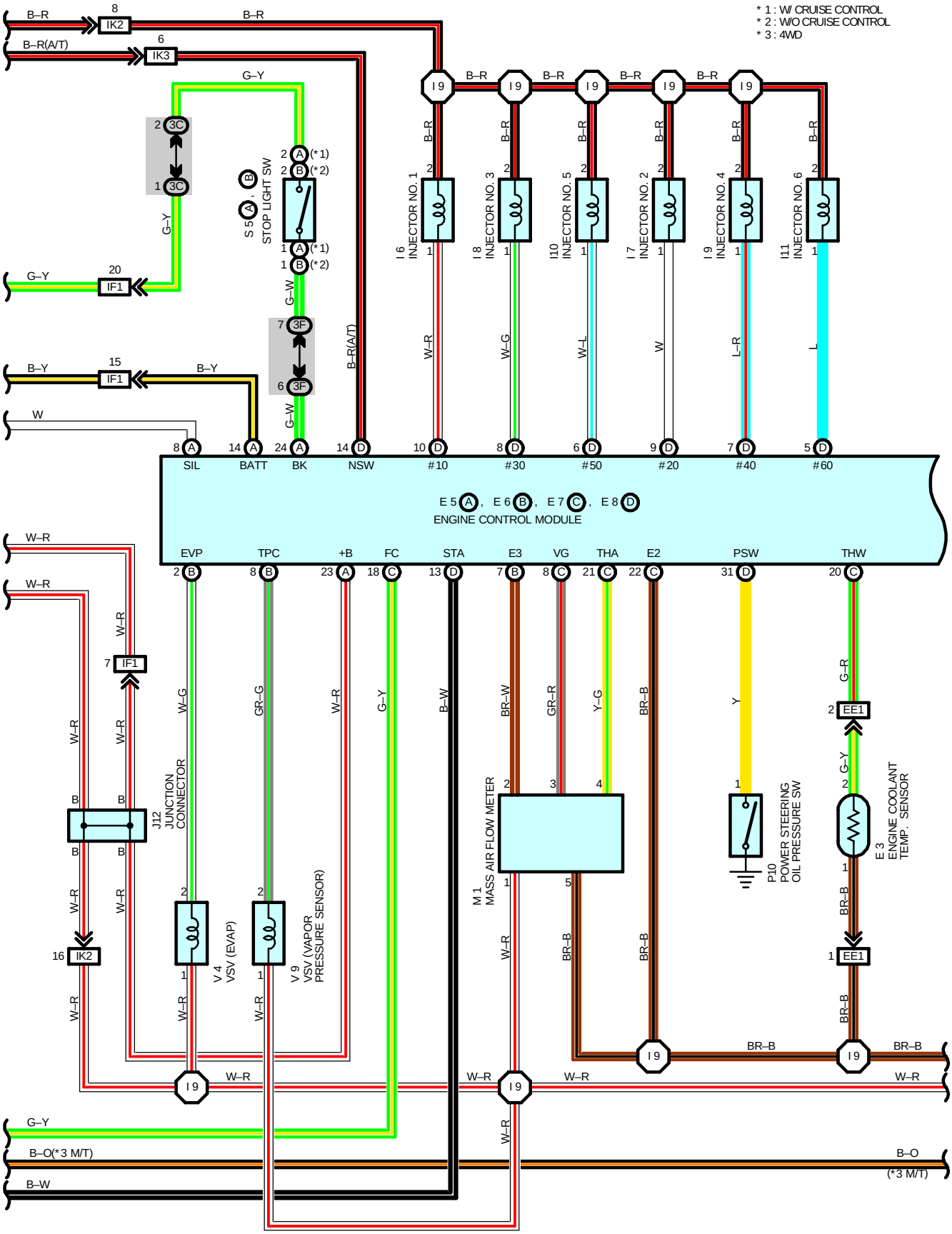
* 1 : W/ CRUISE CONTROL
* 2 : W/O CRUISE CONTROL
* 3 : 4WD
B–R
B–R(A/T)
G–Y
B–Y
W
W–R
G–W
B–R(A/T)
STOP LIGHT SW
S 5
I 6 INJECTOR NO. 1
I 8 INJECTOR NO. 3
I10 INJECTOR NO. 5
I 7 INJECTOR NO. 2
I 9 INJECTOR NO. 4
I11 INJECTOR NO. 6
W–R
W–G
W–L
L–R
L
SIL
BATT
BK
NSW
#10
#30
#50
#20
#40
#60
E 5 , E 6 , E 7 , E 8
ENGINE CONTROL MODULE
EVP
TPC
+B
FC
STA
E3
VG
THA
E2
PSW
THW
J12 JUNCTION CONNECTOR
V 4 VSV (EVAP)
V 9 VSV (VAPOR PRESSURE SENSOR)
M 1 MASS AIR FLOW METER
P10 POWER STEERING OIL PRESSURE SW
E 3 ENGINE COOLANT TEMP. SENSOR
BR–W
GR–G
GR–R
Y–G
BR–B
Y
G–R
B–O(*3 M/T)
B–O
(*3 M/T)
B–W

ENGINE CONTROL (5VZ–FE EXCEPT CALIFORNIA)

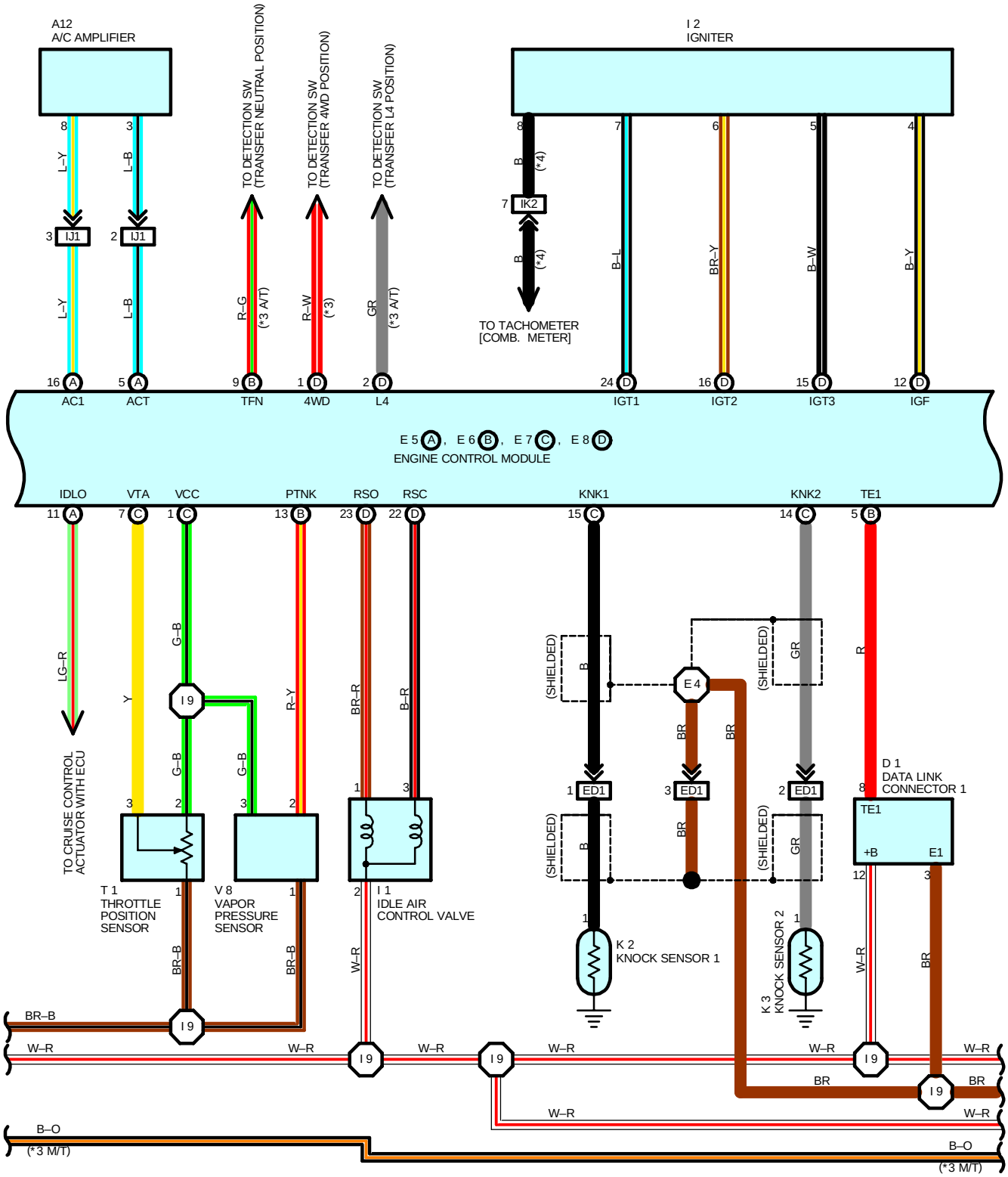

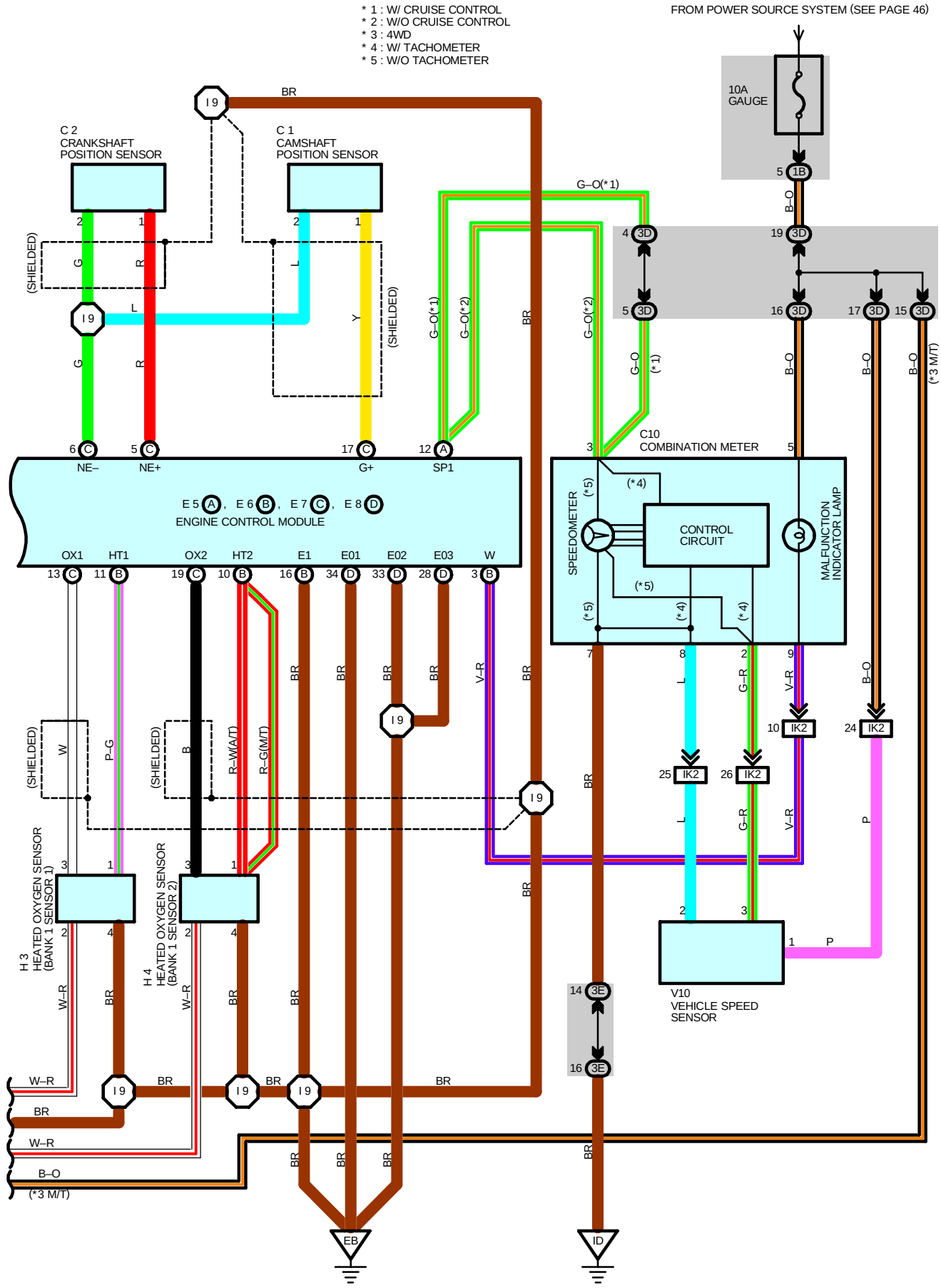
* 1 : W/ CRUISE CONTROL
* 2 : W/O CRUISE CONTROL
* 3 : 4WD
* 4 : W/ TACHOMETER
* 5 : W/O TACHOMETER
FROM POWER SOURCE SYSTEM (SEE PAGE 46)
10A GAUGE
C 2 CRANKSHAFT POSITION SENSOR
C 1 CAMSHAFT POSITION SENSOR
(SHIELDED)
G–O(*1)
G–O(*2)
G–O
(*1)
B–O
(*3 M/T)
C10 COMBINATION METER
SPEEDOMETER
CONTROL CIRCUIT
MALFUNCTION INDICATOR LAMP
NE–
NE+
G+
SP1
E5 A, E6 B, E7 C, E8 D
ENGINE CONTROL MODULE
OX1
HT1
OX2
HT2
E1
E01
E02
E03
W
H3 HEATED OXYGEN SENSOR (BANK 1 SENSOR 1)
H4 HEATED OXYGEN SENSOR (BANK 1 SENSOR 2)
R–W(A/T)
R–G(M/T)
V10 VEHICLE SPEED SENSOR
EB
ID

ENGINE CONTROL (5VZ–FE EXCEPT CALIFORNIA)

SYSTEM OUTLINE

The engine control system utilizes a microcomputer and maintains overall control of the engine, transmission, etc. An outline of engine control is given here.

1. INPUT SIGNAL

(1) Engine coolant temp. signal system

The engine coolant temp. sensor detects the engine coolant temp. and has a built–in thermistor with a resistance which varies according to the water temp. Thus the water temp. is input in the form of a control signal to TERMINAL THW of the engine control module.

(2) Intake air temp. signal system

The intake air temp. sensor is installed inside the mass air flow meter and detects the intake air temp., which is input as a control signal to TERMINAL THA of the engine control module.

(3) Heated oxygen sensor signal system

The oxygen density in the exhaust emissions is detected and input as a control signal to TERMINAL OX1 or OX2 of the engine control module. To maintain stable detection performance by the heated oxygen sensor, a heater is used for warming the sensor. The heater is also controlled by the engine control module (HT1 or HT2).

(4) RPM signal system

Camshaft position and crankshaft position are detected by the camshaft position sensor and crankshaft position sensor, camshaft position is input as a control signal to TERMINAL G+ of the engine control module, and engine RPM is input to TERMINAL NE+.

(5) Throttle signal system

The throttle position sensor detects the throttle valve opening angle, which is input as a control signal to TERMINAL VTA of the engine control module.

(6) Vehicle speed signal system

The vehicle speed sensor detects the vehicle speed and inputs a control signal to TERMINAL SP1 of the engine control module via the combination meter.

(7) A/C SW signal system

The operating voltage of the A/C magnetic clutch is detected and input in the form of a control signal to TERMINAL AC1 of the engine control module.

(8) Battery signal system

Voltage is constantly applied to TERMINAL BATT of the engine control module. When the ignition SW is turned to on, voltage for engine control module operation is applied via the EFI relay to TERMINAL +B of the engine control module.

(9) Intake air volume signal system

Intake air volume is detected by the mass air flow meter and a signal is input into TERMINAL VG of the engine control module as a control signal.

(10) Stop light SW signal system

The stop light SW is used to detect whether or not the vehicle is braking and the information is input as a control signal to TERMINAL BK of the engine control module.

(11) Starter signal system

To confirm that the engine is cranking, the voltage applied to the starter motor during cranking is detected and is input as a control signal to TERMINAL STA of the engine control module.

(12) Engine knock signal system

Engine knocking is detected by the knock sensor 1 and 2 and the signals are input to TERMINALS KNK1 and KNK2 of the engine control module.

(13) 4WD signal system

Whether or not the vehicle is operating in 4WD mode is determined, and a control signal is input to TERMINAL 4WD of the engine control module.

2. CONTROL SYSTEM

* SFI system
  The SFI system monitors the engine conditions through the signals (Input signals (1 to 13)) input from each sensor to the engine control module. Based on this data and the program memorized in the engine control module, the most appropriate fuel injection timing is decided and current is output to TERMINALS #10, #20, #30, #40, #50 and #60 of the engine control module, causing the injectors to operate (to inject fuel). It is this system which, through the work of the engine control module, finely controls fuel injection in response to driving conditions.
* Electronic Spark Advance system
  The ESA system monitors the engine conditions using the signals (input signals (1, 4, 5 to 7, 9, 11, 12)) input to the engine control module from each sensor. Based on this data and the program memorized in the engine control module, the most appropriate ignition timing is decided and current is output to TERMINALS IGT1,IGT2 and IGT3 of the engine control module. This output controls the igniter to produce the most appropriate ignition timing for the driving conditions.
* Heated oxygen sensor heater control system
  The heated oxygen sensor heater control system turns the heater to on when the intake air volume is low (Temp. of exhaust emissions low), and warms up the heated oxygen sensor to improve detection performance of the sensor. The engine control module evaluates the signals (Input signals (1, 4, 8, 9, 11)) from each sensor, current is output to TERMINAL HT1 or HT2 and controls the heater.

3. DIAGNOSIS SYSTEM

With the diagnosis system, when there is a malfunction in the ECU signal system, the malfunctioning system is recorded in the memory. The malfunctioning system can then be found by reading the display (Code) of the malfunction indicator lamp.

4. FAIL–SAFE SYSTEM

When a malfunction occurs in any system, if there is a possibility of engine trouble being caused by continued control based on the signals from that system, the fail–safe system either controls the system by using data (Standard values) recorded in the engine control module memory or else stops the engine.

ENGINE CONTROL (5VZ–FE EXCEPT CALIFORNIA)

SERVICE HINTS

EFI RELAY [R/B NO.2]

5–3 : Closed with ignition SW at **ON** or **ST** position

C6 CIRCUIT OPENING RELAY

1–2 : Closed with starter running or engine running

I6, I7, I8, I9, I10, I11 INJECTOR

1–2 : **13.4**–**14.2** Ω

T1 THROTTLE POSITION SENSOR

2–1 : **4**–**9** kΩ

E3 ENGINE COOLANT TEMP. SENSOR

1–2 : **10**–**20** kΩ (**–20**˚C, **–4**˚F)
4–**7** kΩ (**0**˚C, **32**˚F)
2–**3** kΩ (**20**˚C, **68**˚F)
0.9–**1.3** kΩ (**40**˚C, **104**˚F)
0.4–**0.7** kΩ (**60**˚C, **140**˚F)
0.2–**0.4** kΩ (**80**˚C, **176**˚F)

E5 (A), E6 (B), E7 (C), E8 (D) ENGINE CONTROL MODULE

Voltage at engine control module wiring connectors
+B–E1 : **9**–**14** volts (Ignition SW on)
BATT–E1 : **9**–**14** volts (Always)
VCC–E2 : **4.5**–**5.5** volts (Ignition SW on)
VTA–E2 : **0.3**–**0.8** volts (Ignition SW on and throttle valve fully closed)
3.2–**4.9** volts (Ignition SW on and throttle valve fully open)
STA–E1 : **6** volts or more (Ignition SW at **ST** position)
W–E1 : **9**–**14** volts (No trouble and engine running)
THA–E2 : **0.5**–**3.4** volts (Ignition SW on and intake air temp. **20**˚C, **68**˚F)
THW–E2 : **0.2**–**1.0** volts (Ignition SW on and coolant temp. **80**˚C, **176**˚F)
SP1–E1 : Pulse generation with vehicle moving
BK–E1 : **7.5**–**14** volts (Stop light SW on)
IGT1, IGT2, IGT3–E1 : Pulse generation (Cranking or idling)
#10, #20, #30, #40, #50, #60–E1 : **9**–**14** volts (Ignition SW on)

RESISTANCE AT ECU WIRING CONNECTOR

(Disconnect wiring connector)
VTA–E2 : **3.3**–**10** kΩ (Throttle valve fully open)
0.2–**0.8** kΩ (Throttle valve fully closed)
THA–E2 : **2**–**3** kΩ (Intake air temp. **20**˚C, **68**˚F)
THW–E2 : **0.2**–**0.4** KΩ (Coolant temp. **80**˚C, **178**˚F)
+B–E1 : **0.2**–**0.4** kΩ
NE+ –E1 : **140**–**180** Ω

○ : PARTS LOCATION

Code	See Page	Code	See Page	Code	See Page
A12	32	F8	34	J12	33
C1	28 (5VZ–FE)	H3	28 (5VZ–FE)	K2	29 (5VZ–FE)
C2	28 (5VZ–FE)	H4	28 (5VZ–FE)	K3	29 (5VZ–FE)
C6	32	I1	29 (5VZ–FE)	M1	29 (5VZ–FE)
C8	32	I2	29 (5VZ–FE)	P1	29 (5VZ–FE)
C9	32	I6	29 (5VZ–FE)	P10	29 (5VZ–FE)
C10	32	I7	29 (5VZ–FE)	S5 A	33
D1	28 (5VZ–FE)	I8	29 (5VZ–FE)	S5 B	33
D7	32	I9	29 (5VZ–FE)	T1	29 (5VZ–FE)
E3	28 (5VZ–FE)	I10	29 (5VZ–FE)	V4	29 (5VZ–FE)
E5 A	33	I11	29 (5VZ–FE)	V8	29 (5VZ–FE)
E6 B	33	I14	33	V9	29 (5VZ–FE)
E7 C	33	J9 A	29 (5VZ–FE)	V10	29 (5VZ–FE)
E8 D	33	J10 B	29 (5VZ–FE)		
F5	33	J11	33		

: RELAY BLOCKS

Code	See Page	Relay Blocks (Relay Block Location)
2	21	R/B No.2 (Engine Compartment Left)

: JUNCTION BLOCK AND WIRE HARNESS CONNECTOR

Code	See Page	Junction Block and Wire Harness (Connector Location)
1B	22	Cowl Wire and J/B No.1 (Lower Finish Panel)
1F	22	Engine Room Main Wire and J/B No.1 (Lower Finish Panel)
3A	24	Cowl Wire and J/B No.3 (Bihind the Instrument Panel Left)
3C		
3D		
3E		
3F		

: CONNECTOR JOINING WIRE HARNESS AND WIRE HARNESS

Code	See Page	Joining Wire Harness and Wire Harness (Connector Location)
ED1	36 (5VZ–FE)	Sensor Wire and Engine Wire (Over the Cylinder Head)
EE1	36 (5VZ–FE)	Engine Wire and Sensor Wire (Over the Cylinder Head)
IF1	40	Engine Room Main Wire and Cowl Wire (Left Kick Panel)
IJ1	40	Cowl Wire and A/C Sub Wire (Bihind the Glove Box)
IK2	40	Engine Wire and Cowl Wire (Right Kick Panel)
IK3		
BN1	42	Frame Wire and Cowl Wire (Under the Driver's Seat)

: GROUND POINTS

Code	See Page	Ground Points Location
EA	36 (5VZ–FE)	Front Left Fender
EB	36 (5VZ–FE)	Under the Data Link Connector 1
ID	40	Left Kick Panel
IE	40	Around the Right Edge of the Reinforcement
IG	40	Around the Left Edge of the Reinforcement

: SPLICE POINTS

Code	See Page	Wire Harness with Splice Points	Code	See Page	Wire Harness with Splice Points
E4	36 (5VZ–FE)	Engine Room Main Wire	I9	40	Cowl Wire

SHIFT LOCK (FLOOR A/T)

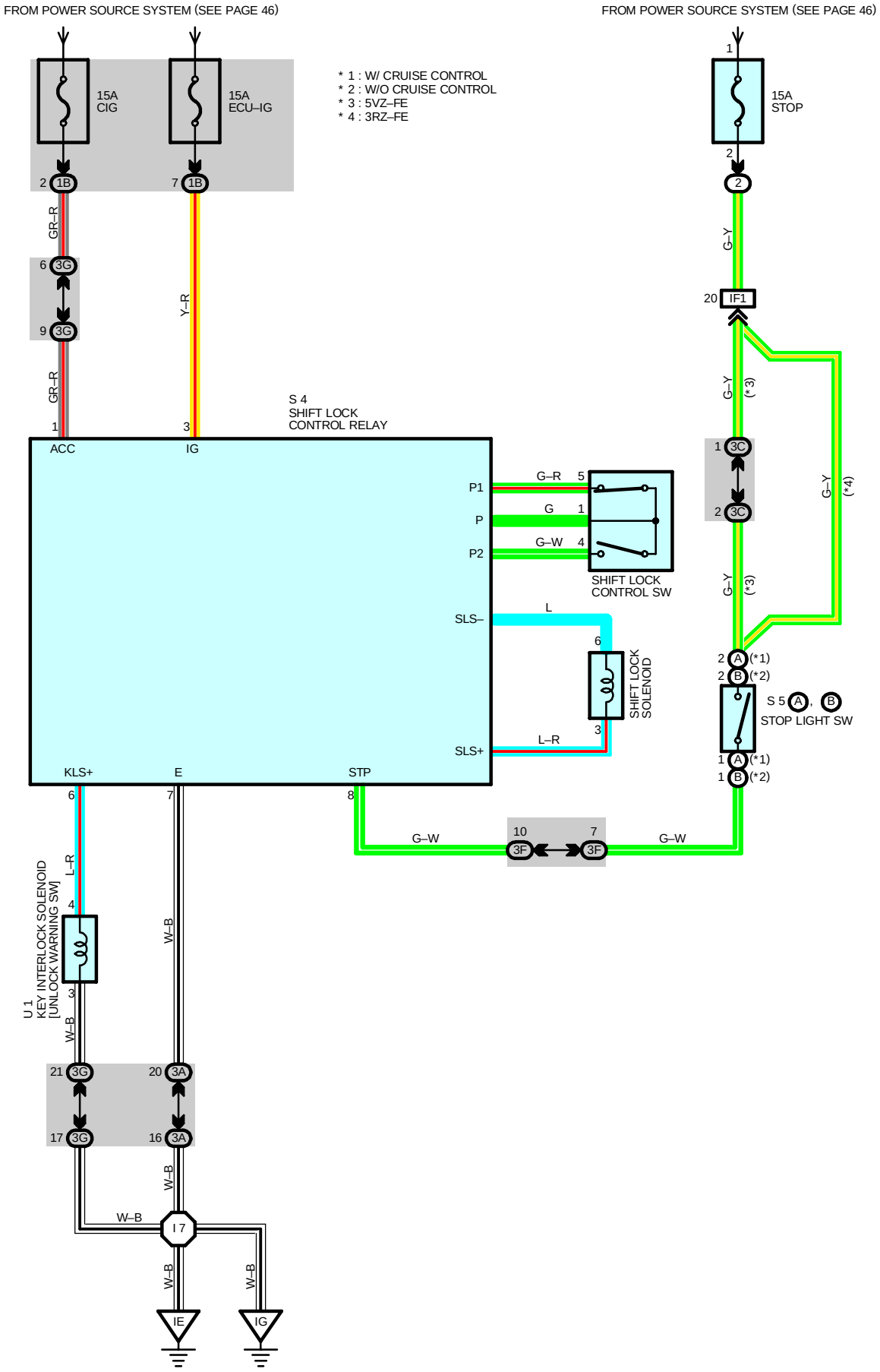

SYSTEM OUTLINE

When the ignition SW is turned to ACC position, the current from the CIG fuse flows to TERMINAL 1 of the shift lock control relay. In the ON position, the current from the ECU–IG fuse flows to TERMINAL 3 of the relay.

1. SHIFT LOCK MECHANISM

With the ignition SW on, when a signal that the brake pedal is depressed (Stop light SW on) and a signal that the shift lever is put in P position (Continuity between P1 and P of the shift lock control SW) are input to the relay, the relay operates and current flows from TERMINAL 3 of the relay to TERMINAL SLS+ to TERMINAL 3 of the shift lock solenoid to TERMINAL 6 to TERMINAL SLS– of the relay to TERMINAL 7 to GROUND. This causes the shift lock solenoid to turn on (Plate stopper disengages.) and the shift lever can shift into a position other than P position.

2. KEY INTERLOCK MECHANISM

With the ignition SW at ON or ACC position, when the shift lever is put in P position (No continuity between P2 and P of the shift lock control SW), the current flowing from TERMINAL 6 of the relay to key interlock solenoid is cut off. This causes the key interlock solenoid to turn off (Lock lever disengages from LOCK position.) and the ignition key can be turned from ACC to LOCK position.

SERVICE HINTS

S4 SHIFT LOCK CONTROL RELAY

1–GROUND : Approx. **12** volts with the ignition SW at **ACC** or **ON** position
3–GROUND : Approx. **12** volts with the ignition SW at **ON** position
7–GROUND : Always continuity
8–GROUND : Approx. **12** volts with the brake pedal depressed

: PARTS LOCATION

Code		See Page	Code		See Page	Code	See Page
S4		33	S5	B	33		
S5	A	33	U1		33		

: RELAY BLOCKS

Code	See Page	Relay Blocks (Relay Block Location)
2	21	R/B No.2 (Engine Compartment Left)

: JUNCTION BLOCK AND WIRE HARNESS CONNECTOR

Code	See Page	Junction Block and Wire Harness (Connector Location)
1B	22	Cowl Wire and J/B No.1 (Lower Finish Panel)
3A	24	Cowl Wire and J/B No.3 (Bihind the Instrument Panel Left)
3C		
3F		
3G	26	Cowl Wire and J/B No.3 (Bihind the Instrument Panel Center)

: CONNECTOR JOINING WIRE HARNESS AND WIRE HARNESS

Code	See Page	Joining Wire Harness and Wire Harness (Connector Location)
IF1	40	Engine Room Main Wire and Cowl Wire (Left Kick Panel)

: GROUND POINTS

Code	See Page	Ground Points Location
IE	40	Around the Right Edge of the Reinforcement
IG	40	Around the Left Edge of the Reinforcement

: SPLICE POINTS

Code	See Page	Wire Harness with Splice Points	Code	See Page	Wire Harness with Splice Points
I7	40	Cowl Wire			

E GLOSSARY OF TERMS AND SYMBOLS

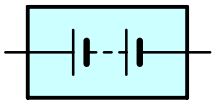

BATTERY
Stores chemical energy and converts it into electrical energy. Provides DC current for the auto's various electrical circuits.

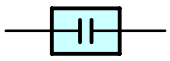

CAPACITOR (Condenser)
A small holding unit for temporary storage of electrical voltage.

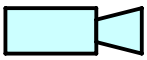

CIGARETTE LIGHTER
An electric resistance heating element.

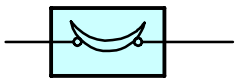

CIRCUIT BREAKER
Basically a reusable fuse, a circuit breaker will heat and open if too much current flows through it. Some units automatically reset when cool, others must be manually reset.



DIODE
A semiconductor which allows current flow in only one direction.



DIODE, ZENER
A diode which allows current flow in one direction but blocks reverse flow only up to a specific voltage. Above that potential, it passes the excess voltage. This acts as a simple voltage regulator.

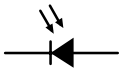

PHOTODIODE
The photodiode is a semiconductor which controls the current flow according to the amount of light.

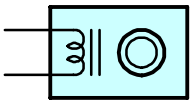

DISTRIBUTOR, IIA
Channels high–voltage current from the ignition coil to the individual spark plugs.

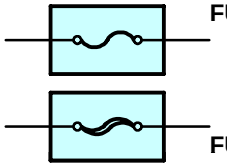

FUSE
A thin metal strip which burns through when too much current flows through it, thereby stopping current flow and protecting a circuit from damage.

(for Medium Current Fuse)

FUSIBLE LINK
A heavy–gauge wire placed in high amperage circuits which burns through on overloads, thereby protecting the circuit. The numbers indicate the crosssection surface area of the wires.

(for High Current Fuse or Fusible Link)



GROUND
The point at which wiring attaches to the Body, thereby providing a return path for an electrical circuit; without a ground, current cannot flow.

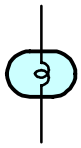

1. SINGLE FILAMENT



2. DOUBLE FILAMENT

HEADLIGHTS
Current flow causes a headlight filament to heat up and emit light. A headlight may have either a single (1) filament or a double (2) filament

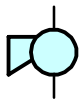

HORN
An electric device which sounds a loud audible signal.

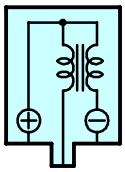

IGNITION COIL
Converts low–voltage DC current into high–voltage ignition current for firing the spark plugs.



LIGHT
Current flow through a filament causes the filament to heat up and emit light.



LED (LIGHT EMITTING DIODE)
Upon current flow, these diodes emit light without producing the heat of a comparable light.



METER, ANALOG
Current flow activates a magnetic coil which causes a needle to move, thereby providing a relative display against a background calibration.



METER, DIGITAL
Current flow activates one or many LED's, LCD's, or fluorescent displays, which provide a relative or digital display.



MOTOR
A power unit which converts electrical energy into mechanical energy, especially rotary motion.

RELAY

Basically, an electrically operated switch which may be normally closed (1) or open (2). Current flow through a small coil creates a magnetic field which either opens or closes an attached switch.

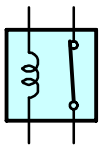

1. NORMALLY CLOSED

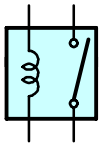

2. NORMALLY OPEN

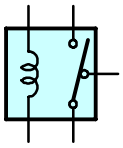

RELAY, DOUBLE THROW

A relay which passes current through one set of contacts or the other.

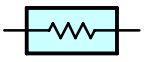

RESISTOR

An electrical component with a fixed resistance, placed in a circuit to reduce voltage to a specific value.

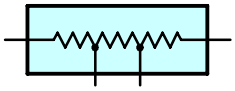

RESISTOR, TAPPED

A resistor which supplies two or more different non adjustable resistance values.



RESISTOR, VARIABLE or RHEOSTAT

A controllable resistor with a variable rate of resistance.
Also called a potentiometer or rheostat.

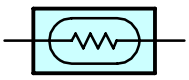

SENSOR (Thermistor)

A resistor which varies its resistance with temperature.

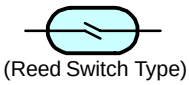

(Reed Switch Type)

SENSOR, SPEED

Uses magnetic impulses to open and close a switch to create a signal for activation of other components.

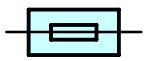

SHORT PIN

Used to provide an unbroken connection within a junction block.

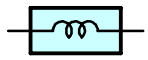

SOLENOID

An electromagnetic coil which forms a magnetic field when current flows, to move a plunger, etc.

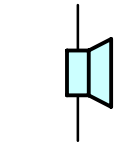

SPEAKER

An electromechanical device which creates sound waves from current flow.

SWITCH, MANUAL

Opens and closes circuits, thereby stopping (1) or allowing (2) current flow.

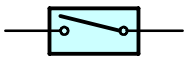

1. NORMALLY OPEN

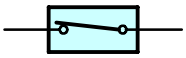

2. NORMALLY CLOSED

SWITCH, DOUBLE THROW

A switch which continuously passes current through one set of contacts or the other.

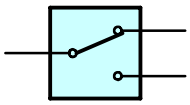

SWITCH, IGNITION

A key operated switch with several positions which allows various circuits, particularly the primary ignition circuit, to become operational.

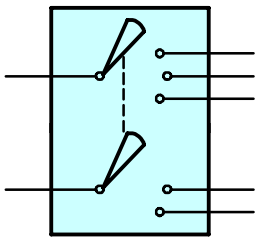

SWITCH, WIPER PARK

Automatically returns wipers to the stop position when the wiper switch is turned off.

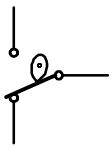

TRANSISTOR

A solidstate device typically used as an electronic relay; stops or passes current depending on the voltage applied at ”base”.

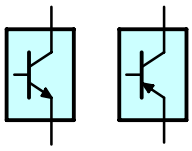

WIRES

Wires are always drawn as straight lines on wiring diagrams.
Crossed wires (1) without a black dot at the junction are not joined;
crossed wires (2) with a black dot or octagonal ( ) mark at the junction are spliced (joined) connections.

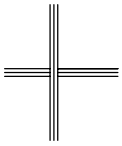

(1) NOT CONNECTED

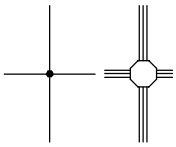

(2) SPLICED

I GROUND POINT

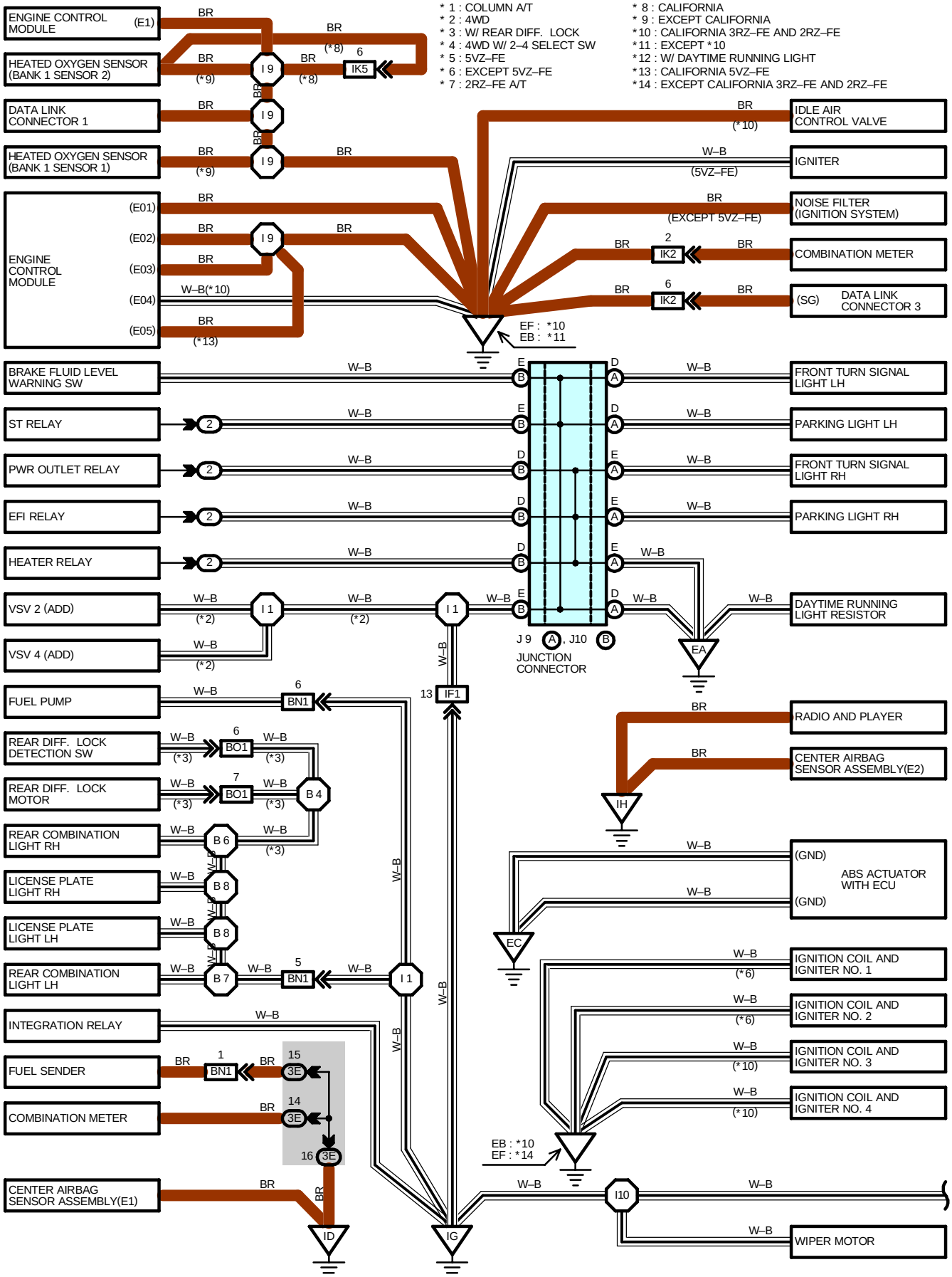

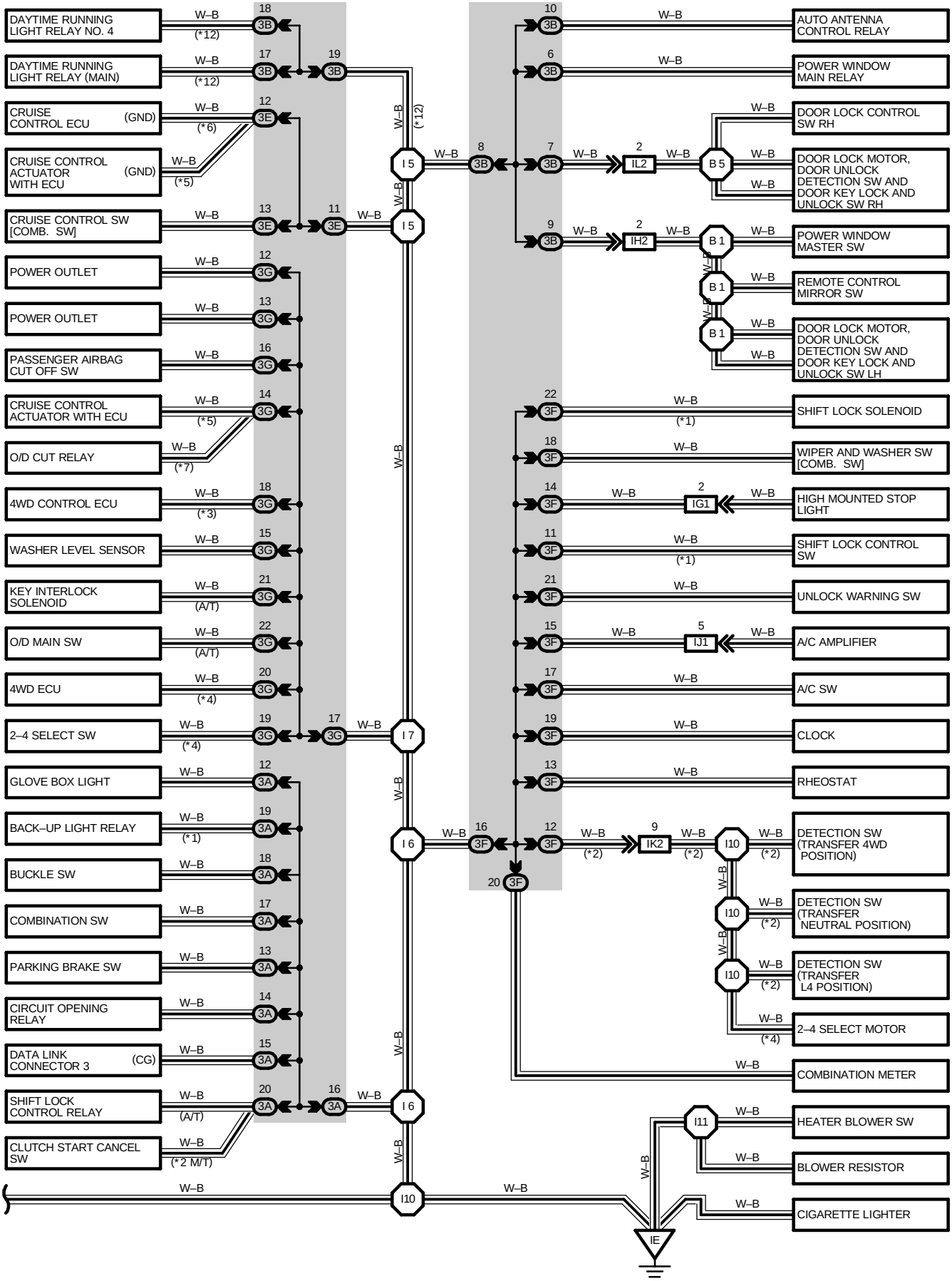
DAYTIME RUNNING LIGHT RELAY NO. 4
DAYTIME RUNNING LIGHT RELAY (MAIN)
CRUISE CONTROL ECU (GND)
CRUISE CONTROL ACTUATOR WITH ECU (GND)
CRUISE CONTROL SW [COMB. SW]
POWER OUTLET
POWER OUTLET
PASSENGER AIRBAG CUT OFF SW
CRUISE CONTROL ACTUATOR WITH ECU
O/D CUT RELAY
4WD CONTROL ECU
WASHER LEVEL SENSOR
KEY INTERLOCK SOLENOID
O/D MAIN SW
4WD ECU
2–4 SELECT SW
GLOVE BOX LIGHT
BACK–UP LIGHT RELAY
BUCKLE SW
COMBINATION SW
PARKING BRAKE SW
CIRCUIT OPENING RELAY
DATA LINK CONNECTOR 3 (CG)
SHIFT LOCK CONTROL RELAY
CLUTCH START CANCEL SW
AUTO ANTENNA CONTROL RELAY
POWER WINDOW MAIN RELAY
DOOR LOCK CONTROL SW RH
DOOR LOCK MOTOR, DOOR UNLOCK DETECTION SW AND DOOR KEY LOCK AND UNLOCK SW RH
POWER WINDOW MASTER SW
REMOTE CONTROL MIRROR SW
DOOR LOCK MOTOR, DOOR UNLOCK DETECTION SW AND DOOR KEY LOCK AND UNLOCK SW LH
SHIFT LOCK SOLENOID
WIPER AND WASHER SW [COMB. SW]
HIGH MOUNTED STOP LIGHT
SHIFT LOCK CONTROL SW
UNLOCK WARNING SW
A/C AMPLIFIER
A/C SW
CLOCK
RHEOSTAT
DETECTION SW (TRANSFER 4WD POSITION)
DETECTION SW (TRANSFER NEUTRAL POSITION)
DETECTION SW (TRANSFER L4 POSITION)
2–4 SELECT MOTOR
COMBINATION METER
HEATER BLOWER SW
BLOWER RESISTOR
CIGARETTE LIGHTER
W–B
(*1)
(*2)
(*3)
(*4)
(*5)
(*6)
(*7)
(*12)
(A/T)
(2 M/T)

I GROUND POINT

: PARTS LOCATION

Code	See Page	Code	See Page	Code	See Page
J9	29 (5VZ–FE)	J10	29 (5VZ–FE)		
	31 (3RZ–FE, 2RZ–FE)		31 (3RZ–FE, 2RZ–FE)		

: RELAY BLOCKS

Code	See Page	Relay Blocks (Relay Block Location)
2	21	R/B No.2 (Engine Compartment Left)

: JUNCTION BLOCK AND WIRE HARNESS CONNECTOR

Code	See Page	Junction Block and Wire Harness (Connector Location)
3A	24	Cowl Wire and J/B No.3 (Bihind the Instrument Panel Left)
3B		
3E		
3F		
3G	26	Cowl Wire and J/B No.3 (Bihind the Instrument Panel Center)

: CONNECTOR JOINING WIRE HARNESS AND WIRE HARNESS

Code	See Page	Joining Wire Harness and Wire Harness (Connector Location)
IF1	40	Engine Room Main Wire and Cowl Wire (Left Kick Panel)
IG1	40	Cowl Wire and Roof Wire (Left Kick Panel)
IH2	40	Front Door LH Wire and Cowl Wire (Left Kick Panel)
IJ1	40	Cowl Wire and A/C Sub Wire (Bihind the Glove Box)
IK2	40	Engine Wire and Cowl Wire (Right Kick Panel)
IK5		
IL2	40	Front Door RH Wire and Cowl Wire (Right Kick Panel)
BN1	42	Frame Wire and Cowl Wire (Under the Driver's Seat)
BO1	42	Frame Wire and Diff. Lock Wire (Rear Side Member LH)

: GROUND POINTS

Code	See Page	Ground Points Location
EA	36 (5VZ–FE)	Front Left Fender
	38 (3RZ–FE, 2RZ–FE)	
EB	36 (5VZ–FE)	Near the Throttle Body
	38 (3RZ–FE, 2RZ–FE)	Under the Data Link Connector 1
EC	36 (5VZ–FE)	Front Right Fender
	38 (3RZ–FE, 2RZ–FE)	
EF	38 (3RZ–FE)	Ignition Coil Braket
ID	40	Left Kick Panel
IE	40	Around the Right Edge of the Reinforcement
IG	40	Around the Left Edge of the Reinforcement
IH	40	Right Kick Panel

: SPLICE POINTS

Code	See Page	Wire Harness with Splice Points	Code	See Page	Wire Harness with Splice Points
I1	40	Cowl Wire	B1	42	Front Door LH Wire
I5			B4	42	Frame Wire
I6			B5	42	Front Door RH Wire
I7			B6	42	Frame Wire
I9			B7		
I10	40	Engine Wire	B8		
I11	40	Cowl Wire			

HEADLIGHT (w/ DAYTIME RUNNING LIGHT)

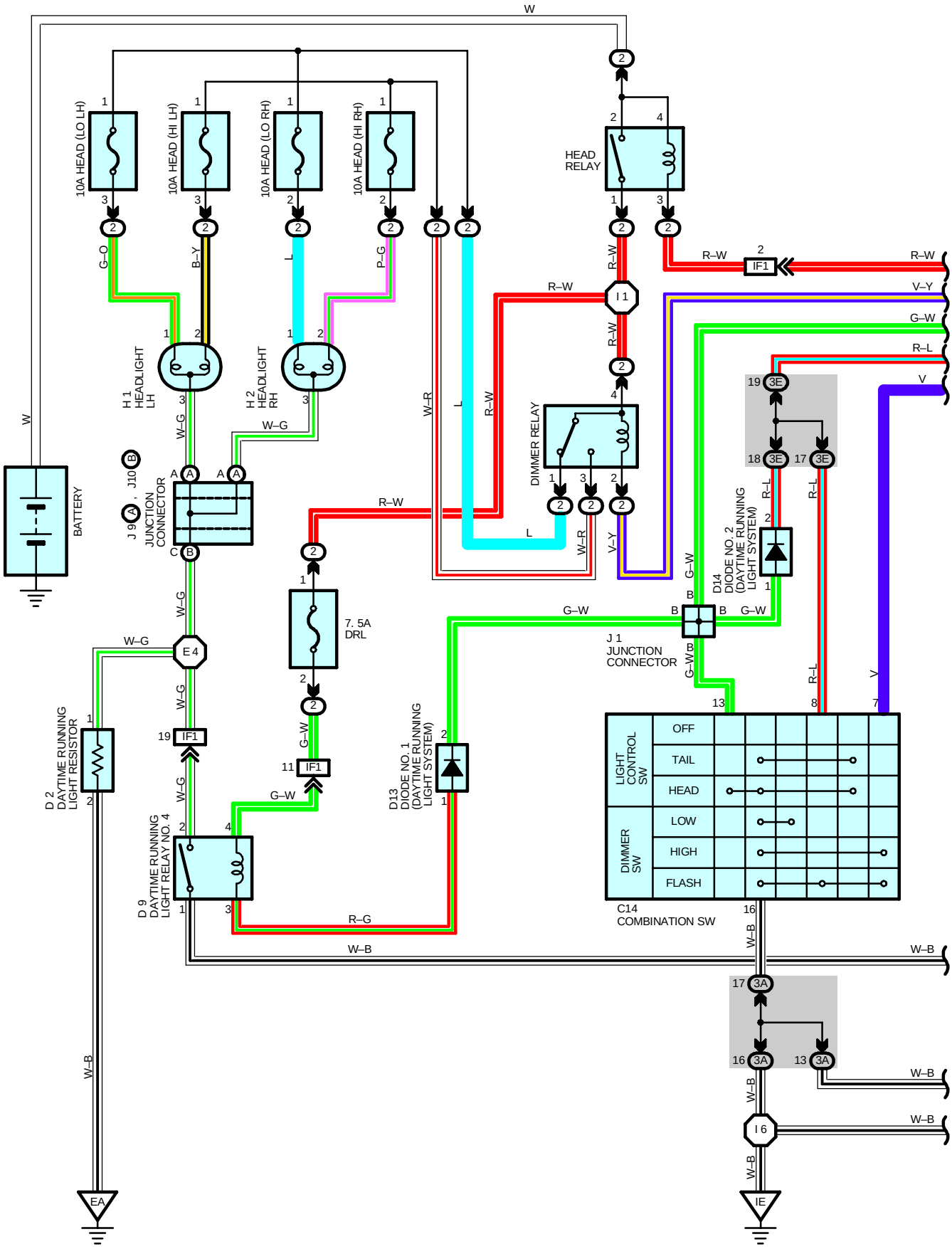

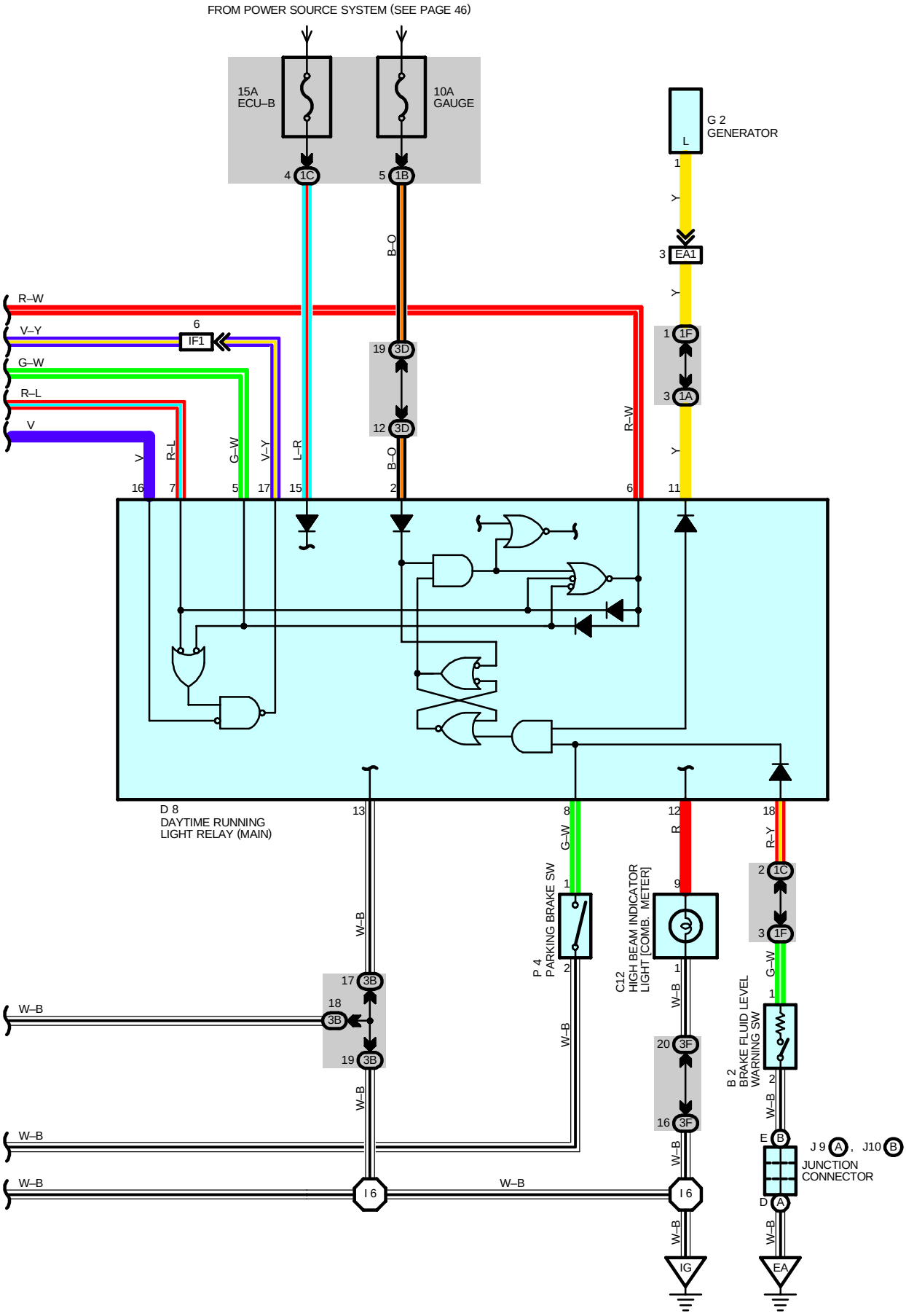
FROM POWER SOURCE SYSTEM (SEE PAGE 46)
15A
ECU–B
10A
GAUGE
4 1C
5 1B
G 2
GENERATOR
L
1
Y
3 EA1
B–O
R–W
V–Y
G–W
R–L
V
6
IF1
19 3D
12 3D
B–O
R–W
1 1F
3 1A
Y
V
R–L
G–W
V–Y
L–R
16
7
5
17
15
2
6
11
D 8
DAYTIME RUNNING
LIGHT RELAY (MAIN)
13
W–B
17 3B
18 3B
19 3B
W–B
W–B
W–B
W–B
W–B
I 6
I 6
8
G–W
1
2
P 4
PARKING BRAKE SW
W–B
12
R
9
C12
HIGH BEAM INDICATOR
LIGHT [COMB. METER]
1
W–B
20 3F
16 3F
W–B
18
R–Y
2 1C
3 1F
G–W
1
B 2
BRAKE FLUID LEVEL
WARNING SW
2
W–B
E B
J 9 A , J10 B
JUNCTION
CONNECTOR
D A
W–B
IG
EA

HEADLIGHT (w/ DAYTIME RUNNING LIGHT)

SYSTEM OUTLINE

1. DAYTIME RUNNING LIGHT OPERATION

When the engine is started, voltage generated at TERMINAL L of the generator is applied to TERMINAL 11 of the daytime running light relay (Main).

If the parking brake lever is pulled up (The parking brake SW on) at this time, the relay is not activated, so the daytime running light system does not operate. If the parking brake lever is then released (The parking brake SW off), a signal is input to TERMINAL 8 of the relay. This activates the relay, so current flows from battery to the HEAD relay (Point side) to TERMINAL 4 of the DIMMER relay to TERMINAL 1 to HEAD (LO LH), (LO RH) fuse to TERMINAL 1 of the headlights to TERMINAL 3 to TERMINAL 1 of the daytime running light resistor to TERMINAL 2 to GROUND. This causes headlights to light up (Headlights light up dimmer than full brightness.).

Once the daytime running light system operates and headlights light up, headlights remain on even if the parking brake lever is pulled up (The parking brake SW on).

If the engine stalls and the ignition SW remains on, headlights remain lighted up even through current is no longer output from TERMINAL L of the generator. If the ignition SW is then turned off, the headlights go off. If the engine is started with the parking brake lever released (The parking brake SW off), the daytime running light system operates and headlights light up when the engine starts.

2. HEADLIGHT OPERATION

When the light control SW is switched to HEAD position, current flows from the DRL fuse to TERMINAL 4 of the daytime running light relay No.4 to TERMINAL 3 to TERMINAL 1 of the diode No.1 to TERMINAL 2 to TERMINAL 13 of the light control SW to TERMINAL 16 to GROUND, activating the daytime running light relay No.4. Current then flows from the HEAD (LO LH), (LO RH) fuse to TERMINAL 1 of the headlights to TERMINAL 3 to TERMINAL 2 of the daytime running light relay No.4 to TERMINAL 1 to GROUND, causing headlights to light up at normal intensity.

When the dimmer SW is switched to HIGH position, the signal from the dimmer SW is input to the daytime running light relay (Main). This activates the relay and current flows from TERMINAL 4 of the DIMMER relay to TERMINAL 2 to TERMINAL 17 of the daytime running light relay (Main), activating the DIMMER relay.

This causes current to flow from TERMINAL 4 of the DIMMER relay to TERMINAL 3 to HEAD (HI LH), (HI RH) fuse to TERMINAL 2 of the headlights to TERMINAL 3 to TERMINAL 2 of the daytime running light relay No.4 to TERMINAL 1 to GROUND, causing headlights to light up at high beam.

When the dimmer SW is switched to FLASH position, the daytime running light relay (Main) is activated and current flows from TERMINAL 4 of the DIMMER relay to TERMINAL 2. Current from the DRL fuse flows TERMINAL 4 of the daytime running light relay No.4 to TERMINAL 3 to TERMINAL 1 of the diode No.1 to TERMINAL 2 to TERMINAL 1 of the diode No.2 to TERMINAL 2 to TERMINAL 8 of the dimmer SW to TERMINAL 16 to GROUND, and also flows from the HEAD (HI LH), (HI RH) fuse to TERMINAL 2 of the headlights to TERMINAL 3 to TERMINAL 2 of the daytime running light relay No.4 to TERMINAL 1 to GROUND, causing the high beam to operate.

SERVICE HINTS

HEAD RELAY [R/B NO.2]

2–1 : Closed with light control SW at **HEAD** position or dimmer SW at **FLASH** position
Closed with engine running and parking brake lever released

DIMMER RELAY [R/B NO.2]

4–3 : Closed with HEAD relay on and dimmer SW at **HIGH** or **FLASH** position

: PARTS LOCATION

Code	See Page	Code	See Page	Code		See Page
B2	28 (5VZ–FE)	D13	32	J1		33
	30 (3RZ–FE, 2RZ–FE)	D14	32	J9	A	29 (5VZ–FE)
C12	32	G2	28 (5VZ–FE)			31 (3RZ–FE, 2RZ–FE)
C14	32		30 (3RZ–FE, 2RZ–FE)	J10	B	29 (5VZ–FE)
D2	28 (5VZ–FE)	H1	28 (5VZ–FE)			31 (3RZ–FE, 2RZ–FE)
	30 (3RZ–FE, 2RZ–FE)		30 (3RZ–FE, 2RZ–FE)	P4		33
D8	32	H2	28 (5VZ–FE)			
D9	32		30 (3RZ–FE, 2RZ–FE)			

: RELAY BLOCKS

Code	See Page	Relay Blocks (Relay Block Location)
2	21	R/B No.2 (Engine Compartment Left)

: JUNCTION BLOCK AND WIRE HARNESS CONNECTOR

Code	See Page	Junction Block and Wire Harness (Connector Location)
1A	22	Cowl Wire and J/B No.1 (Lower Finish Panel)
1B		
1C		
1F	22	Engine Room Main Wire and J/B No.1 (Lower Finish Panel)
3A	24	Cowl Wire and J/B No.3 (Bihind the Instrument Panel Left)
3B		
3D		
3E		
3F		

: CONNECTOR JOINING WIRE HARNESS AND WIRE HARNESS

Code	See Page	Joining Wire Harness and Wire Harness (Connector Location)
EA1	36 (5VZ–FE)	Engine Room Main Wire and Engine No.2 Wire (Near the Battery)
	38 (3RZ–FE, 2RZ–FE)	
IF1	40	Engine Room Main Wire and Cowl Wire (Left Kick Panel)

: GROUND POINTS

Code	See Page	Ground Points Location
EA	36 (5VZ–FE)	Front Left Fender
	38 (3RZ–FE, 2RZ–FE)	
IE	40	Around the Right Edge of the Reinforcement
IG	40	Around the Left Edge of the Reinforcement

: SPLICE POINTS

Code	See Page	Wire Harness with Splice Points	Code	See Page	Wire Harness with Splice Points
E4	36 (5VZ–FE)	Engine Room Main Wire	I1	40	Cowl Wire
	38 (3RZ–FE, 2RZ–FE)		I6		

HEADLIGHT (w/o DAYTIME RUNNING LIGHT)

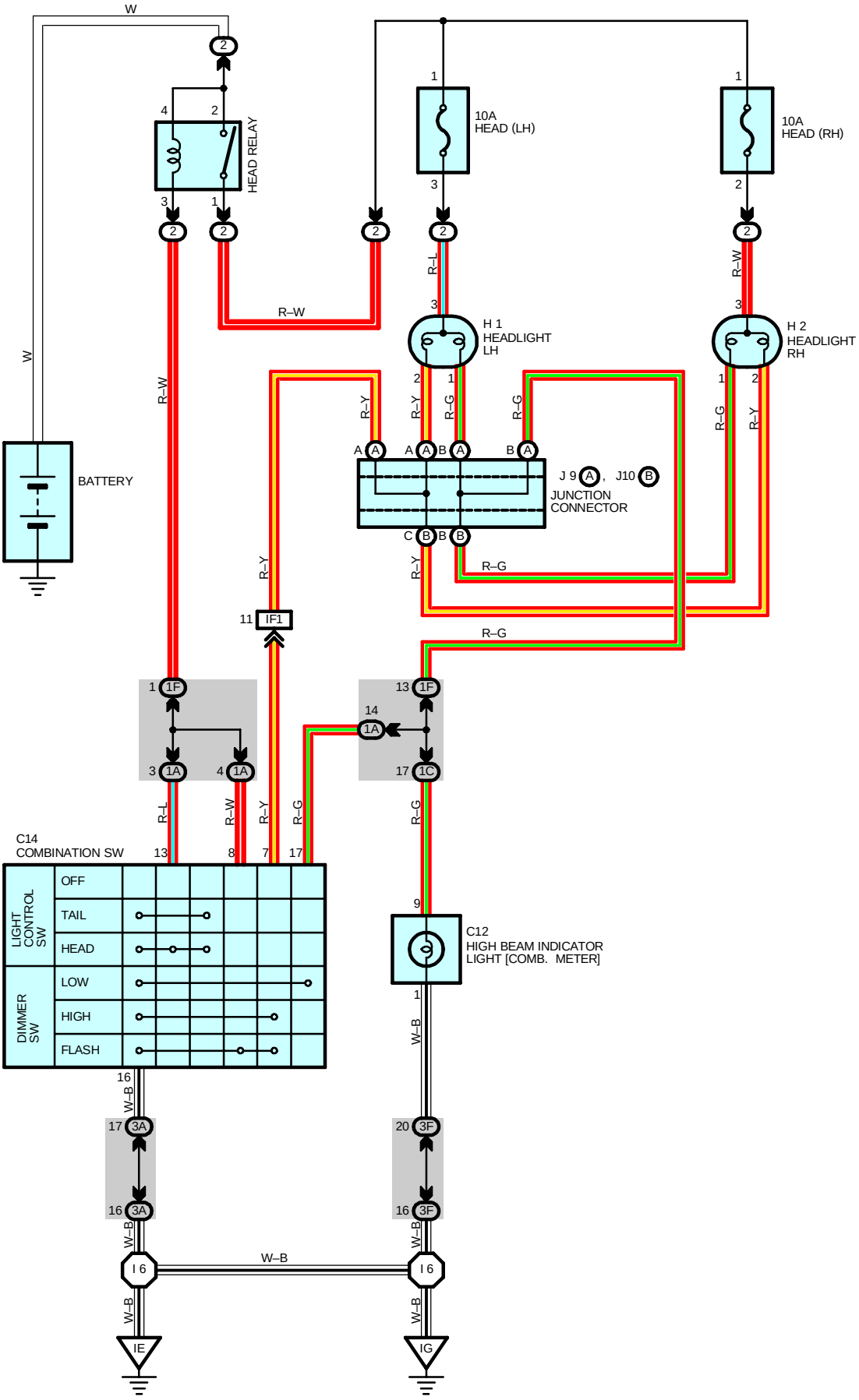

SERVICE HINTS

HEAD RELAY [R/B NO.2]

2–1 : Closed with light control SW at **HEAD** position or dimmer SW at **FLASH** position

: PARTS LOCATION

Code	See Page	Code		See Page	Code		See Page
C12	32	H2		28 (5VZ–FE)	J10	B	29 (5VZ–FE)
C14	32			30 (3RZ–FE, 2RZ–FE)			31 (3RZ–FE, 2RZ–FE)
H1	28 (5VZ–FE)	J9	A	29 (5VZ–FE)			
	30 (3RZ–FE, 2RZ–FE)			31 (3RZ–FE, 2RZ–FE)			

: RELAY BLOCKS

Code	See Page	Relay Blocks (Relay Block Location)
2	21	R/B No.2 (Engine Compartment Left)

: JUNCTION BLOCK AND WIRE HARNESS CONNECTOR

Code	See Page	Junction Block and Wire Harness (Connector Location)
1A	22	Cowl Wire and J/B No.1 (Lower Finish Panel)
1C		
1F	22	Engine Room Main Wire and J/B No.1 (Lower Finish Panel)
3A	24	Cowl Wire and J/B No.3 (Bihind the Instrument Panel Left)
3F		

: CONNECTOR JOINING WIRE HARNESS AND WIRE HARNESS

Code	See Page	Joining Wire Harness and Wire Harness (Connector Location)
IF1	40	Engine Room Main Wire and Cowl Wire (Left Kick Panel)

: GROUND POINTS

Code	See Page	Ground Points Location
IE	40	Around the Right Edge of the Reinforcement
IG	40	Around the Left Edge of the Reinforcement

: SPLICE POINTS

Code	See Page	Wire Harness with Splice Points	Code	See Page	Wire Harness with Splice Points
I6	40	Cowl Wire			

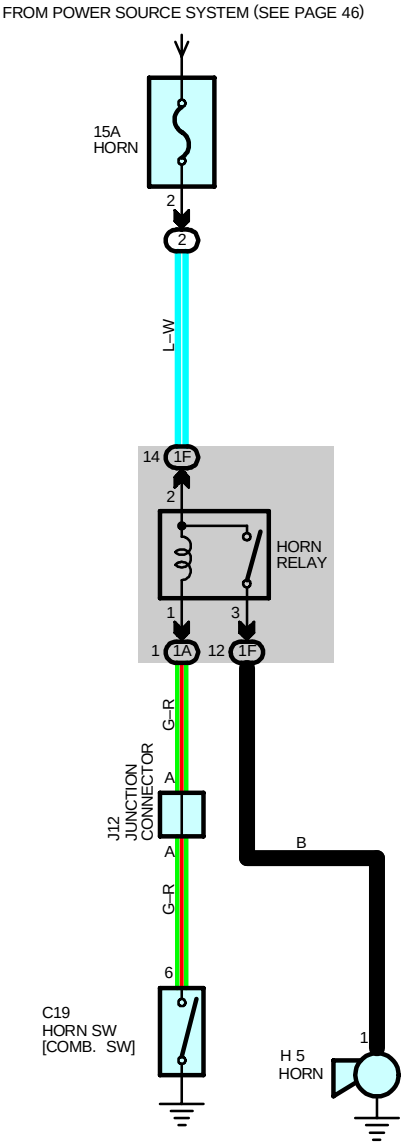
FROM POWER SOURCE SYSTEM (SEE PAGE 46)
15A
HORN
2
2
L–W
14
1F
2
HORN
RELAY
1
3
1
1A
12
1F
G–R
J12
JUNCTION
CONNECTOR
A
A
B
G–R
6
C19
HORN SW
[COMB. SW]
1
H 5
HORN

SERVICE HINTS

HORN RELAY [J/B NO.1]

2–3 : Closed with horn SW on

: PARTS LOCATION

Code	See Page	Code	See Page	Code	See Page
C19	32	H5	30 (3RZ–FE, 2RZ–FE)		
H5	28 (5VZ–FE)	J12	33		

: RELAY BLOCKS

Code	See Page	Relay Blocks (Relay Block Location)
2	21	R/B No.2 (Engine Compartment Left)

: JUNCTION BLOCK AND WIRE HARNESS CONNECTOR

Code	See Page	Junction Block and Wire Harness (Connector Location)
1A	22	Cowl Wire and J/B No.1 (Lower Finish Panel)
1F	22	Engine Room Main Wire and J/B No.1 (Lower Finish Panel)

This manual provides information on the electrical circuits installed on vehicles by dividing them into a circuit for each system.

The actual wiring of each system circuit is shown from the point where the power source is received from the battery as far as each ground point. (All circuit diagrams are shown with the switches in the OFF position.)

When troubleshooting any problem, first understand the operation of the circuit where the problem was detected (see System Circuit section), the power source supplying power to that circuit (see Power Source section), and the ground points (see Ground Point section). See the System Outline to understand the circuit operation.

When the circuit operation is understood, begin troubleshooting of the problem circuit to isolate the cause. Use Relay Location and Electrical Wiring Routing sections to find each part, junction block and wiring harness connectors, wiring harness and wiring harness connectors, splice points, and ground points of each system circuit. Internal wiring for each junction block is also provided for better understanding of connection within a junction block.
Wiring related to each system is indicated in each system circuit by arrows (from__, to__). When overall connections are required, see the Overall Electrical Wiring Diagram at the end of this manual.

[A]

STOP LIGHT

* The system shown here is an EXAMPLE ONLY. It is different to the actual circuit shown in the SYSTEM CIRCUITS SECTION.

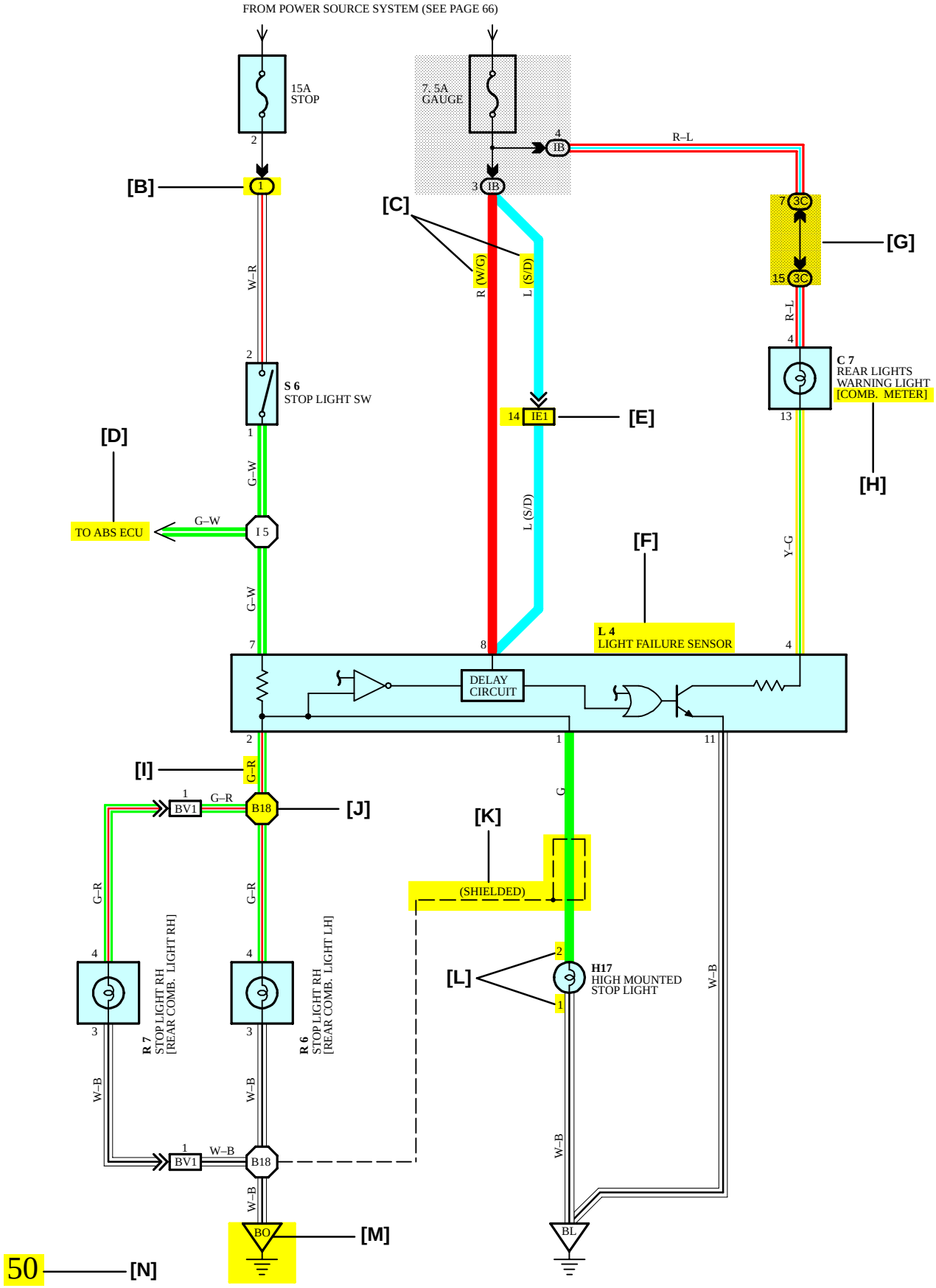

[A] : System Title

[B] : Indicates a Relay Block. No shading is used and only the Relay Block No. is shown to distinguish it from the J/B

Example: (1) Indicates Relay Block No.1

[C] : ( ) is used to indicate different wiring and connector, etc. when the vehicle model, engine type, or specification is different.

[D] : Indicates related system.

[E] : Indicates the wiring harness and wiring harness connector. The wiring harness with male terminal is shown with arrows (»).
Outside numerals are pin numbers.

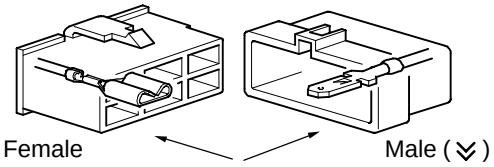

The first letter of the code for each wiring harness and wiring harness connector(s) indicates the component's location, e.g, "E" for the Engine Compartment, "I" for the Instrument Panel and Surrounding area, and "B" for the Body and Surrounding area.

When more than one code has the first and second letters in common, followed by numbers (e.g, IH1, IH2), this indicates the same type of wiring harness and wiring harness connector.

[F] : Represents a part (all parts are shown in sky blue). The code is the same as the code used in parts position.

[G] : Junction Block (The number in the circle is the J/B No. and the connector code is shown beside it). Junction Blocks are shaded to clearly separate them from other parts.

Example:

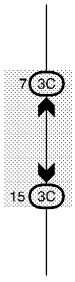

3C indicates that it is inside Junction Block No.3

[H] : When 2 parts both use one connector in common, the parts connector name used in the wire routing section is shown in square brackets [ ].

[I] : Indicates the wiring color.

Wire colors are indicated by an alphabetical code.

B	= Black	W	= White	BR	= Brown
L	= Blue	V	= Violet	SB	= Sky Blue
R	= Red	G	= Green	LG	= Light Green
P	= Pink	Y	= Yellow	GR	= Gray
O	= Orange				

The first letter indicates the basic wire color and the second letter indicates the color of the stripe.

Example: L – Y

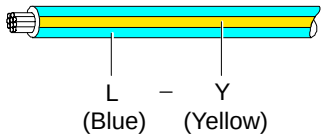

[J] : Indicates a wiring Splice Point (Codes are "E" for the Engine Room, "I" for the Instrument Panel, and "B" for the Body).

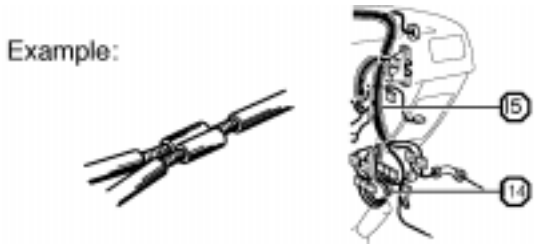

The Location of splice Point I 5 is indicated by the shaded section.

[K] : Indicates a shielded cable.

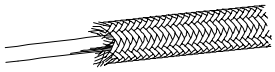

[L] : Indicates the pin number of the connector.
The numbering system is different for female and male connectors.

Example:

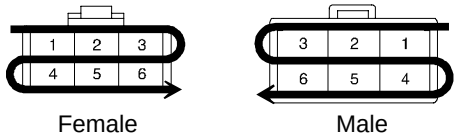

[M] : Indicates a ground point.

The first letter of the code for each ground point(s) indicates the component's location, e.g, "E" for the Engine Compartment, "I" for the Instrument Panel and Surrounding area, and "B" for the Body and Surrounding area.

[N] : Page No.

[O] SYSTEM OUTLINE

Current is applied at all times through the STOP fuse to TERMINAL 2 of the stop light SW.
When the ignition SW is turned on, current flows from the GAUGE fuse to TERMINAL 8 of the light failure sensor, and also flows through the rear lights warning light to TERMINAL 4 of the light failure sensor.

STOP LIGHT DISCONNECTION WARNING

When the ignition SW is turned on and the brake pedal is pressed (Stop light SW on), if the stop light circuit is open, the current flowing from TERMINAL 7 of the light failure sensor to TERMINALS 1, 2 changes, so the light failure sensor detects the disconnection and the warning circuit of the light failure sensor is activated.
As a result, the current flows from TERMINAL 4 of the light failure sensor to TERMINAL 11 to GROUND and turns the rear lights warning light on. By pressing the brake pedal, the current flowing to TERMINAL 8 of the light failure sensor keeps the warning circuit on and holds the warning light on until the ignition SW is turned off.

[P] SERVICE HINTS

S6 STOP LIGHT SW

2–1 : Closed with the brake pedal depressed

L4 LIGHT FAILURE SENSOR

1, 2, 7–GROUND : Approx. **12** volts with the stop light SW on
4, 8–GROUND : Approx. **12** volts with the ignition SW at **ON** position
11–GROUND : Always continuity

[Q] : PARTS LOCATION

Code	See Page	Code	See Page	Code	See Page
C7	34	L4	36	R7	37
H17	36	R6	37	S6	35

[R] : RELAY BLOCKS

Code	See Page	Relay Blocks (Relay Block Location)
1	18	R/B No.1 (Instrument Panel Left)

[S] : JUNCTION BLOCK AND WIRE HARNESS CONNECTOR

Code	See Page	Junction Block and Wire Harness (Connector Location)
IB	20	Instrument Panel Wire and Instrument Panel J/B (Lower Finish Panel)
3C	22	Instrument Panel Wire and J/B No.3 (Instrument Panel Left Side)

[T] : CONNECTOR JOINING WIRE HARNESS AND WIRE HARNESS

Code	See Page	Joining Wire Harness and Wire Harness (Connector Location)
IE1	42	Floor Wire and Instrument Panel Wire (Left Kick Panel)
BV1	50	Luggage Room Wire and Floor Wire (Luggage Compartment Left)

[U] : GROUND POINTS

Code	See Page	Ground Points Location
BL	50	Under the Left Quarter Pillar
BO	50	Back Panel Center

[V] : SPLICE POINTS

Code	See Page	Wire Harness with Splice Points	Code	See Page	Wire Harness with Splice Points
I5	44	Cowl Wire	B18	50	Luggage Room Wire

[O] : Explains the system outline.

[P] : Indicates values or explains the function for reference during troubleshooting.

[Q] : Indicates the reference page showing the position on the vehicle of the parts in the system circuit.

Example : Part ”L4” (Light Failure Sensor) is on page 36 of the manual.
∗ The letter in the code is from the first letter of the part, and the number indicates its order in parts starting with that letter.

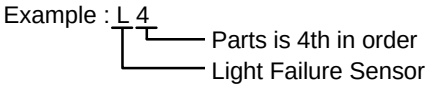

[R] : Indicates the reference page showing the position on the vehicle of Relay Block Connectors in the system circuit.

Example : Connector ”1” is described on page 18 of this manual and is installed on the left side of the instrument panel.

[S] : Indicates the reference page showing the position on the vehicle of J/B and Wire Harness in the system circuit.

Example : Connector ”3C” connects the Instrument Panel Wire and J/B No.3. It is described on page 22 of this manual, and is installed on the instrument panel left side.

[T] : Indicates the reference page describing the wiring harness and wiring harness connector (the female wiring harness is shown first, followed by the male wiring harness).

Example : Connector ”IE1” connects the floor wire (female) and Instrument panel wire (male). It is described on page 42 of this manual, and is installed on the left side kick panel.

[U] : Indicates the reference page showing the position of the ground points on the vehicle.

Example : Ground point ”BO” is described on page 50 of this manual and is installed on the back panel center.

[V] : Indicates the reference page showing the position of the splice points on the vehicle.

Example : Splice point ”I5” is on the Cowl Wire Harness and is described on page 44 of this manual.

B HOW TO USE THIS MANUAL

The ground points circuit diagram shows the connections from all major parts to the respective ground points. When troubleshooting a faulty ground point, checking the system circuits which use a common ground may help you identify the problem ground quickly. The relationship between ground points (EA, IB and IC shown below) can also be checked this way.

I GROUND POINT

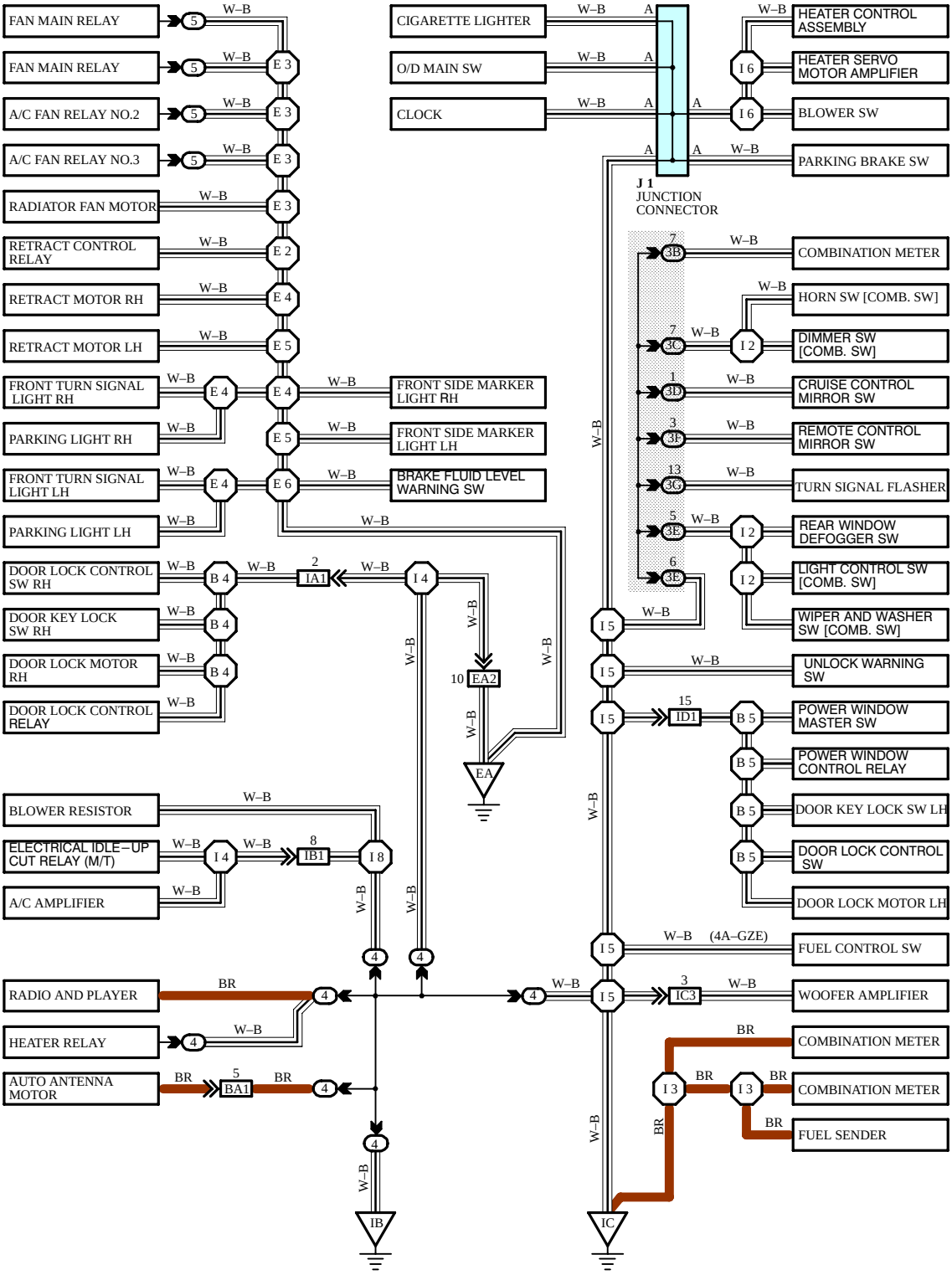

* The system shown here is an EXAMPLE ONLY. It is different to the actual circuit shown in the SYSTEM CIRCUITS SECTION.

The ”Current Flow Chart” section, describes which parts each power source (fuses, fusible links, and circuit breakers) transmits current to. In the Power Source circuit diagram, the conditions when battery power is supplied to each system are explained. Since all System Circuit diagrams start from the power source, the power source system must be fully understood.

J POWER SOURCE (Current Flow Chart)

The chart below shows the route by which current flows from the battery to each electrical source (Fusible Link, Circuit Breaker, Fuse, etc.) and other parts.

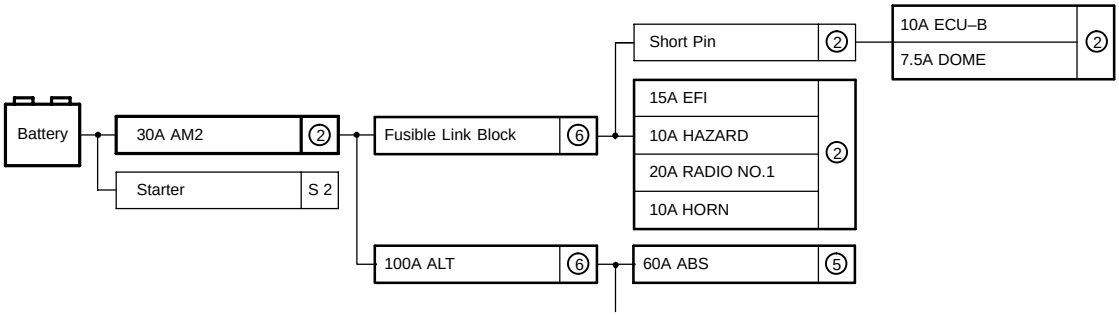

Engine Room R/B (See Page 20)

Fuse		System	Page
20A	STOP	ABS ABS and Traction Control Cruise Control Electronically Controlled Transmission and A/T Indicator Multiplex Communication System	194 187 180 166 210
10A	DOME	Cigarette Lighter and Clock Combination Meter Headlight Interior Light Key Reminder and Seat Belt Warning Light Auto Turn Off ft Deterrent and Door L...	214 230 112 122

POWER SOURCE

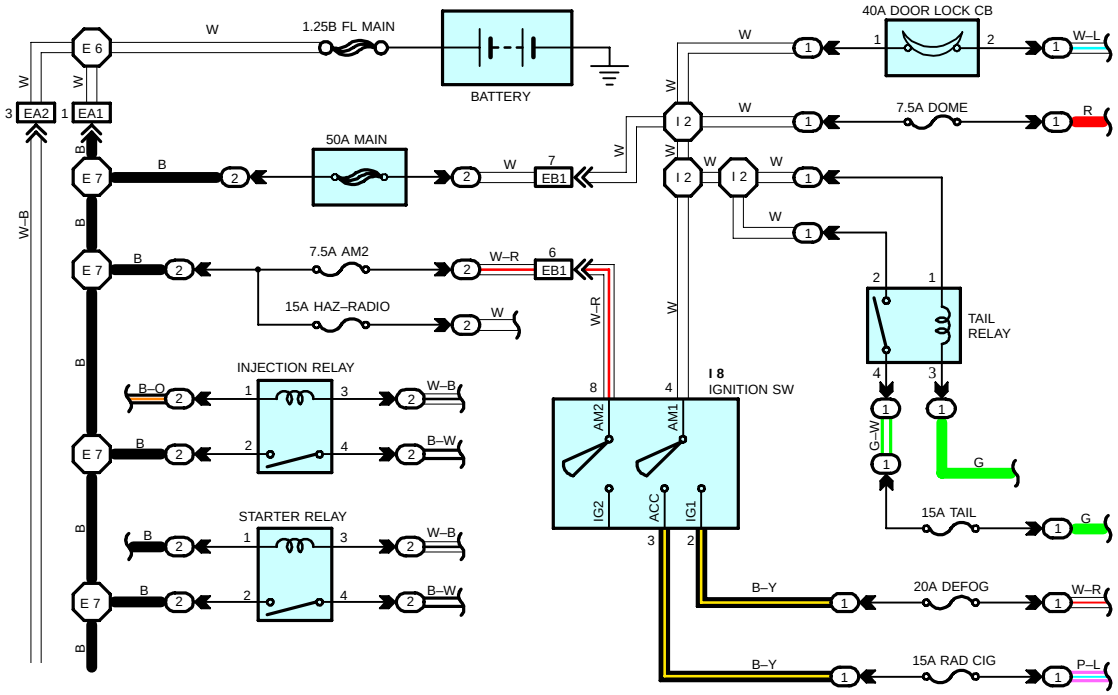

* The system shown here is an EXAMPLE ONLY. It is different to the actual circuit shown in the SYSTEM CIRCUITS SECTION.

K CONNECTOR LIST

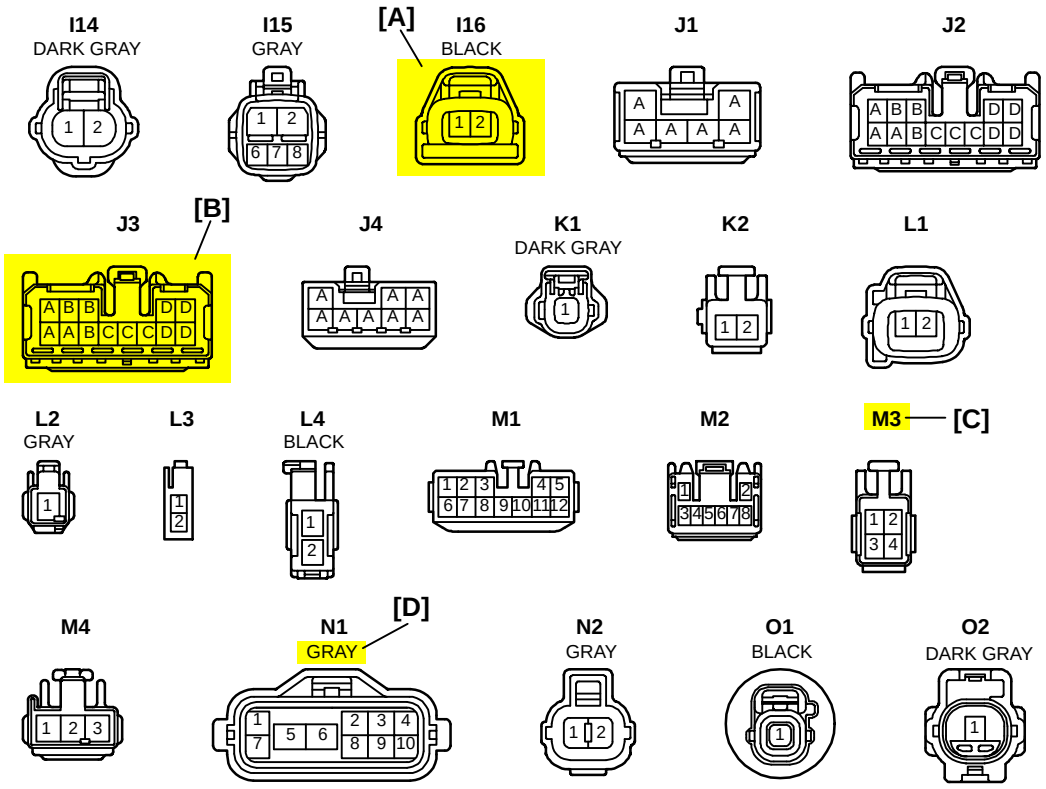

[A] : Indicates connector to be connected to a part. (The numeral indicates the pin No.)

[B] : Junction Connector
Indicates a connector which is connected to a short terminal.

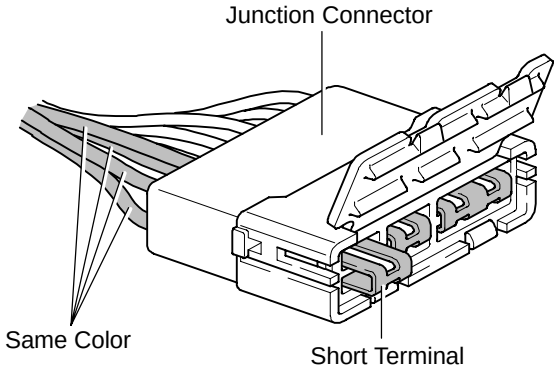

Junction connector in this manual include a short terminal which is connected to a number of wire harnesses. Always perform inspection with the short terminal installed. (When installing the wire harnesses, the harnesses can be connected to any position within the short terminal grouping. Accordingly, in other vehicles, the same position in the short terminal may be connected to a wire harness from a different part.)
Wire harness sharing the same short terminal grouping have the same color.

[C] : Parts Code
The first letter of the code is taken from the first letter of part, and the numbers indicates its order in parts which start with the same letter.

[D] : Connector Color
Connectors not indicated are milky white in color.

L PART NUMBER OF CONNECTORS

Code	Part Name	Part Number
A 1	A/C Ambient Temp. Sensor	90980–11070
A 2	A/C Condenser Fan Motor	90980–11237
A 3	A/C Condenser Fan Relay	90980–10940
A 4	A/C Triple Pressure SW (A/C Dual and Single Pressure SW)	90980–10943
[A]	A/T Oil Temp. Sensor [B]	90980–11413 [C]
A 6	ABS Actuator	90980–11151
A 7	ABS Actuator	90980–11009
A 8	ABS Speed Sensor Front LH	90980–10941
A 9	ABS Speed Sensor Front RH	90980–11002
A10	Airbag Sensor Front LH	90980–11856
A11	Airbag Sensor Front RH	
A12	[illegible]	90980–11194
		90980–11[illegible]

Code	Part Name	Part Number
D 4	Diode (Door Courtesy Light)	90980–11608
D 5	Diode (Key Off Operation)	90980–10962
D 6	Diode (Luggage Compartment Light)	90980–11608
D 7	Door Lock Control Relay	90980–10848
D 8	Door Courtesy Light LH	90980–11148
D 9	Door Courtesy Light RH	
D10	Door Courtesy SW LH	90980–11097
D11	Door Courtesy SW RH	
D12	Door Courtesy SW Front LH	90980–11156
D13	Door Courtesy SW Front RH	
D14	Door Courtesy SW Rear LH	
D15	Door Courtesy SW Rear RH	
D16	[illegible] Unlock SW LH	90980–11170
	[illegible] RH	

[A] : Part Code

[B] : Part Name

[C] : Part Number
Toyota Part Number are indicated.

Not all of the above part numbers of the connector are established for the supply. In case of ordering a connector or terminal with wire, please confirm in advance if there is supply for it using “Parts Catalog News” (published by Parts Engineering Administration Dept.).

INTERIOR LIGHT

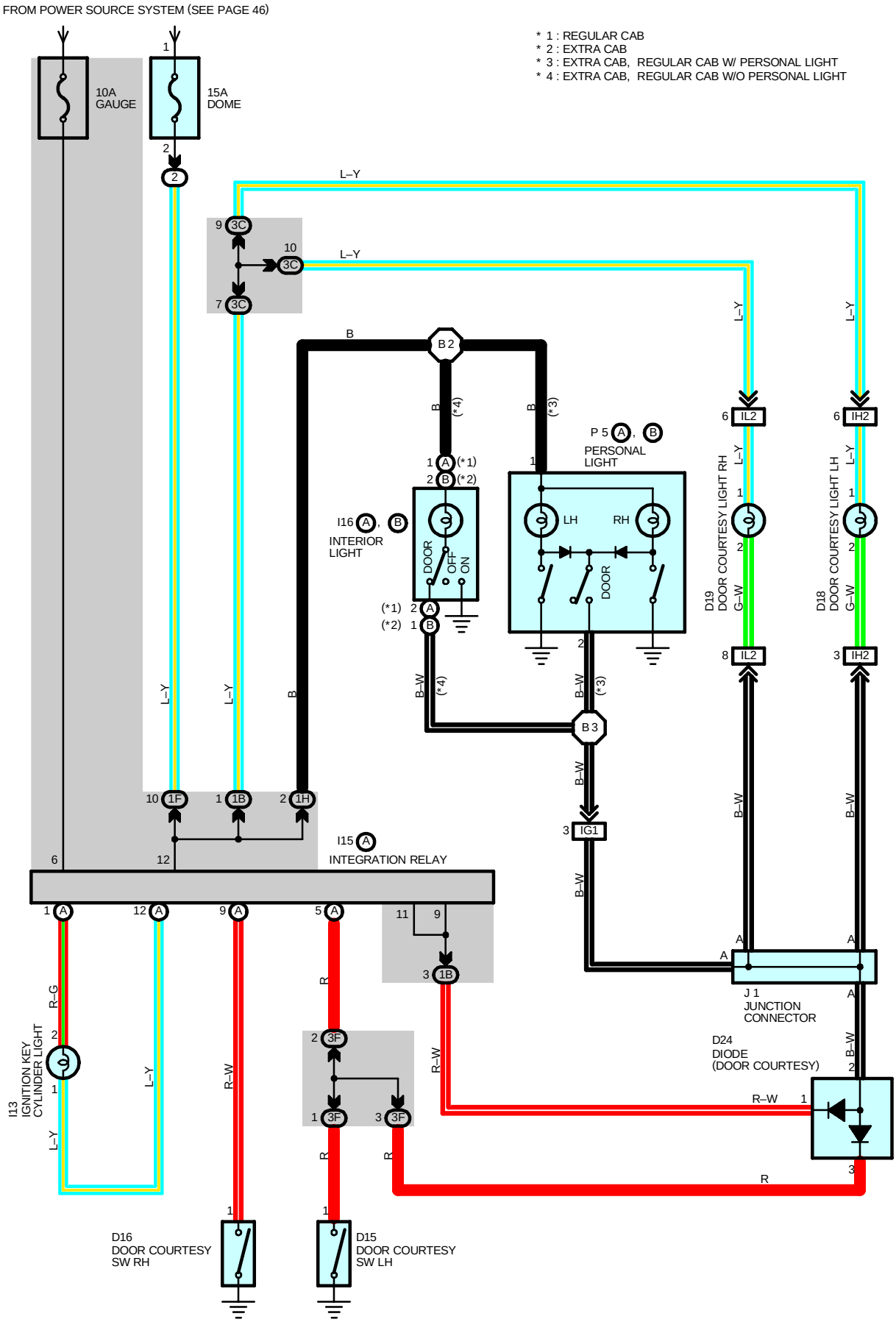

SERVICE HINTS

D15, D16 DOOR COURTESY SW LH, RH

1–GROUND : Closed with door open

: PARTS LOCATION

Code	See Page	Code	See Page	Code	See Page
D15	32	D24	32	I16 B	34
D16	32	I13	33	J1	33
D18	34	I15 A	33	P5 B	34
D19	34	I16 A	34	P5 A	34

: RELAY BLOCKS

Code	See Page	Relay Blocks (Relay Block Location)
2	21	R/B No.2 (Engine Compartment Left)

: JUNCTION BLOCK AND WIRE HARNESS CONNECTOR

Code	See Page	Junction Block and Wire Harness (Connector Location)
1B	22	Cowl Wire and J/B No.1 (Lower Finish Panel)
1F	22	Engine Room Main Wire and J/B No.1 (Lower Finish Panel)
1H	22	Roof Wire and J/B No.1 (Lower Finish Panel)
3C	24	Cowl Wire and J/B No.3 (Bihind the Instrument Panel Left)
3F		

: CONNECTOR JOINING WIRE HARNESS AND WIRE HARNESS

Code	See Page	Joining Wire Harness and Wire Harness (Connector Location)
IG1	40	Cowl Wire and Roof Wire (Left Kick Panel)
IH2	40	Front Door LH Wire and Cowl Wire (Left Kick Panel)
IL2	40	Front Door RH Wire and Cowl Wire (Right Kick Panel)

: SPLICE POINTS

Code	See Page	Wire Harness with Splice Points	Code	See Page	Wire Harness with Splice Points
B2	42	Roof Wire	B3	42	Roof Wire

A INTRODUCTION

This manual consists of the following 13 sections:

No.	Section	Description
A	INDEX	Index of the contents of this manual.
	INTRODUCTION	Brief explanation of each section.
B	HOW TO USE THIS MANUAL	Instructions on how to use this manual.
C	TROUBLE–SHOOTING	Describes the basic inspection procedures for electrical circuits.
D	ABBREVIATIONS	Defines the abbreviations used in this manual.
E	GLOSSARY OF TERMS AND SYMBOLS	Defines the symbols and functions of major parts.
F	RELAY LOCATIONS	Shows position of the Electronic Control Unit, Relays, Relay Block, etc. This section is closely related to the system circuit.
G	ELECTRICAL WIRING ROUTING	Describes position of Parts Connectors, Splice points, Ground points, etc. This section is closely related to the system circuit.
H	INDEX	Index of the system circuits.
	SYSTEM CIRCUITS	Electrical circuits of each system are shown from the power supply through ground points. Wiring connections and their positions are shown and classified by code according to the connection method. (Refer to the section, ”How to use this manual”). The ”System Outline” and ”Service Hints” useful for troubleshooting are also contained in this section.
I	GROUND POINT	Shows ground positions of all parts described in this manual.
J	POWER SOURCE (Current Flow Chart)	Describes power distribution from the power supply to various electrical loads.
K	CONNECTOR LIST	Describes the form of the connectors for the parts appeared in this book. This section is closely related to the system circuit.
L	PART NUMBER OF CONNECTORS	Indicates the part number of the connectors used in this manual.
M	OVERALL ELECTRICAL WIRING DIAGRAM	Provides circuit diagrams showing the circuit connections.

KEY REMINDER AND SEAT BELT WARNING

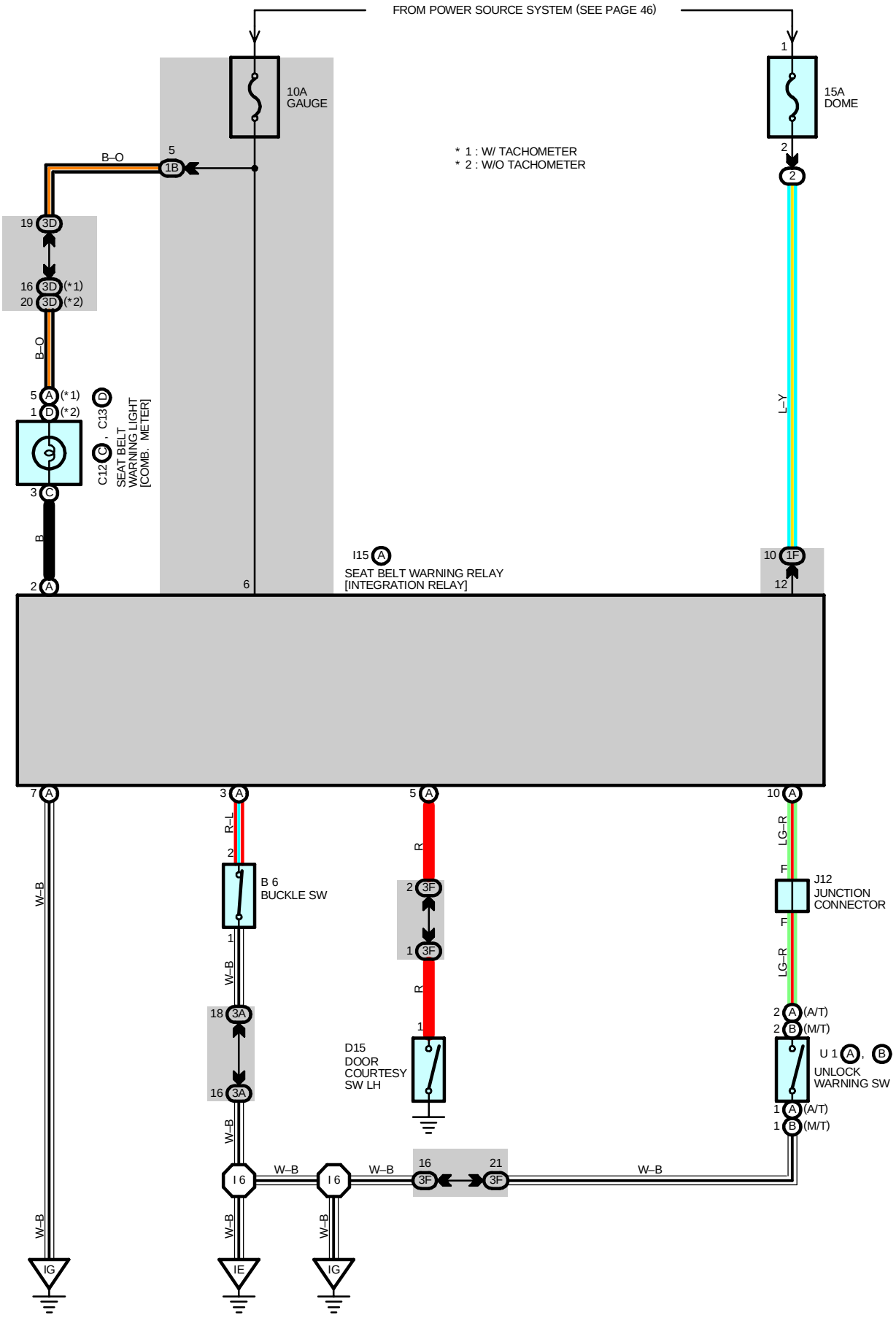

SYSTEM OUTLINE

Current always flows to TERMINAL 12 of the integration relay through the DOME fuse.

1. SEAT BELT WARNING SYSTEM

When the ignition SW is turned on, current flows from the GAUGE fuse to TERMINAL 6 of the integration relay. At the same time, current flows to TERMINAL (A) 2 of the relay from the GAUGE fuse through the seat belt warning light. This current activates the integration relay and, for approx. 4–8 seconds, the current flowing through the warning light flows from TERMINAL (A) 2 of the relay to TERMINAL (A) 7 to GROUND, causing the warning light to light up. At the same time as the warning light lights up, a buckle SW on signal is input to TERMINAL (A) 3 of the integration relay, the current flowing from TERMINAL 12 of the integration relay flows to TERMINAL (A) 7 to GROUND and the seat belt warning buzzer sounds for approx. 4-8 seconds. However, if the seat belt is put on (Buckle SW off) during this period (while the buzzer is sounding), a signal input to TERMINAL (A) 3 of the integration relay stops and the current flowing from TERMINAL 12 of the integration relay to TERMINAL (A) 7 to GROUND is cut, causing the buzzer to stop.

2. KEY REMINDER SYSTEM

With the ignition key inserted in the key cylinder (Unlock warning SW on), the ignition SW still off and front LH door open (Door courtesy SW on), a signal is input to TERMINAL (A) 10, (A) 5 of the integration relay, the integration relay operates and current flows from TERMINAL 6 of the relay to TERMINAL (A) 7 to GROUND and the key reminder buzzer sounds.

SERVICE HINTS

B6 BUCKLE SW

1–2 : Open with driver's seat belt in use

D15 DOOR COURTESY SW LH

1–GROUND : Closed with LH door open

I15 (A) SEAT BELT WARNING RELAY [INTEGRATION RELAY]

6–GROUND : Approx. **12** volts with ignition SW on
12–GROUND : Always approx. **12** volts
(A) 7–GROUND : Always continuity
(A) 5–GROUND : Continuity with LH door open
(A)10–GROUND : Approx. **12** volts with ignition key in cylinder
(A) 2–GROUND : **0** Volts for **4**–**8** seconds with ignition SW on and **12** volts **4**–**8** seconds after ignition SW on

: PARTS LOCATION

Code		See Page	Code		See Page	Code		See Page
B6		34	D15		32	U1	A	33
C12	C	32	I15	A	33		B	33
C13	D	32	J12		33			

: RELAY BLOCKS

Code	See Page	Relay Blocks (Relay Block Location)
2	21	R/B No.2 (Engine Compartment Left)

: JUNCTION BLOCK AND WIRE HARNESS CONNECTOR

Code	See Page	Junction Block and Wire Harness (Connector Location)
1B	22	Cowl Wire and J/B No.1 (Lower Finish Panel)
1F	22	Engine Room Main Wire and J/B No.1 (Lower Finish Panel)
3A	24	Cowl Wire and J/B No.3 (Bihind the Instrument Panel Left)
3D		
3F		

: GROUND POINTS

Code	See Page	Ground Points Location
IE	40	Around the Right Edge of the Reinforcement
IG	40	Around the Left Edge of the Reinforcement

KEY REMINDER AND SEAT BELT WARNING

 **: SPLICE POINTS**

Code	See Page	Wire Harness with Splice Points	Code	See Page	Wire Harness with Splice Points
I6	40	Cowl Wire			

LIGHT REMINDER

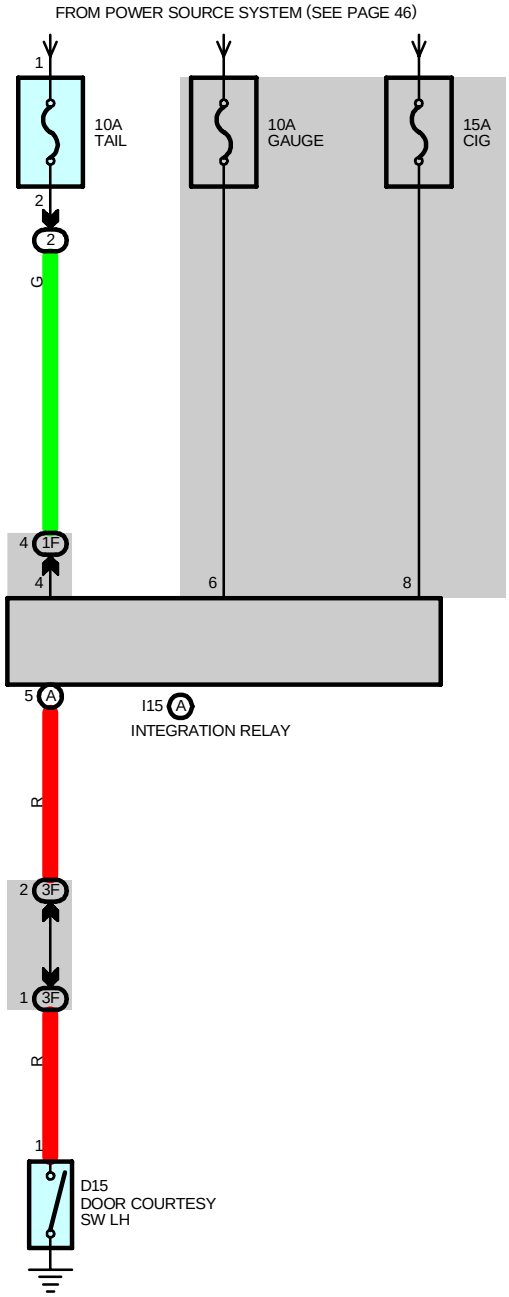

SYSTEM OUTLINE

With the ignition SW in ACC position, current flows to TERMINAL 8 of the integration relay. When the ignition SW is turned to ON position, current flows to TERMINAL 6 of the relay. When the light control SW is turned to TAIL or HEAD position, current is applied to TERMINAL 4 of the relay through the TAIL fuse.

LIGHT REMINDER SYSTEM

When the light control SW is in TAIL or HEAD position and the driver's door is opened (Door courtesy SW on), as a result, the relay is activated and current flows from TERMINAL 4 of the relay to TERMINAL (A) 5 to TERMINAL 1 of the door courtesy SW LH to GROUND, sounding the light reminder buzzer.

SERVICE HINTS

I15 (A) INTEGRATION RELAY

4–GROUND : Approx. **12** volts with light control SW at **TAIL** or **HEAD** position

(A) 5–GROUND : Continuity with LH door open

○ : PARTS LOCATION

Code	See Page	Code		See Page	Code	See Page
D15	32	I15	A	33		

⬭ : RELAY BLOCKS

Code	See Page	Relay Blocks (Relay Block Location)
2	21	R/B No.2 (Engine Compartment Left)

⬭ : JUNCTION BLOCK AND WIRE HARNESS CONNECTOR

Code	See Page	Junction Block and Wire Harness (Connector Location)
1F	22	Engine Room Main Wire and J/B No.1 (Lower Finish Panel)
3F	24	Cowl Wire and J/B No.3 (Bihind the Instrument Panel Left)

1 TOYOTA TACOMA ELECTRICAL WIRING DIAGRAM

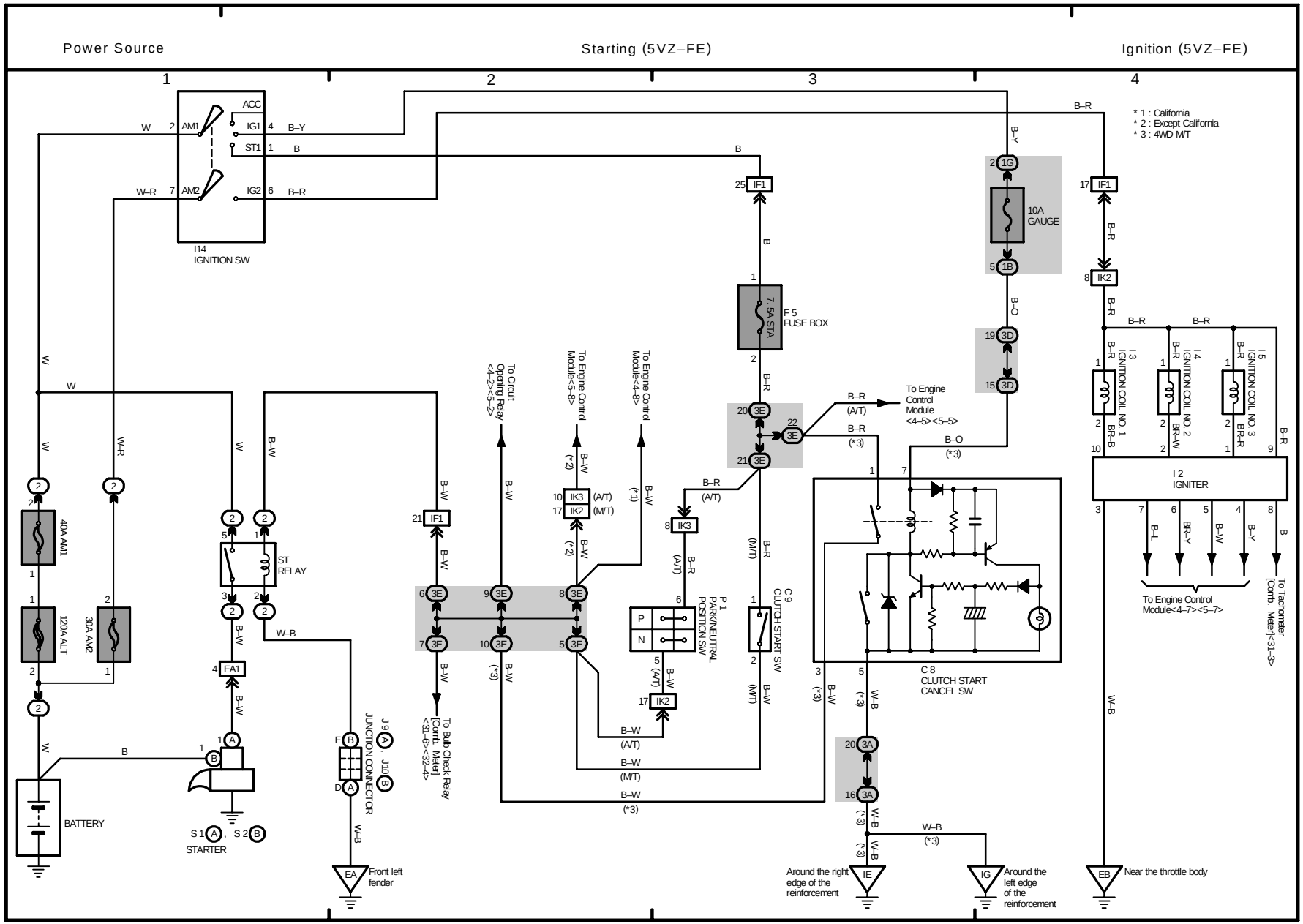

M OVERALL ELECTRICAL WIRING DIAGRAM

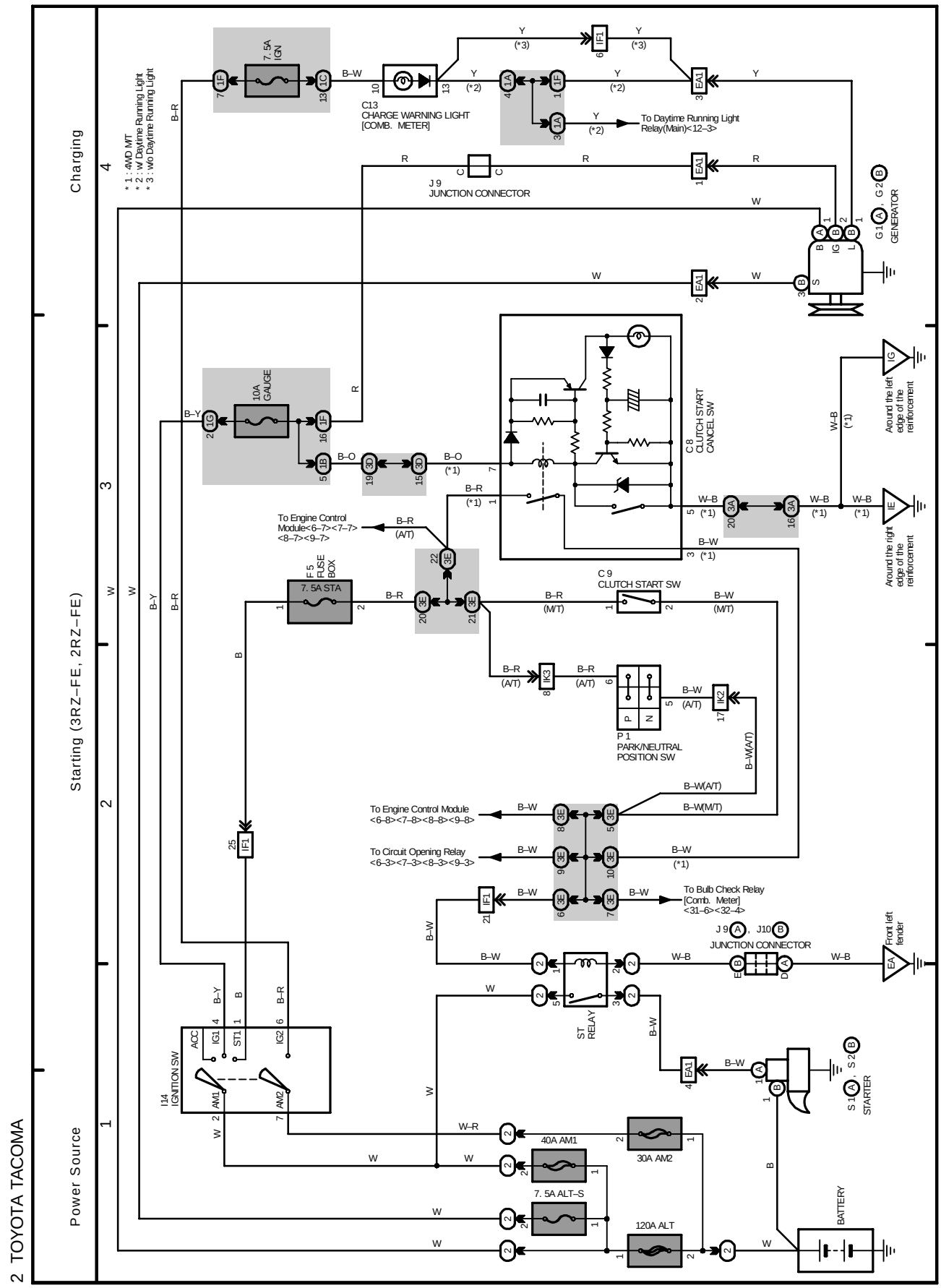

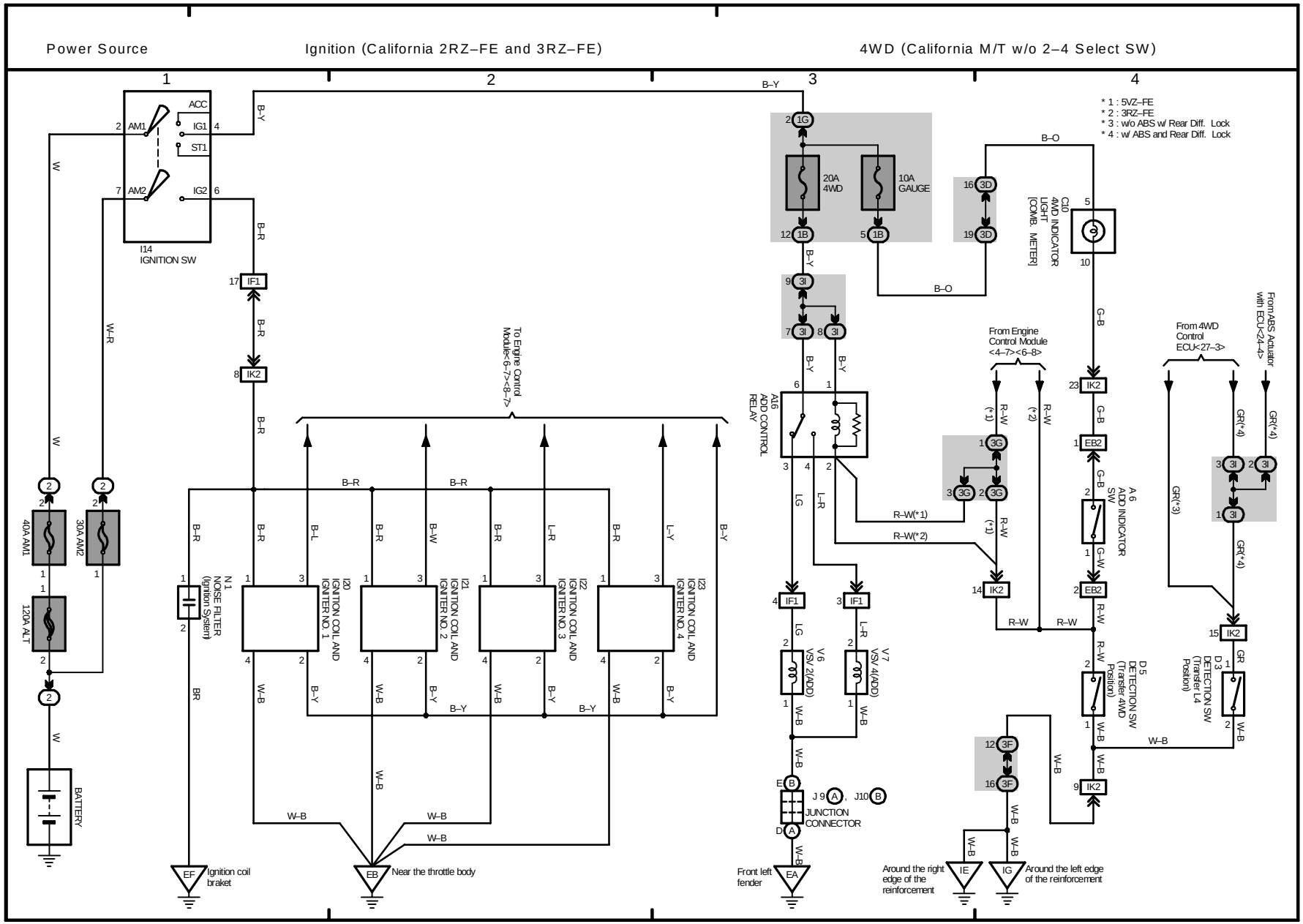
Power Source
Ignition (California 2RZ–FE and 3RZ–FE)
4WD (California M/T w/o 2–4 Select SW)
1
2
3
4
* 1 : 5VZ–FE
* 2 : 3RZ–FE
* 3 : w/o ABS w/ Rear Diff. Lock
* 4 : w/ ABS and Rear Diff. Lock
ACC
AM1
IG1
ST1
AM2
IG2
I14
IGNITION SW
40A AM1
30A AM2
120A ALT
BATTERY
IF1
IK2
To Engine Contrd Module<6–7><8–7>
N1
NOISE FILTER (Ignition System)
I20
IGNITION COIL AND IGNITER NO. 1
I21
IGNITION COIL AND IGNITER NO. 2
I22
IGNITION COIL AND IGNITER NO. 3
I23
IGNITION COIL AND IGNITER NO. 4
EF
Ignition coil braket
EB
Near the throttle body
20A 4WD
10A GAUGE
A16
ADD CONTROL RELAY
V6
VSV 2(ADD)
V7
VSV 4(ADD)
J9
J10
JUNCTION CONNECTOR
Front left fender
From Engine Control Module <4–7><6–8>
C10
4WD INDICATOR LIGHT [COMB METER]
A6
ADD INDICATOR SW
D5
DETECTION SW (Transfer 4WD Position)
D3
DETECTION SW (Transfer L4 Position)
From 4WD Control ECU<27–3>
From ABS Actuator with ECU<24–4>
Around the right edge of the reinforcement
Around the left edge of the reinforcement
IE
IG

M OVERALL ELECTRICAL WIRING DIAGRAM

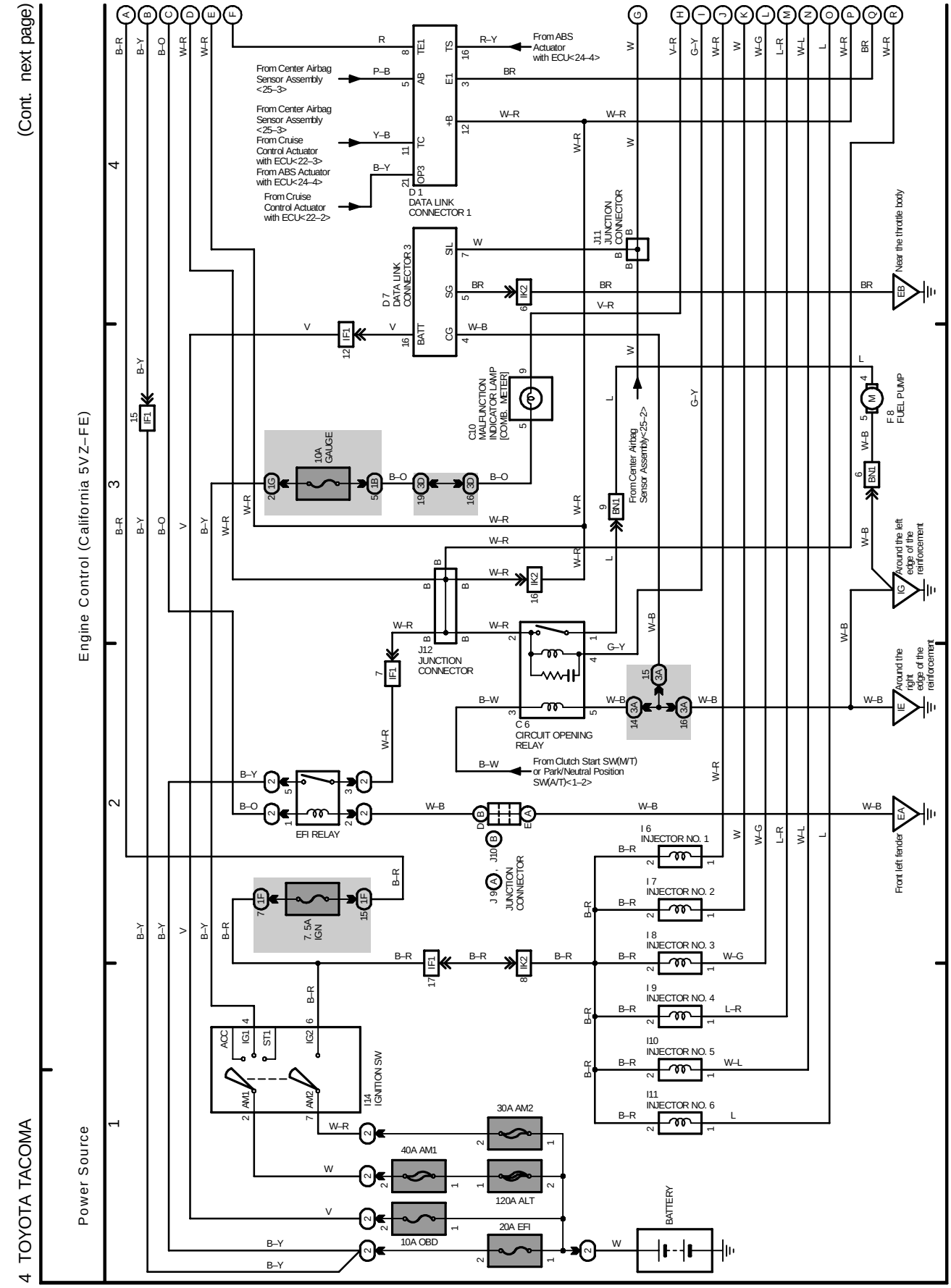

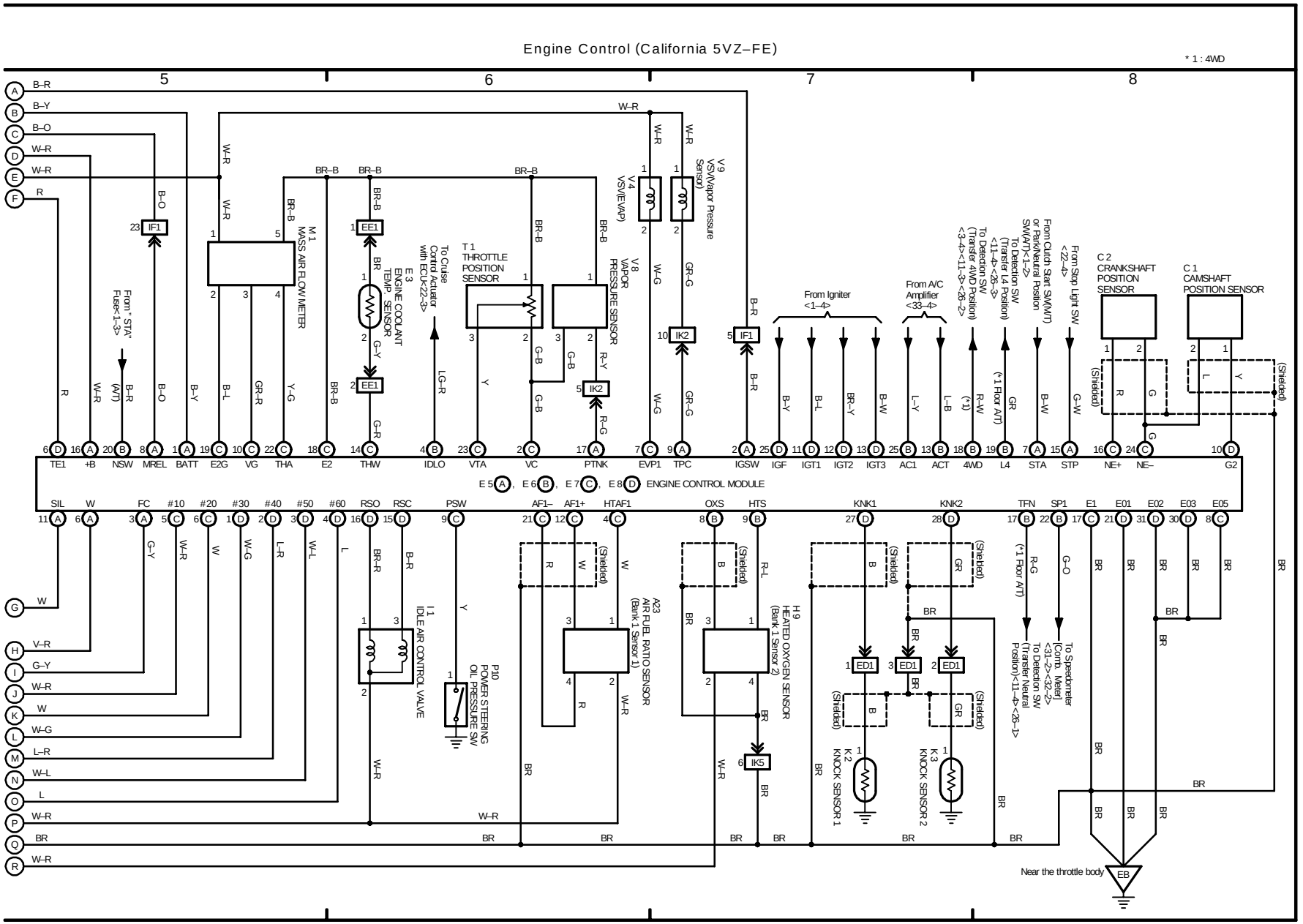
Engine Control (California 5VZ–FE)
* 1 : 4WD
5
6
7
8
E 5 (A), E 6 (B), E 7 (C), E 8 (D) ENGINE CONTROL MODULE
TE1
+B
NSW
MREL
BATT
E2G
VG
THA
E2
THW
IDLO
VTA
VC
PTNK
EVP1
TPC
IGSW
IGF
IGT1
IGT2
IGT3
AC1
ACT
4WD
L4
STA
STP
NE+
NE–
G2
SIL
W
FC
#10
#20
#30
#40
#50
#60
RSO
RSC
PSW
AF1–
AF1+
HTAF1
OXS
HTS
KNK1
KNK2
TFN
SP1
E1
E01
E02
E03
E05
IF1
EE1
IK2
IK5
ED1
M 1 MASS AIR FLOW METER
E 3 ENGINE COOLANT TEMP. SENSOR
T 1 THROTTLE POSITION SENSOR
V 8 VAPOR PRESSURE SENSOR
V 4 VSV(EVAP)
V 9 VSV(Vapor Pressure Sensor)
To Cruise Control Actuator with ECU<22–3>
From " STA" Fuse<1–3>
From Igniter <1–4>
From A/C Amplifier <33–4>
To Detection SW (Transfer 4WD Position) <3–4><11–3><26–2>
To Detection SW (Transfer L4 Position) <11–4><26–3>
From Clutch Start SW(M/T) or Park/Neutral Position SW(A/T)<1–2>
To Detection SW
From Stop Light SW <22–4>
C 2 CRANKSHAFT POSITION SENSOR
C 1 CAMSHAFT POSITION SENSOR
I 1 IDLE AIR CONTROL VALVE
P10 POWER STEERING OIL PRESSURE SW
A23 AIR FUEL RATIO SENSOR (Bank 1 Sensor 1)
H 9 HEATED OXYGEN SENSOR (Bank 1 Sensor 2)
K 2 KNOCK SENSOR 1
K 3 KNOCK SENSOR 2
To Speedometer [Cont. Meter] <31–2><32–2>
To Detection SW (Transfer Neutral Position)<11–4><26–1>
Near the throttle body
EB
(Shielded)

M OVERALL ELECTRICAL WIRING DIAGRAM

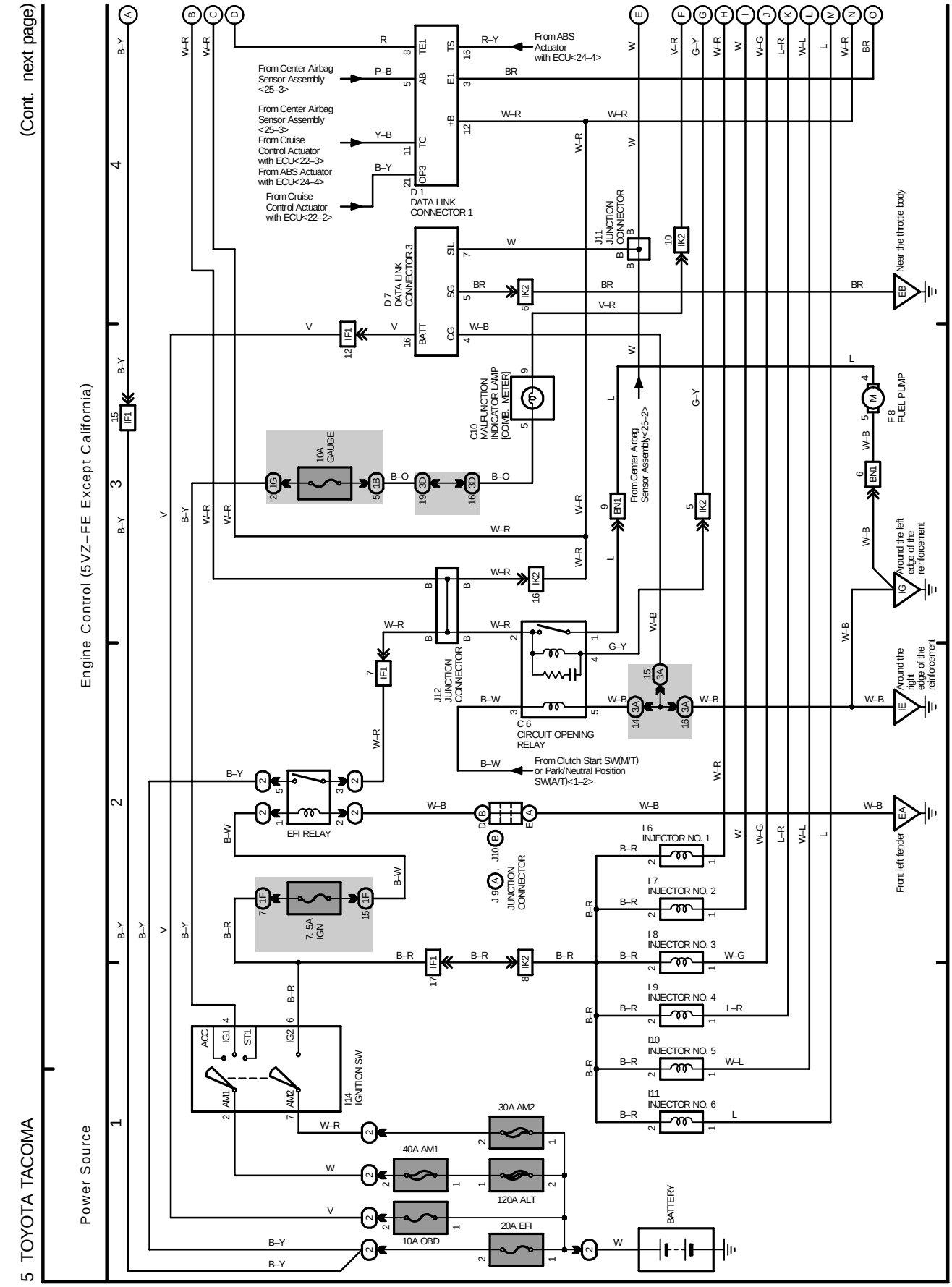

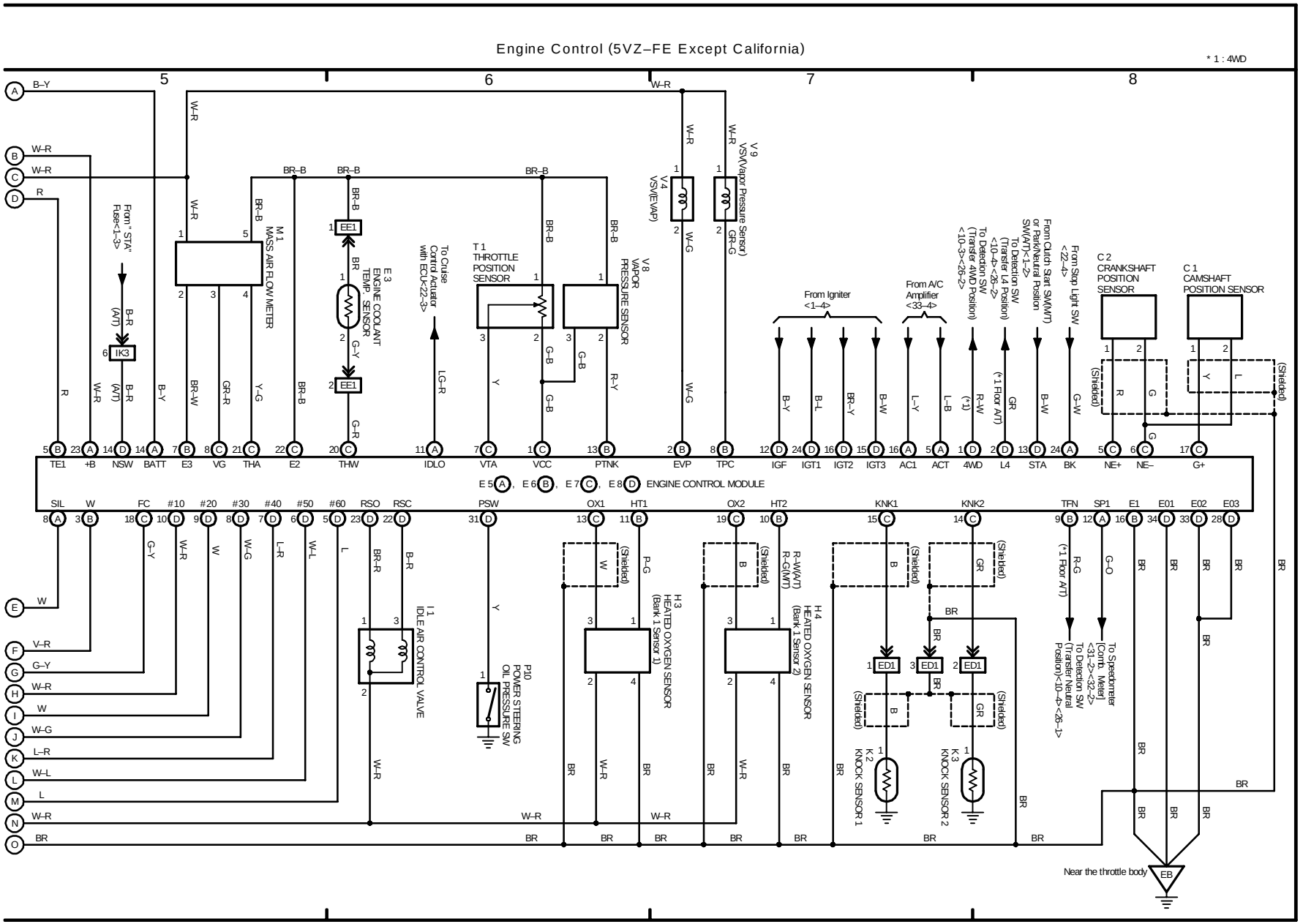
Engine Control (5VZ–FE Except California)
* 1 : 4WD
5
6
7
8
From "STA" Fuse<1–3>
M 1 MASS AIR FLOW METER
E 3 ENGINE COOLANT TEMP. SENSOR
To Cruise Control Actuator with ECU<22–3>
T 1 THROTTLE POSITION SENSOR
V 8 VAPOR PRESSURE SENSOR
V 4 VSV(EVAP)
V 9 VSV(Vapor Pressure Sensor)
From Igniter <1–4>
From A/C Amplifier <33–4>
To Detection SW (Transfer 4WD Position) <10–3><26–2>
To Detection SW (Transfer L4 Position) <10–4><28–2>
From Clutch Start SW(M/T) or Park/Neutral Position SW(A/T)<1–2>
From Stop Light SW <22–4>
C 2 CRANKSHAFT POSITION SENSOR
C 1 CAMSHAFT POSITION SENSOR
TE1 +B NSW BATT E3 VG THA E2 THW IDLO VTA VCC PTNK EVP TPC IGF IGT1 IGT2 IGT3 AC1 ACT 4WD L4 STA BK NE+ NE– G+
E 5 (A), E 6 (B), E 7 (C), E 8 (D) ENGINE CONTROL MODULE
SIL W FC #10 #20 #30 #40 #50 #60 RSO RSC PSW OX1 HT1 OX2 HT2 KNK1 KNK2 TFN SP1 E1 E01 E02 E03
I 1 IDLE AIR CONTROL VALVE
P10 POWER STEERING OIL PRESSURE SW
H 3 HEATED OXYGEN SENSOR (Bank 1 Sensor 1)
H 4 HEATED OXYGEN SENSOR (Bank 1 Sensor 2)
K 2 KNOCK SENSOR 1
K 3 KNOCK SENSOR 2
To Speedometer [Comb. Meter] <31–2><32–2>
To Detection SW (Transfer Neutral Position)<10–4><26–1>
Near the throttle body
EB

M

M OVERALL ELECTRICAL WIRING DIAGRAM

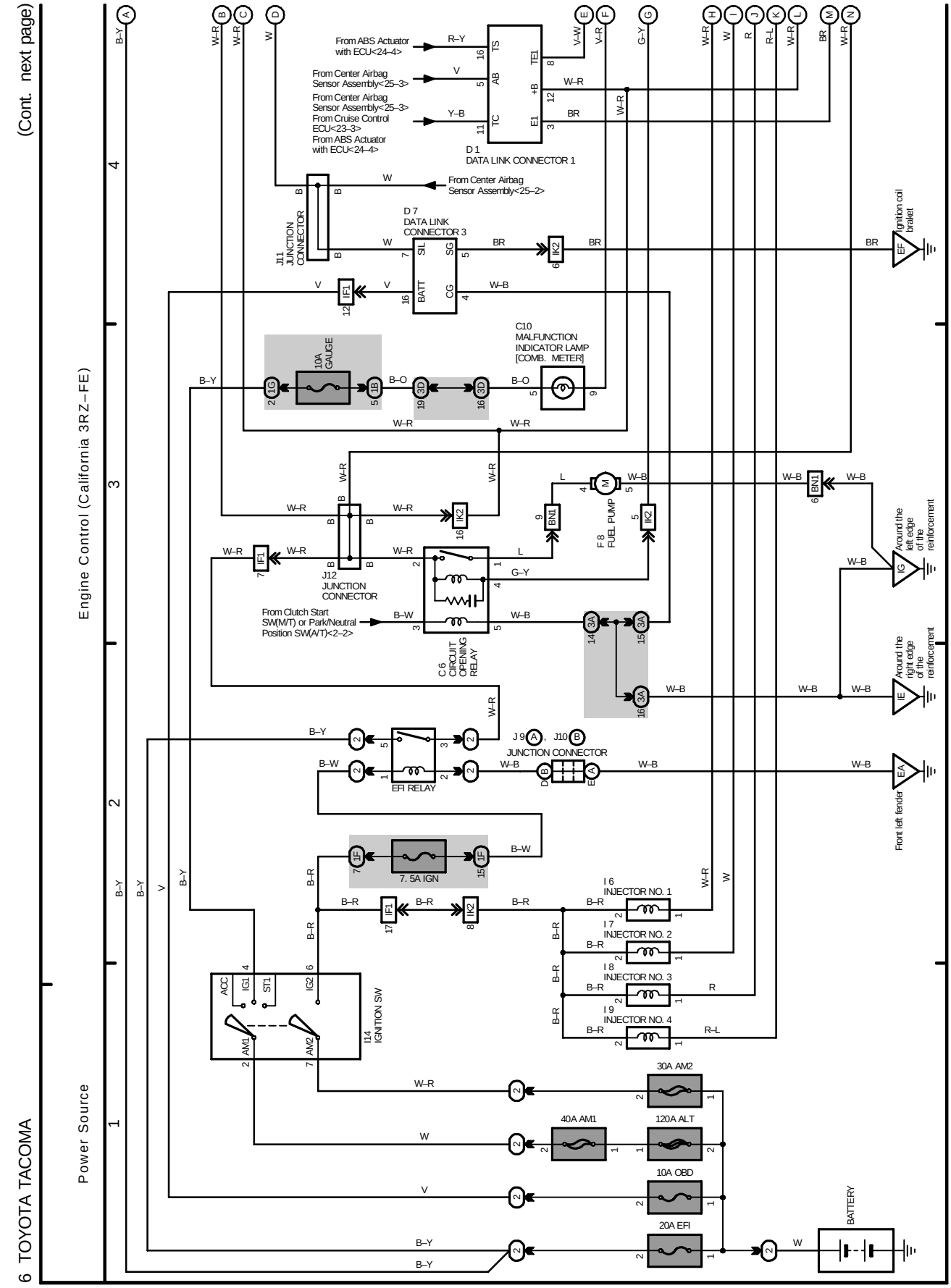

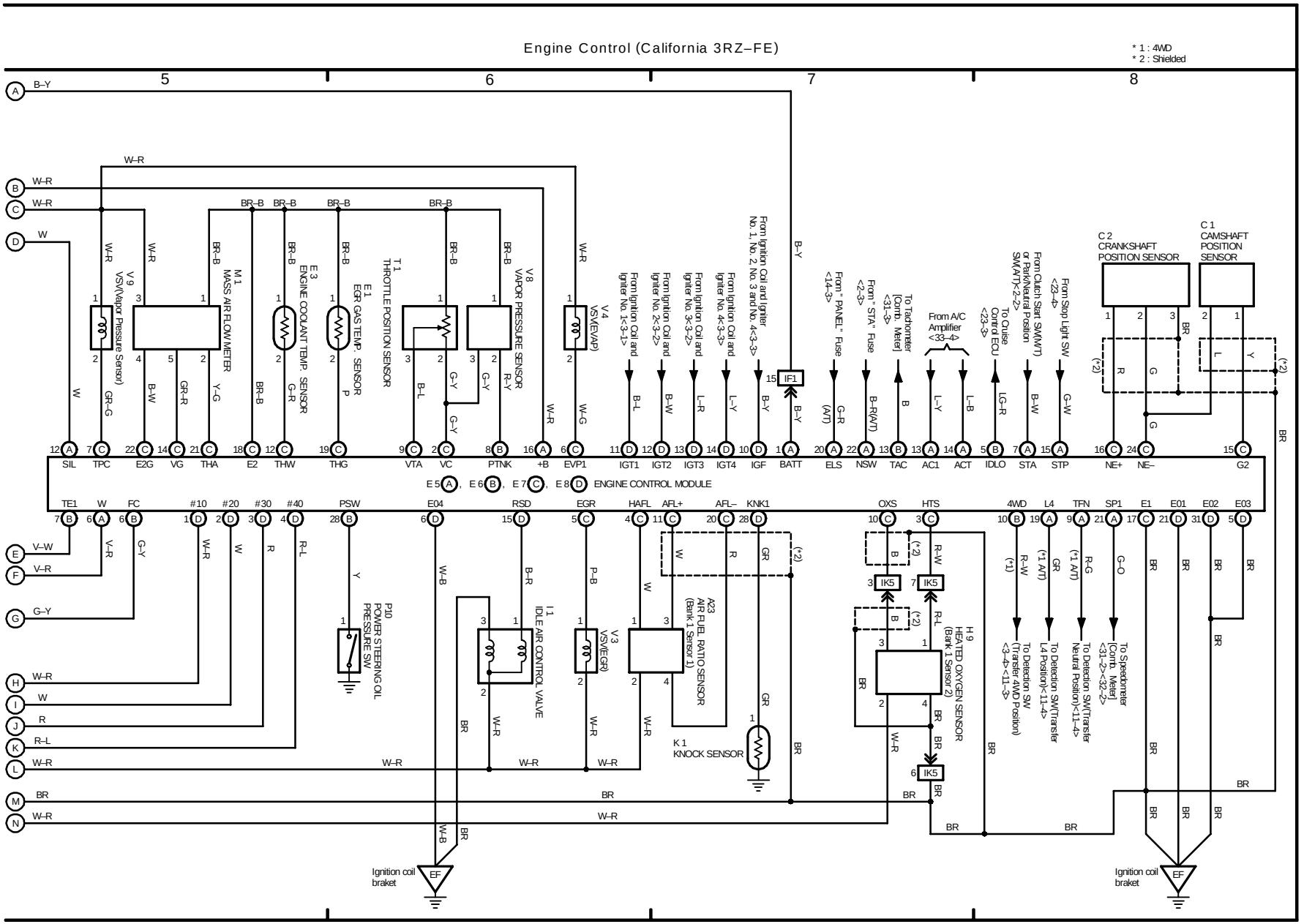
Engine Control (California 3RZ–FE)
* 1 : 4WD
* 2 : Shielded
5
6
7
8
E5 A, E6 B, E7 C, E8 D ENGINE CONTROL MODULE
SIL TPC E2G VG THA E2 THW THG VTA VC PTNK +B EVP1 IGT1 IGT2 IGT3 IGT4 IGF BATT ELS NSW TAC AC1 ACT IDLO STA STP NE+ NE– G2
TE1 W FC #10 #20 #30 #40 PSW E04 RSD EGR HAFL AFL+ AFL– KNK1 OXS HTS 4WD L4 TFN SP1 E1 E01 E02 E03
V9 VSV(Vapor Pressure Sensor)
M1 MASS AIR FLOW METER
E3 ENGINE COOLANT TEMP. SENSOR
E1 EGR GAS TEMP. SENSOR
T1 THROTTLE POSITION SENSOR
V8 VAPOR PRESSURE SENSOR
V4 VSV(EVAP)
From Ignition Coil and Igniter No. 1 <3-1>
From Ignition Coil and Igniter No. 2 <3-2>
From Ignition Coil and Igniter No. 3 <3-2>
From Ignition Coil and Igniter No. 4 <3-3>
From Ignition Coil and Igniter No. 1, No. 2, No. 3 and No. 4 <3-3>
IF1
From "PANEL" Fuse <14-3>
From "STA" Fuse <2-3>
To Tachometer [Comb. Meter] <31-3>
From A/C Amplifier <33-4>
To Cruise Control ECU <23-3>
From Clutch Start SW(M/T) or Park/Neutral Position SW(A/T)<2-2>
From Stop Light SW <23-4>
C 2 CRANKSHAFT POSITION SENSOR
C 1 CAMSHAFT POSITION SENSOR
P10 POWER STEERING OIL PRESSURE SW
I 1 IDLE AIR CONTROL VALVE
V3 VSV(EGR)
A23 AIR FUEL RATIO SENSOR (Bank 1 Sensor 1)
K 1 KNOCK SENSOR
IK5
H 9 HEATED OXYGEN SENSOR (Bank 1 Sensor 2)
To Detection SW (Transfer 4WD Position) <3-4><11-3>
To Detection SW(Transfer L4 Position)<11-4>
To Detection SW(Transfer Neutral Position)<11-4>
To Speedometer [Comb. Meter] <31-2><32-2>
Ignition coil braket
EF

M OVERALL ELECTRICAL WIRING DIAGRAM

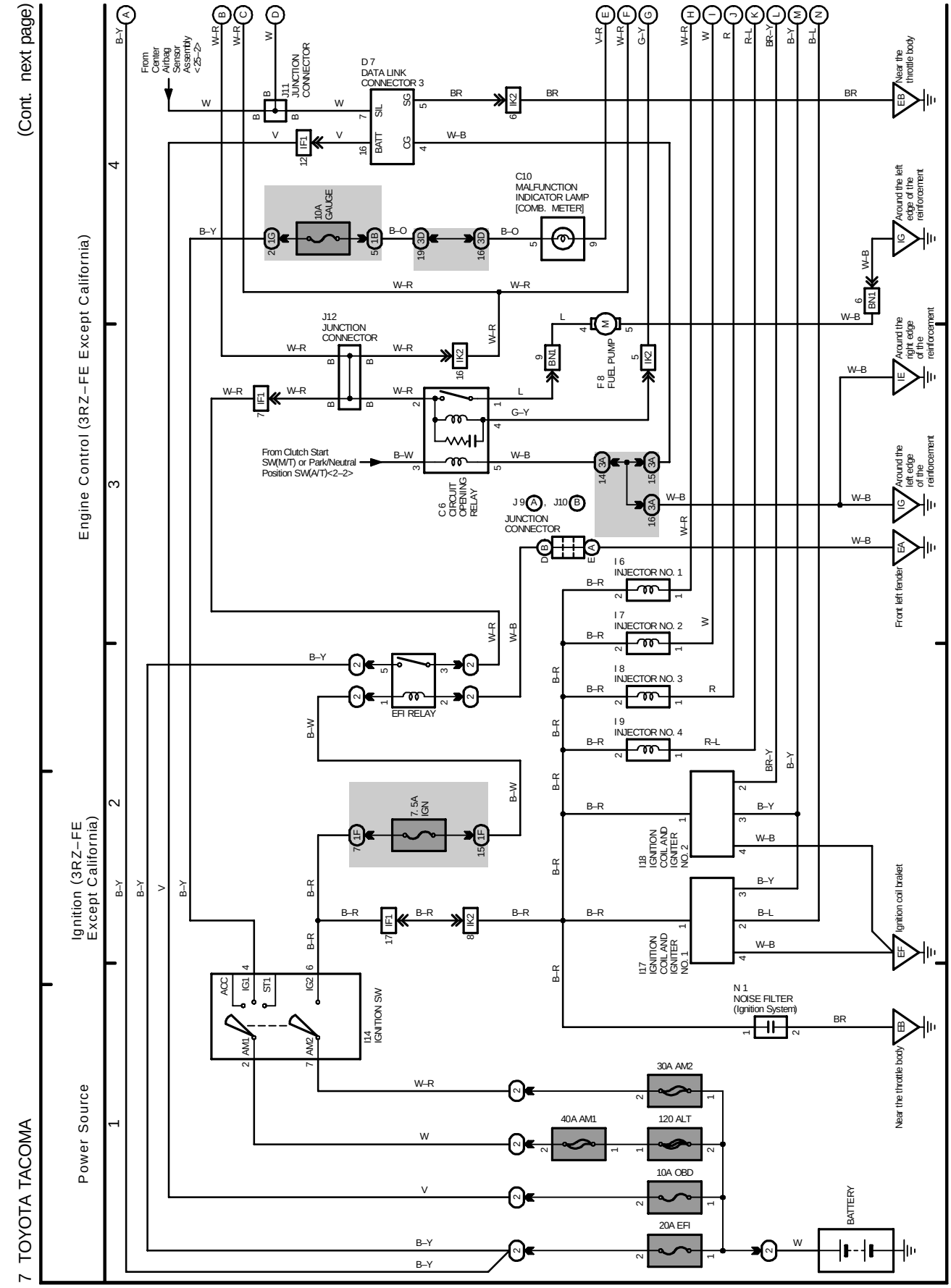

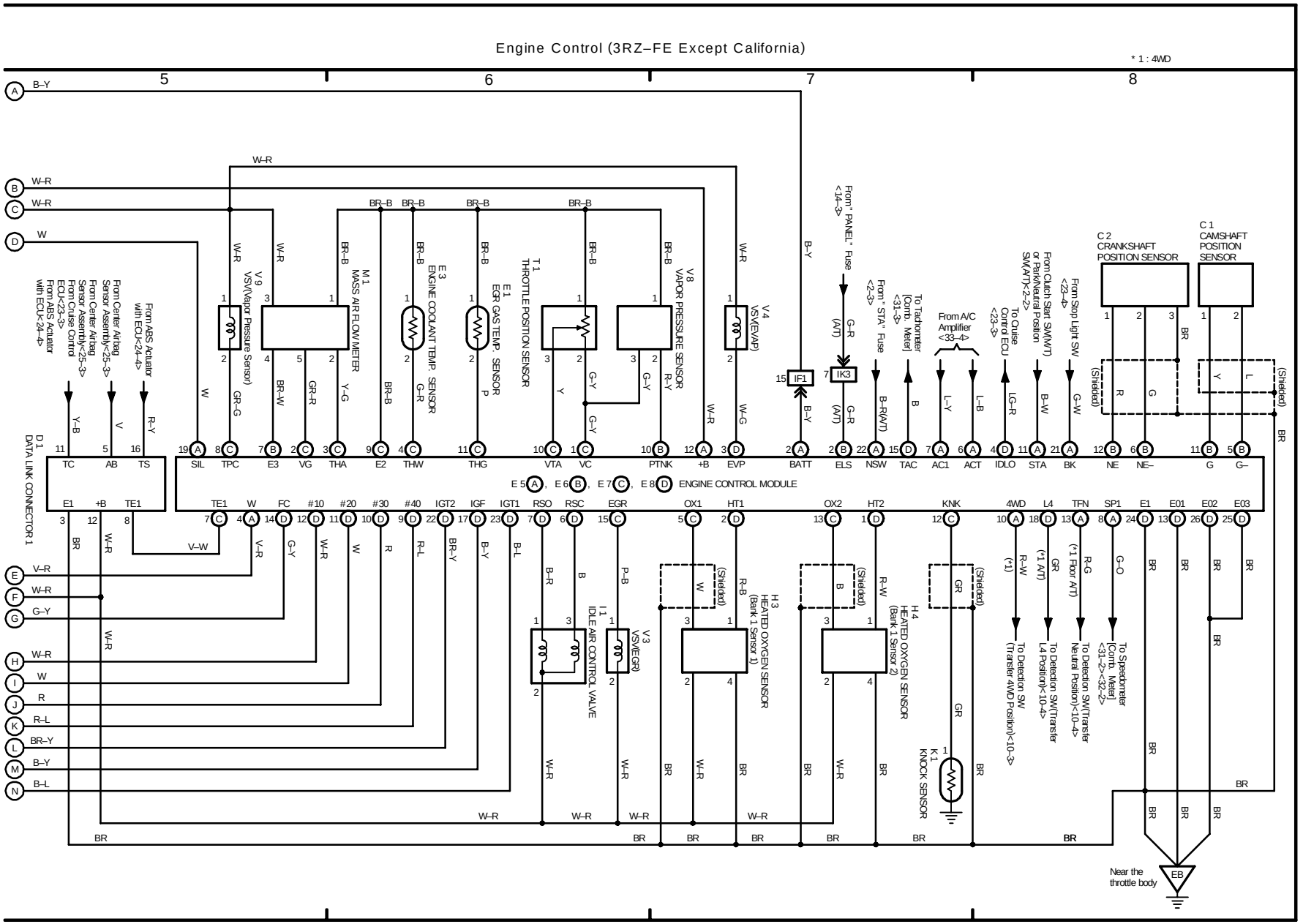
Engine Control (3RZ–FE Except California)
* 1 : 4WD
5
6
7
8
E5 A, E6 B, E7 C, E8 D ENGINE CONTROL MODULE
D1 DATA LINK CONNECTOR 1
V9 VSV(Vapor Pressure Sensor)
M1 MASS AIR FLOW METER
E3 ENGINE COOLANT TEMP. SENSOR
E1 EGR GAS TEMP. SENSOR
T1 THROTTLE POSITION SENSOR
V8 VAPOR PRESSURE SENSOR
V4 VSV(EVAP)
IF1
IK3
C2 CRANKSHAFT POSITION SENSOR
C1 CAMSHAFT POSITION SENSOR
I1 IDLE AIR CONTROL VALVE
V3 VSV(EGR)
H3 HEATED OXYGEN SENSOR (Bank 1 Sensor 1)
H4 HEATED OXYGEN SENSOR (Bank 1 Sensor 2)
K1 KNOCK SENSOR
(Shielded)
Near the throttle body
EB
TC AB TS SIL TPC E3 VG THA E2 THW THG VTA VC PTNK +B EVP BATT ELS NSW TAC AC1 ACT IDLO STA BK NE NE– G G–
E1 +B TE1 TE1 W FC #10 #20 #30 #40 IGT2 IGF IGT1 RSO RSC EGR OX1 HT1 OX2 HT2 KNK 4WD L4 TFN SP1 E1 E01 E02 E03

M OVERALL ELECTRICAL WIRING DIAGRAM

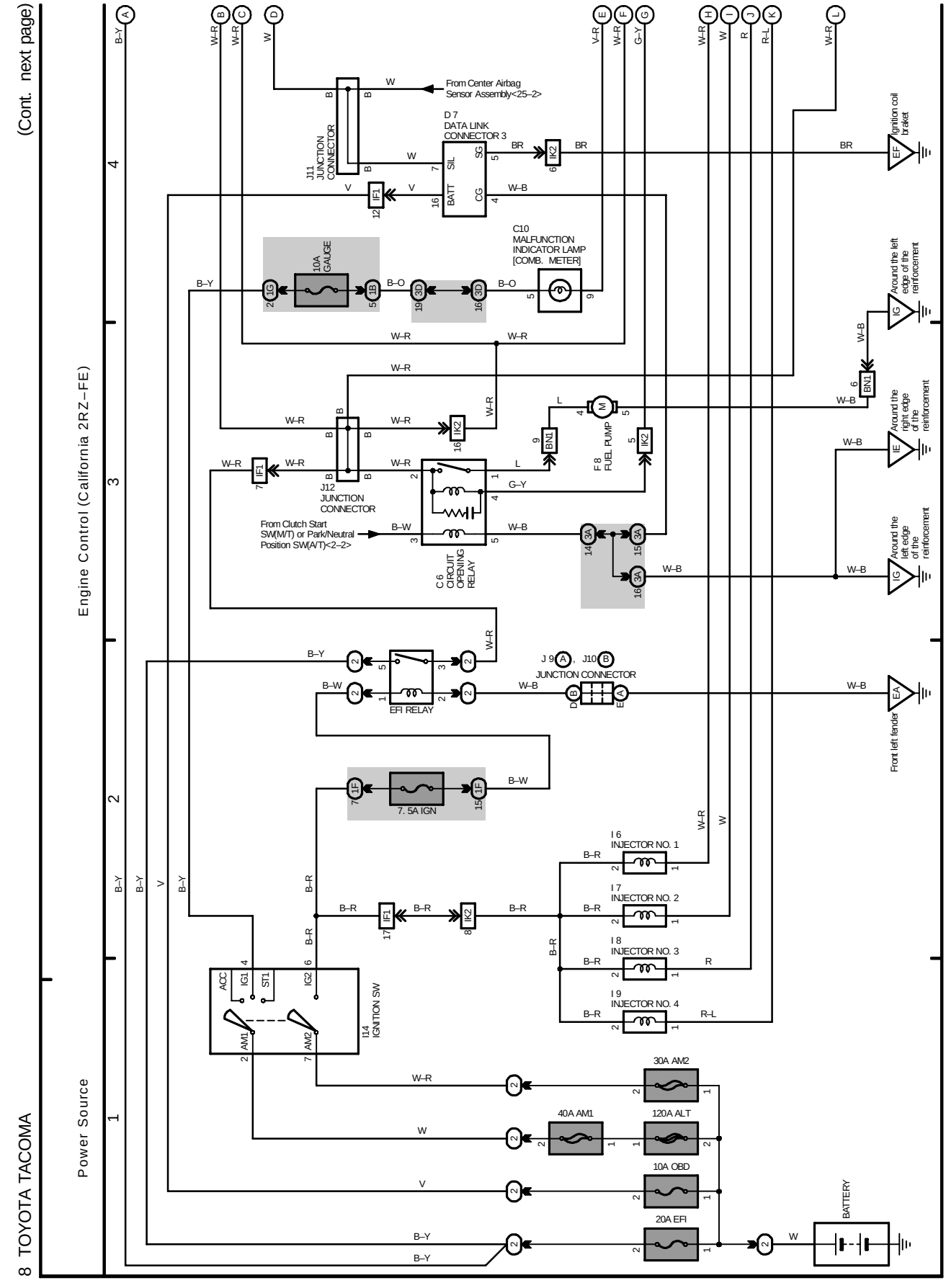

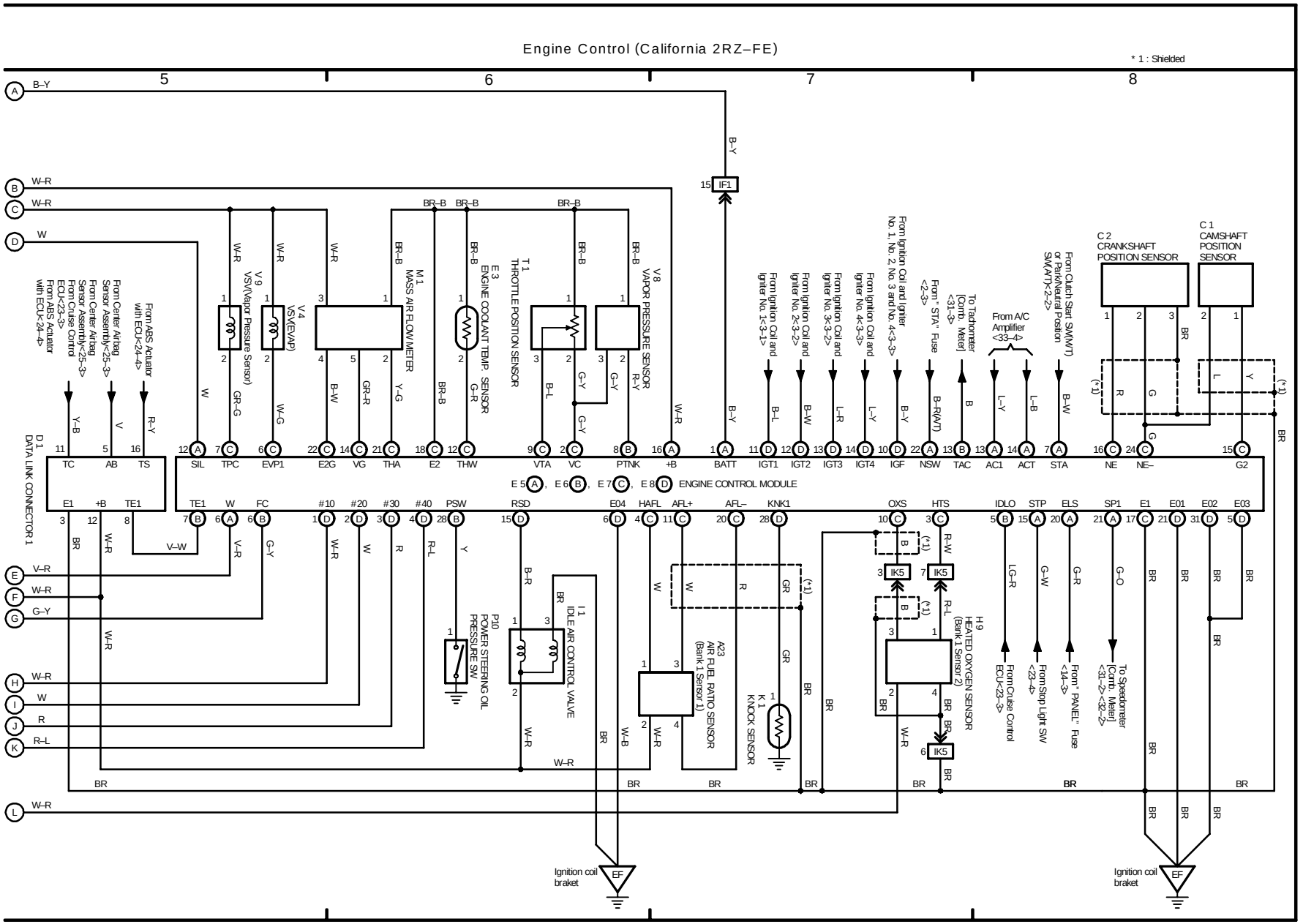
Engine Control (California 2RZ–FE)
* 1 : Shielded
5
6
7
8
D1 DATA LINK CONNECTOR 1
TC AB TS
E1 +B TE1
SIL TPC EVP1 E2G VG THA E2 THW VTA VC PTNK +B BATT IGT1 IGT2 IGT3 IGT4 IGF NSW TAC AC1 ACT STA NE NE– G2
TE1 W FC #10 #20 #30 #40 PSW RSD E04 HAFL AFL+ AFL– KNK1 OXS HTS IDLO STP ELS SP1 E1 E01 E02 E03
E5 A , E6 B , E7 C , E8 D ENGINE CONTROL MODULE
IF1
V9 VSV(Vapor Pressure Sensor)
V4 VSV(EVAP)
M1 MASS AIR FLOW METER
E3 ENGINE COOLANT TEMP. SENSOR
T1 THROTTLE POSITION SENSOR
V8 VAPOR PRESSURE SENSOR
From Ignition Coil and Igniter No. 1<3-1>
From Ignition Coil and Igniter No. 2<3-2>
From Ignition Coil and Igniter No. 3<3-2>
From Ignition Coil and Igniter No. 4<3-3>
From Ignition Coil and Igniter No. 1, No. 2, No. 3 and No. 4<3-3>
From "STA" Fuse <2-3>
To Tachometer [Comb. Meter] <31-3>
From A/C Amplifier <33-4>
From Clutch Start SW(M/T) or Park/Neutral Position SW(A/T)<2-2>
C2 CRANKSHAFT POSITION SENSOR
C1 CAMSHAFT POSITION SENSOR
From ABS Actuator with ECU<24-4>
From Center Airbag Sensor Assembly<25-3>
From Center Airbag Sensor Assembly<25-3>
From Cruise Control ECU<23-3>
From ABS Actuator with ECU<24-4>
I1 IDLE AIR CONTROL VALVE
P10 POWER STEERING OIL PRESSURE SW
A23 AIR FUEL RATIO SENSOR (Bank 1 Sensor 1)
K1 KNOCK SENSOR
H9 HEATED OXYGEN SENSOR (Bank 1 Sensor 2)
IK5
From Cruise Control ECU<23-3>
From Stop Light SW <23-4>
From "PANEL" Fuse <14-3>
To Speedometer [Comb. Meter] <31-2> <32-2>
Ignition coil braket
EF
M

M OVERALL ELECTRICAL WIRING DIAGRAM

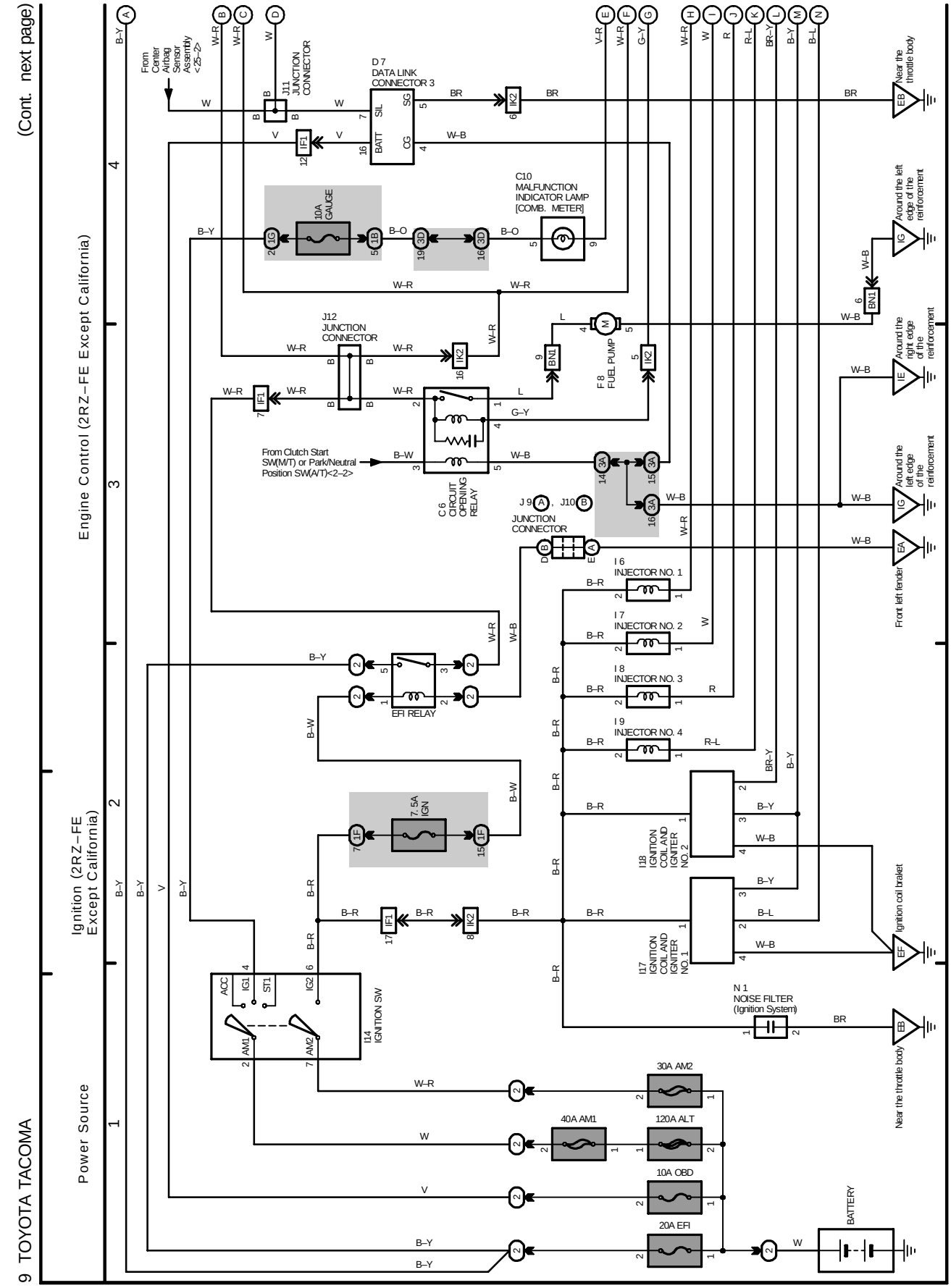

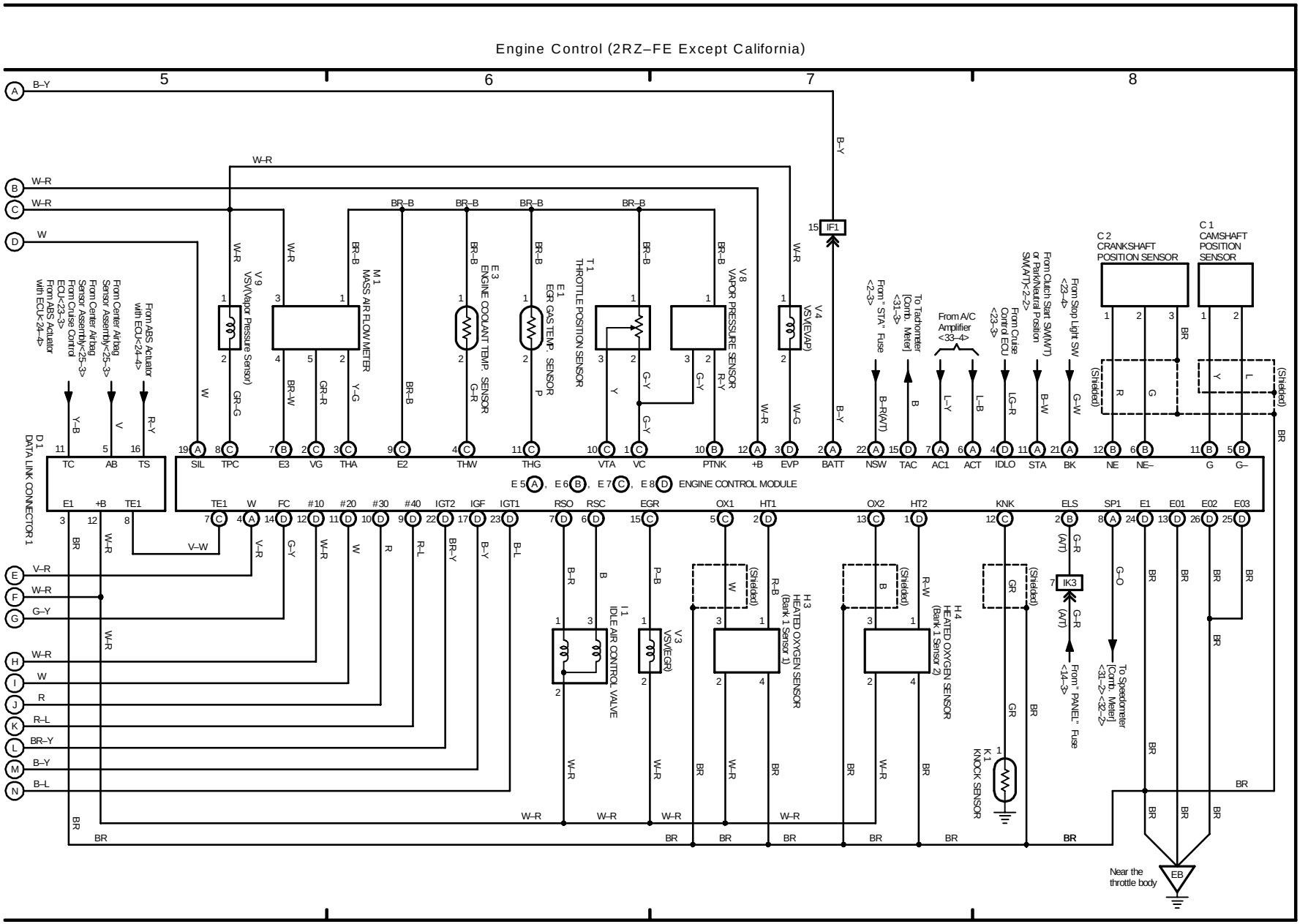
Engine Control (2RZ–FE Except California)
5
6
7
8
E 5 (A), E 6 (B), E 7 (C), E 8 (D) ENGINE CONTROL MODULE
D 1 DATA LINK CONNECTOR 1
V 9 VSV(Vapor Pressure Sensor)
M 1 MASS AIR FLOW METER
E 3 ENGINE COOLANT TEMP. SENSOR
E 1 EGR GAS TEMP. SENSOR
T 1 THROTTLE POSITION SENSOR
V 8 VAPOR PRESSURE SENSOR
V 4 VSV(EVAP)
IF1
C 2 CRANKSHAFT POSITION SENSOR
C 1 CAMSHAFT POSITION SENSOR
I 1 IDLE AIR CONTROL VALVE
V 3 VSV(EGR)
H 3 HEATED OXYGEN SENSOR (Bank 1 Sensor 1)
H 4 HEATED OXYGEN SENSOR (Bank 1 Sensor 2)
K 1 KNOCK SENSOR
IK3
EB
Near the throttle body
TC
AB
TS
SIL
TPC
E3
VG
THA
E2
THW
THG
VTA
VC
PTNK
+B
EVP
BATT
NSW
TAC
AC1
ACT
IDLO
STA
BK
NE
NE–
G
G–
E1
+B
TE1
TE1
W
FC
#10
#20
#30
#40
IGT2
IGF
IGT1
RSO
RSC
EGR
OX1
HT1
OX2
HT2
KNK
ELS
SP1
E1
E01
E02
E03
From ABS Actuator with ECU<24–4>
From Center Airbag Sensor Assembly<25–3>
From Center Airbag Sensor Assembly<25–3>
From Cruise Control ECU<23–3>
From ABS Actuator with ECU<24–4>
From "STA" Fuse <2–3>
To Tachometer [Comb. Meter] <31–3>
From A/C Amplifier <33–4>
From Cruise Contrd ECU <23–3>
From Clutch Start SW(M/T) or Park/Neutral Position SW(A/T)<2–2>
From Stop Light SW <23–4>
To Speedometer [Comb. Meter] <31–2> <32–2>
From "ENGINE" Fuse <14–3>
From "PANEL" Fuse <14–3>
(Shielded)
(A/T)

M OVERALL ELECTRICAL WIRING DIAGRAM

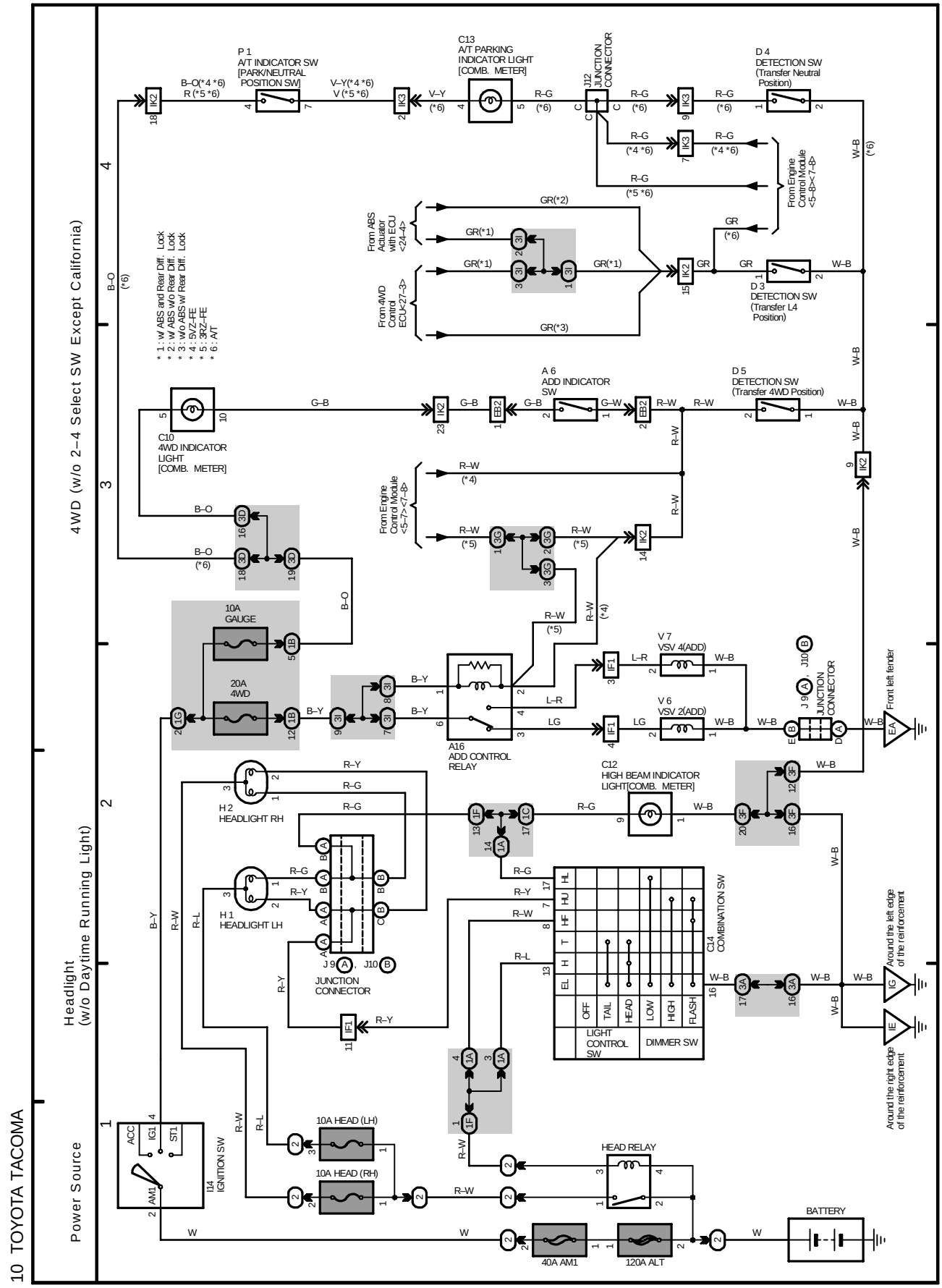

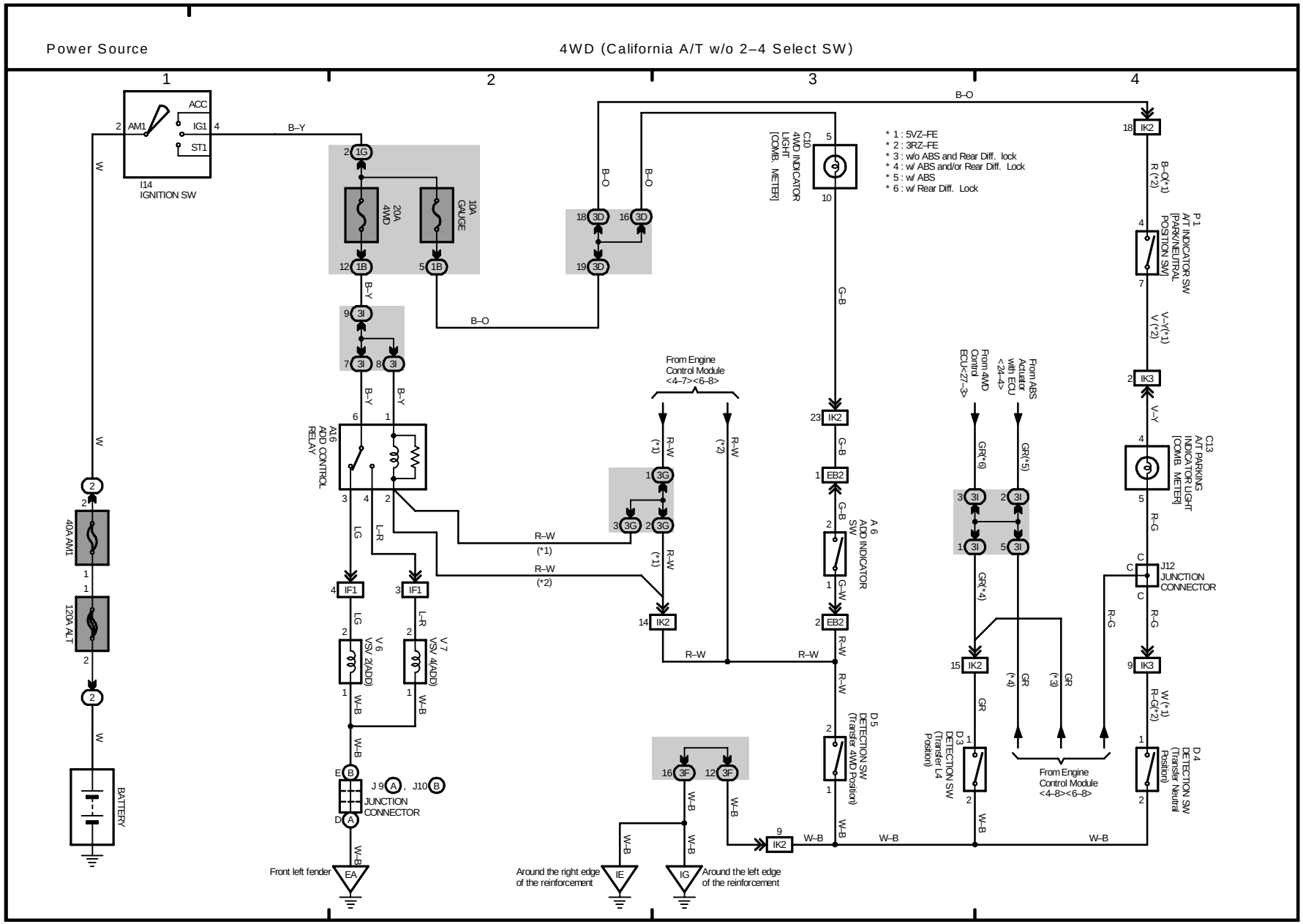
Power Source
4WD (California A/T w/o 2–4 Select SW)
1
2
3
4
ACC
AM1
IG1
ST1
I14
IGNITION SW
B–Y
W
40A AM1
120A ALT
BATTERY
1G
20A 4WD
10A GAUGE
1B
B–O
3I
A16 ADD CONTROL RELAY
B–Y
L–R
LG
IF1
V6 VSV 2(ADD)
V7 VSV 4(ADD)
W–B
E B
J9 A
J10 B
JUNCTION CONNECTOR
D A
Front left fender
EA
3D
C10 4WD INDICATOR LIGHT [COMB. METER]
* 1 : 5VZ–FE
* 2 : 3RZ–FE
* 3 : w/o ABS and Rear Diff. lock
* 4 : w/ ABS and/or Rear Diff. Lock
* 5 : w/ ABS
* 6 : w/ Rear Diff. Lock
From Engine Control Module <4–7><6–8>
R–W
(*1)
(*2)
3G
IK2
EB2
G–B
A6 ADD INDICATOR SW
G–W
D5 DETECTION SW (Transfer 4WD Position)
3F
IE
IG
Around the right edge of the reinforcement
Around the left edge of the reinforcement
From 4WD Control ECU<27–3>
From ABS Actuator with ECU <24–4>
GR(*6)
GR(*5)
GR(*4)
GR
(*3)
(*4)
D3 DETECTION SW (Transfer L4 Position)
From Engine Control Module <4–8><6–8>
P1 A/T INDICATOR SW [PARK/NEUTRAL POSITION SW]
B–O(*1)
R (*2)
V–Y(*1)
V (*2)
V–Y
C13 A/T PARKING INDICATOR LIGHT [COMB. METER]
R–G
J12 JUNCTION CONNECTOR
W (*1)
R–G(*2)
D4 DETECTION SW (Transfer Neutral Position)

M

M OVERALL ELECTRICAL WIRING DIAGRAM

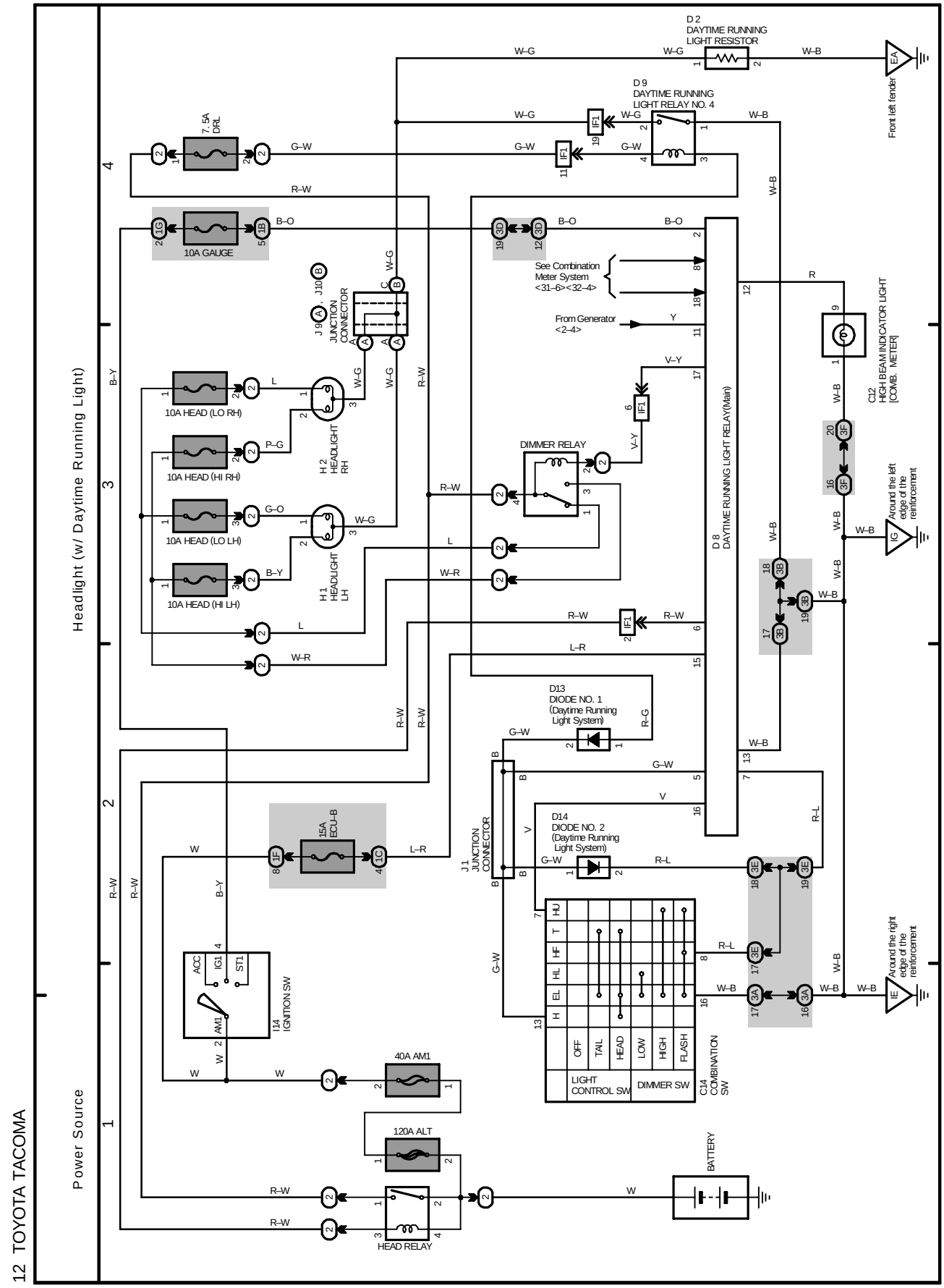

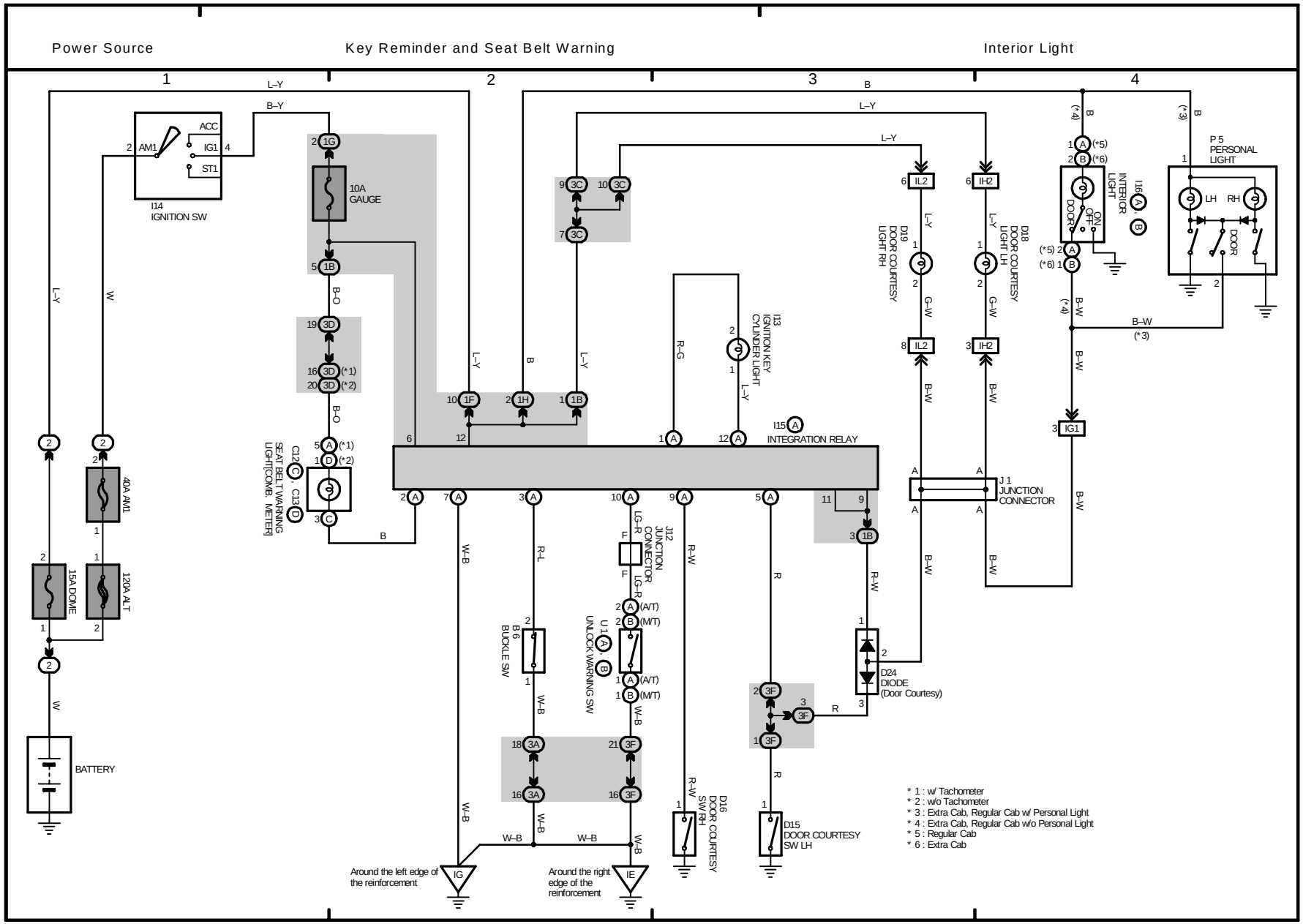
Power Source
Key Reminder and Seat Belt Warning
Interior Light
1
2
3
4
ACC
IG1
ST1
AM1
I14
IGNITION SW
10A
GAUGE
40A AM1
15A DOME
120A ALT
BATTERY
SEAT BELT WARNING LIGHT(COMB. METER)
C12
C13
I13
IGNITION KEY CYLINDER LIGHT
I15
INTEGRATION RELAY
J12
JUNCTION CONNECTOR
B6
BUCKLE SW
U1
UNLOCK WARNING SW
D16
DOOR COURTESY SW RH
D15
DOOR COURTESY SW LH
D19
DOOR COURTESY LIGHT RH
D18
DOOR COURTESY LIGHT LH
D24
DIODE
(Door Courtesy)
J1
JUNCTION CONNECTOR
I16
INTERIOR LIGHT
DOOR
ON
OFF
P5
PERSONAL LIGHT
LH
RH
DOOR
Around the left edge of the reinforcement
IG
Around the right edge of the reinforcement
IE
* 1 : w/ Tachometer
* 2 : w/o Tachometer
* 3 : Extra Cab, Regular Cab w/ Personal Light
* 4 : Extra Cab, Regular Cab w/o Personal Light
* 5 : Regular Cab
* 6 : Extra Cab

M OVERALL ELECTRICAL WIRING DIAGRAM

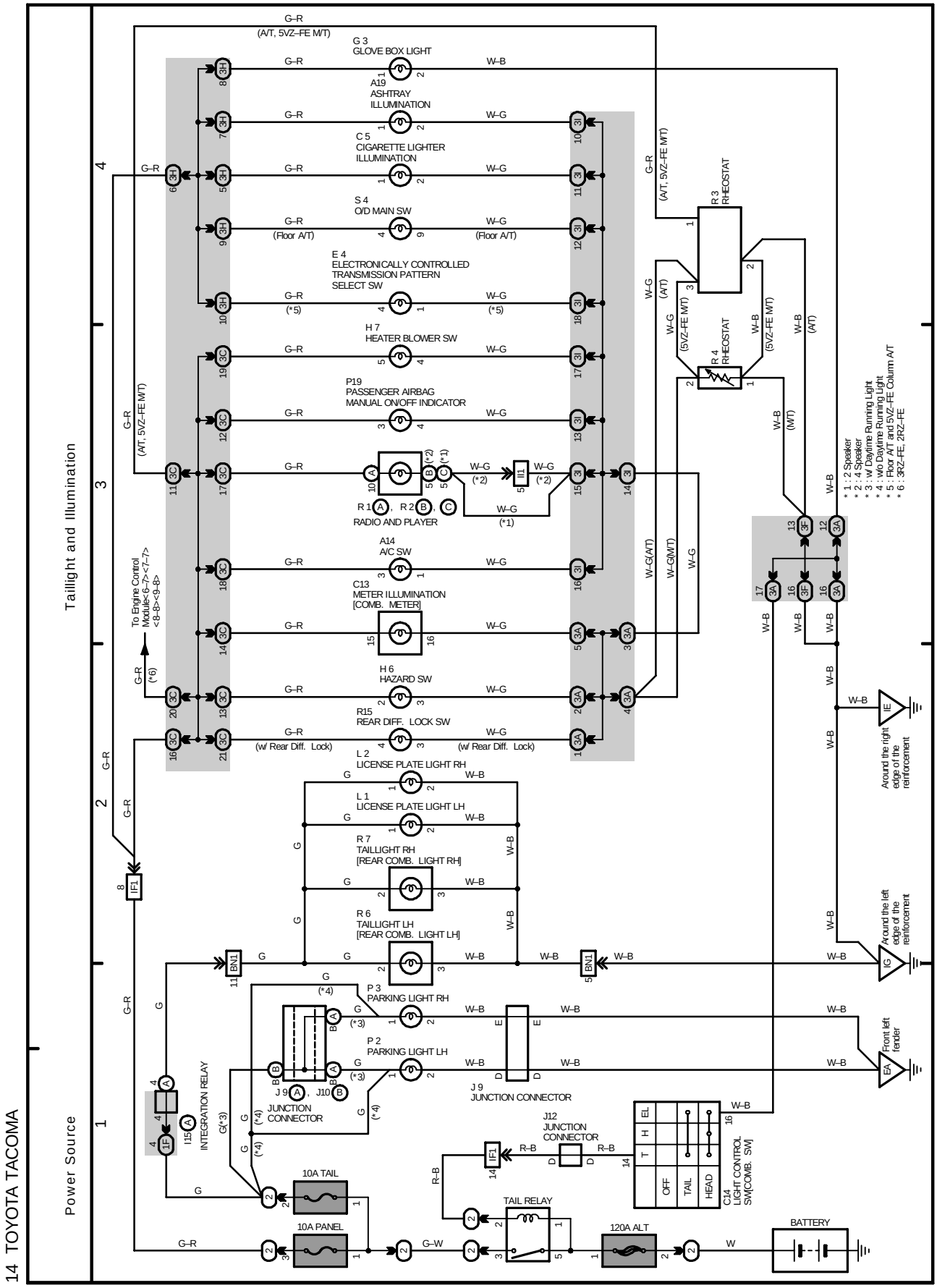

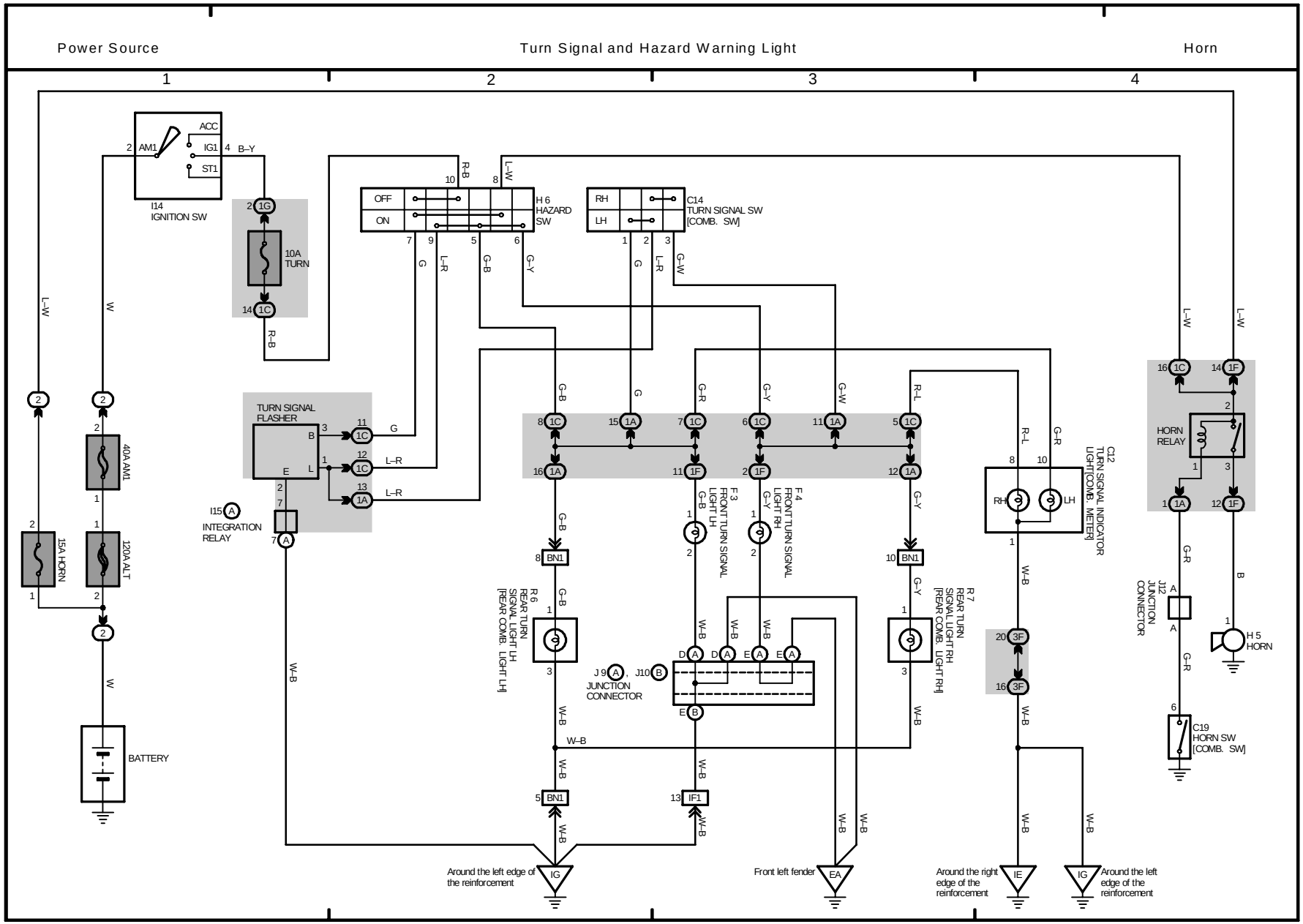
Power Source
Turn Signal and Hazard Warning Light
Horn
1
2
3
4
ACC
IG1
ST1
AM1
I14
IGNITION SW
B–Y
10A
TURN
OFF
ON
H 6
HAZARD
SW
RH
LH
C14
TURN SIGNAL SW
[COMB. SW]
TURN SIGNAL
FLASHER
I15
INTEGRATION
RELAY
40A AM1
15A HORN
120A ALT
BATTERY
F 3
FRONT TURN SIGNAL
LIGHT LH
F 4
FRONT TURN SIGNAL
LIGHT RH
R 6
REAR TURN
SIGNAL LIGHT LH
[REAR COMB. LIGHT LH]
R 7
REAR TURN
SIGNAL LIGHT RH
[REAR COMB. LIGHT RH]
J 9
J10
JUNCTION
CONNECTOR
C12
TURN SIGNAL INDICATOR
LIGHT[COMB. METER]
HORN
RELAY
J12
JUNCTION
CONNECTOR
H 5
HORN
C19
HORN SW
[COMB. SW]
Around the left edge of
the reinforcement
Front left fender
Around the right
edge of the
reinforcement
Around the left
edge of the
reinforcement

M

M OVERALL ELECTRICAL WIRING DIAGRAM

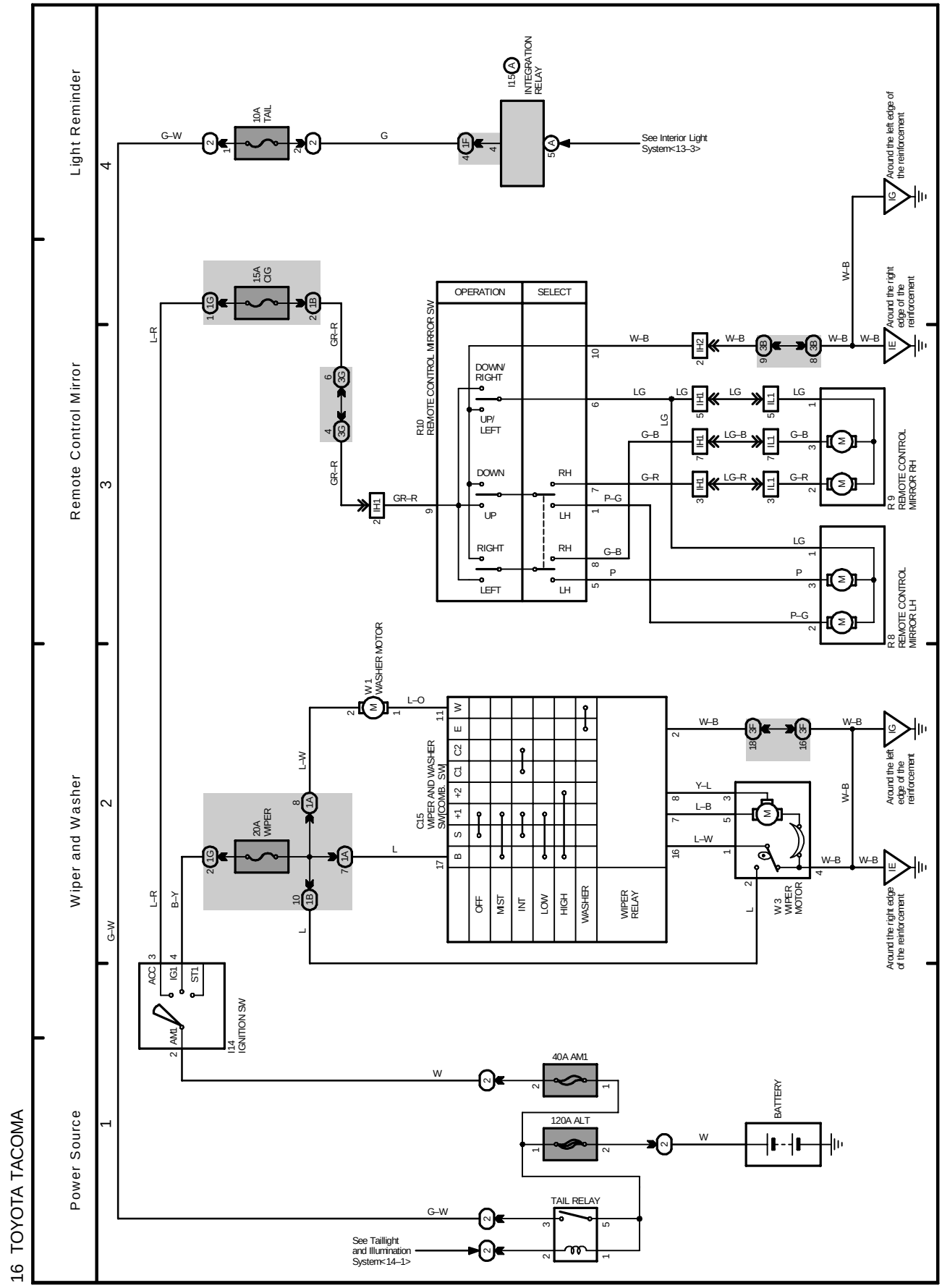

M OVERALL ELECTRICAL WIRING DIAGRAM

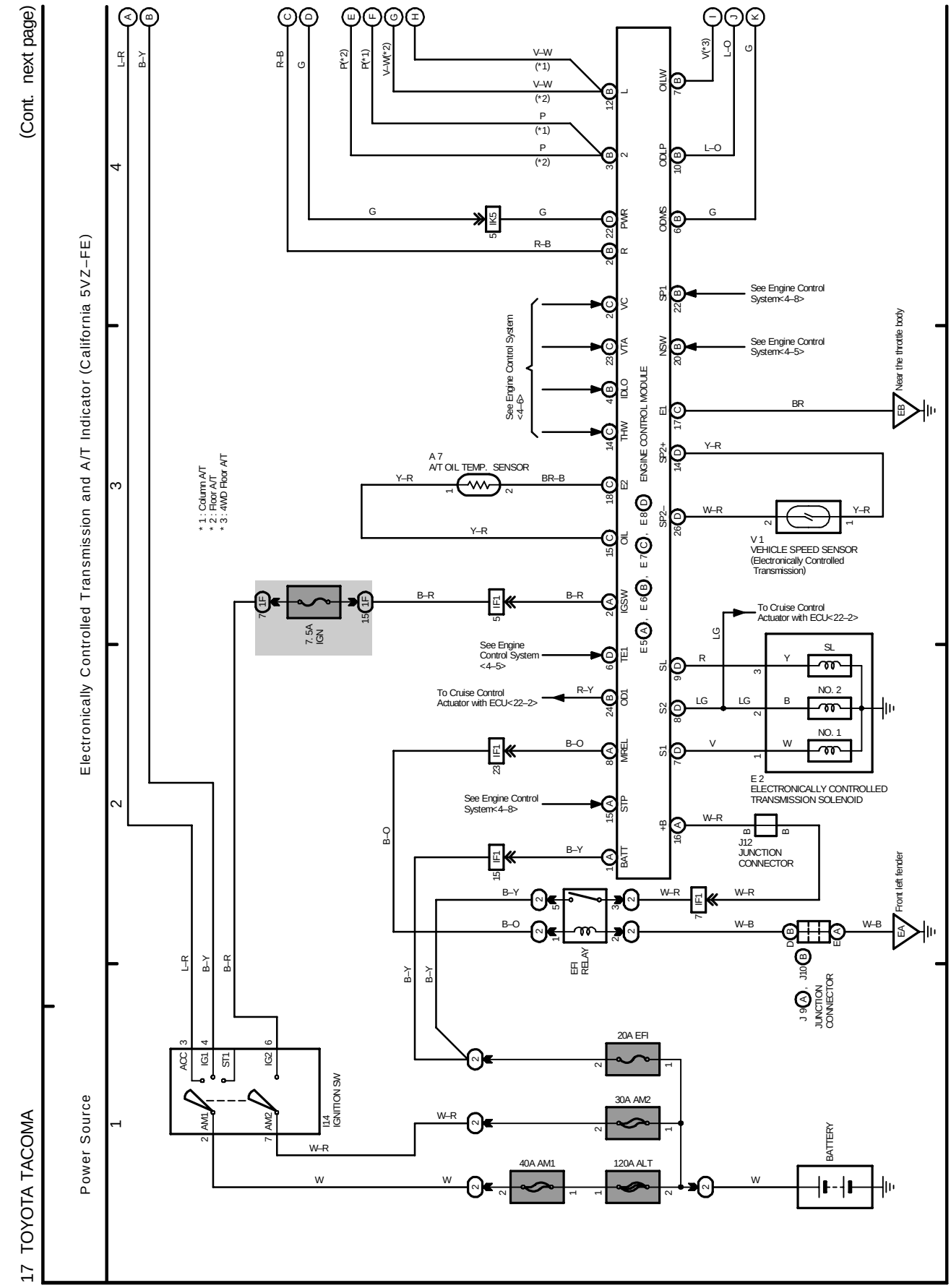

Electronically Controlled Transmission and A/T Indicator (California 5VZ–FE)

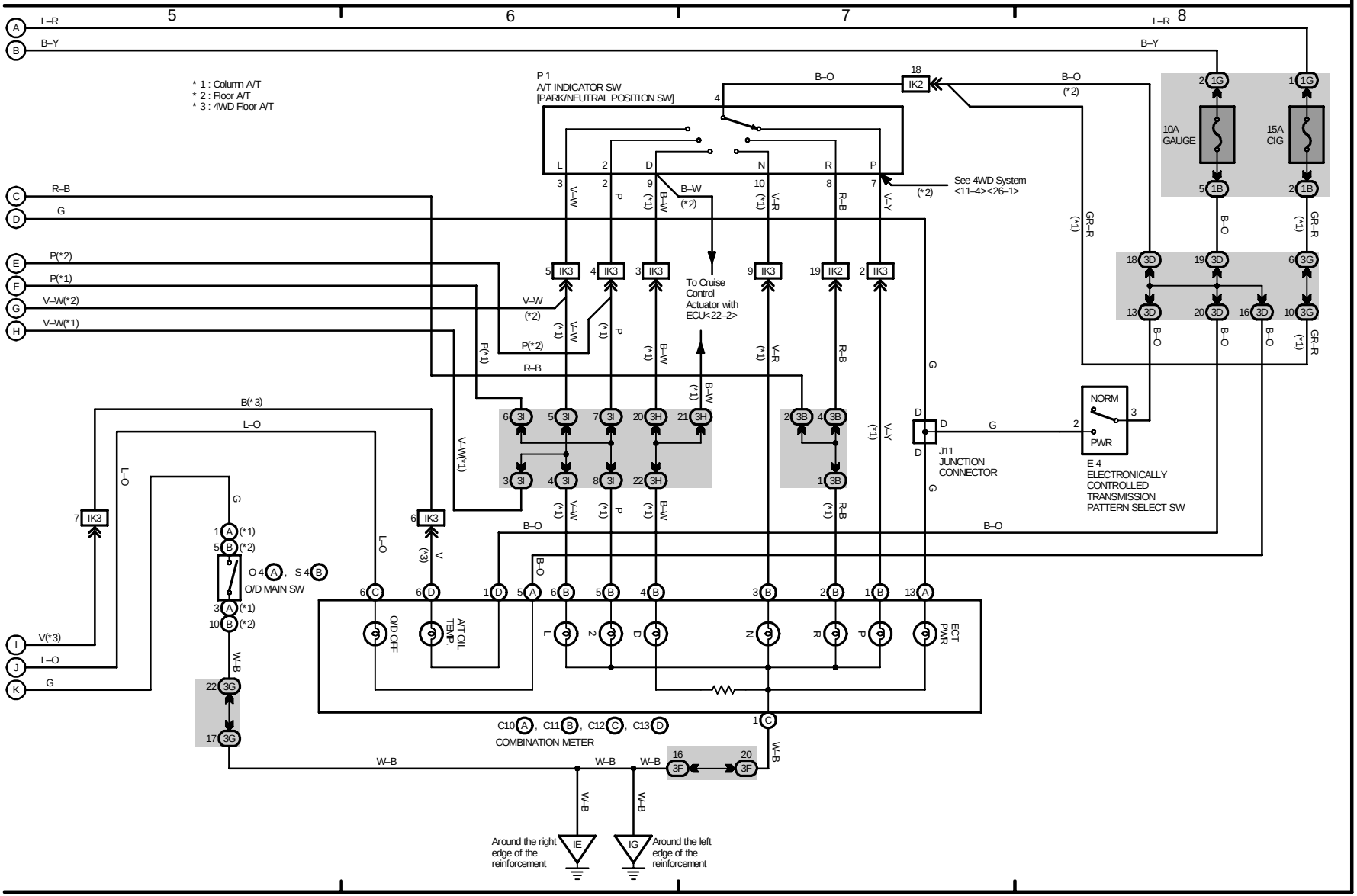

M OVERALL ELECTRICAL WIRING DIAGRAM

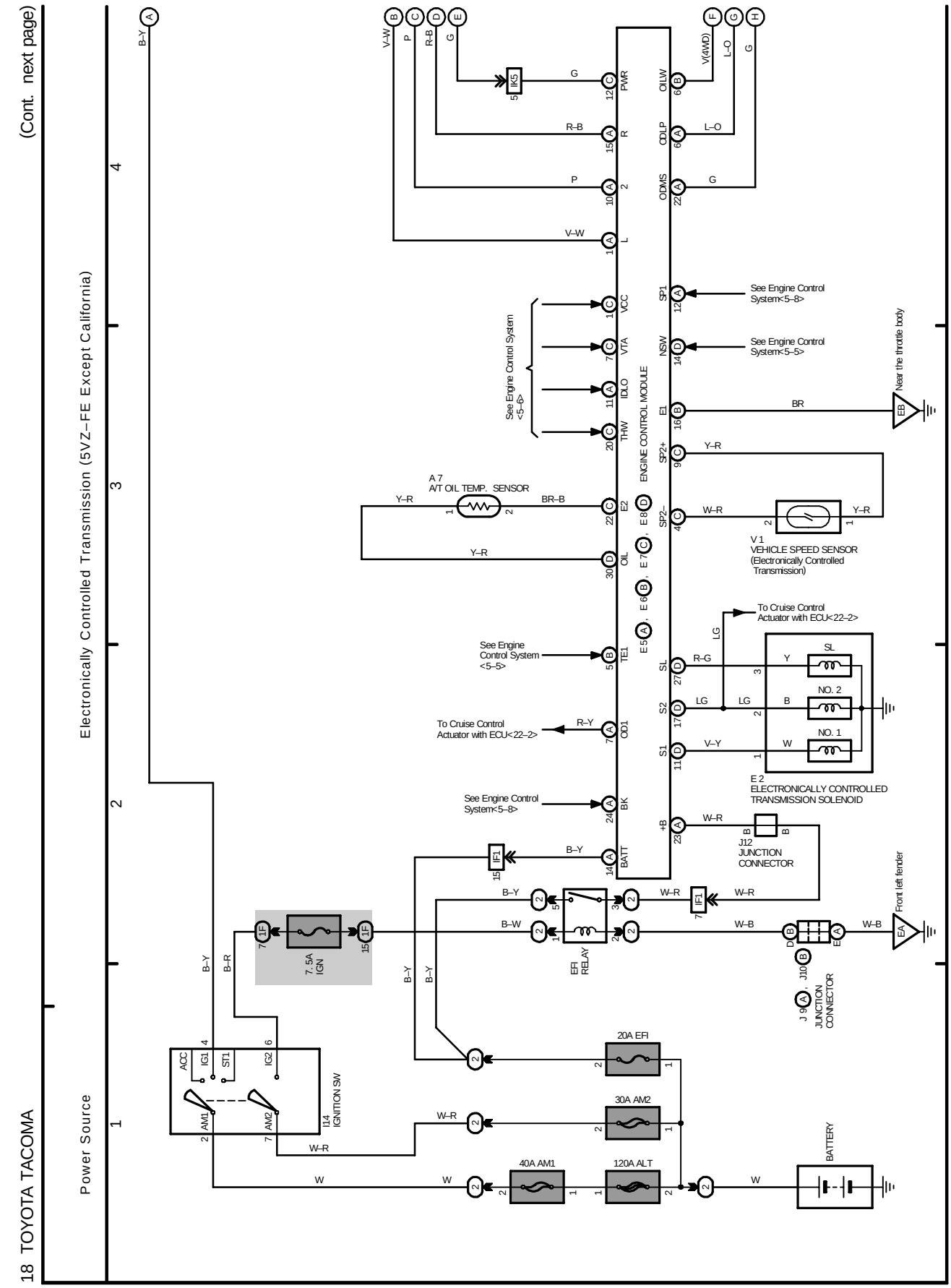

Electronically Controlled Transmission (5VZ–FE Except California)

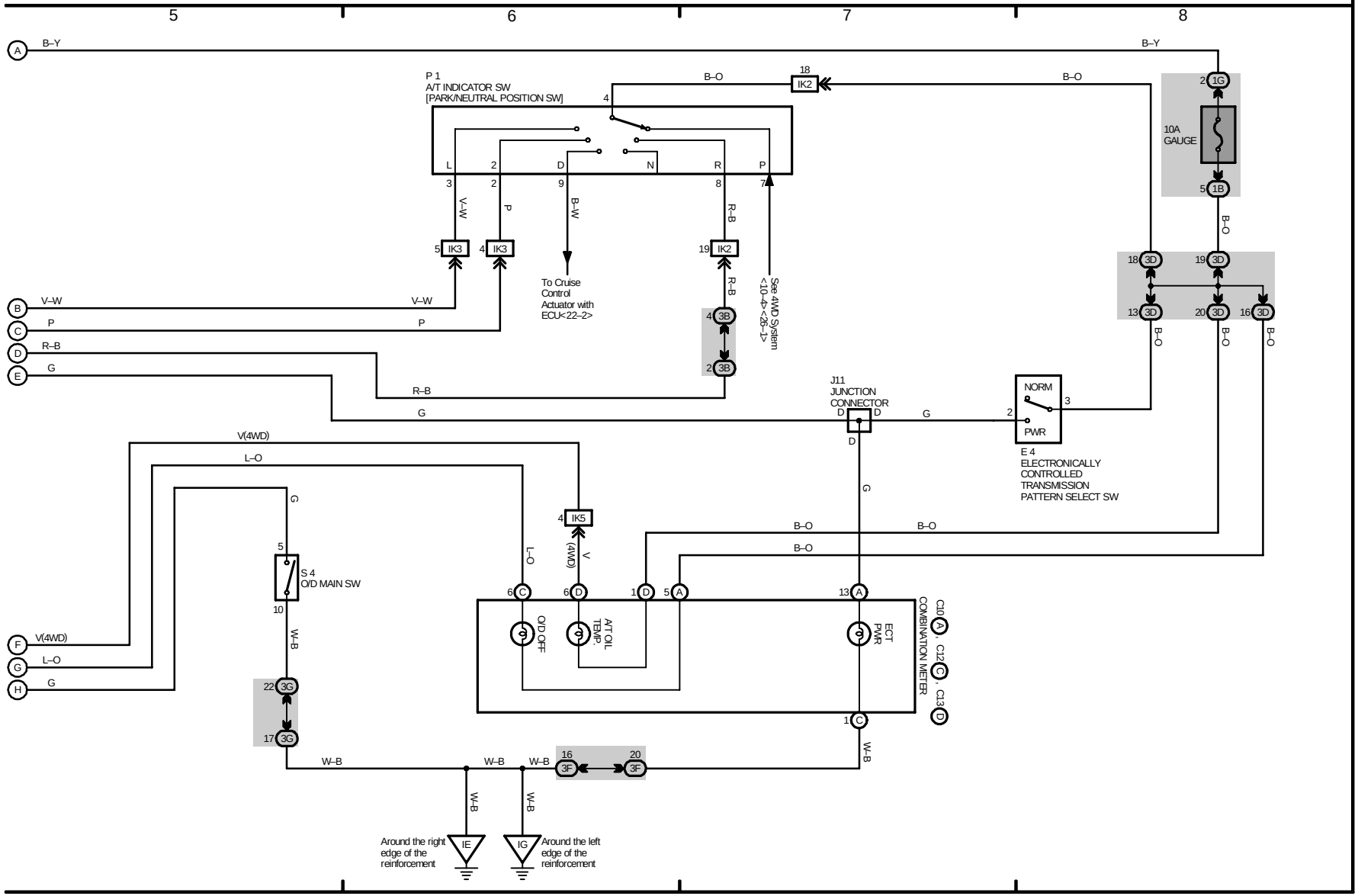

M

M OVERALL ELECTRICAL WIRING DIAGRAM

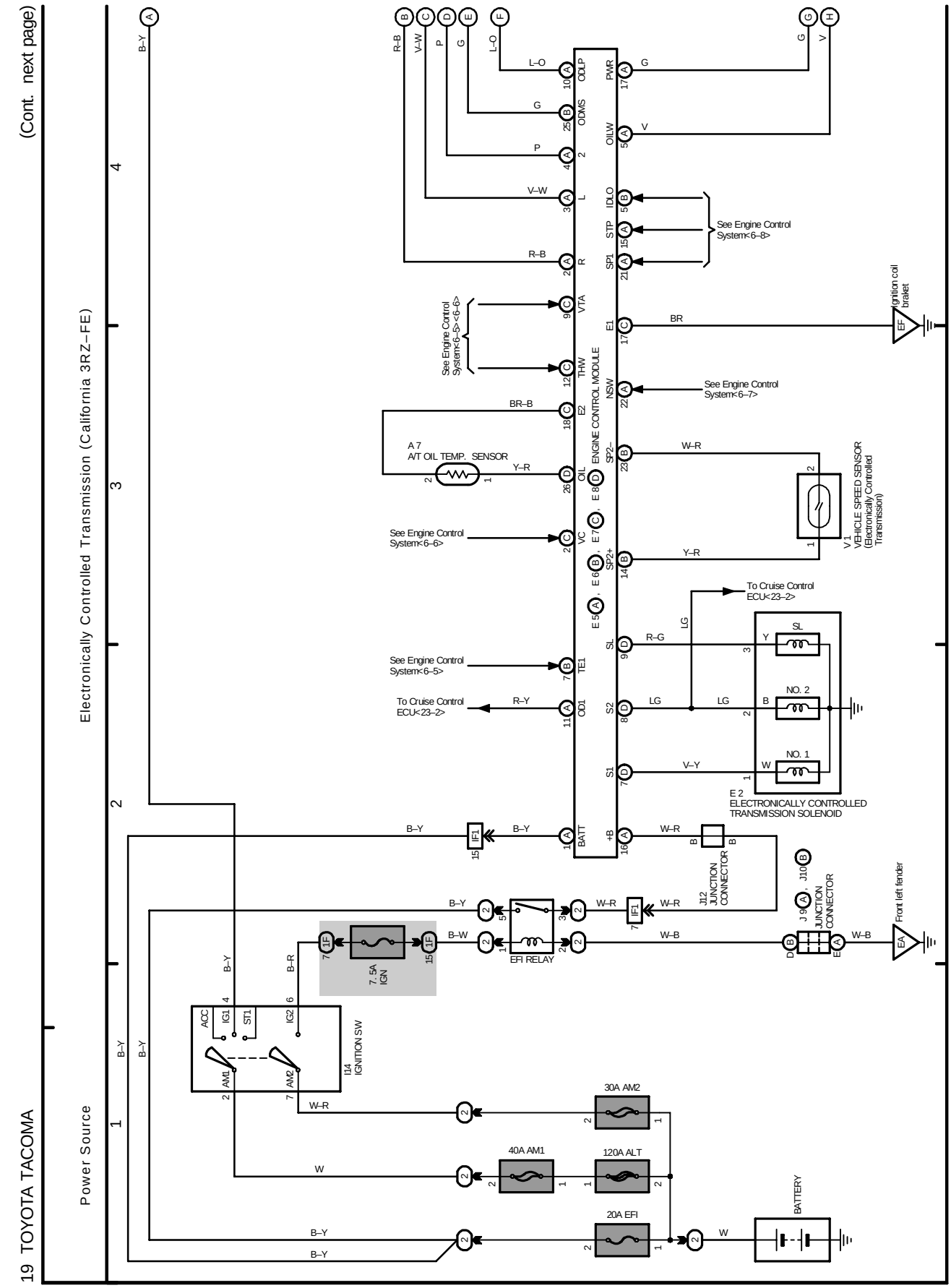

Electronically Controlled Transmission (California 3RZ–FE)

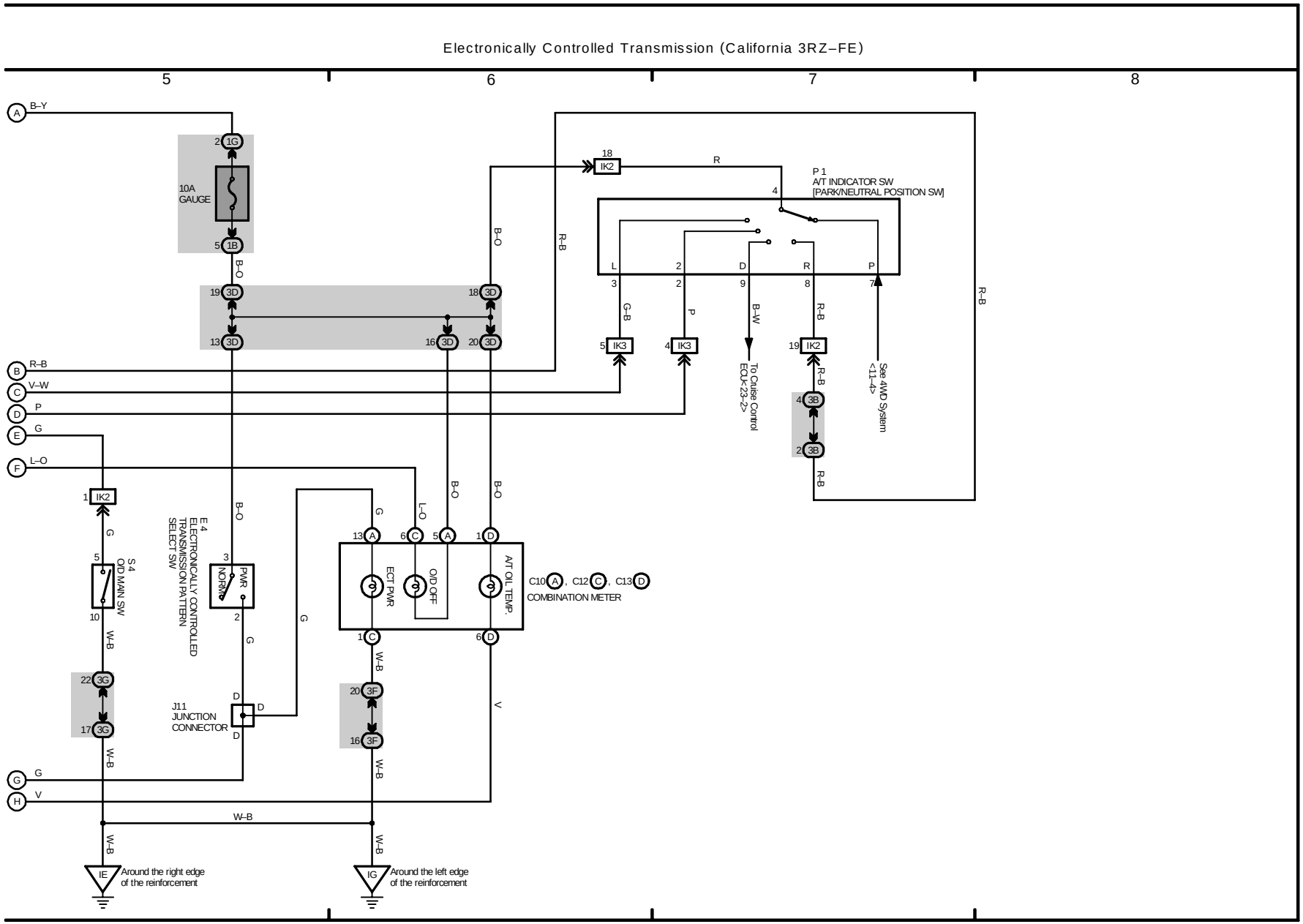

M

M OVERALL ELECTRICAL WIRING DIAGRAM

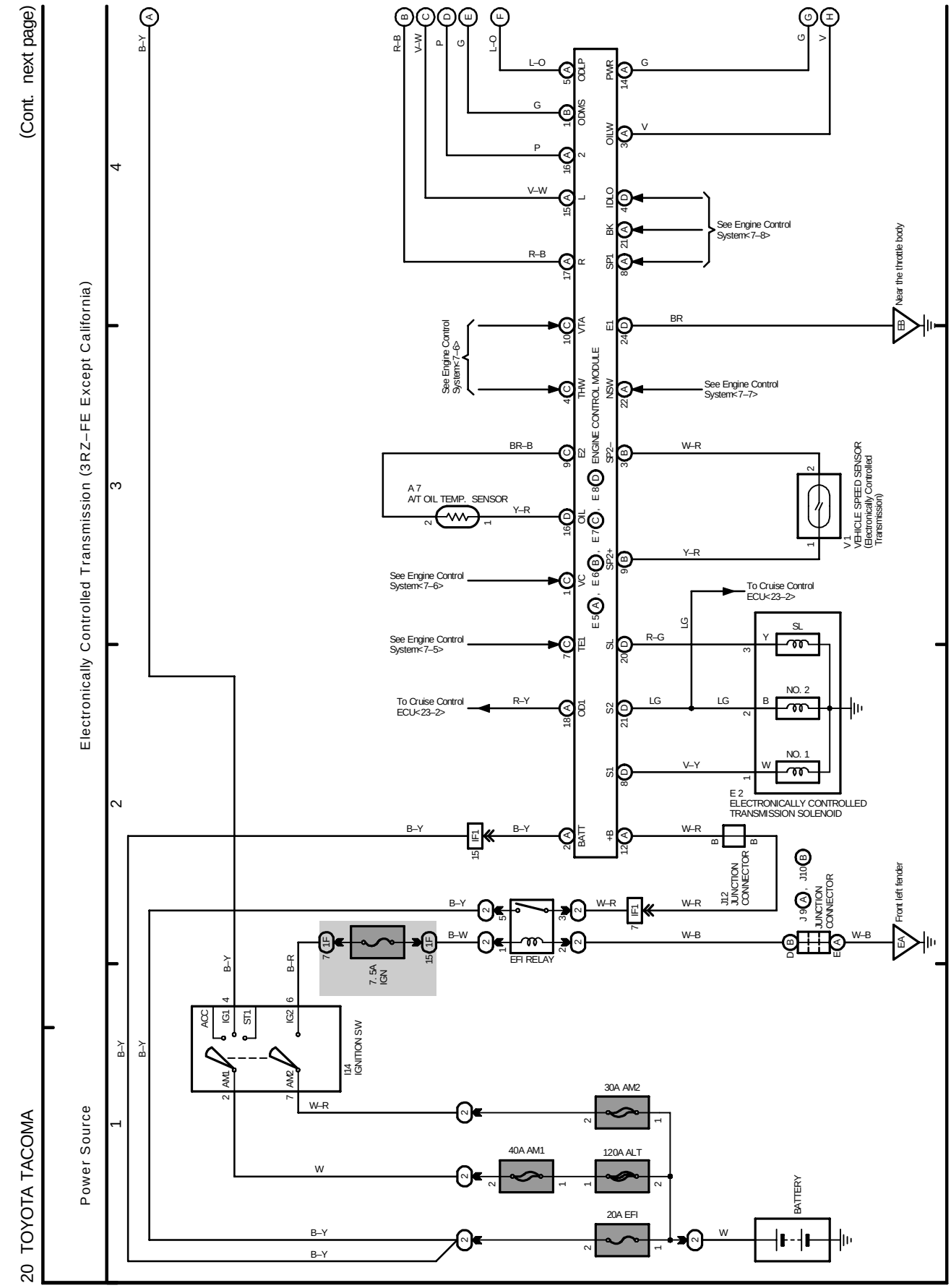

Electronically Controlled Transmission (3RZ–FE Except California)

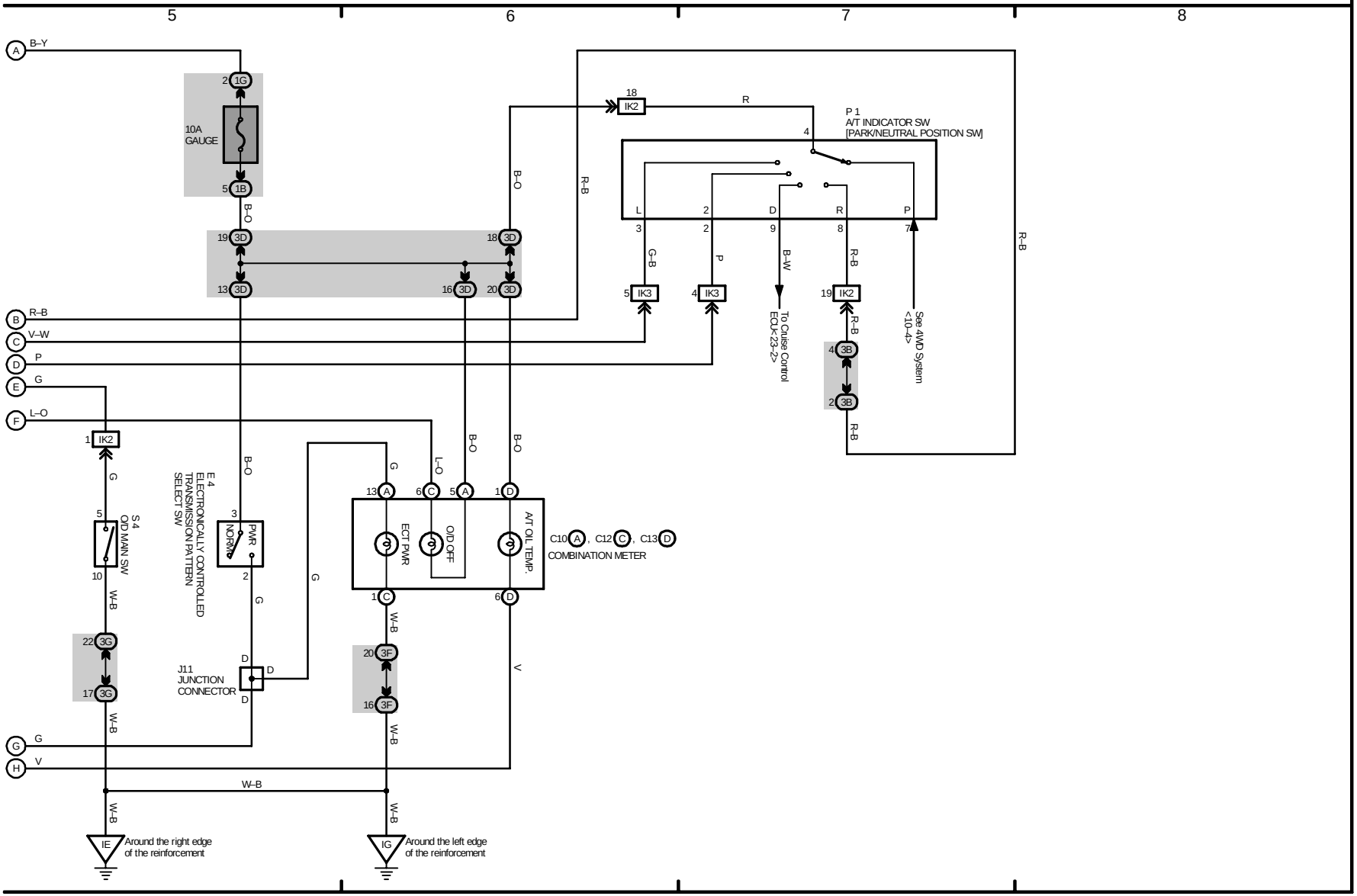

M

M OVERALL ELECTRICAL WIRING DIAGRAM

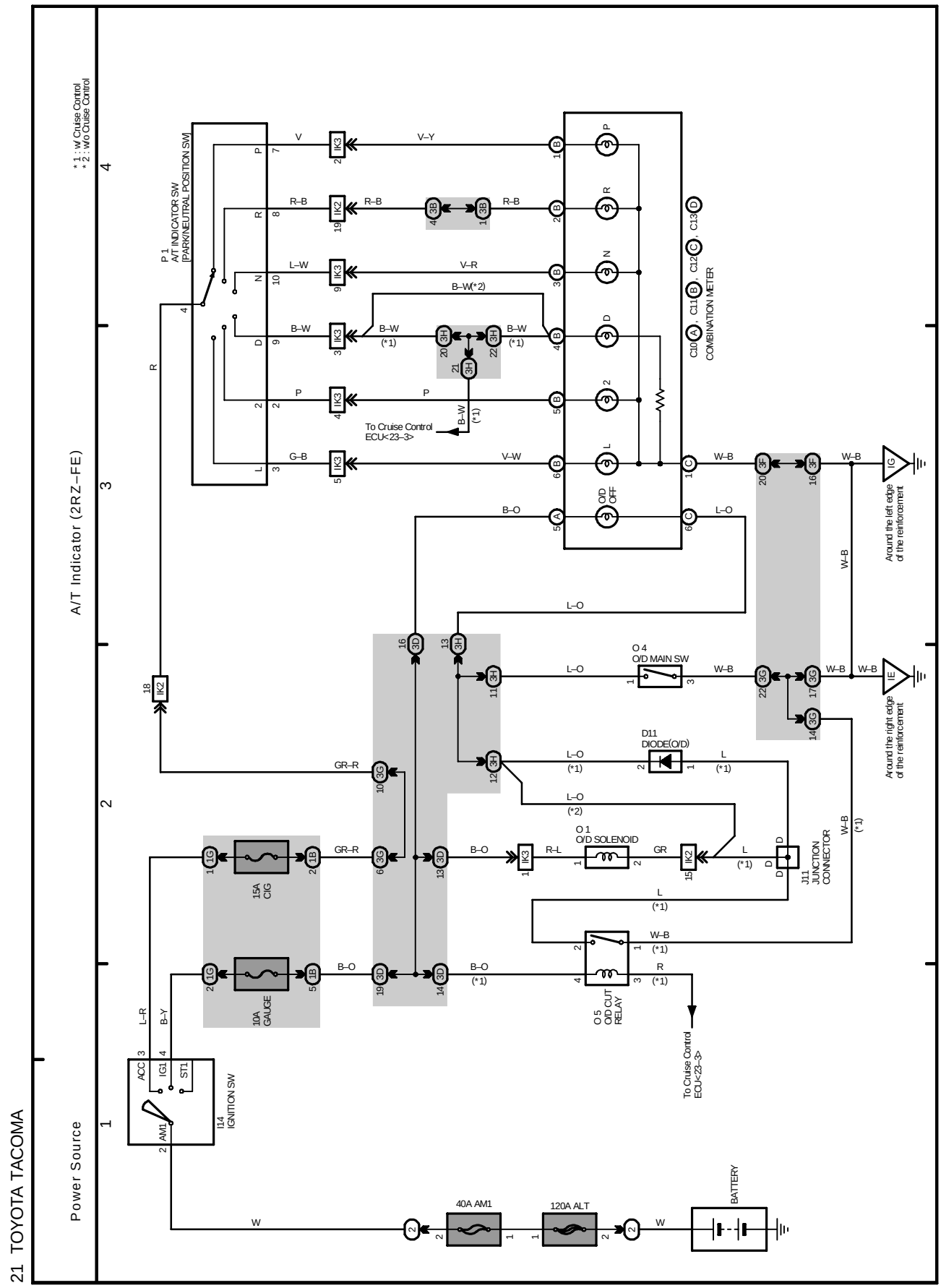

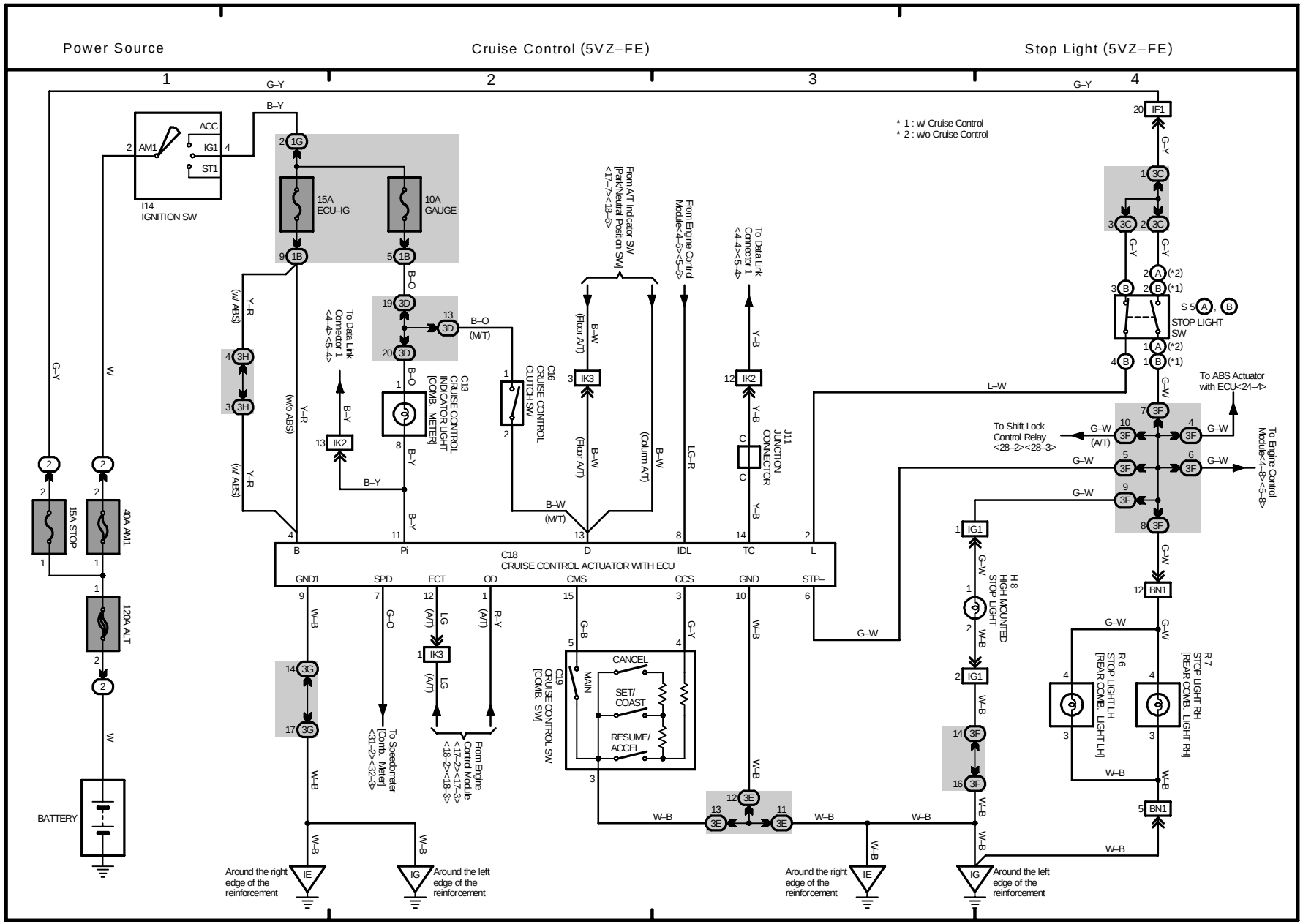
Power Source
Cruise Control (5VZ–FE)
Stop Light (5VZ–FE)
* 1 : w/ Cruise Control
* 2 : w/o Cruise Control
I14 IGNITION SW
15A ECU–IG
10A GAUGE
15A STOP
40A AM1
120A ALT
BATTERY
STOP LIGHT SW
To ABS Actuator with ECU<24–4>
To Shift Lock Control Relay <28–2><28–3>
To Engine Control Module<4–8><5–8>
C13 CRUISE CONTROL INDICATOR LIGHT [COMB. METER]
C16 CRUISE CONTROL CLUTCH SW
C18 CRUISE CONTROL ACTUATOR WITH ECU
C19 CRUISE CONTROL SW [COMB. SW]
J11 JUNCTION CONNECTOR
H 8 HIGH MOUNTED STOP LIGHT
R 6 STOP LIGHT LH [REAR COMB. LIGHT LH]
R 7 STOP LIGHT RH [REAR COMB. LIGHT RH]
To Data Link Connector 1 <4–4><5–4>
From AT Indicator SW [Park/Neutral Position SW] <17–7><18–6>
From Engine Control Module<4–6><5–6>
To Data Link Connector 1 <4–4><5–4>
To Speedometer [Comb. Meter] <31–2><32–3>
From Engine Control Module <17–2><17–3> <18–2><18–3>
CANCEL
SET/ COAST
RESUME/ ACCEL
MAIN
Around the right edge of the reinforcement
Around the left edge of the reinforcement

M

M OVERALL ELECTRICAL WIRING DIAGRAM

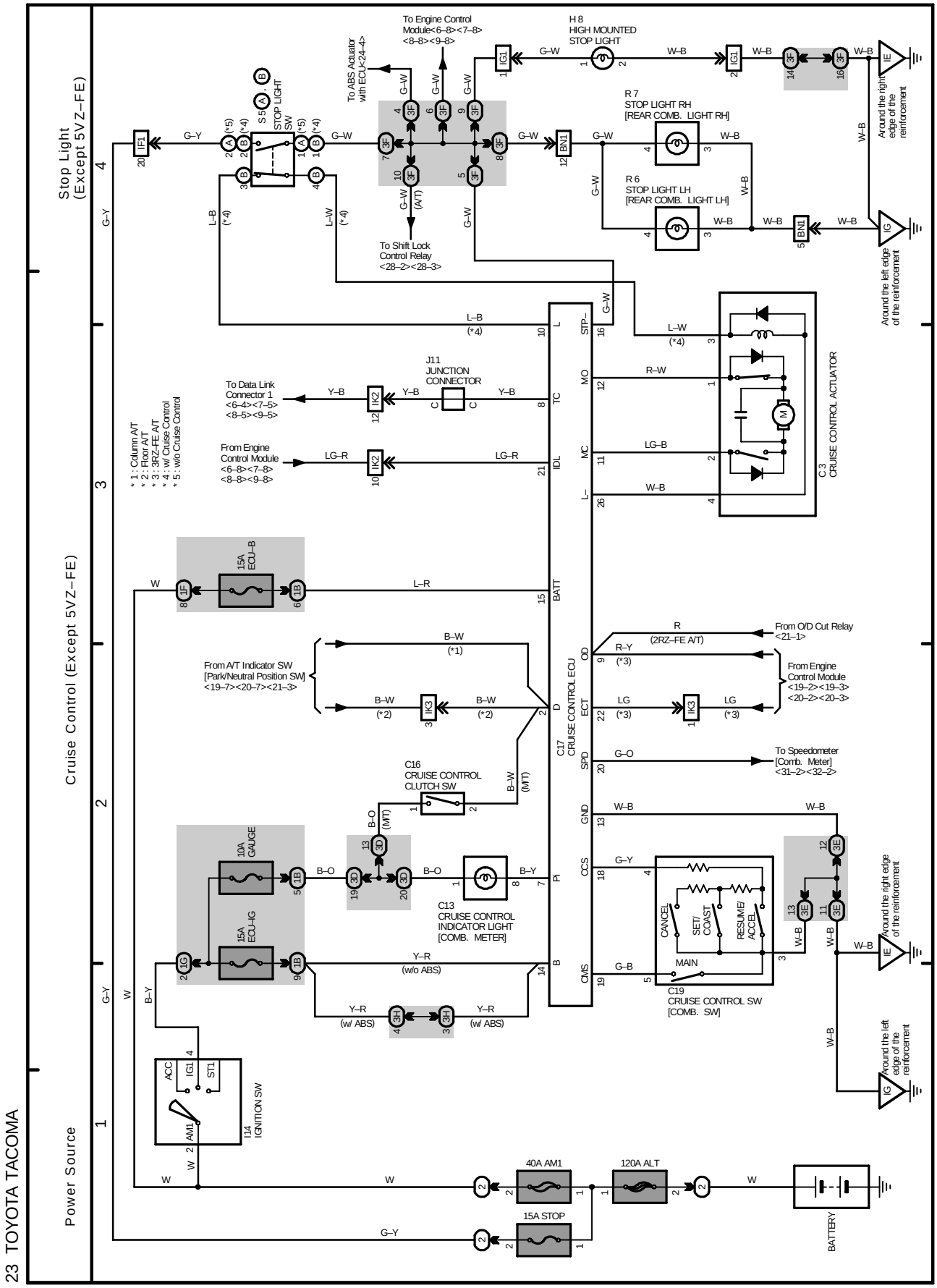

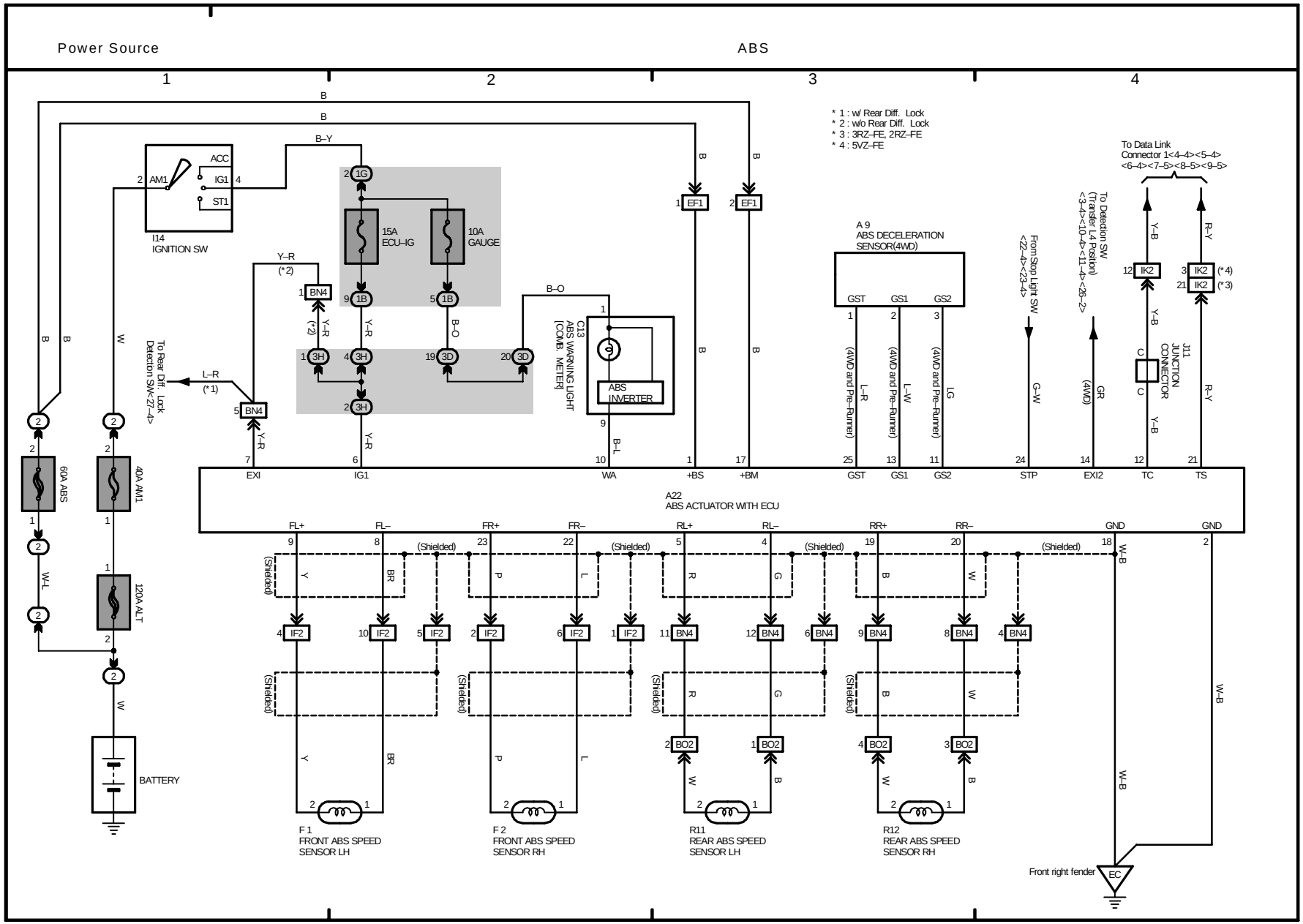
Power Source
ABS
1
2
3
4
* 1 : w/ Rear Diff. Lock
* 2 : w/o Rear Diff. Lock
* 3 : 3RZ–FE, 2RZ–FE
* 4 : 5VZ–FE
I14 IGNITION SW
ACC
IG1
ST1
AM1
15A ECU–IG
10A GAUGE
60A ABS
40A AM1
120A ALT
BATTERY
To Rear Diff. Lock Detection SW<27–4>
A 9 ABS DECELERATION SENSOR(4WD)
GST
GS1
GS2
(4WD and Pre–Runner)
From Stop Light SW <22–4><23–4>
To Detection SW (Transfer L4 Position) <3–4><10–4><11–4><26–2>
To Data Link Connector 1<4–4><5–4> <6–4><7–5><8–5><9–5>
J11 JUNCTION CONNECTOR
C13 ABS WARNING LIGHT [COMB. METER]
ABS INVERTER
A22 ABS ACTUATOR WITH ECU
EXI
IG1
WA
+BS
+BM
STP
EXI2
TC
TS
FL+
FL–
FR+
FR–
RL+
RL–
RR+
RR–
GND
(Shielded)
F 1 FRONT ABS SPEED SENSOR LH
F 2 FRONT ABS SPEED SENSOR RH
R11 REAR ABS SPEED SENSOR LH
R12 REAR ABS SPEED SENSOR RH
Front right fender
EC

M

M OVERALL ELECTRICAL WIRING DIAGRAM

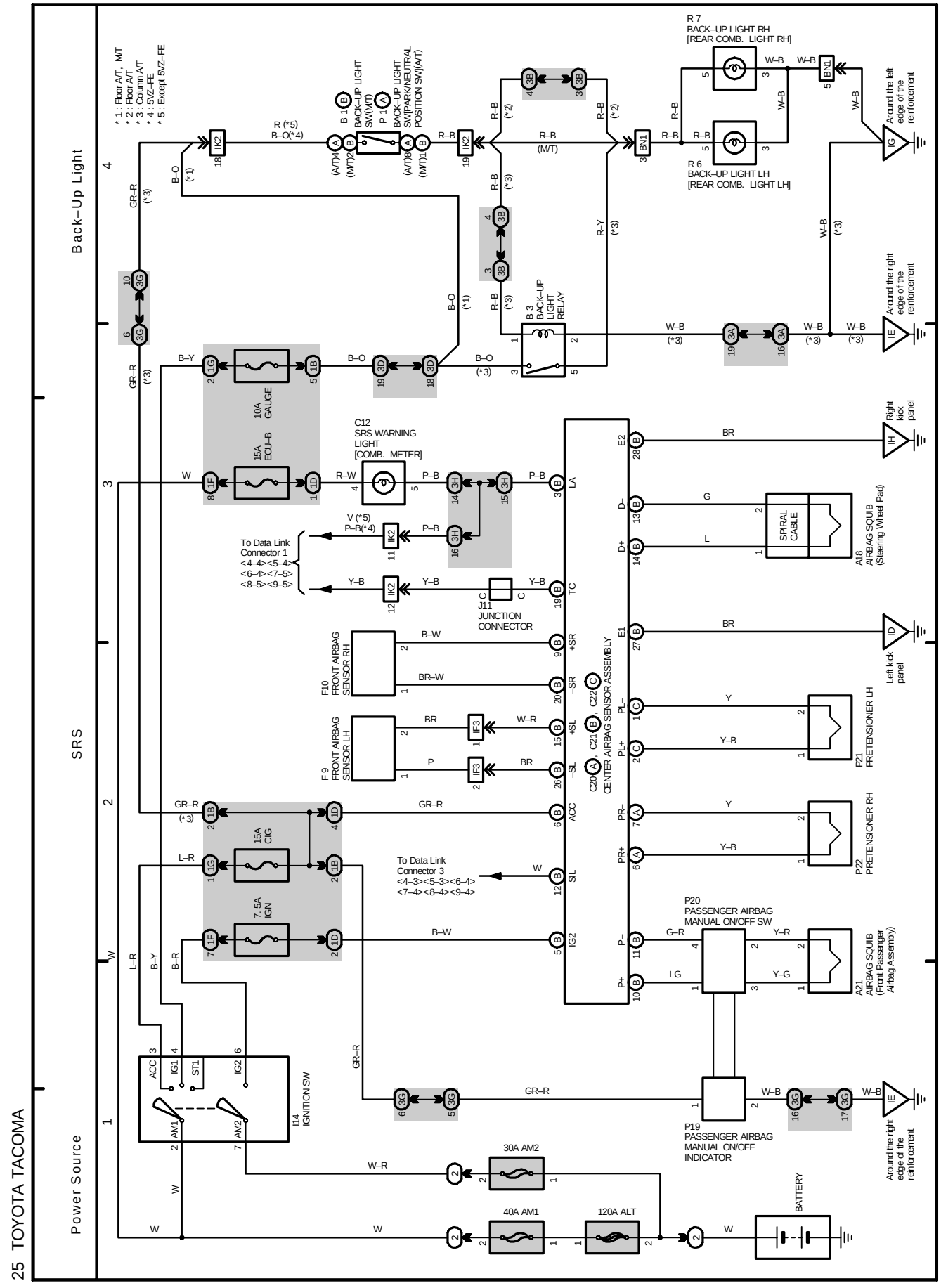

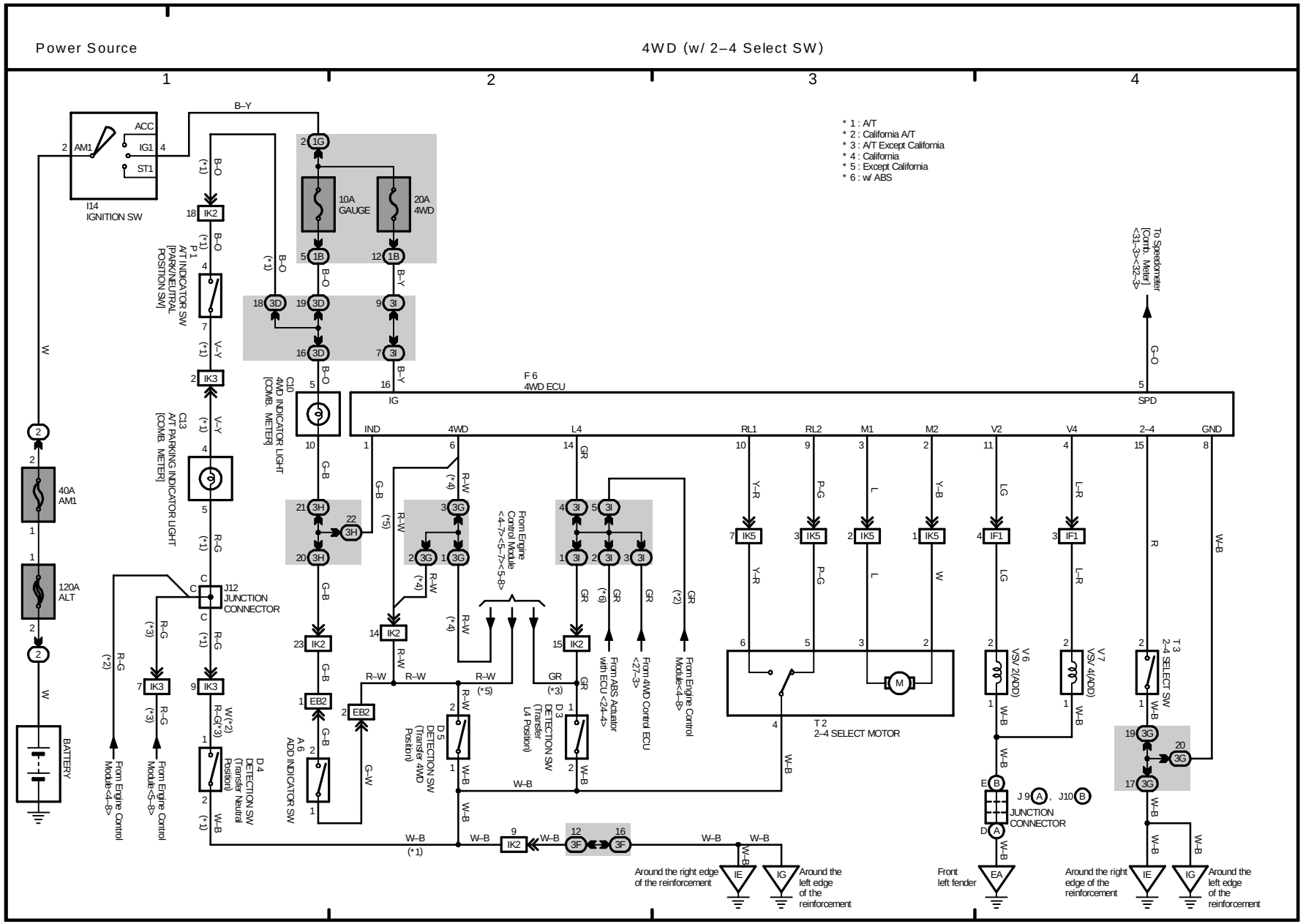
Power Source
4WD (w/ 2–4 Select SW)
1
2
3
4
* 1 : A/T
* 2 : California A/T
* 3 : A/T Except California
* 4 : California
* 5 : Except California
* 6 : w/ ABS
I14 IGNITION SW
ACC
IG1
ST1
AM1
10A GAUGE
20A 4WD
40A AM1
120A ALT
BATTERY
P1 A/T INDICATOR SW [PARK/NEUTRAL POSITION SW]
C13 A/T PARKING INDICATOR LIGHT [COMB. METER]
C10 4WD INDICATOR LIGHT [COMB. METER]
J12 JUNCTION CONNECTOR
F 6 4WD ECU
IND
4WD
L4
RL1
RL2
M1
M2
V2
V4
2–4
GND
IG
SPD
To Speedometer [Comb. Meter] <31–3><32–3>
From Engine Control Module<4–8>
From Engine Control Module<5–8>
From Engine Control Module<4–7><5–7><5–8>
From ABS Actuator with ECU <24–4>
From 4WD Control ECU <27–3>
From Engine Control Module<4–8>
T 2 2–4 SELECT MOTOR
V6 VSV 2(ADD)
V7 VSV 4(ADD)
T 3 2–4 SELECT SW
A 6 ADD INDICATOR SW
D 4 DETECTION SW (Transfer Neutral Position)
D 5 DETECTION SW (Transfer 4WD Position)
D 3 DETECTION SW (Transfer L4 Position)
JUNCTION CONNECTOR
J 9 , J10
Around the right edge of the reinforcement
Around the left edge of the reinforcement
Front left fender
Around the right edge of the reinforcement
Around the left edge of the reinforcement

M OVERALL ELECTRICAL WIRING DIAGRAM

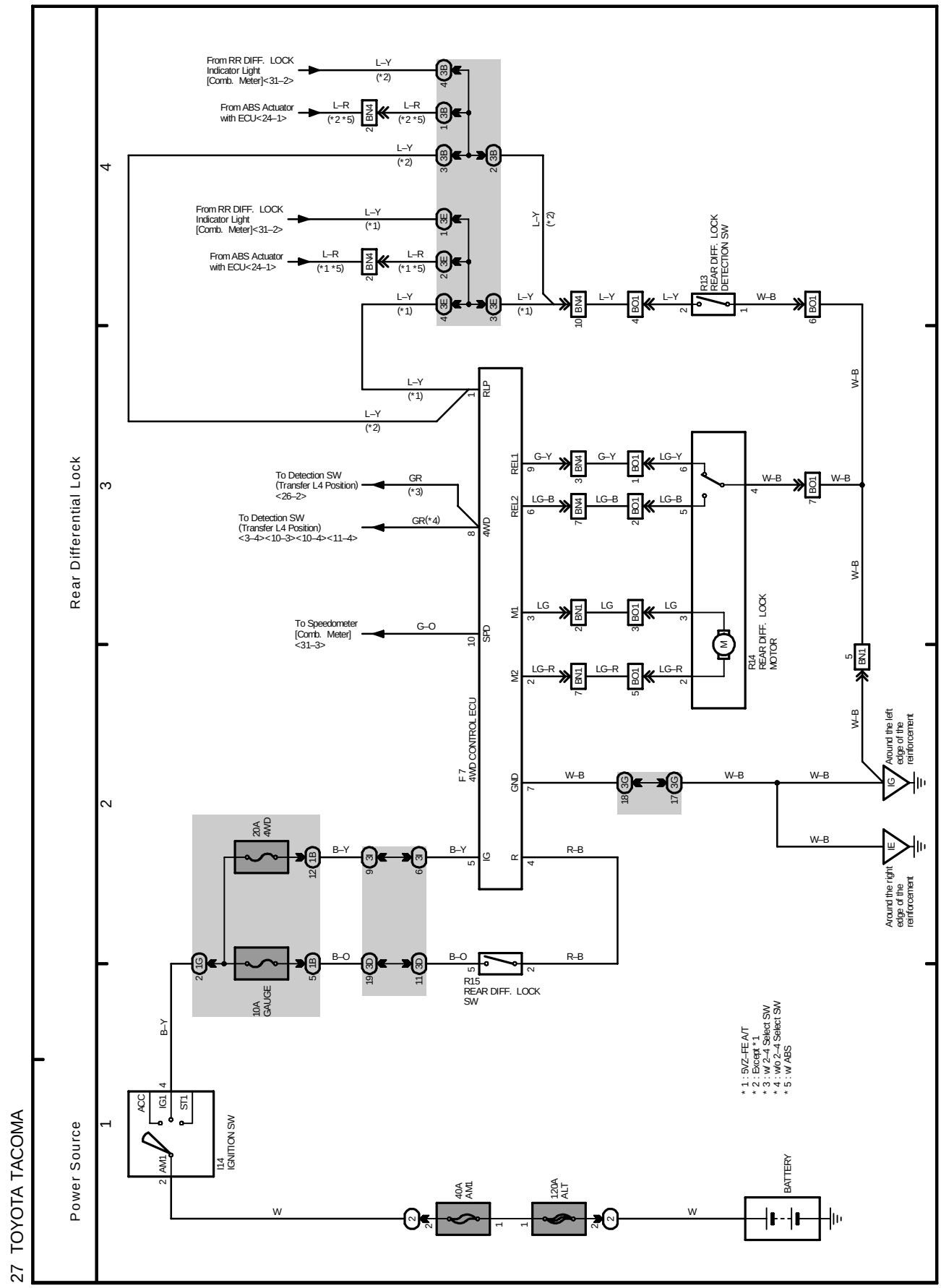

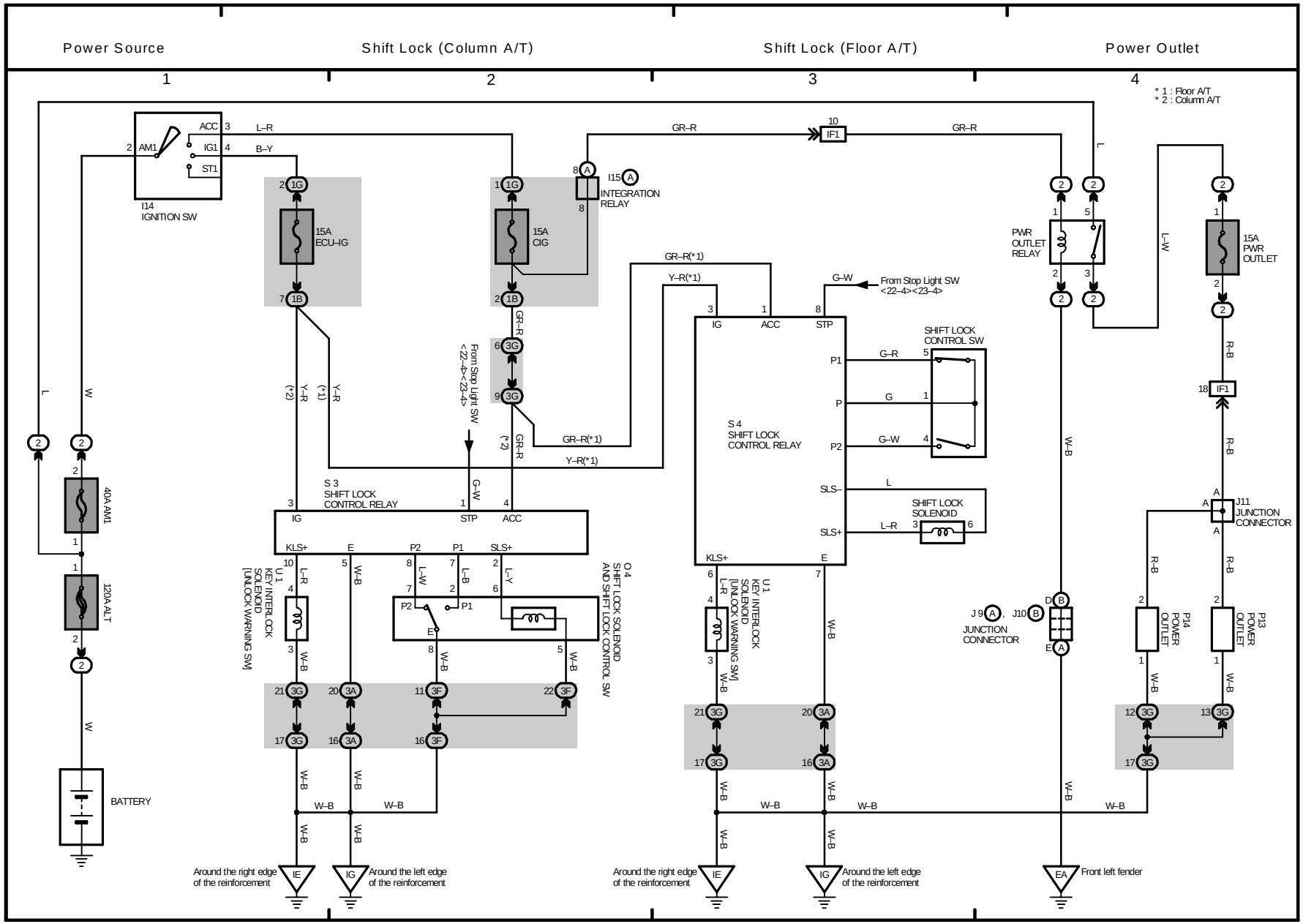
Power Source
Shift Lock (Column A/T)
Shift Lock (Floor A/T)
Power Outlet
1
2
3
4
* 1 : Floor A/T
* 2 : Column A/T
I14
IGNITION SW
ACC
IG1
ST1
AM1
L–R
B–Y
GR–R
I15
INTEGRATION RELAY
IF1
15A ECU–IG
15A CIG
15A PWR OUTLET
PWR OUTLET RELAY
L–W
GR–R(*1)
Y–R(*1)
G–W
From Stop Light SW <22–4><23–4>
Y–R (*2)
Y–R (*1)
S 3
SHIFT LOCK CONTROL RELAY
S 4
SHIFT LOCK CONTROL RELAY
SHIFT LOCK CONTROL SW
SHIFT LOCK SOLENOID
P1
P
P2
SLS–
SLS+
IG
STP
ACC
KLS+
E
U 1
KEY INTERLOCK SOLENOID [UNLOCK WARNING SW]
O 4
SHIFT LOCK SOLENOID AND SHIFT LOCK CONTROL SW
J11
JUNCTION CONNECTOR
J9
J10
P14
POWER OUTLET
P13
POWER OUTLET
R–B
W–B
L
W
40A AM1
120A ALT
BATTERY
Around the right edge of the reinforcement
Around the left edge of the reinforcement
Front left fender
IE
IG
EA

M

M OVERALL ELECTRICAL WIRING DIAGRAM

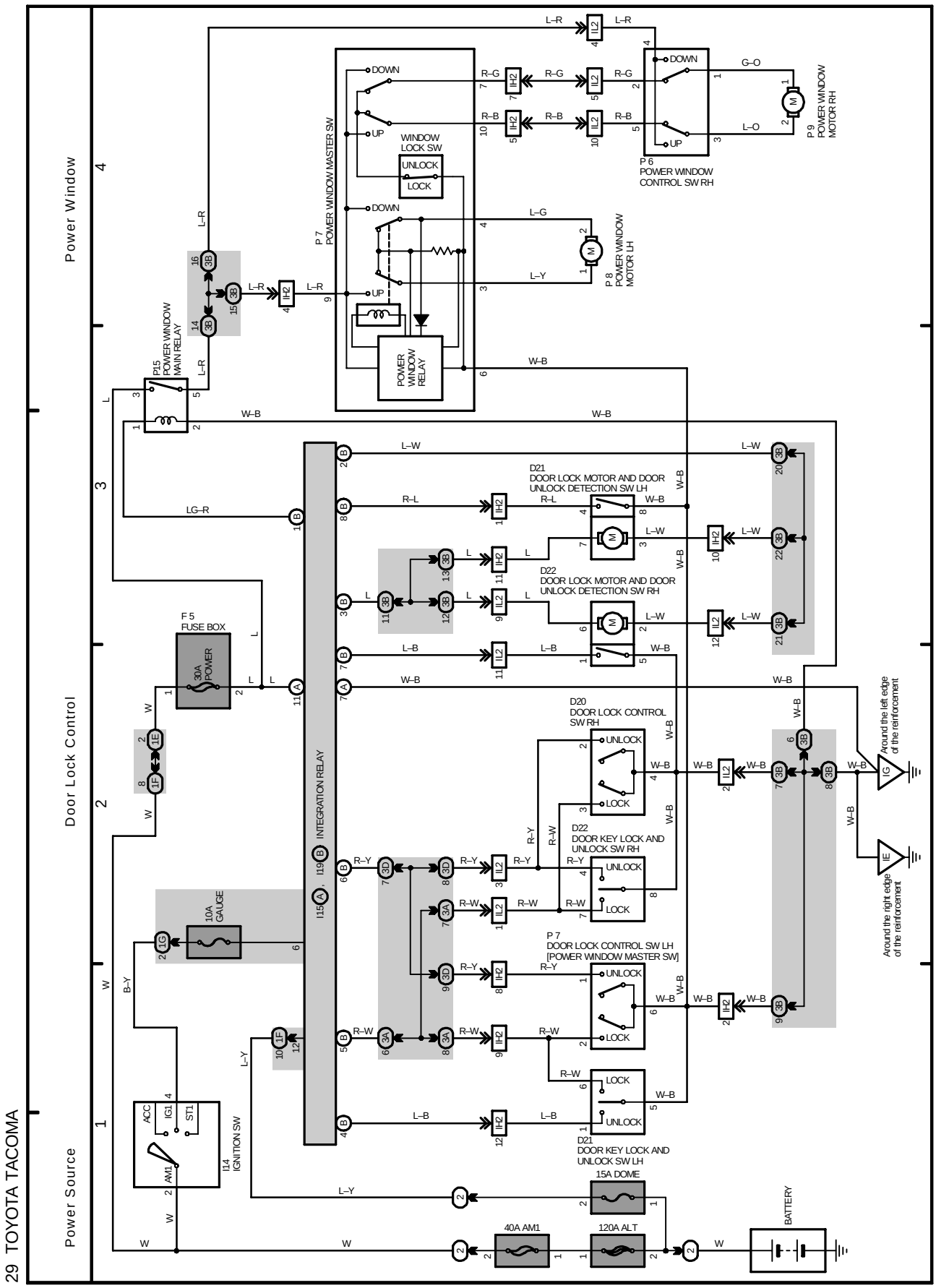

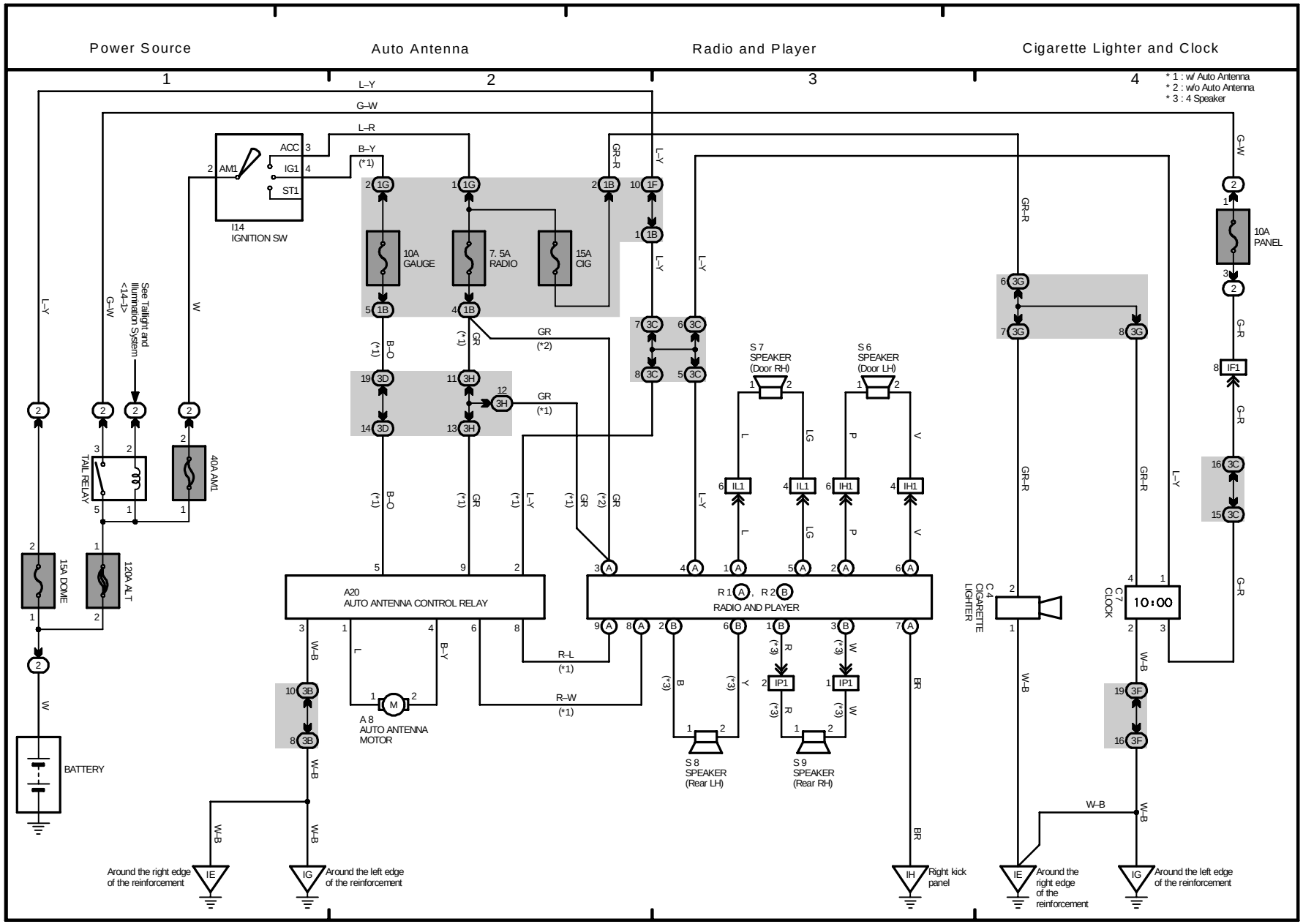
Power Source
Auto Antenna
Radio and Player
Cigarette Lighter and Clock
1
2
3
4
* 1 : w/ Auto Antenna
* 2 : w/o Auto Antenna
* 3 : 4 Speaker
L–Y
G–W
L–R
B–Y
(*1)
GR–R
ACC
IG1
ST1
AM1
I14
IGNITION SW
10A GAUGE
7. 5A RADIO
15A CIG
10A PANEL
See Taillight and Illumination System <14–1>
TAIL RELAY
40A AM1
15A DOME
120A ALT
BATTERY
B–O
GR
(*2)
S 7 SPEAKER (Door RH)
S 6 SPEAKER (Door LH)
L
LG
P
V
A20
AUTO ANTENNA CONTROL RELAY
R 1 , R 2
RADIO AND PLAYER
W–B
B–Y
R–L
R–W
A 8
AUTO ANTENNA MOTOR
S 8 SPEAKER (Rear LH)
S 9 SPEAKER (Rear RH)
R
W
B
Y
BR
C 4
CIGARETTE LIGHTER
C 7
CLOCK
10:00
IF1
Around the right edge of the reinforcement
Around the left edge of the reinforcement
Right kick panel
Around the right edge of the reinforcement
Around the left edge of the reinforcement

M

M OVERALL ELECTRICAL WIRING DIAGRAM

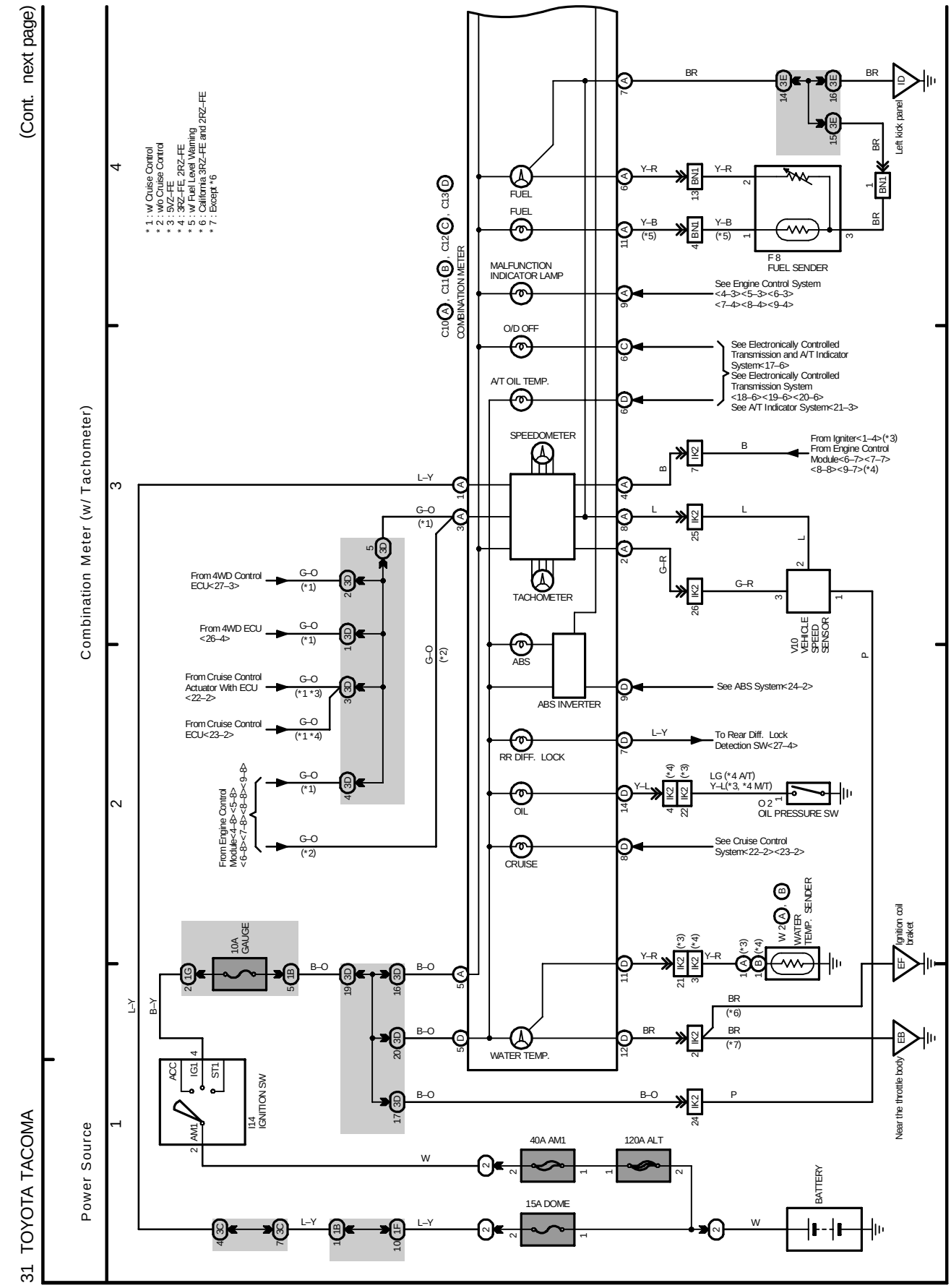

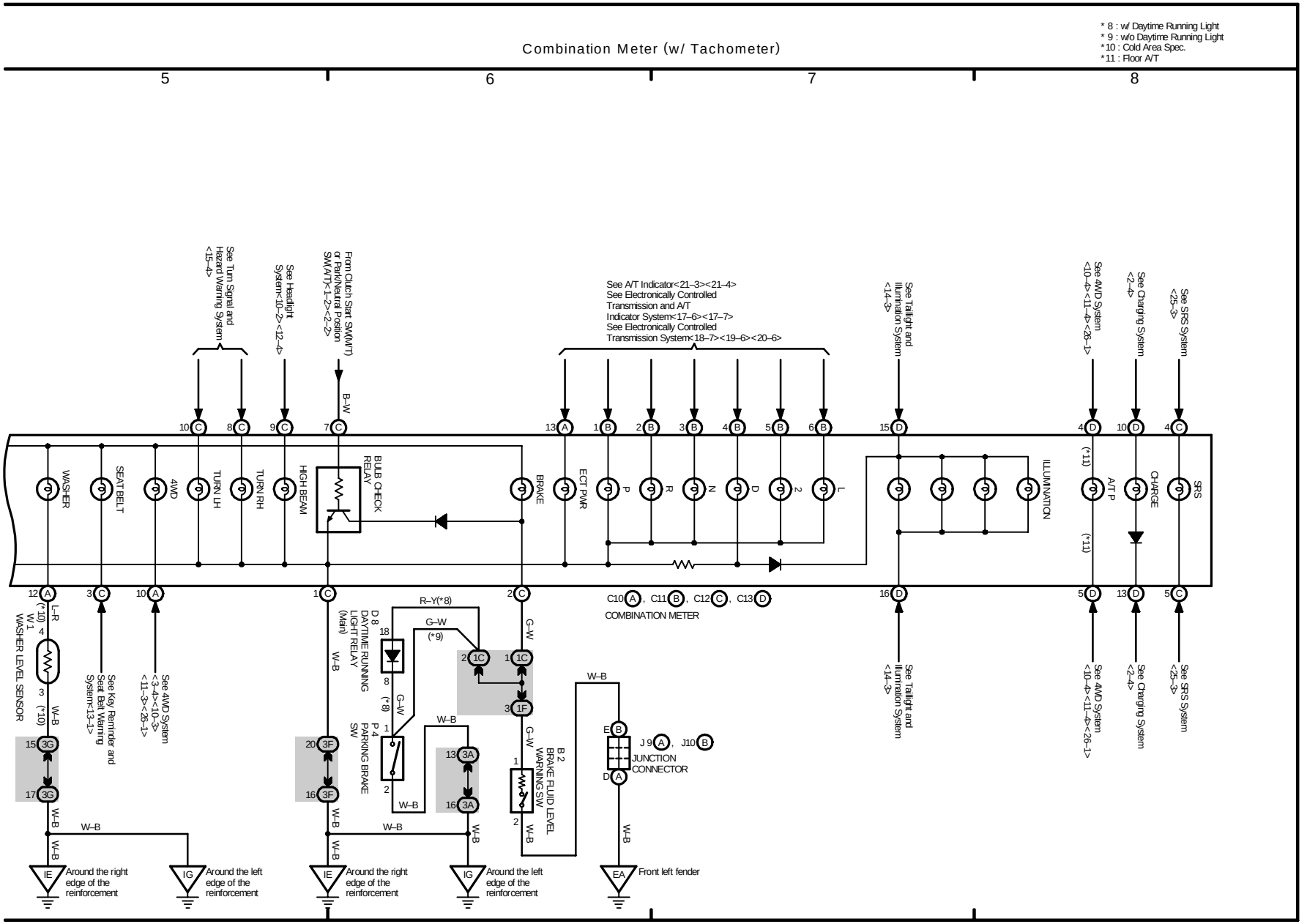
* 8 : w/ Daytime Running Light
* 9 : w/o Daytime Running Light
*10 : Cold Area Spec.
*11 : Floor A/T
Combination Meter (w/ Tachometer)
5
6
7
8
See Turn Signal and Hazard Warning System <15–4>
See Headlight System<10–2><12–4>
From Clutch Start SW(M/T) or Park/Neutral Position SW(A/T)<1–2><2–2>
B–W
See A/T Indicator<21–3><21–4>
See Electronically Controlled Transmission and A/T Indicator System<17–6><17–7>
See Electronically Controlled Transmission System<18–7><19–6><20–6>
See Taillight and Illumination System <14–3>
See 4WD System <10–4><11–4><26–1>
See Charging System <2–4>
See SRS System <25–3>
WASHER
SEAT BELT
4WD
TURN LH
TURN RH
HIGH BEAM
BULB CHECK RELAY
BRAKE
ECT PWR
P
R
N
D
2
L
ILLUMINATION
A/T P
CHARGE
SRS
L–R
W 1
WASHER LEVEL SENSOR
W–B
See Key Reminder and Seat Belt Warning System<13–1>
See 4WD System <3–4><10–3><11–3><26–1>
D 8
DAYTIME RUNNING LIGHT RELAY (Main)
R–Y(*8)
G–W
(*9)
P 4
PARKING BRAKE SW
B 2
BRAKE FLUID LEVEL WARNING SW
C10 A, C11 B, C12 C, C13 D
COMBINATION METER
J 9 A, J10 B
JUNCTION CONNECTOR
IE
Around the right edge of the reinforcement
IG
Around the left edge of the reinforcement
EA
Front left fender

M

M OVERALL ELECTRICAL WIRING DIAGRAM

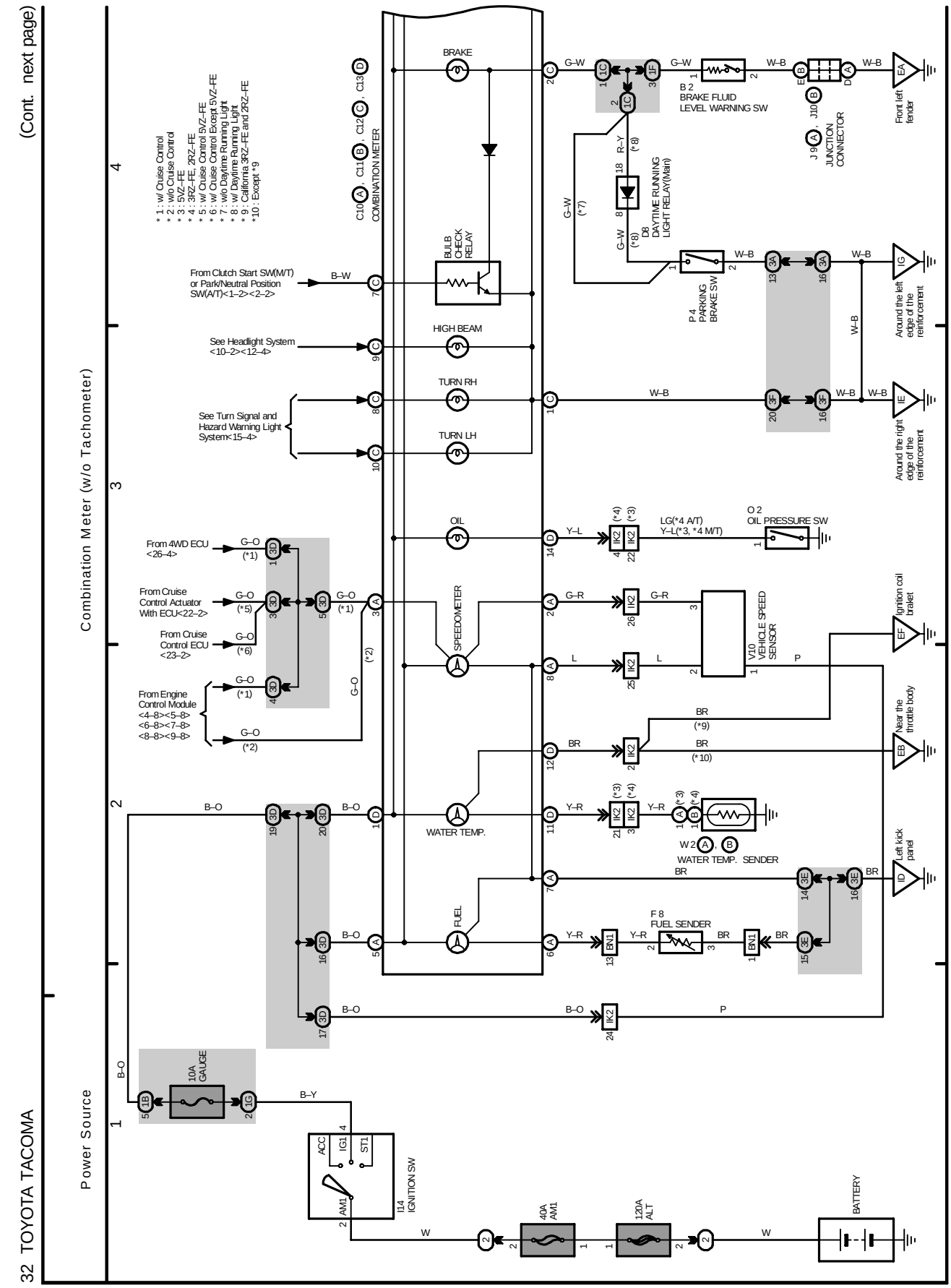

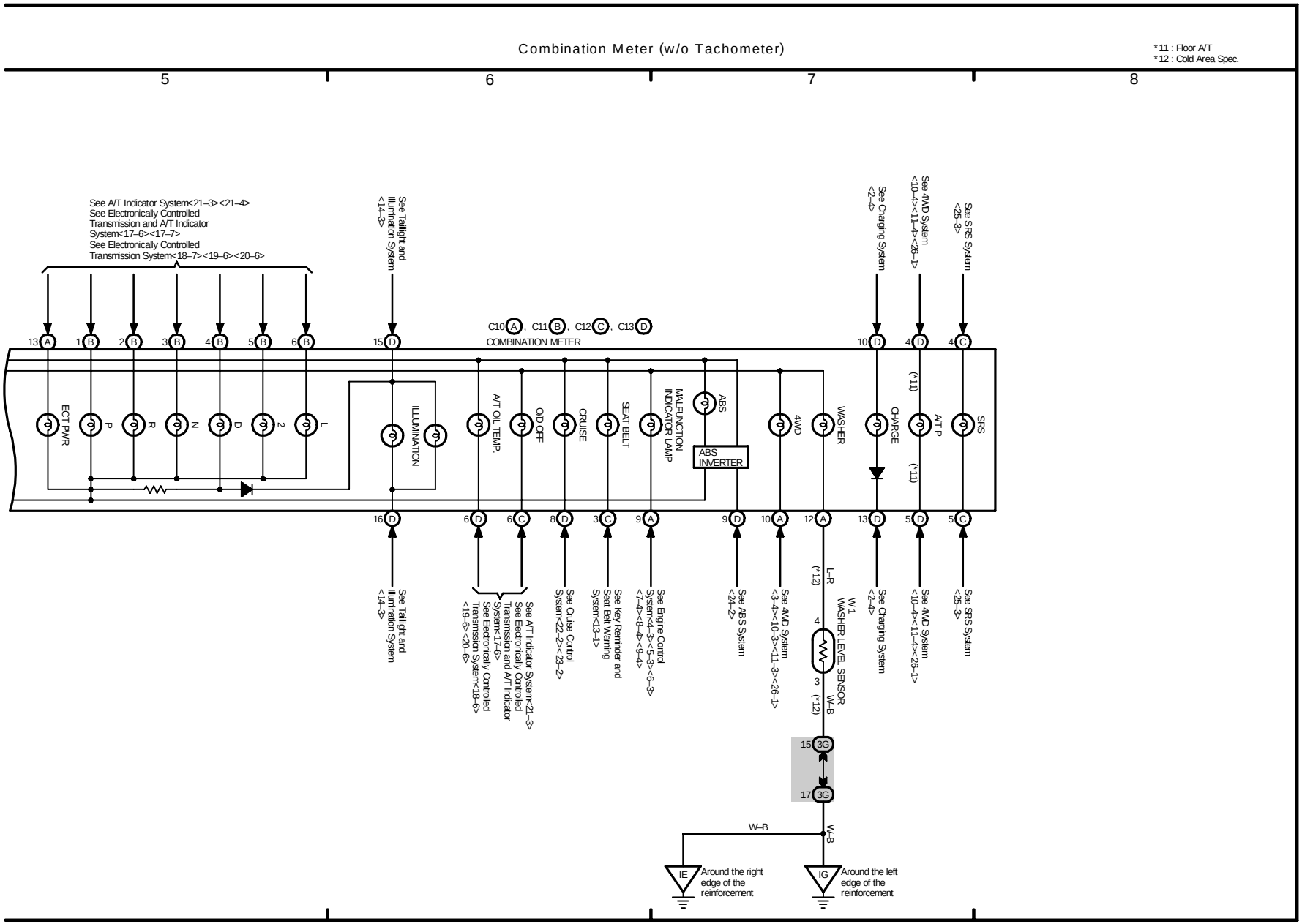
Combination Meter (w/o Tachometer)
*11 : Floor A/T
*12 : Cold Area Spec.
5
6
7
8
See A/T Indicator System<21–3><21–4>
See Electronically Controlled Transmission and A/T Indicator System<17–6><17–7>
See Electronically Controlled Transmission System<18–7><19–6><20–6>
See Taillight and Illumination System <14–3>
See Charging System <2–4>
See 4WD System <10–4><11–4><26–1>
See SRS System <25–3>
C10 (A), C11 (B), C12 (C), C13 (D)
COMBINATION METER
13 (A)
1 (B)
2 (B)
3 (B)
4 (B)
5 (B)
6 (B)
15 (D)
10 (D)
4 (D)
4 (C)
ECT PWR
P
R
N
D
2
L
ILLUMINATION
A/T OIL TEMP.
O/D OFF
CRUISE
SEAT BELT
MALFUNCTION INDICATOR LAMP
ABS
ABS INVERTER
4WD
WASHER
CHARGE
(*11)
A/T P
(*11)
SRS
16 (D)
6 (D)
6 (C)
8 (D)
3 (C)
9 (A)
9 (D)
10 (A)
12 (A)
13 (D)
5 (D)
5 (C)
See Taillight and Illumination System <14–3>
See A/T Indicator System<21–3> See Electronically Controlled Transmission and A/T Indicator System<17–6> See Electronically Controlled Transmission System<19–6><20–6>
See Cruise Control System<22–2><23–2>
See Key Reminder and Seat Belt Warning System<13–1>
See Engine Control System<4–2><5–3><6–3><7–4><8–4><9–4>
See ABS System <24–2>
See 4WD System <3–4><10–3><11–3><26–1>
L–R
(*12)
4
3
(*12)
W–B
W1
WASHER LEVEL SENSOR
See Charging System <2–4>
See 4WD System <10–4><11–4><26–1>
See SRS System <25–3>
15 3G
17 3G
W–B
W–B
IE
Around the right edge of the reinforcement
IG
Around the left edge of the reinforcement

M

M OVERALL ELECTRICAL WIRING DIAGRAM

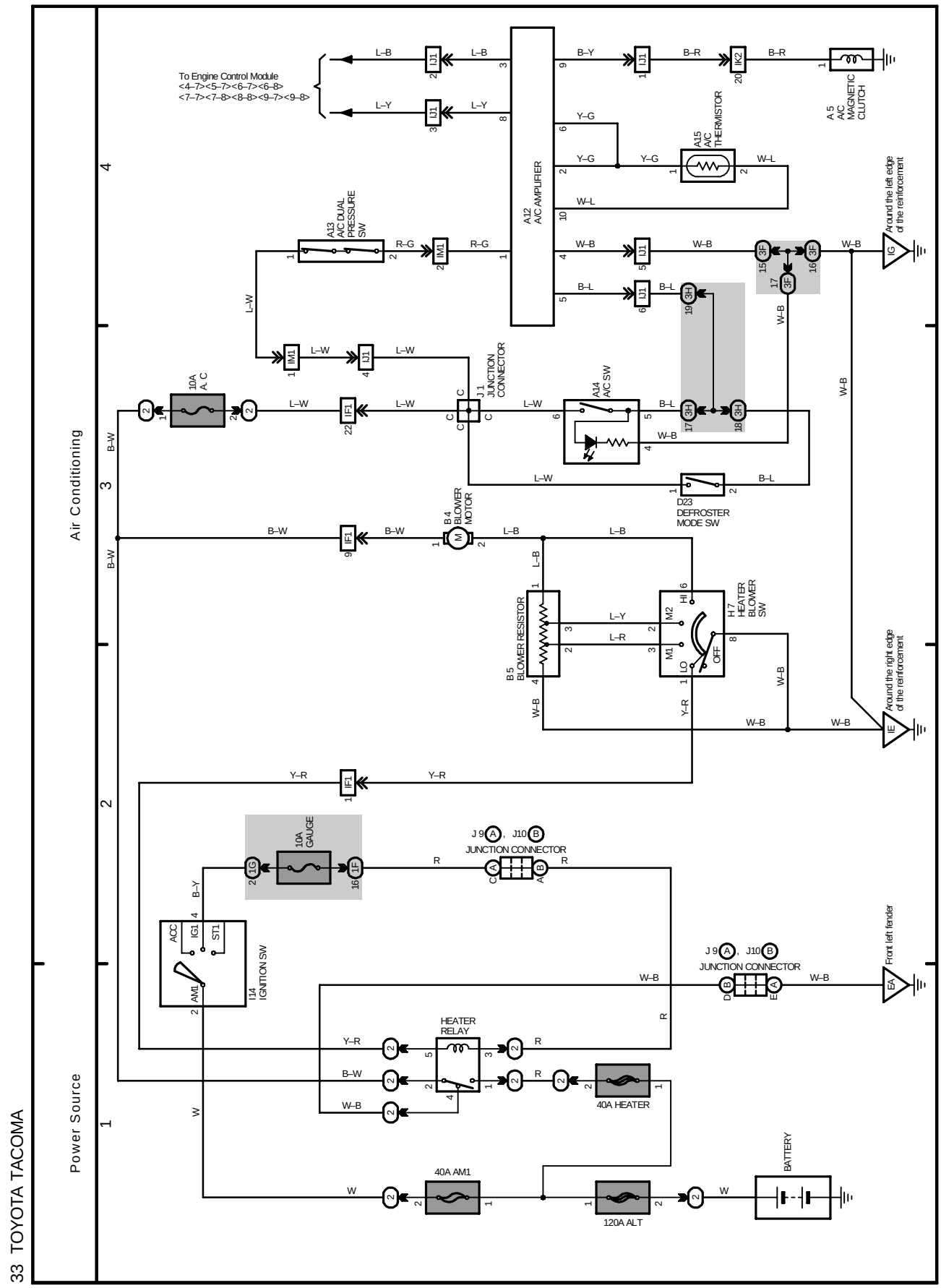

M OVERALL ELECTRICAL WIRING DIAGRAM

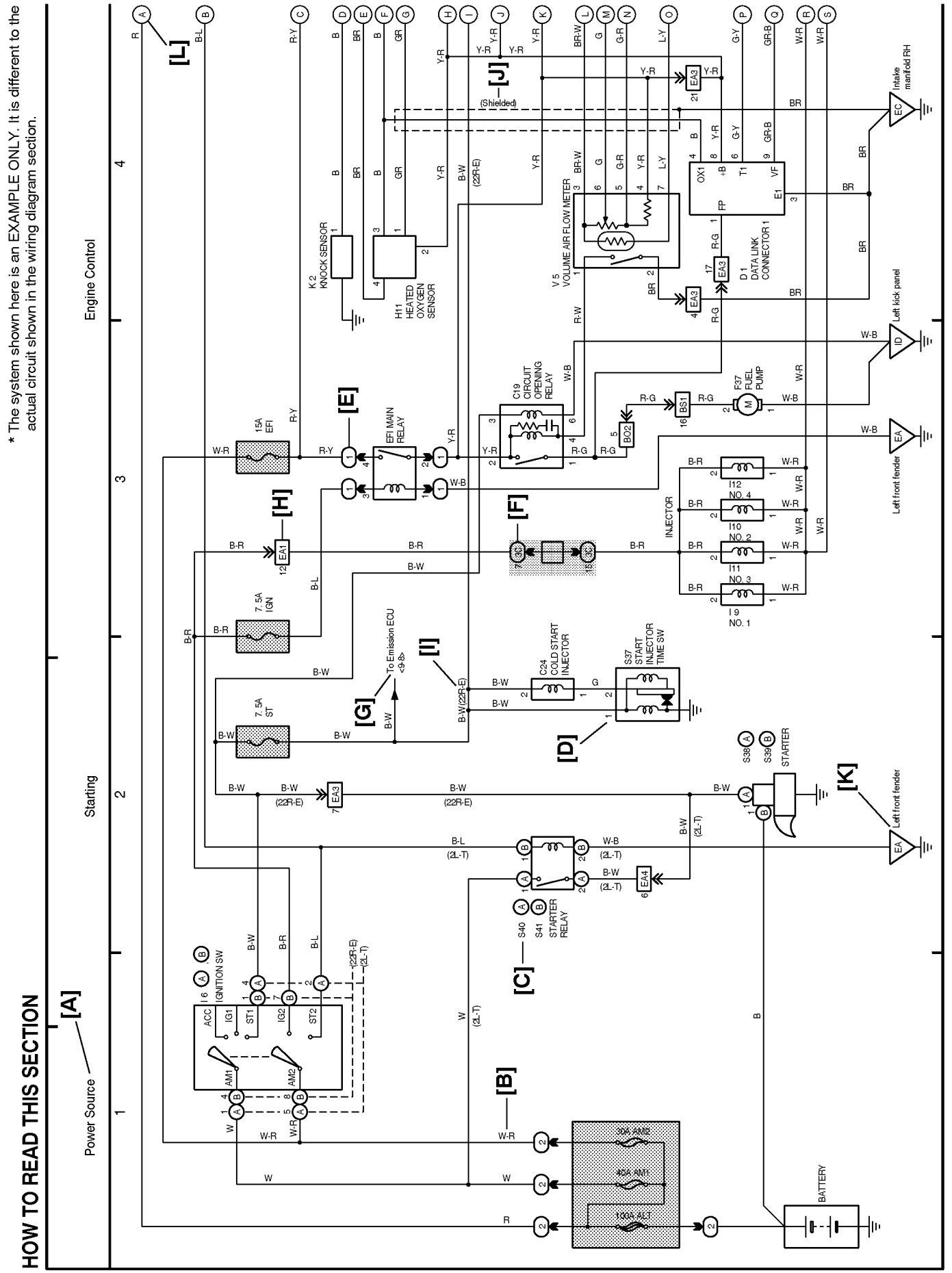

[A] : System Title

[B] : Indicates the wiring color.

Wire colors are indicated by an alphabetical code.

B	= Black	W	= White	BR	= Brown
L	= Blue	V	= Violet	SB	= Sky Blue
R	= Red	O	= Orange	LG	= Light Green
P	= Pink	Y	= Yellow	GR	= Gray
G	= Green				

The first letter indicates the basic wire color and the second letter indicates the color of the stripe.

Example: L – Y

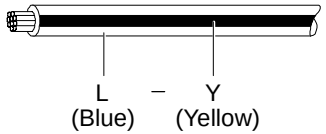

[C] : The position of the parts is the same as shown in the wiring diagram and wire routing.

[D] : Indicates the pin number of the connector. The numbering system is different for female and male connectors.

Example : Numbered in order from upper left to lower right

Numbered in order from upper right to lower left

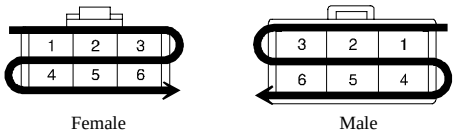

The numbering system for the overall wiring diagram is the same as above

[E] : Indicates a Relay Block. No shading is used and only the Relay Block No. is shown to distinguish it from the J/B.

Example : (1) Indicates Relay Block No.1

[F] : Junction Block (The number in the circle is the J/B No. and the connector code is shown beside it). Junction Blocks are shaded to clearly separate them from other parts.

Example:

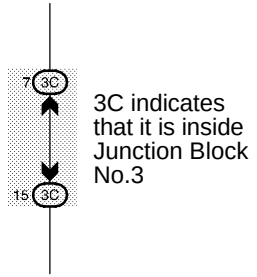

[G] : Indicates related system.

[H] : Indicates the wiring harness and wiring harness connector. The wiring harness with male terminal is shown with arrows (»). Outside numerals are pin numbers.

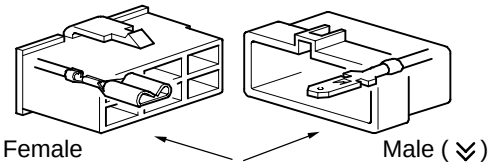

[I] : ( ) is used to indicate different wiring and connector, etc. when the vehicle model, engine type, or specification is different.

[J] : Indicates a shielded cable.



[K] : Indicates and located on ground point.

[L] : The same code occuring on the next page indicates that the wire harness is continuous.

M

SYSTEM INDEX

SYSTEMS	LOCATION
ABS	24–2
Air Conditioning	33–2
A/T Indicator (2RZ–FE)	21–2
Auto Antenna	30–2
Back–Up Light	25–4
Charging	2–4
Cigarette Lighter and Clock	30–4
Combination Meter (w/ Tachometer)	31–2
Combination Meter (w/o Tachometer)	32–2
Cruise Control (5VZ–FE)	22–2
Cruise Control (Except 5VZ–FE)	23–2
Door Lock Control	29–2
Electronically Controlled Transmission (3RZ–FE Except California)	20–2
Electronically Controlled Transmission (5VZ–FE Except California)	18–2
Electronically Controlled Transmission (California 3RZ–FE)	19–2
Electronically Controlled Transmission and A/T Indicator (California 5VZ–FE)	17–2
Engine Control (2RZ–FE Except California)	9–2
Engine Control (3RZ–FE Except California)	7–2
Engine Control (5VZ–FE Except California)	5–2
Engine Control (California 2RZ–FE)	8–2
Engine Control (California 3RZ–FE)	6–2
Engine Control (California 5VZ–FE)	4–2
Headlight (w/ Daytime Running Light)	12–2
Headlight (w/o Daytime Running Light)	10–2
Horn	15–4
Ignition (2RZ–FE Except California)	9–2
Ignition (3RZ–FE Except California)	7–2
Ignition (5VZ–FE)	1–4
Ignition (California 2RZ–FE and 3RZ–FE)	3–2
Interior Light	13–3
Key Reminder and Belt Warning	13–2
Light Reminder	16–4
Power Outlet	28–4
Power Source	1~33–1
Power Window	29–4
Radio and Player	30–3
Rear Differential Lock	27–2
Remote Control Mirror	16–3
Shift Lock (Column A/T)	28–2
Shift Lock (Floor A/T)	28–3
SRS	25–2
Starting (3RZ–FE, 2RZ–FE)	2–2
Starting (5VZ–FE)	1–2
Stop Light (5VZ–FE)	22–4
Stop Light (Except 5VZ–FE)	23–4
Taillight and Illumination	14–2
Turn Signal and Hazard Warning Light	15–2
Wiper and Washer	16–2
4WD (California A/T w/o 2–4 Select SW)	11–2
4WD (California M/T w/o 2–4 Select SW)	3–3
4WD (w/ 2–4 Select SW)	26–2
4WD (w/o 2–4 Select SW Except California)	10–2

Position of Parts in Engine Compartment

[5VZ–FE]

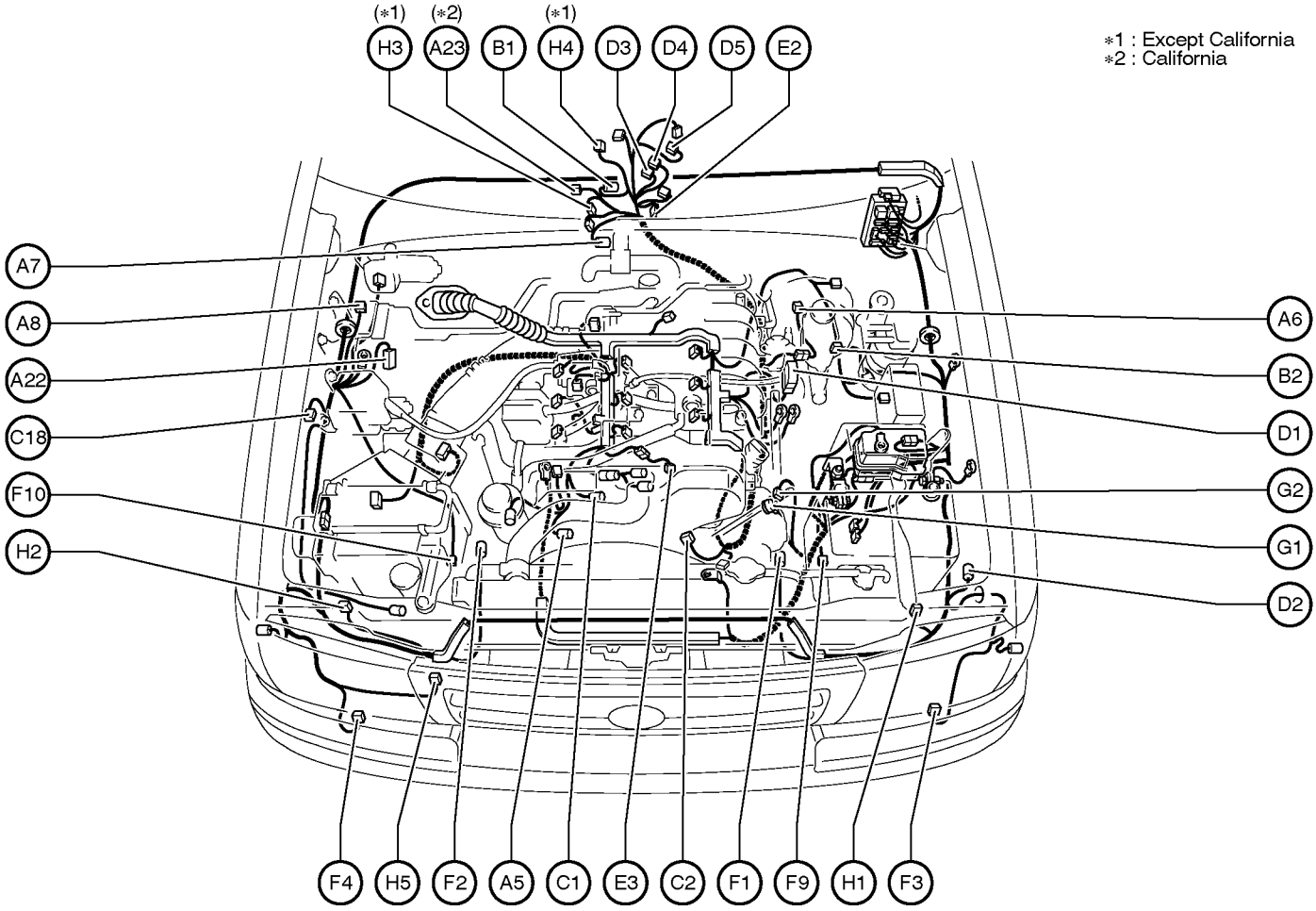

A 5 A/C Magnetic Clutch
A 6 ADD Indicator SW
A 7 A/T Oil Temp. Sensor
A 8 Auto Antenna Motor
A22 ABS Actuator with ECU
A23 Air Fuel Ratio Sensor (Bank 1 Sensor 1) (*2)

B 1 Back–Up Light SW
B 2 Brake Fluid Level Warning SW

C 1 Camshaft Position Sensor
C 2 Crankshaft Position Sensor
C18 Cruise Control Actuator with ECU

D 1 Data Link Connector 1
D 2 Daytime Running Light Resistor
D 3 Detection SW (Transfer L4 Position)
D 4 Detection SW (Transfer Neutral Position)
D 5 Detection SW (Transfer 4WD Position)

E 2 Electronically Controlled Transmission Solenoid
E 3 Engine Coolant Temp. Sensor

F 1 Front ABS Speed Sensor LH
F 2 Front ABS Speed Sensor RH
F 3 Front Turn Signal Light LH
F 4 Front Turn Signal Light RH
F 9 Front Airbag Sensor LH
F10 Front Airbag Sensor RH

G 1 Generator
G 2 Generator

H 1 Headlight LH
H 2 Headlight RH
H 3 Heated Oxygen Sensor (Bank 1 Sensor 1) (*1)
H 4 Heated Oxygen Sensor (Bank 1 Sensor 2) (*1)
H 5 Horn

Position of Parts in Engine Compartment

[5VZ–FE]

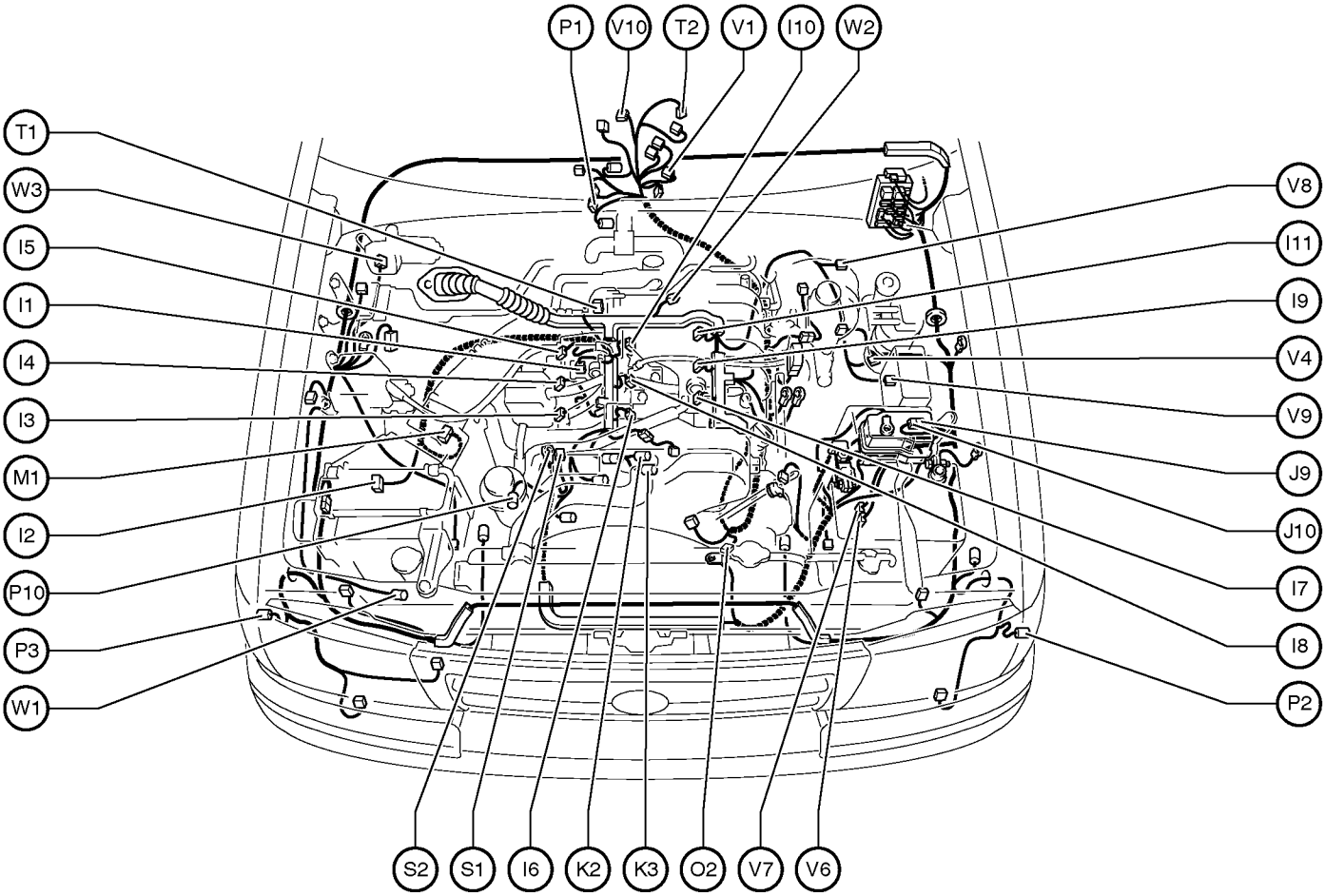

I 1 Idle Air Control Valve
I 2 Igniter
I 3 Ignition Coil No.1
I 4 Ignition Coil No.2
I 5 Ignition Coil No.3
I 6 Injector No.1
I 7 Injector No.2
I 8 Injector No.3
I 9 Injector No.4
I 10 Injector No.5
I 11 Injector No.6

J 9 Junction Connector
J 10 Junction Connector

K 2 Knock Sensor 1
K 3 Knock Sensor 2

M 1 Mass Air Flow Meter

O 2 Oil Pressure SW

P 1 Park/Neutral Position SW
P 2 Parking Light LH
P 3 Parking Light RH
P 10 Power Steering Oil Pressure SW

S 1 Starter
S 2 Starter

T 1 Throttle Position Sensor
T 2 2–4 Select Motor

V 1 Vehicle Speed Sensor (Electronically Controlled Transmission)
V 4 VSV (EVAP)
V 6 VSV 2(ADD)
V 7 VSV 4(ADD)
V 8 Vapor Pressure Sensor
V 9 VSV (Vapor Pressure Sensor)
V 10 Vehicle Speed Sensor

W 1 Washer Motor (Except Cold Area Spec.) or Washer Motor and Washer Level Sensor (Cold Area Spec.)
W 2 Water Temp. Sender
W 3 Wiper Motor

Position of Parts in Engine Compartment

[3RZ–FE, 2RZ–FE]

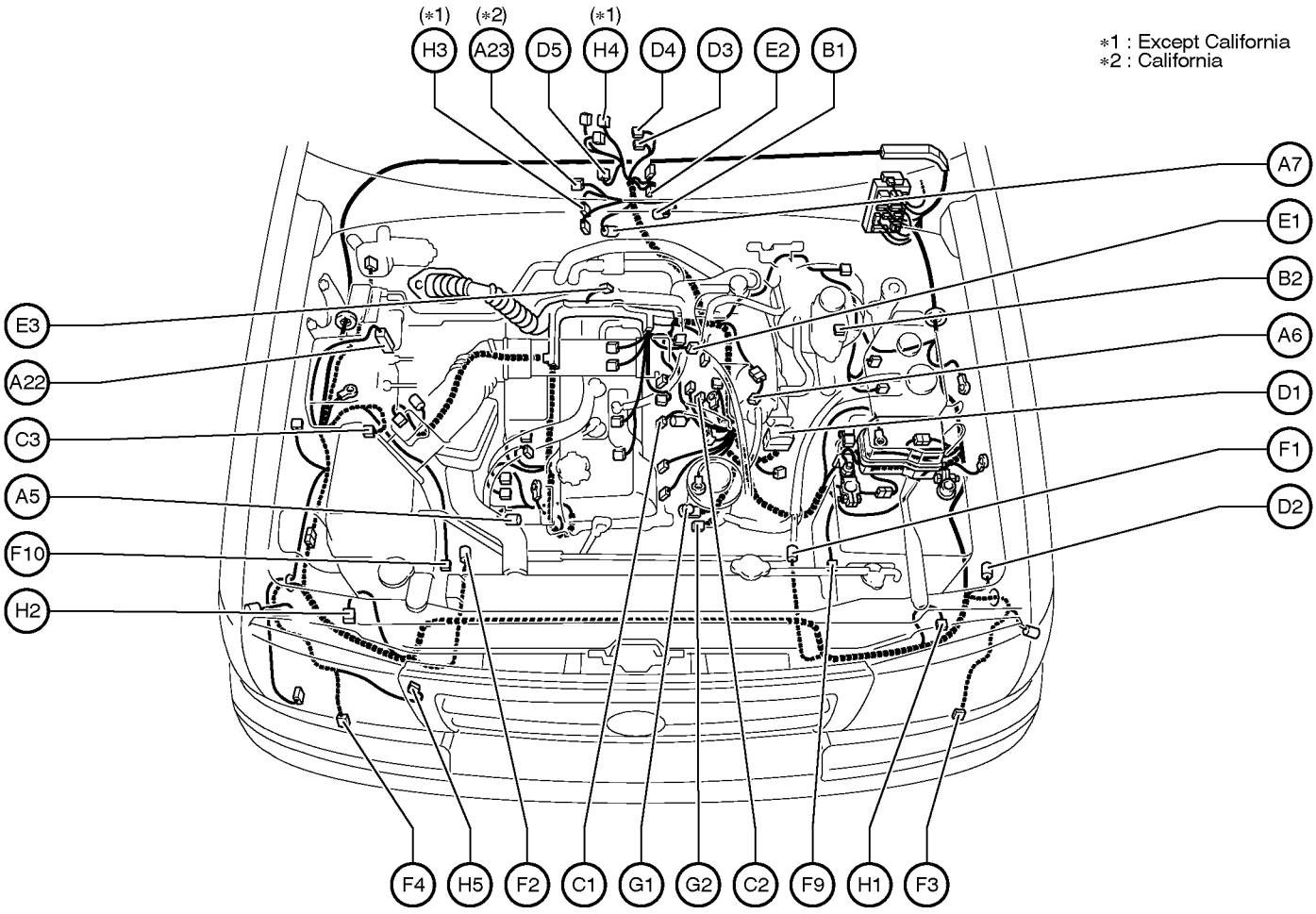

A 5 A/C Magnetic Clutch
A 6 ADD Indicator SW
A 7 A/T Oil Temp. Sensor
A22 ABS Actuator with ECU
A23 Air Fuel Ratio Sensor (Bank 1 Sensor 1) (∗2)

B 1 Back–Up Light SW
B 2 Brake Fluid Level Warning SW

C 1 Camshaft Position Sensor
C 2 Crankshaft Position Sensor
C 3 Cruise Control Actuator

D 1 Data Link Connector 1
D 2 Daytime Running Light Resistor
D 3 Detection SW (Transfer L4 Position)
D 4 Detection SW (Transfer Neutral Position)
D 5 Detection SW (Transfer 4WD Position)

E 1 EGR Gas Temp. Sensor
E 2 Electronically Controlled Transmission Solenoid
E 3 Engine Coolant Temp. Sensor

F 1 Front ABS Speed Sensor LH
F 2 Front ABS Speed Sensor RH
F 3 Front Turn Signal Light LH
F 4 Front Turn Signal Light RH
F 9 Front Airbag Sensor LH
F10 Front Airbag Sensor RH

G 1 Generator
G 2 Generator

H 1 Headlight LH
H 2 Headlight RH
H 3 Heated Oxygen Sensor (Bank 1 Sensor 1) (∗1)
H 4 Heated Oxygen Sensor (Bank 1 Sensor 2) (∗1)
H 5 Horn

Position of Parts in Engine Compartment

[3RZ–FE, 2RZ–FE]

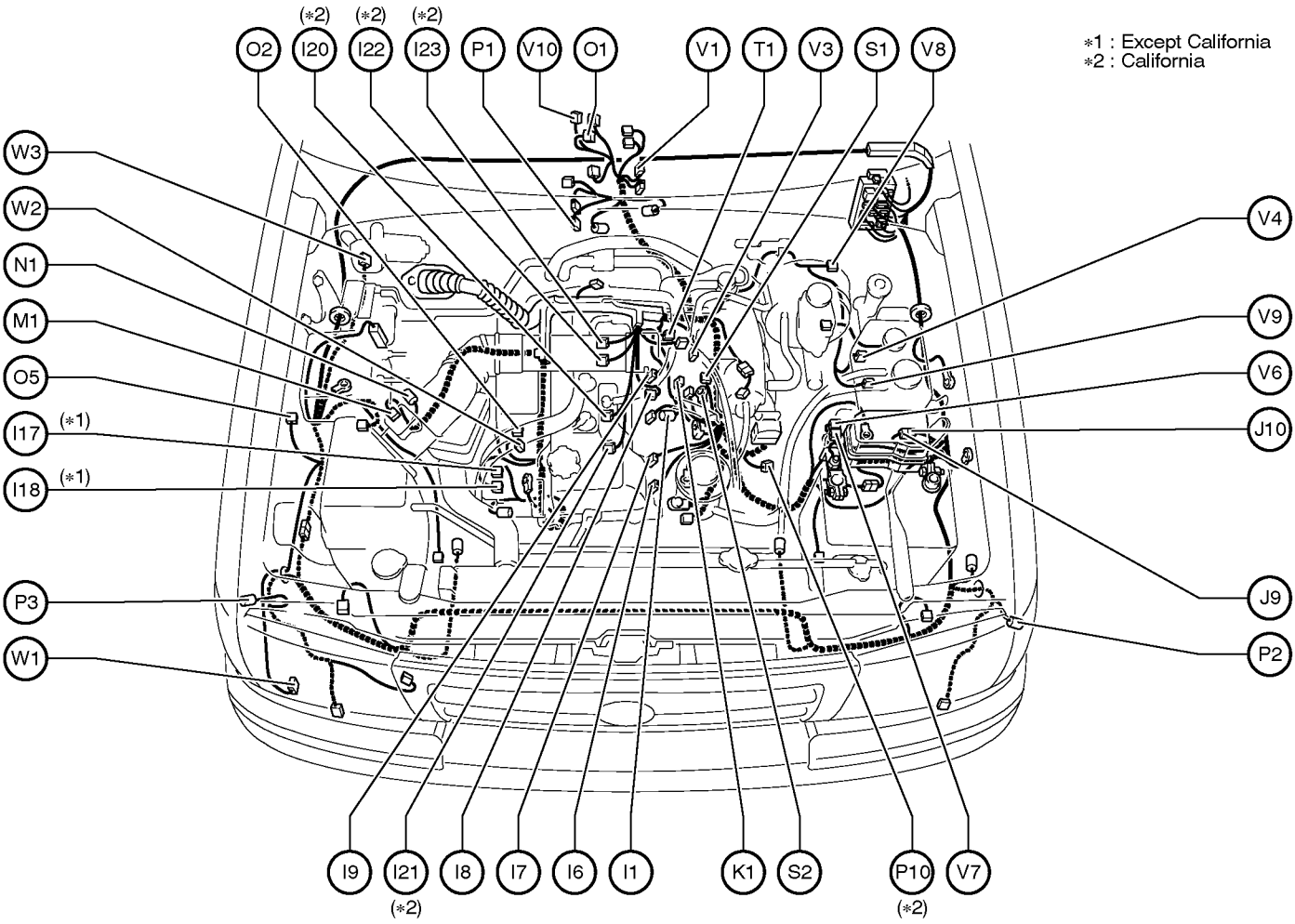

I 1 Idle Air Control Valve
I 6 Injector No.1
I 7 Injector No.2
I 8 Injector No.3
I 9 Injector No.4
I 17 Ignition Coil and Igniter No.1 (∗1)
I 18 Ignition Coil and Igniter No.2 (∗1)
I 20 Ignition Coil and Igniter No.1 (∗2)
I 21 Ignition Coil and Igniter No.2 (∗2)
I 22 Ignition Coil and Igniter No.3 (∗2)
I 23 Ignition Coil and Igniter No.4 (∗2)

J 9 Junction Connector
J 10 Junction Connector

K 1 Knock Sensor

M 1 Mass Air Flow Meter

N 1 Noise Filter (Ignition System)

O 1 O/D Solenoid
O 2 Oil Pressure SW
O 5 O/D Cut Relay

P 1 Park/Neutral Position SW
P 2 Parking Light LH
P 3 Parking Light RH
P 10 Power Steering Oil Pressure SW (∗2)

S 1 Starter
S 2 Starter

T 1 Throttle Position Sensor

V 1 Vehicle Speed Sensor (Electronically Controlled Transmission)
V 3 VSV (EGR)
V 4 VSV (EVAP)
V 6 VSV 2(ADD)
V 7 VSV 4(ADD)
V 8 Vapor Pressure Sensor
V 9 VSV (Vapor Pressure Sensor)
V 10 Vehicle Speed Sensor

W 1 Washer Motor (Except Cold Area Spec.) or Washer Motor and Washer Level Sensor (Cold Area Spec.)
W 2 Water Temp. Sender
W 3 Wiper Motor

Position of Parts in Instrument Panel

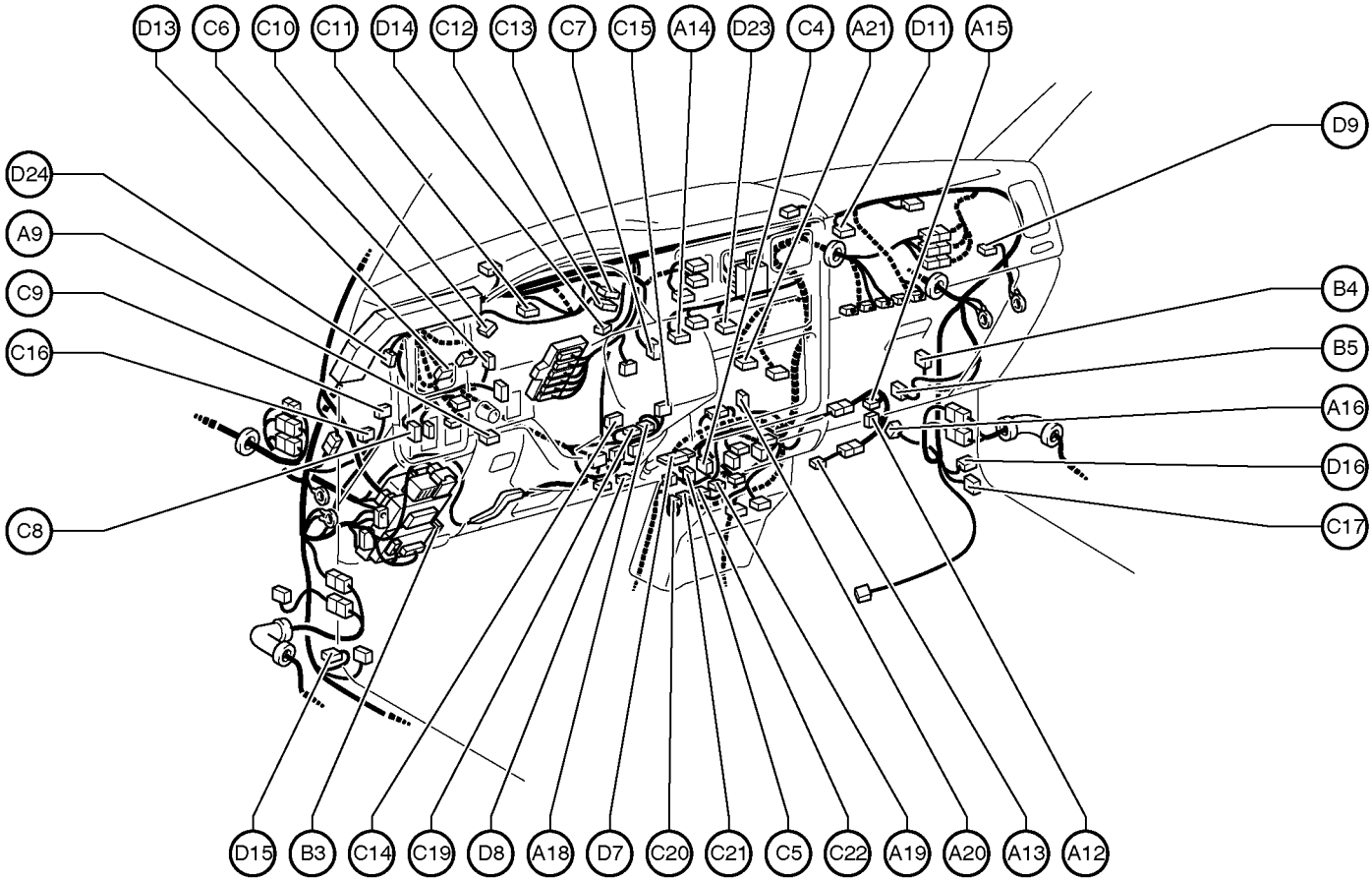

A 9 ABS Deceleration Sensor (4WD)
A12 A/C Amplifier
A13 A/C Dual Pressure SW
A14 A/C SW
A15 A/C Thermistor
A16 ADD Control Relay
A18 Airbag Squib (Steering Wheel Pad)
A19 Ashtray Illumination
A20 Auto Antenna Control Relay
A21 Airbag Squib (Front Passenger Airbag Assembly)

B 3 Back–Up Light Relay
B 4 Blower Motor
B 5 Blower Resistor

C 4 Cigarette Lighter
C 5 Cigarette Lighter Illumination
C 6 Circuit Opening Relay
C 7 Clock
C 8 Clutch Start Cancel SW
C 9 Clutch Start SW
C10 Combination Meter
C11 Combination Meter
C12 Combination Meter
C13 Combination Meter
C14 Combination SW
C15 Combination SW
C16 Cruise Control Clutch SW
C17 Cruise Control ECU
C19 Combination SW
C20 Center Airbag Sensor Assembly
C21 Center Airbag Sensor Assembly
C22 Center Airbag Sensor Assembly

D 7 Data Link Connector 3
D 8 Daytime Running Light Relay (Main)
D 9 Daytime Running Light Relay No.4
D11 Diode (O/D)
D13 Diode No.1 (Daytime Running Light System)
D14 Diode No.2 (Daytime Running Light System)
D15 Door Courtesy SW LH
D16 Door Courtesy SW RH
D23 Defroster Mode SW
D24 Diode (Door Courtesy)

Position of Parts in Instrument Panel

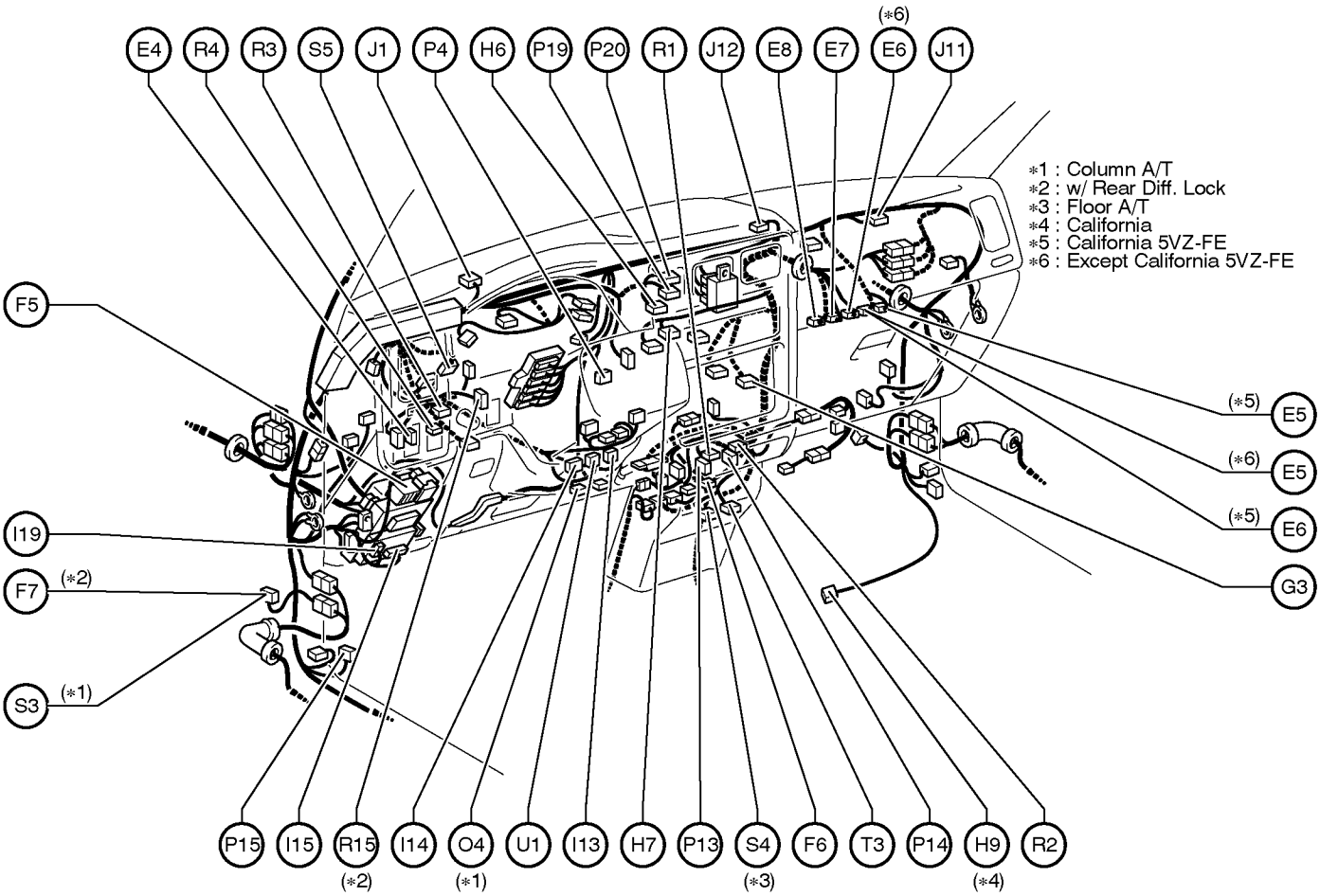

E 4 Electronically Controlled Transmission Pattern Select SW
E 5 Engine Control Module
E 6 Engine Control Module
E 7 Engine Control Module
E 8 Engine Control Module

F 5 Fuse Box
F 6 4WD ECU
F 7 4WD Control ECU

G 3 Glove Box Light

H 6 Hazard SW
H 7 Heater Blower SW
H 9 Heated Oxygen Sensor (Bank 1 Sensor 2) (*4)

I 13 Ignition Key Cylinder Light
I 14 Ignition SW
I 15 Integration Relay
I 19 Integration Relay

J 1 Junction Connector
J 11 Junction Connector
J 12 Junction Connector

O 4 O/D Main SW,Shift Lock Solenoid and Shift Lock Control SW

P 4 Parking Brake SW
P 13 Power Outlet
P 14 Power Outlet
P 15 Power Window Main Relay
P 19 Passenger Airbag Manual ON/OFF Indicator
P 20 Passenger Airbag Manual ON/OFF SW

R 1 Radio and Player
R 2 Radio and Player
R 3 Rheostat
R 4 Rheostat
R 15 Rear Diff. Lock SW

S 3 Shift Lock Control Relay
S 4 Shift Lock Control Relay and O/D Main SW
S 5 Stop Light SW

T 3 2–4 Select SW

U 1 Unlock Warning SW and Key Interlock Solenoid

G ELECTRICAL WIRING ROUTING

Position of Parts in Body

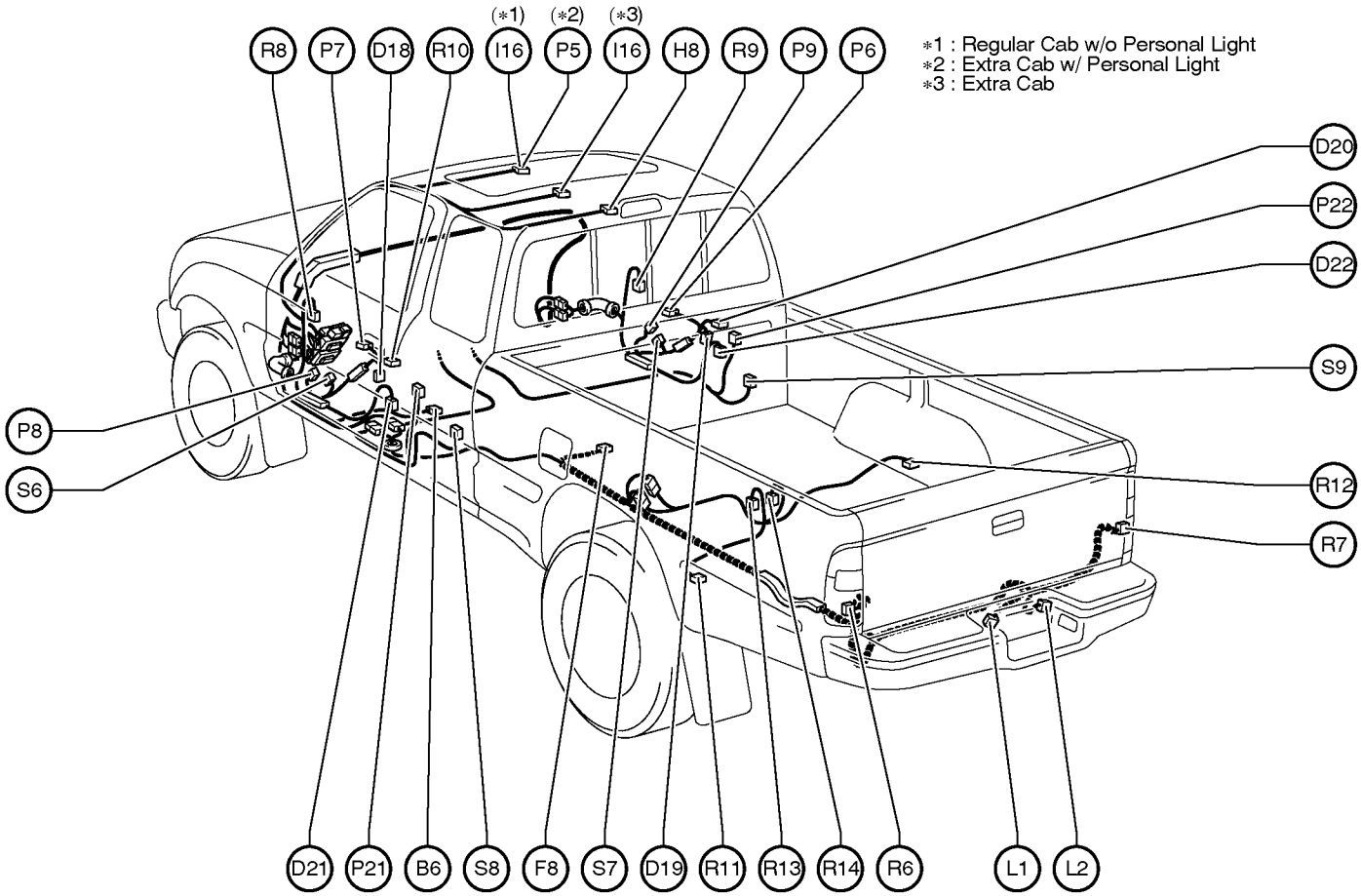

B 6 Buckle SW

D18 Door Courtesy Light LH
D19 Door Courtesy Light RH
D20 Door Lock Control SW RH
D21 Door Lock Motor,Door Unlock Detection SW and Door Key Lock and Unlock SW LH
D22 Door Lock Motor,Door Unlock Detection SW and Door Key Lock and Unlock SW RH

F 8 Fuel Pump and Sender

H 8 High Mounted Stop Light

I 16 Interior Light

L 1 License Plate Light LH
L 2 License Plate Light RH

P 5 Personal Light (∗2)
P 6 Power Window Control SW RH
P 7 Power Window Master SW and Door Lock Control SW LH
P 8 Power Window Motor LH
P 9 Power Window Motor RH
P21 Pretensioner LH
P22 Pretensioner RH

R 6 Rear Combination Light LH
R 7 Rear Combination Light RH
R 8 Remote Control Mirror LH
R 9 Remote Control Mirror RH
R10 Remote Control Mirror SW
R11 Rear ABS Speed Sensor LH
R12 Rear ABS Speed Sensor RH
R13 Rear Diff. Lock Detection SW
R14 Rear Diff. Lock Motor

S 6 Speaker (Door LH)
S 7 Speaker (Door RH)
S 8 Speaker (Rear LH)
S 9 Speaker (Rear RH)

POWER OUTLET

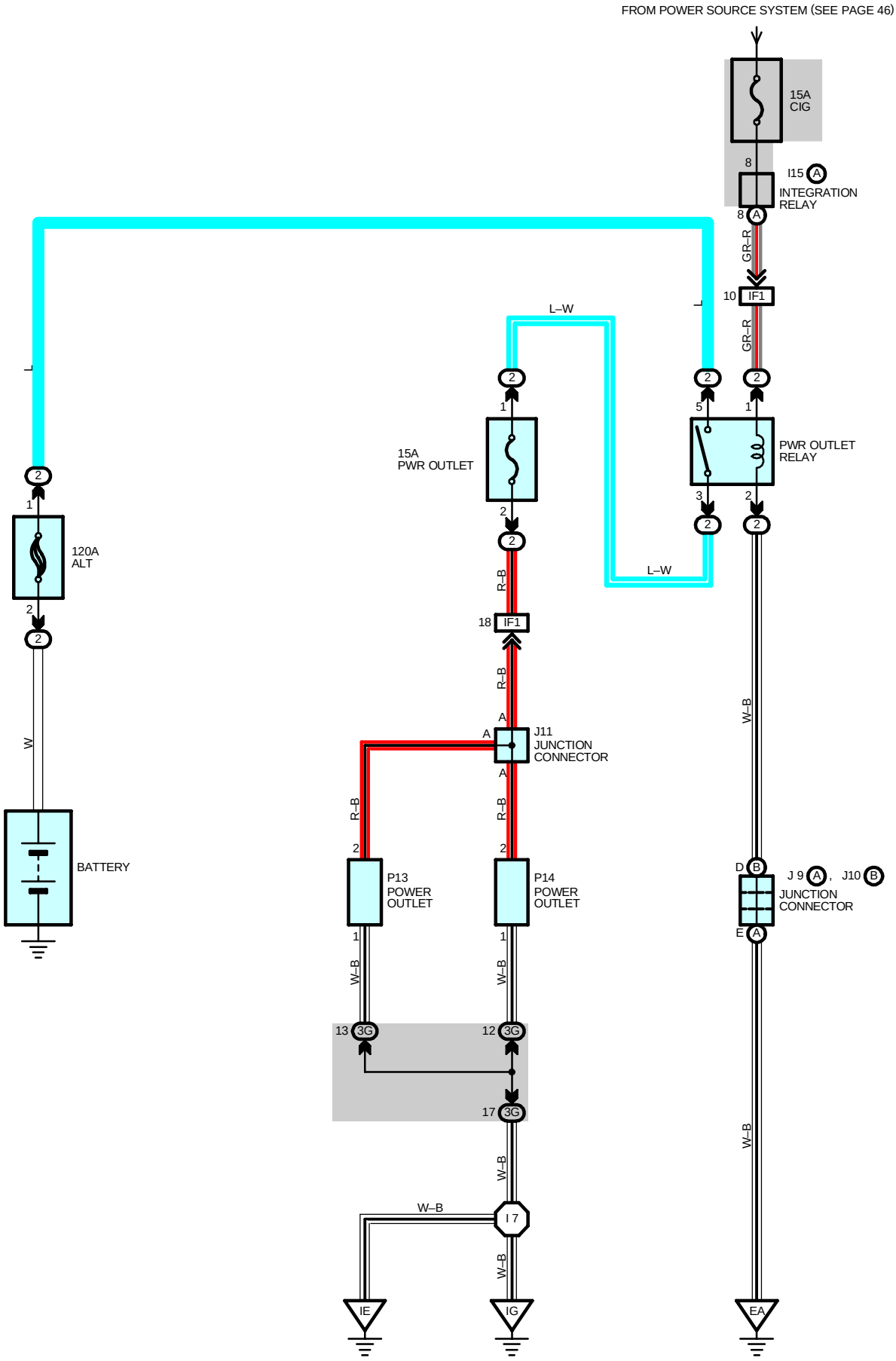

SERVICE HINTS

P13, P14 POWER OUTLET

2–GROUND : Approx. **12** volts with the ignition SW at **ACC** or **ON** position

1–GROUND : Always continuity

: PARTS LOCATION

Code		See Page	Code		See Page	Code	See Page
I15	A	33	J10	B	29 (5VZ–FE)	P13	33
J9	A	29 (5VZ–FE)			31 (3RZ–FE, 2RZ–FE)	P14	33
		31 (3RZ–FE, 2RZ–FE)	J11		33		

: RELAY BLOCKS

Code	See Page	Relay Blocks (Relay Block Location)
2	21	R/B No.2 (Engine Compartment Left)

: JUNCTION BLOCK AND WIRE HARNESS CONNECTOR

Code	See Page	Junction Block and Wire Harness (Connector Location)
3G	26	Cowl Wire and J/B No.3 (Bihind the Instrument Panel Center)

: CONNECTOR JOINING WIRE HARNESS AND WIRE HARNESS

Code	See Page	Joining Wire Harness and Wire Harness (Connector Location)
IF1	40	Engine Room Main Wire and Cowl Wire (Left Kick Panel)

: GROUND POINTS

Code	See Page	Ground Points Location
EA	36 (5VZ–FE)	Front Left Fender
	38 (3RZ–FE, 2RZ–FE)	
IE	40	Around the Right Edge of the Reinforcement
IG	40	Around the Left Edge of the Reinforcement

: SPLICE POINTS

Code	See Page	Wire Harness with Splice Points	Code	See Page	Wire Harness with Splice Points
I7	40	Cowl Wire			

J POWER SOURCE (Current Flow Chart)

The chart below shows the route by which current flows from the battery to each electrical source (Fusible Link, Circuit Breaker, Fuse, etc.) and other parts.

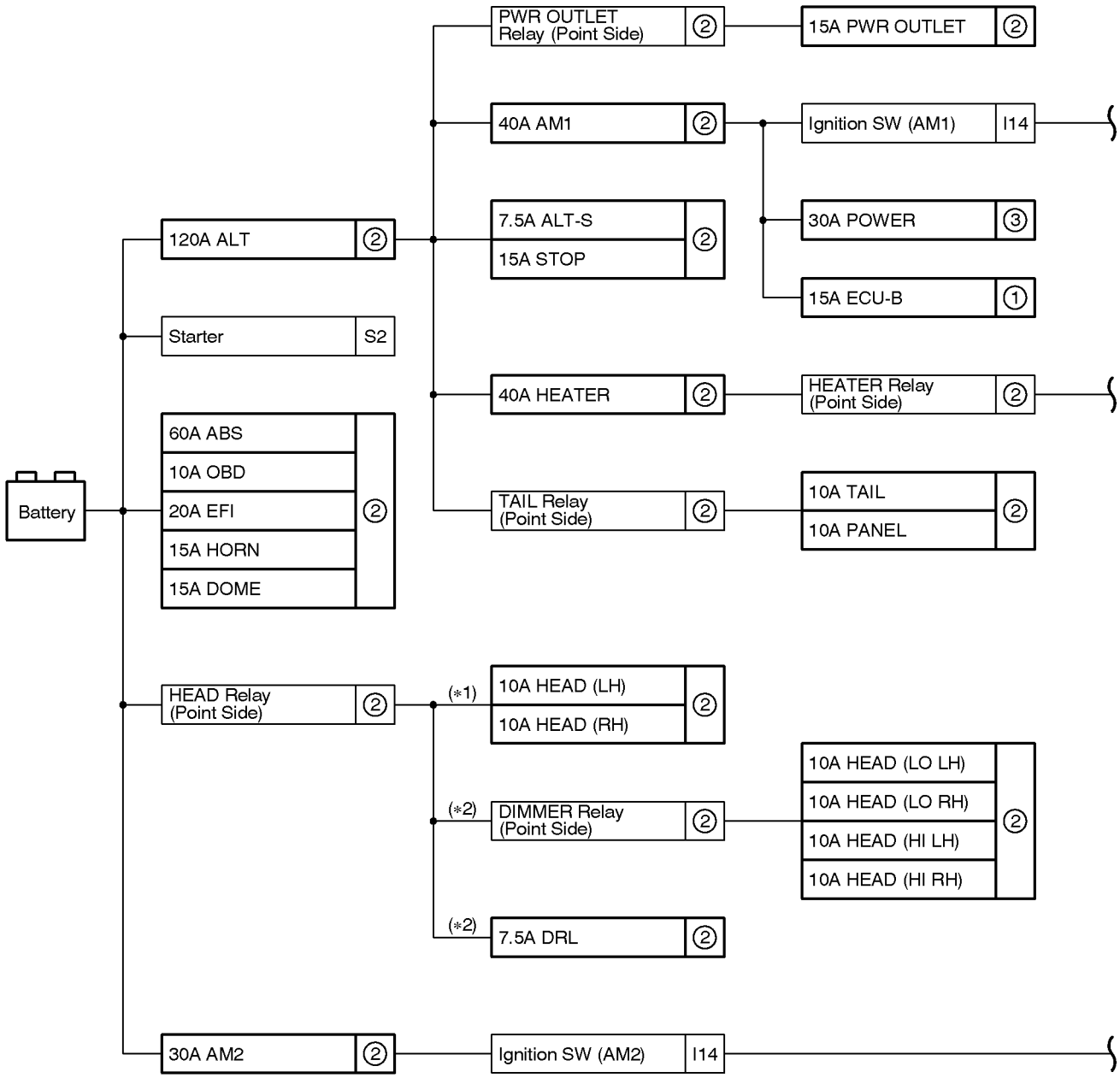

[LOCATION] ① : J/B No.1 (See page 22) ② : R/B No.2 (See page 21)

*1 : w/o Daytime Running Light
*2 : w/ Daytime Running Light

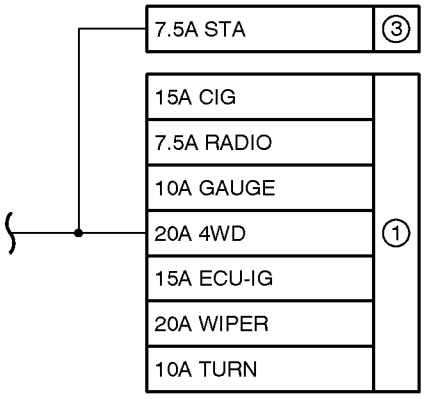

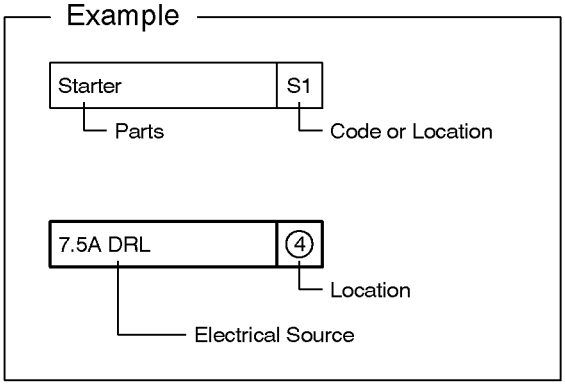





③ : Fuse Box (F5 on See page 22)

R/B No.2 (See Page 21)

Fuse		System	Page
7.5A	ALT–S	Charging	62
7.5A	DRL	Headlight (w/ Daytime Running Light)	114
10A	A.C	Air Conditioning	246
10A	HEAD (HI LH)	Headlight (w/ Daytime Running Light)	114
10A	HEAD (HI RH)	Headlight (w/ Daytime Running Light)	114
10A	HEAD (LH)	Headlight (w/o Daytime Running Light)	112
10A	HEAD (LO LH)	Headlight (w/ Daytime Running Light)	114
10A	HEAD (LO RH)	Headlight (w/ Daytime Running Light)	114
10A	HEAD (RH)	Headlight (w/o Daytime Running Light)	112
10A	OBD	Engine Control (2RZ–FE Except California)	104
		Engine Control (3RZ–FE Except California)	88
		Engine Control (5VZ–FE Except California)	72
		Engine Control (California 2RZ–FE)	96
		Engine Control (California 3RZ–FE)	80
		Engine Control (California 5VZ–FE)	64
10A	PANEL	Cigarette Lighter and Clock	228
		Combination Meter (w/ Tachometer)	234
		Combination Meter (w/o Tachometer)	240
		Taillight and Illumination	120
10A	TAIL	Light Reminder	174
		Taillight and Illumination	120
15A	DOME	Auto Antenna	232
		Cigarette Lighter and Clock	228
		Combination Meter (w/ Tachometer)	234
		Interior Light	118
		Key Reminder and Seat Belt Warning	222
		Power Window	212
		Radio and Player	230
20A	EFI	Electronically Controlled Transmission (3RZ–FE Except California)	148
		Electronically Controlled Transmission (5VZ–FE Except California)	136
		Electronically Controlled Transmission (California 3RZ–FE)	142
		Electronically Controlled Transmission and A/T Indicator (California 5VZ–FE)	130
		Engine Control (2RZ–FE Except California)	104
		Engine Control (3RZ–FE Except California)	88
		Engine Control (5VZ–FE Except California)	72
		Engine Control (California 2RZ–FE)	96
		Engine Control (California 3RZ–FE)	80
		Engine Control (California 5VZ–FE)	64
15A	HORN	Horn	176
		Turn Signal and Hazard Warning Light	124
15A	PWR OUTLET	Power Outlet	226

∗ These are the page numbers of the first page on which the related system is shown.

Fuse		System	Page
15A	STOP	ABS	170
		Cruise Control (5VZ–FE)	158
		Cruise Control (Except 5VZ–FE)	164
		Electronically Controlled Transmission (3RZ–FE Except California)	148
		Electronically Controlled Transmission (5VZ–FE Except California)	136
		Electronically Controlled Transmission (California 3RZ–FE)	142
		Electronically Controlled Transmission and A/T Indicator (California 5VZ–FE)	130
		Engine Control (2RZ–FE Except California)	104
		Engine Control (3RZ–FE Except California)	88
		Engine Control (5VZ–FE Except California)	72
		Engine Control (California 2RZ–FE)	96
		Engine Control (California 3RZ–FE)	80
		Engine Control (California 5VZ–FE)	64
		Shift Lock (Column A/T)	206
		Shift Lock (Floor A/T)	204
		Stop Light	126
30A	AM2	Engine Control (2RZ–FE Except California)	104
		Engine Control (3RZ–FE Except California)	88
		Engine Control (5VZ–FE Except California)	72
		Engine Control (California 2RZ–FE)	96
		Engine Control (California 3RZ–FE)	80
		Engine Control (California 5VZ–FE)	64
		Ignition (2RZ–FE and 3RZ–FE Except California)	60
		Ignition (California 2RZ–FE and 3RZ–FE)	58
		Starting and Ignition (5VZ–FE)	50
40A	AM1	Engine Control (2RZ–FE Except California)	104
		Engine Control (3RZ–FE Except California)	88
		Engine Control (5VZ–FE Except California)	72
		Engine Control (California 2RZ–FE)	96
		Engine Control (California 3RZ–FE)	80
		Engine Control (California 5VZ–FE)	64
		Starting (2RZ–FE and 3RZ–FE)	54
		Starting and Ignition (5VZ–FE)	50
40A	HEATER	Air Conditioning	246
60A	ABS	ABS	170
120A	ALT	Charging	62
		Engine Control (2RZ–FE Except California)	104
		Engine Control (3RZ–FE Except California)	88
		Engine Control (5VZ–FE Except California)	72
		Engine Control (California 2RZ–FE)	96
		Engine Control (California 3RZ–FE)	80
		Engine Control (California 5VZ–FE)	64

* These are the page numbers of the first page on which the related system is shown.

J POWER SOURCE (Current Flow Chart)

Fuse		System	Page
120A	ALT	Power Outlet	226
		Starting (2RZ–FE and 3RZ–FE)	54
		Starting and Ignition (5VZ–FE)	50
		Taillight and Illumination	120

J/B No.1 (See Page 22)

Fuse		System	Page
7.5A	IGN	Charging	62
		Combination Meter (w/ Tachometer)	234
		Combination Meter (w/o Tachometer)	240
		Electronically Controlled Transmission (3RZ–FE Except California)	148
		Electronically Controlled Transmission (5VZ–FE Except California)	136
		Electronically Controlled Transmission (California 3RZ–FE)	142
		Electronically Controlled Transmission and A/T Indicator (California 5VZ–FE)	130
		Engine Control (2RZ–FE Except California)	104
		Engine Control (3RZ–FE Except California)	88
		Engine Control (5VZ–FE Except California)	72
		Engine Control (California 2RZ–FE)	96
		Engine Control (California 3RZ–FE)	80
		Engine Control (California 5VZ–FE)	64
		SRS	179
7.5A	RADIO	Auto Antenna	232
		Radio and Player	230
10A	GAUGE	A/T Indicator (2RZ–FE)	154
		ABS	170
		Air Conditioning	246
		Auto Antenna	232
		Back–Up Light	128
		Charging	62
		Combination Meter (w/ Tachometer)	234
		Combination Meter (w/o Tachometer)	240
		Cruise Control (5VZ–FE)	158
		Cruise Control (Except 5VZ–FE)	164
		Electronically Controlled Transmission (3RZ–FE Except California)	148
		Electronically Controlled Transmission (5VZ–FE Except California)	136
		Electronically Controlled Transmission (California 3RZ–FE)	142
		Electronically Controlled Transmission and A/T Indicator (California 5VZ–FE)	130
		Engine Control (2RZ–FE Except California)	104
		Engine Control (3RZ–FE Except California)	88
		Engine Control (5VZ–FE Except California)	72
		Engine Control (California 2RZ–FE)	96
		Engine Control (California 3RZ–FE)	80
		Engine Control (California 5VZ–FE)	64

∗ These are the page numbers of the first page on which the related system is shown.

Fuse		System	Page
10A	GAUGE	Headlight (w/ Daytime Running Light)	114
		Interior Light	118
		Key Reminder and Seat Belt Warning	222
		Light Reminder	174
		Power Window	212
		Rear Differential Lock (California A/T)	196
		Rear Differential Lock (Except California A/T)	200
		Starting (2RZ–FE and 3RZ–FE)	54
		Starting and Ignition (5VZ–FE)	50
		4WD (California A/T w/o 2–4 Select SW)	186
		4WD (California M/T w/o 2–4 Select SW)	190
		4WD (w/ 2–4 Select SW)	182
		4WD (w/o 2–4 Select SW Except California)	192
10A	TURN	Turn Signal and Hazard Warning Light	124
15A	CIG	A/T Indicator (2RZ–FE)	154
		Back–Up Light	128
		Cigarette Lighter and Clock	228
		Cruise Control (5VZ–FE)	158
		Cruise Control (Except 5VZ–FE)	164
		Electronically Controlled Transmission and A/T Indicator (California 5VZ–FE)	130
		Light Reminder	174
		Power Outlet	226
		Remote Control Mirror	216
		Shift Lock (Column A/T)	206
		Shift Lock (Floor A/T)	204
		SRS	179
15A	ECU–B	Combination Meter (w/ Tachometer)	234
		Combination Meter (w/o Tachometer)	240
		Cruise Control (Except 5VZ–FE)	158
		Headlight (w/ Daytime Running Light)	114
		SRS	179
15A	ECU–IG	ABS	170
		Cruise Control (5VZ–FE)	158
		Cruise Control (Except 5VZ–FE)	164
		Shift Lock (Column A/T)	206
		Shift Lock (Floor A/T)	204
20A	4WD	Rear Differential Lock (California A/T)	196
		Rear Differential Lock (Except California A/T)	200
		4WD (California A/T w/o 2–4 Select SW)	186
		4WD (California M/T w/o 2–4 Select SW)	190
		4WD (w/ 2–4 Select SW)	182
		4WD (w/o 2–4 Select SW Except California)	192
20A	WIPER	Wiper and Washer	218

∗ These are the page numbers of the first page on which the related system is shown.

Fuse Box (See Page 22)

Fuse		System	Page
7.5A	STA	Electronically Controlled Transmission (3RZ–FE Except California)	148
		Electronically Controlled Transmission (5VZ–FE Except California)	136
		Electronically Controlled Transmission (California 3RZ–FE)	142
		Electronically Controlled Transmission and A/T Indicator (California 5VZ–FE)	130
		Engine Control (2RZ–FE Except California)	104
		Engine Control (3RZ–FE Except California)	88
		Engine Control (5VZ–FE Except California)	72
		Engine Control (California 2RZ–FE)	96
		Engine Control (California 3RZ–FE)	80
		Engine Control (California 5VZ–FE)	64
		Starting (2RZ–FE and 3RZ–FE)	54
		Starting and Ignition (5VZ–FE)	50
30A	POWER	Door Lock Control	208
		Power Window	212

* These are the page numbers of the first page on which the related system is shown.

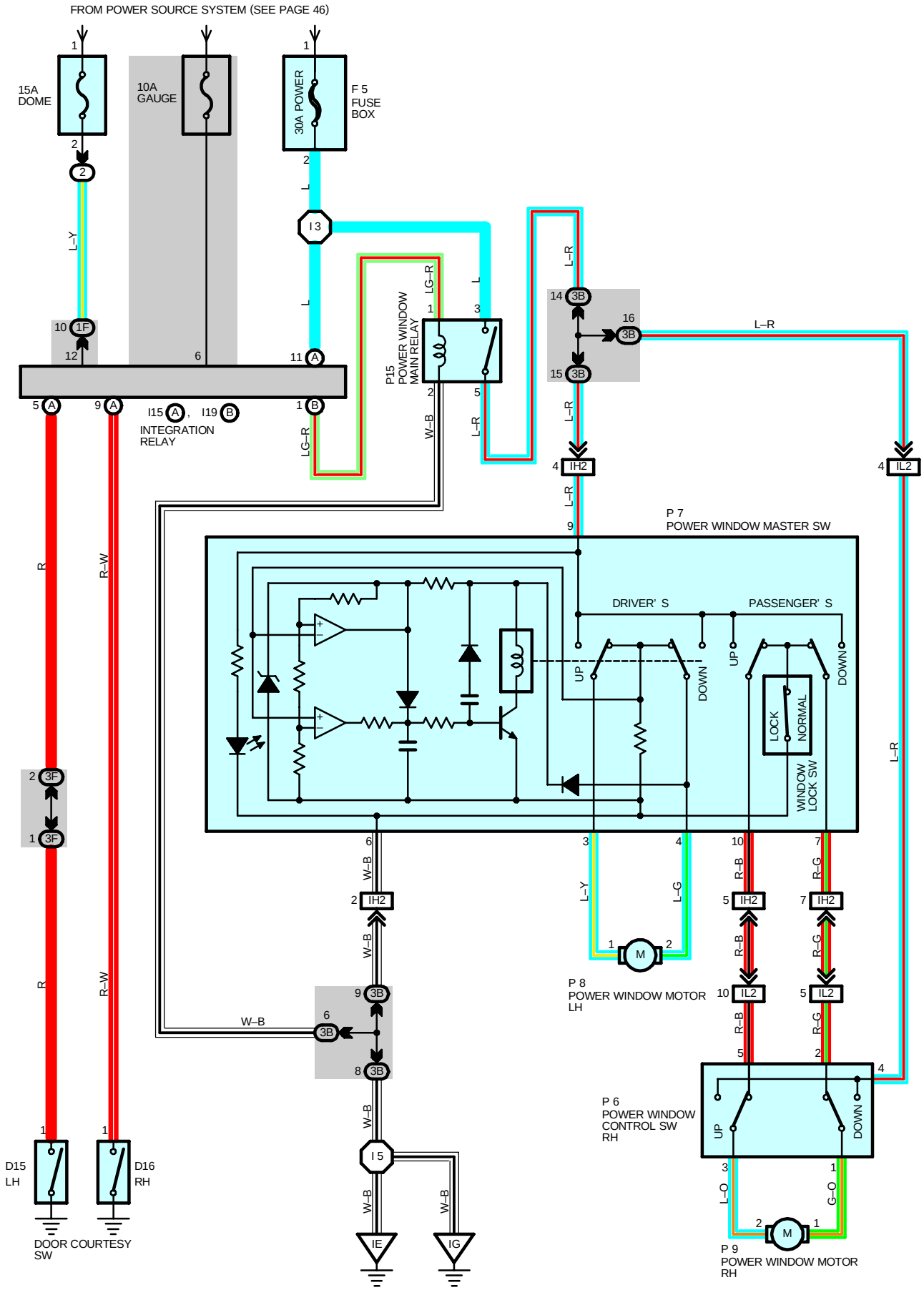
FROM POWER SOURCE SYSTEM (SEE PAGE 46)
15A DOME
10A GAUGE
30A POWER
F 5 FUSE BOX
I 3
L–Y
L
L–R
LG–R
W–B
P15 POWER WINDOW MAIN RELAY
1F
3B
IH2
IL2
I15 A , I19 B
INTEGRATION RELAY
P 7 POWER WINDOW MASTER SW
DRIVER' S
PASSENGER' S
UP
DOWN
LOCK
NORMAL
WINDOW LOCK SW
3F
R
R–W
D15 LH
D16 RH
DOOR COURTESY SW
I 5
IE
IG
P 8 POWER WINDOW MOTOR LH
P 6 POWER WINDOW CONTROL SW RH
P 9 POWER WINDOW MOTOR RH
L–O
G–O
R–B
R–G
M

SYSTEM OUTLINE

With the ignition SW turned on, current flows through the GAUGE fuse to TERMINAL 6 of the integration relay to TERMINAL (B) 1 to TERMINAL 1 of the power window main relay to TERMINAL 2 to GROUND, activating the power window main relay, and the current flowing from TERMINAL 3 of the power window main relay flows to TERMINAL 5 to TERMINAL 9 of the power window master SW and TERMINAL 4 of the power window control SW RH.

1. MANUAL OPERATION (DRIVER'S WINDOW)

With the ignition SW turned on and with the power window master SW (Manual SW) in UP position, the current flowing to TERMINAL 9 of the power window master SW flows to TERMINAL 3 to TERMINAL 1 of the power window motor LH to TERMINAL 2 to TERMINAL 4 of the master SW to TERMINAL 6 to GROUND and causes the power window motor to rotate in the up direction. The window ascends only while the SW is being pushed.

In down operation, the current flowing from TERMINAL 9 of the power window master SW to TERMINAL 4 flows to TERMINAL 2 of the motor LH to TERMINAL 1 to TERMINAL 3 of the master SW to TERMINAL 6 to GROUND, flowing in the opposite direction to manual up operation, causing the motor to rotate in reverse and lowering the window.

2. AUTO DOWN OPERATION (DRIVER'S WINDOW)

With the ignition SW on and with the auto SW of the power window master SW in DOWN position, the current flowing to TERMINAL 9 of the master SW flows to TERMINAL 4 of the master SW to TERMINAL 2 of the power window motor LH to TERMINAL 1 to TERMINAL 3 of the master SW to TERMINAL 6 to GROUND, causing the motor to rotate towards the down side.

Then the solenoid in the master SW is activated and it locks the auto SW being pushed, causing the motor to continue to rotate in auto down operation.

When the window has completely descended, the current flowing between TERMINAL 3 of the master SW and TERMINAL 6 increases. As a result, the solenoid stops operating, the auto SW turns off and the flowing from TERMINAL 9 of the master SW to TERMINAL 4 is cut off, stopping the motor so that auto stop occurs.

3. STOPPING OF AUTO DOWN AT DRIVER'S WINDOW

When the manual SW (Driver's) is pushed to the up side during auto down operation, a ground circuit opens in the master SW and current does not flow from TERMINAL 3 of the master SW to TERMINAL 6, so the motor stops, causing auto down operation to stop. If the manual SW is pushed continuously, the motor rotates in the up direction in manual up operation.

4. MANUAL OPERATION BY POWER WINDOW CONTROL SW (PASSENGER'S WINDOW)

With the power window control SW RH is pushed to the up side, the current flowing from TERMINAL 4 of the power window control SW RH flows to TERMINAL 3 of the power window control SW RH to TERMINAL 2 of the power window motor RH to TERMINAL 1 to TERMINAL 1 of the power window control SW RH to TERMINAL 2 to TERMINAL 7 of the master SW to TERMINAL 6 to GROUND. This causes the power window motor RH to rotate in the up direction. Up operation is continuous only while the power window control SW RH is pushed to the up side. When the window descends, the current flowing to the motor flows in the opposite direction, from TERMINAL 1 to TERMINAL 2, and the motor rotates in revers.

When the window lock SW is pushed to the lock side, the ground circuit to the passenger's window becomes open. As a result, even if Open/Close operation of the passenger's window is tried, the current from TERMINAL 6 of the power window master SW is not grounded and the motor does not rotate, so the passenger's window can not be operated and window lock occurs.

5. KEY OFF POWER WINDOW OPERATION

With the ignition SW turned from on to off, the integration relay operates for about 45 seconds and current flows from TERMINAL 1 of the power window main relay to TERMINAL 2 to GROUND. For this period, current also flows TERMINAL 3 to TERMINAL 5. This current flows to TERMINAL 9 of the power window master SW and to TERMINAL 4 of the power window control SW RH. As a result, for about 45 seconds after the ignition SW is turned off, it is possible to raise and lower the power window by the functioning of the integration relay. Also, by opening the door (Door courtesy SW on) within about 45 seconds after turning the ignition SW to off, a signal is input to TERMINAL (A) 5, 11 or 9 of the integration relay. As a result, the integration relay turns off, and up and down movement of the window stops.

POWER WINDOW

SERVICE HINTS

D15, D16 DOOR COURTESY SW LH, RH

1–GROUND : Continuity with door open

I15 (A), I19 (B) INTEGRATION RELAY

6–GROUND : Approx. **12** volts with ignition SW at **ON** position
(A)11–GROUND : Always approx. **12** volts
(A) 5–GROUND : Continuity with LH door opened
(A) 9–GROUND : Continuity with RH door opened

P6 POWER WINDOW CONTROL SW RH

4–GROUND : Approx. **12** volts with ignition SW on and stays at **12** volts for **45** seconds after the ignition SW is turned off, but if a door is open in the **45** seconds period, voltage will drop to **0** volts

P7 POWER WINDOW MASTER SW

6–GROUND : Always continuity
9–GROUND : Approx. **12** volts with ignition SW on and stays at **12** volts for **45** seconds after the ignition SW is turned off, but if a door is opened in this **45** seconds period, voltage will drop to **0** volts
3–GROUND : Approx. **12** volts with ignition SW at **ON** position and master SW at **UP** position
4–GROUND : Approx. **12** volts with ignition SW at **ON** position and master SW at **DOWN** or **AUTO DOWN** position

WINDOW LOCK SW

Open with window lock SW at **LOCK** position

: PARTS LOCATION

Code	See Page	Code	See Page	Code	See Page
D15	32	I19 B	33	P9	34
D16	32	P6	34	P15	33
F5	33	P7	34		
I15 A	33	P8	34		

: RELAY BLOCKS

Code	See Page	Relay Blocks (Relay Block Location)
2	21	R/B No.2 (Engine Compartment Left)

: JUNCTION BLOCK AND WIRE HARNESS CONNECTOR

Code	See Page	Junction Block and Wire Harness (Connector Location)
1F	22	Engine Room Main Wire and J/B No.1 (Lower Finish Panel)
3B	24	Cowl Wire and J/B No.3 (Bihind the Instrument Panel Left)
3F		

: CONNECTOR JOINING WIRE HARNESS AND WIRE HARNESS

Code	See Page	Joining Wire Harness and Wire Harness (Connector Location)
IH2	40	Front Door LH Wire and Cowl Wire (Left Kick Panel)
IL2	40	Front Door RH Wire and Cowl Wire (Right Kick Panel)

: GROUND POINTS

Code	See Page	Ground Points Location
IE	40	Around the Right Edge of the Reinforcement
IG	40	Around the Left Edge of the Reinforcement

: SPLICE POINTS

Code	See Page	Wire Harness with Splice Points	Code	See Page	Wire Harness with Splice Points
I3	40	Cowl Wire	I5	40	Cowl Wire

RADIO AND PLAYER

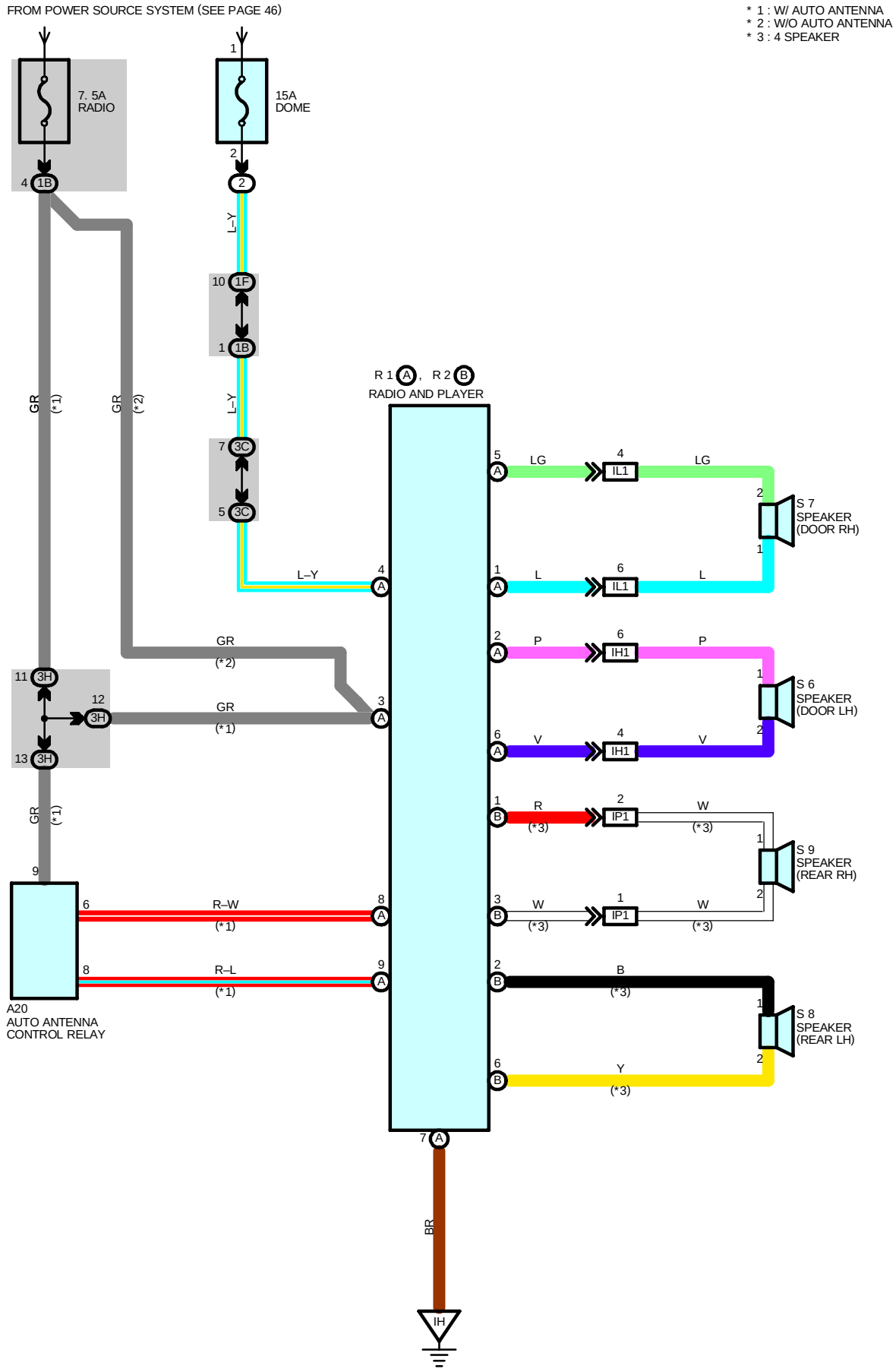

SERVICE HINTS

R1 (A) RADIO AND PLAYER

(A) 3–GROUND : Approx. **12** volts with ignition SW at **ON** or **ACC** position
(A) 4–GROUND : Always approx. **12** volts
(A) 7–GROUND : Always continuity

: PARTS LOCATION

Code		See Page	Code	See Page	Code	See Page
A20		32	S6	34	S9	34
R1	A	33	S7	34		
R2	B	33	S8	34		

: RELAY BLOCKS

Code	See Page	Relay Blocks (Relay Block Location)
2	21	R/B No.2 (Engine Compartment Left)

: JUNCTION BLOCK AND WIRE HARNESS CONNECTOR

Code	See Page	Junction Block and Wire Harness (Connector Location)
1B	22	Cowl Wire and J/B No.1 (Lower Finish Panel)
1F	22	Engine Room Main Wire and J/B No.1 (Lower Finish Panel)
3C	24	Cowl Wire and J/B No.3 (Bihind the Instrument Panel Left)
3H	26	Cowl Wire and J/B No.3 (Bihind the Instrument Panel Center)

: CONNECTOR JOINING WIRE HARNESS AND WIRE HARNESS

Code	See Page	Joining Wire Harness and Wire Harness (Connector Location)
IH1	40	Front Door LH Wire and Cowl Wire (Left Kick Panel)
IL1	40	Front Door RH Wire and Cowl Wire (Right Kick Panel)
IP1	40	Floor No.3 Wire and Floor No.3 Wire (Bihind the Radio and Player)

: GROUND POINTS

Code	See Page	Ground Points Location
IH	40	Right Kick Panel

F RELAY LOCATIONS

[Engine Compartment]

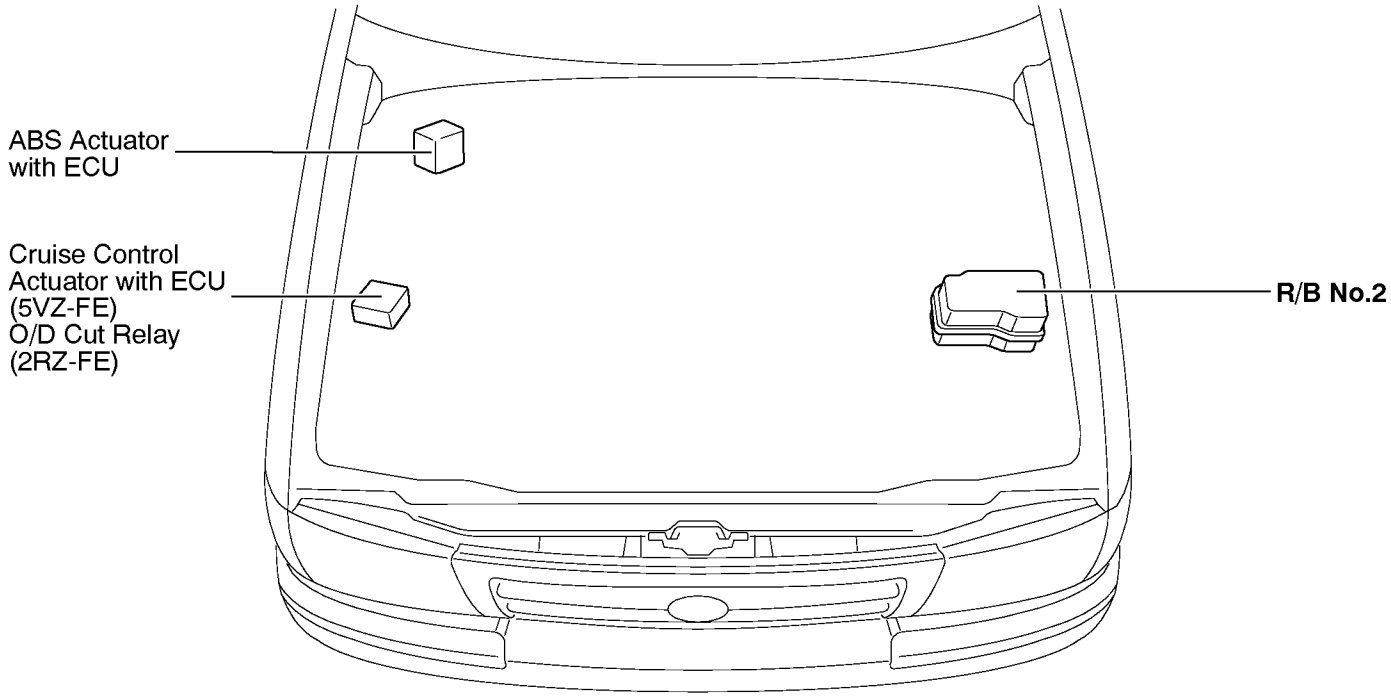

[Instrument Panel]

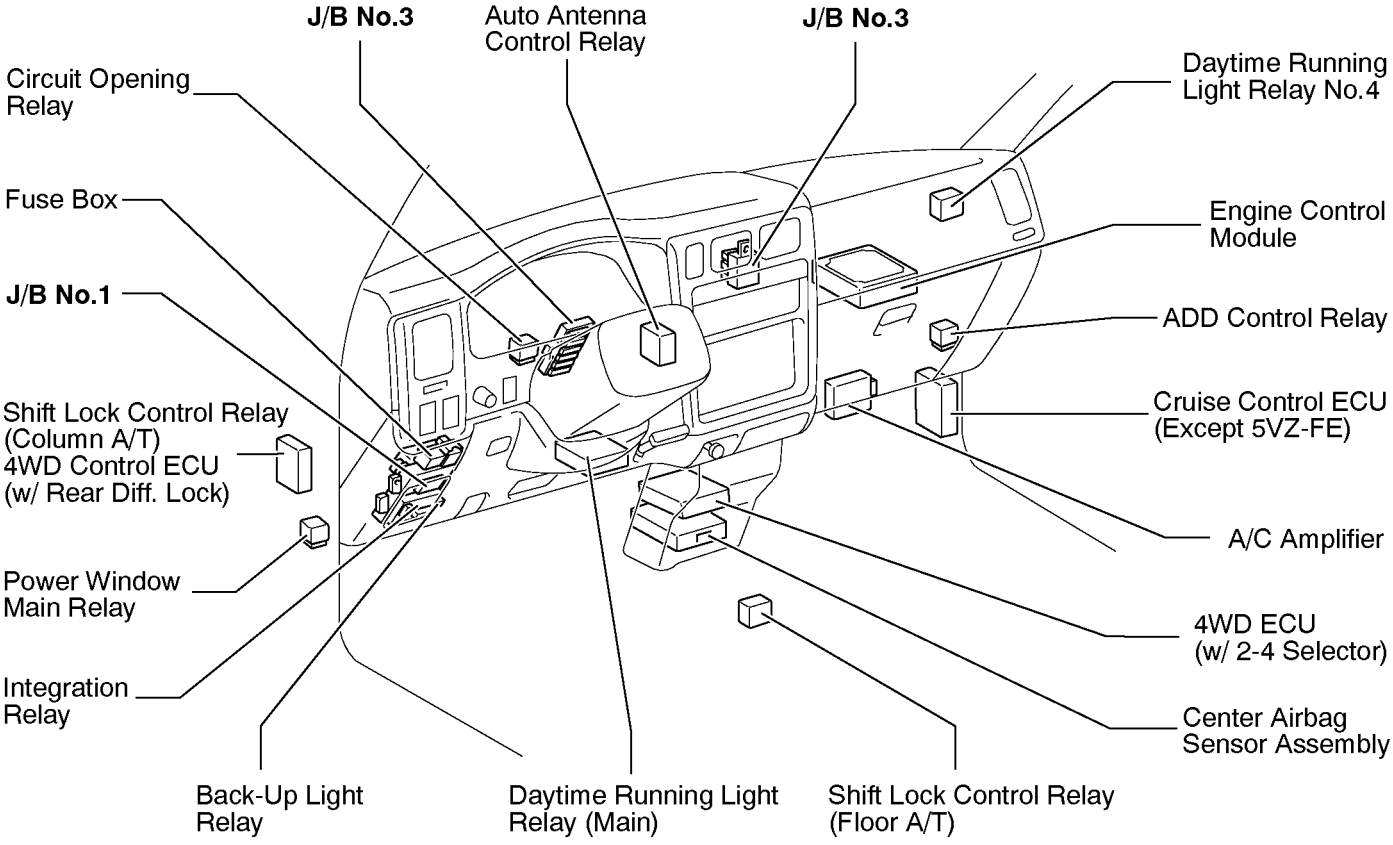

② : R/B No.2	Engine Compartment Left (See Page 20)

∗1 : w/ Daytime Running Light
∗2 : HEAD (HI RH) (w/ Daytime Running Light)
∗3 : HEAD (HI LH) (w/ Daytime Running Light)
∗4 : HEAD (RH) (w/o Daytime Running Light), HEAD (LO RH) (w/ Daytime Running Light)
∗5 : HEAD (LH) (w/o Daytime Running Light), HEAD (LO LH) (w/ Daytime Running LIght)

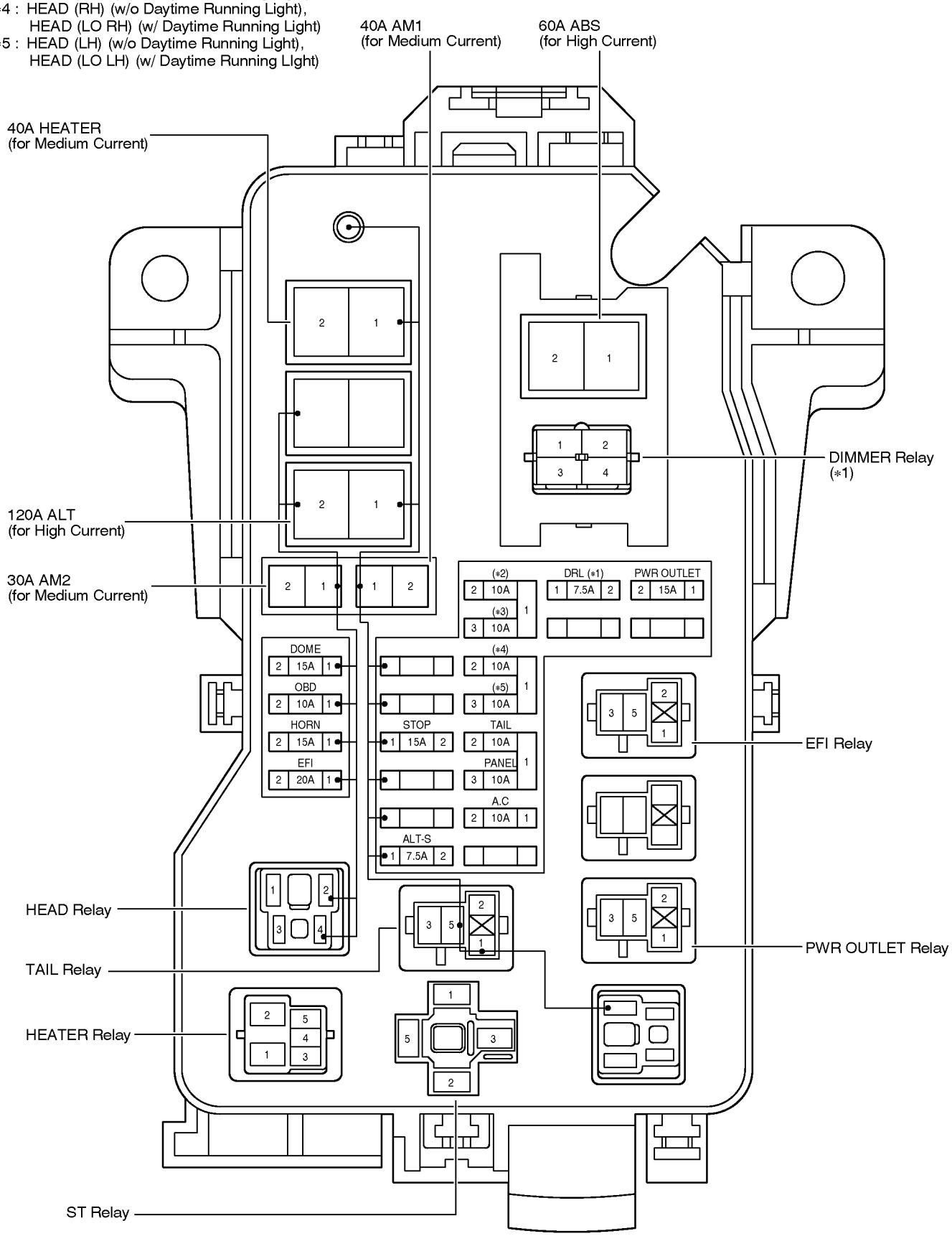

F RELAY LOCATIONS

: J/B No.1	Lower Finish Panel (See Page 20)

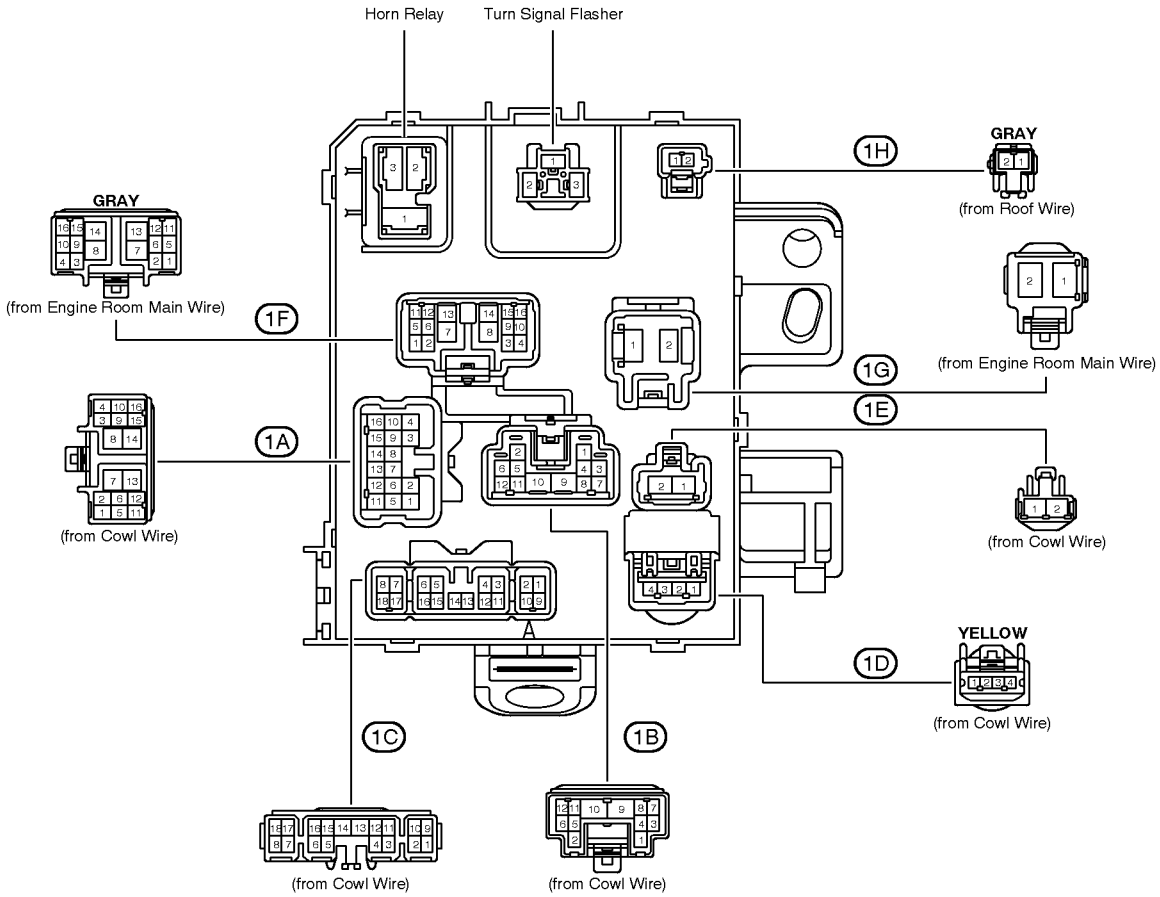

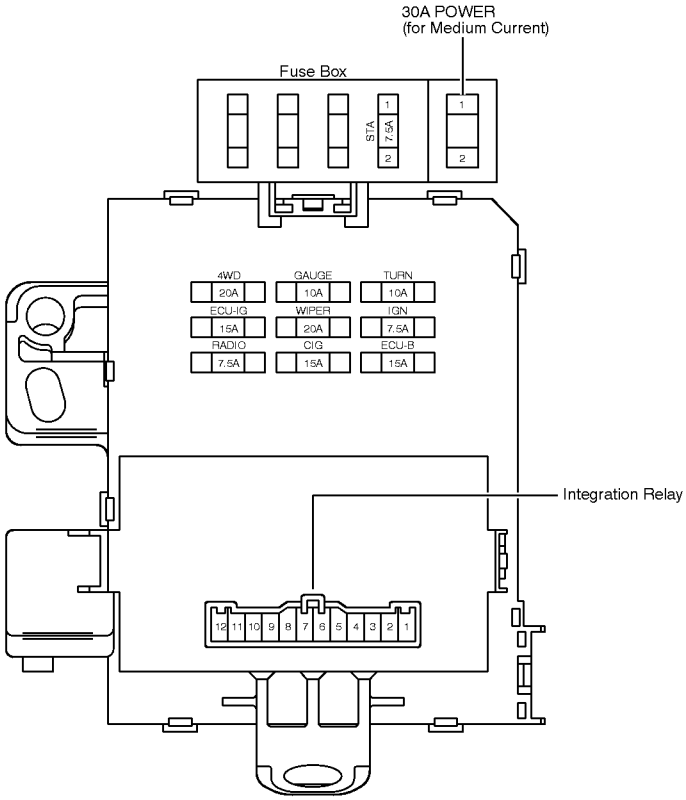

[J/B No.1 Inner Circuit]

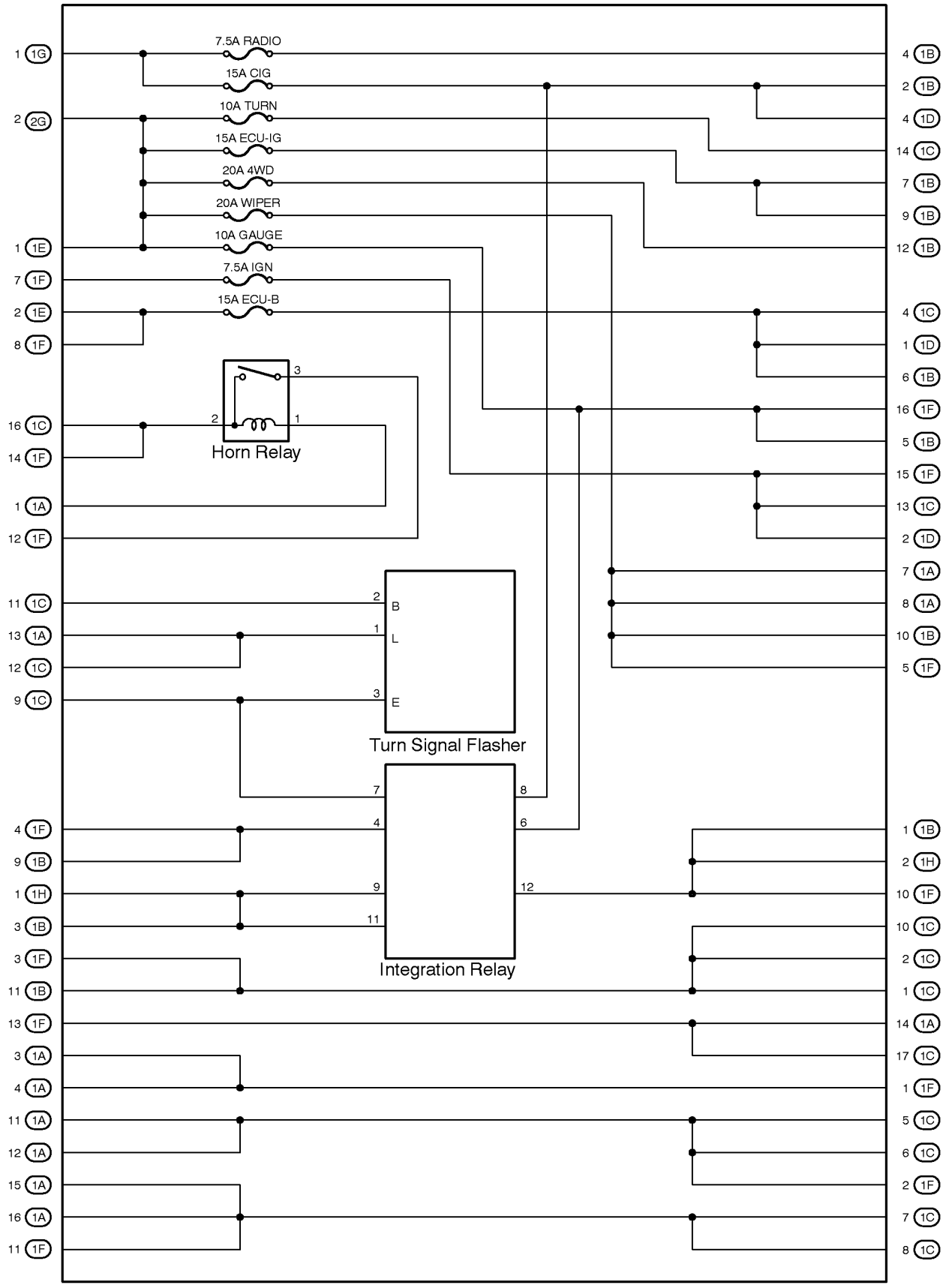

F RELAY LOCATIONS

: J/B No.3	Behind the Instrument Panel Left (See Page 20)

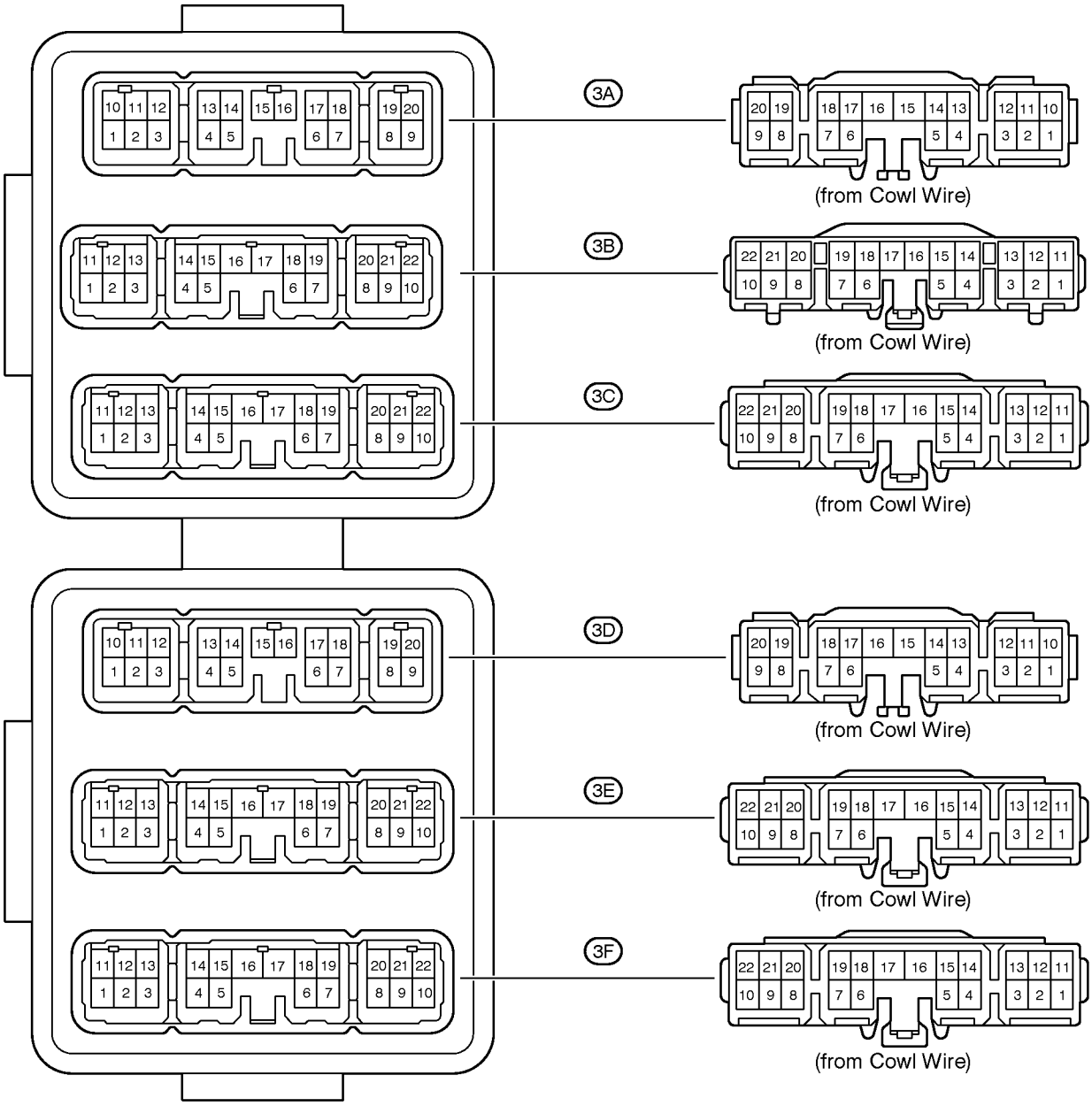

[J/B No.3 Inner Circuit]

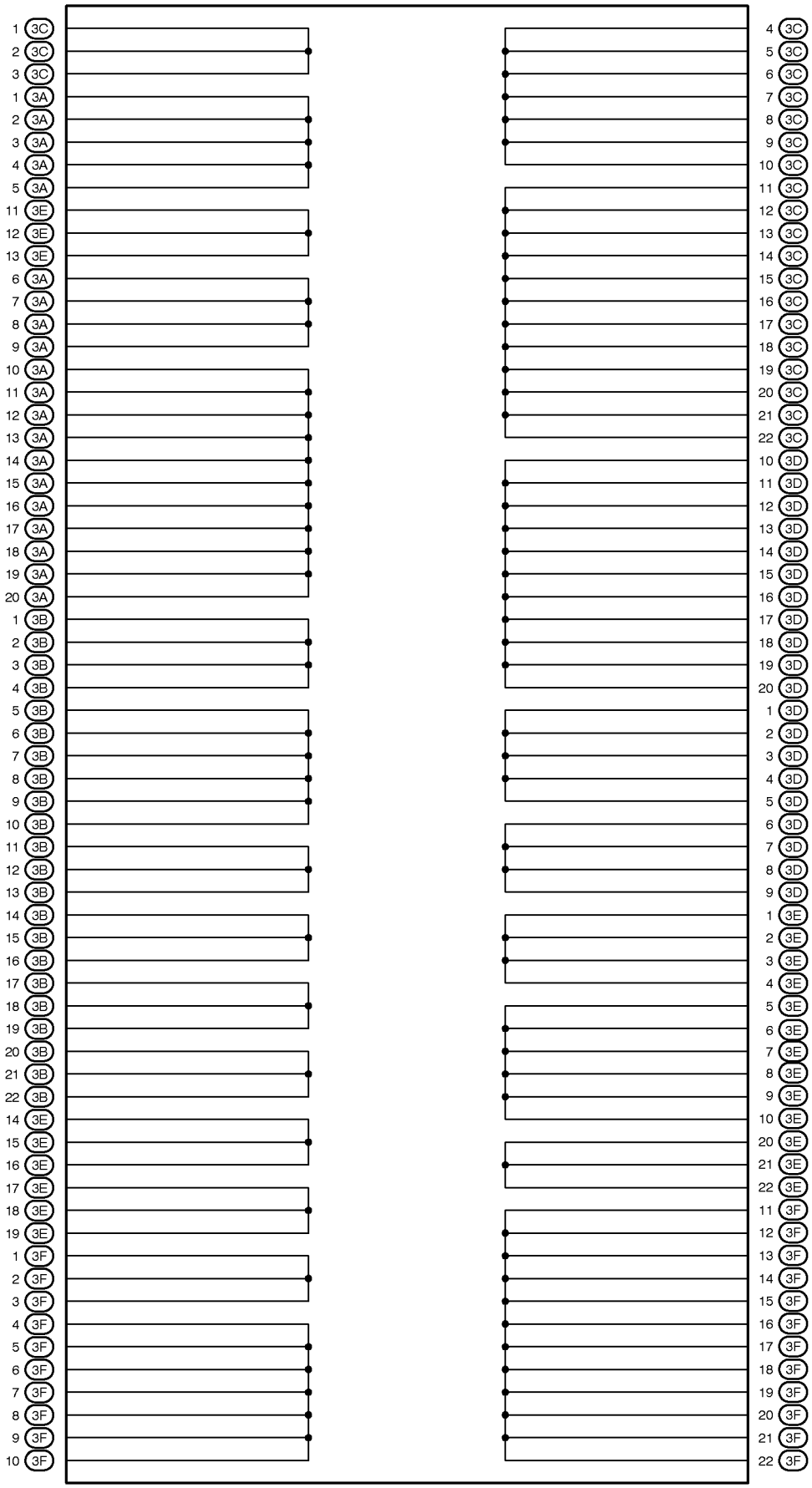

F RELAY LOCATIONS

: J/B No.3	Behind the Instrument Panel Center (See Page 20)

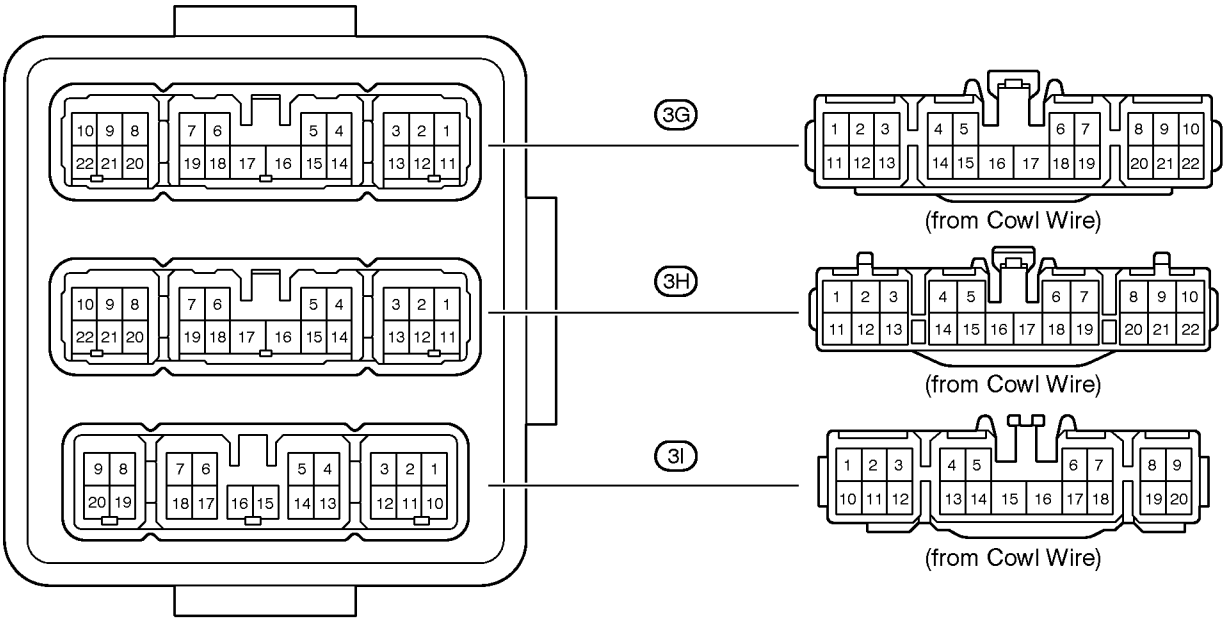

[J/B No.3 Inner Circuit]

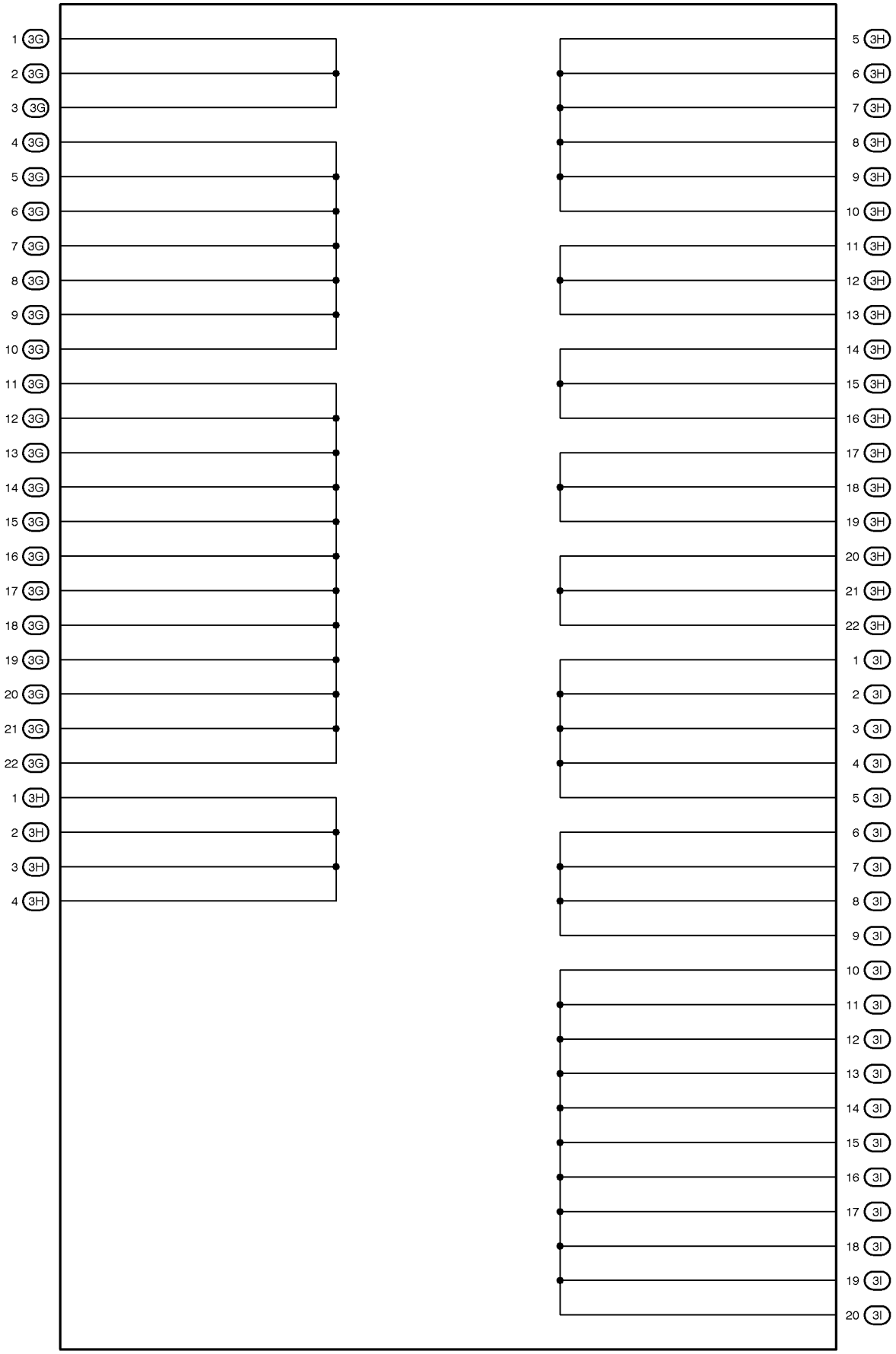

NOTICE: When inspecting or repairing the SRS, perform the operation in accordance with the following precautionary instructions and the procedure and precautions in the Repair Manual for the applicable model year.

- Malfunction symptoms of the SRS are difficult to confirm, so the DTCs become the most important source of information when troubleshooting. When troubleshooting the SRS, always inspect the DTCs before disconnecting the battery.
- **Work must be started after 90 seconds from when the ignition switch is turned to the "LOCK" position and the negative (–) terminal cable is disconnected from the battery.**
  (The SRS is equipped with a back–up power source so that if work is started within 90 seconds from disconnecting the negative (–) terminal cable of the battery, the SRS may be deployed.)
- When the negative (–) terminal cable is disconnected from the battery, the memory of the clock and audio system will be canceled. So before starting work, make a record of the contents memorized in the audio memory system. When work is finished, reset the audio systems as they were before and adjust the clock. To avoid erasing the memory in each memory system, never use a back–up power supply from outside the vehicle.
- Before repairs, remove the airbag sensor if shocks are likely to be applied to the sensor during repairs.
- Do not expose the steering wheel pad, front passenger airbag assembly, seat belt pretensioner, center airbag sensor assembly, front airbag sensor assembly directly to hot air or flames.
- Even in cases of a minor collision where the SRS does not deploy, the steering wheel pad, front passenger airbag assembly, seat belt pretensioner, center airbag sensor assembly and front airbag sensor assembly should be inspected.
- Never use SRS parts from another vehicle. When replacing parts, replace them with new parts.
- Never disassemble and repair the steering wheel pad, front passenger airbag assembly, side airbag assembly, seat belt pretensioner, center airbag sensor assembly, front airbag sensor assembly in order to reuse it.
- If the steering wheel pad, front passenger airbag assembly, side airbag assembly, seat belt pretensioner, center airbag sensor assembly, front airbag sensor assembly has been dropped, or if there are cracks, dents or other defects in the case, bracket or connector, replace them with new ones.
- Use a volt/ohmmeter with high impedance (10 kΩ/V minimum) for troubleshooting the system's electrical circuits.
- Information labels are attached to the periphery of the SRS components. Follow the instructions on the notices.
- After work on the SRS is completed, perform the SRS warning light check.
- If the vehicle is equipped with a mobile communication system, refer to the precaution in the IN section of the Repair Manual.

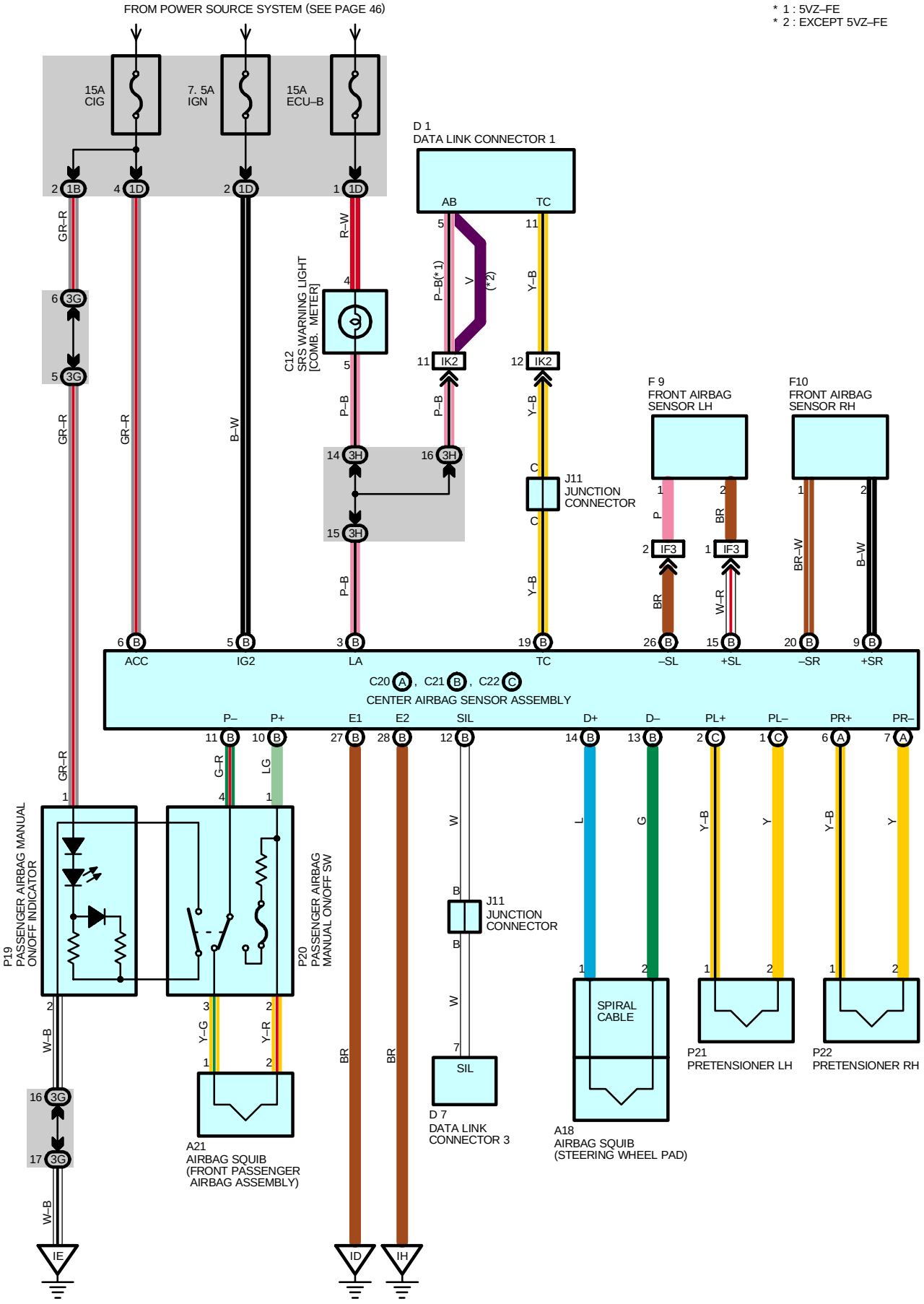
FROM POWER SOURCE SYSTEM (SEE PAGE 46)
* 1 : 5VZ–FE
* 2 : EXCEPT 5VZ–FE
15A CIG
7. 5A IGN
15A ECU–B
D 1
DATA LINK CONNECTOR 1
AB
TC
C12
SRS WARNING LIGHT [COMB. METER]
J11
JUNCTION CONNECTOR
F 9
FRONT AIRBAG SENSOR LH
F10
FRONT AIRBAG SENSOR RH
ACC
IG2
LA
TC
–SL
+SL
–SR
+SR
C20 A , C21 B , C22 C
CENTER AIRBAG SENSOR ASSEMBLY
P–
P+
E1
E2
SIL
D+
D–
PL+
PL–
PR+
PR–
P19
PASSENGER AIRBAG MANUAL ON/OFF INDICATOR
P20
PASSENGER AIRBAG MANUAL ON/OFF SW
A21
AIRBAG SQUIB (FRONT PASSENGER AIRBAG ASSEMBLY)
D 7
DATA LINK CONNECTOR 3
SPIRAL CABLE
A18
AIRBAG SQUIB (STEERING WHEEL PAD)
P21
PRETENSIONER LH
P22
PRETENSIONER RH
IE
ID
IH

SYSTEM OUTLINE

The SRS is a driver protection device which has a supplemental role to the seat belts.
When the ignition SW is turned to ACC or ON, the current from the CIG fuse flows to TERMINAL (B) 6 of the center airbag sensor assembly. Only when the ignition SW on, the current from the IGN fuse flows to TERMINAL (B) 5 of the center airbag sensor assembly.
If an accident occurs while driving, deceleration caused by a frontal impact is detected (by sensor) and when the frontal impact exceeds a set level, the current from the CIG or IGN fuse flows to TERMINALS (B) 6 or (B) 5 of the center airbag sensor assembly. This current flows to TERMINAL (B) 14 to TERMINAL 1 of the airbag squib (Steering wheel pad) to TERMINAL 2 to TERMINAL (B) 13 of the center airbag sensor assembly, and also flows to TERMINAL (B) 10 of the center airbag sensor assembly to TERMINAL 1 of the passenger airbag manual on/off SW to TERMINAL 3 to TERMINAL 2 of the airbag squib (Front passenger airbag assembly) to TERMINAL 1 to TERMINAL 2 of the passenger airbag manual on/off SW to TERMINAL 4 to TERMINAL (B) 11 of the center airbag sensor assembly. Furthermore, the current flows to TERMINAL (B) 27 or (B) 28 to GROUND, causing the center airbag squibs to expand.
When the safing sensor built into the center airbag sensor assembly is on, airbag sensor is off and the current from the CIG or IGN fuse flows same as above–mentioned flowing, causing the airbag squibs to expand. When the safing sensor built into the center airbag sensor assembly is on, the airbag sensor on one of the above-mentioned circuits is activated so that current flows to the airbag squibs and causes them to operate.
The airbag stored inside the steering wheel pad is instantaneously expanded to soften the shock to the driver.
The airbag stored inside the passenger's instrument panel is instantaneously expanded to soften the shock to the passenger.

1. FRONT PASSENGER AIRBAG MANUAL ON/OFF OPERATION

When the passenger airbag manual on/off SW is on, the current flowing from the CIG or IGN fuse to the airbag squib (Front passenger airbag assembly) is same as above, causing the airbag squib (Front passenger airbag assembly) to expand in an accident.
If the passenger airbag manual on/off SW is turned to off, the current flows from the CIG fuse to TERMINAL 1 of the passenger airbag manual on/off indicator to TERMINAL 2 to GROUND, lighting the indicator up. Then the current between TERMINAL (B) 11 of the airbag sensor assembly and the airbag squib (Front passenger airbag assembly) is cut off, so that it does not expand the airbag squib (Front passenger airbag assembly) in an accident.

: PARTS LOCATION

Code		See Page	Code	See Page	Code	See Page
A18		32	D1	28 (5VZ–FE)	F10	30 (3RZ–FE, 2RZ–FE)
A21		32		30 (3RZ–FE, 2RZ–FE)	J11	33
C12		32	D7	32	P19	33
C20	A	32	F9	28 (5VZ–FE)	P20	33
C21	B	32		30 (3RZ–FE, 2RZ–FE)	P21	34
C22	C	32	F10	28 (5VZ–FE)	P22	34

: JUNCTION BLOCK AND WIRE HARNESS CONNECTOR

Code	See Page	Junction Block and Wire Harness (Connector Location)
1B	22	Cowl Wire and J/B No.1 (Lower Finish Panel)
1D		
3G	26	Cowl Wire and J/B No.3 (Bihind the Instrument Panel Center)
3H		

: CONNECTOR JOINING WIRE HARNESS AND WIRE HARNESS

Code	See Page	Joining Wire Harness and Wire Harness (Connector Location)
IF3	40	Engine Room Main Wire and Cowl Wire (Left Kick Panel)
IK2	40	Engine Wire and Cowl Wire (Right Kick Panel)

: GROUND POINTS

Code	See Page	Ground Points Location
ID	40	Left Kick Panel
IE	40	Around the Right Edge of the Reinforcement
IH	40	Right Kick Panel

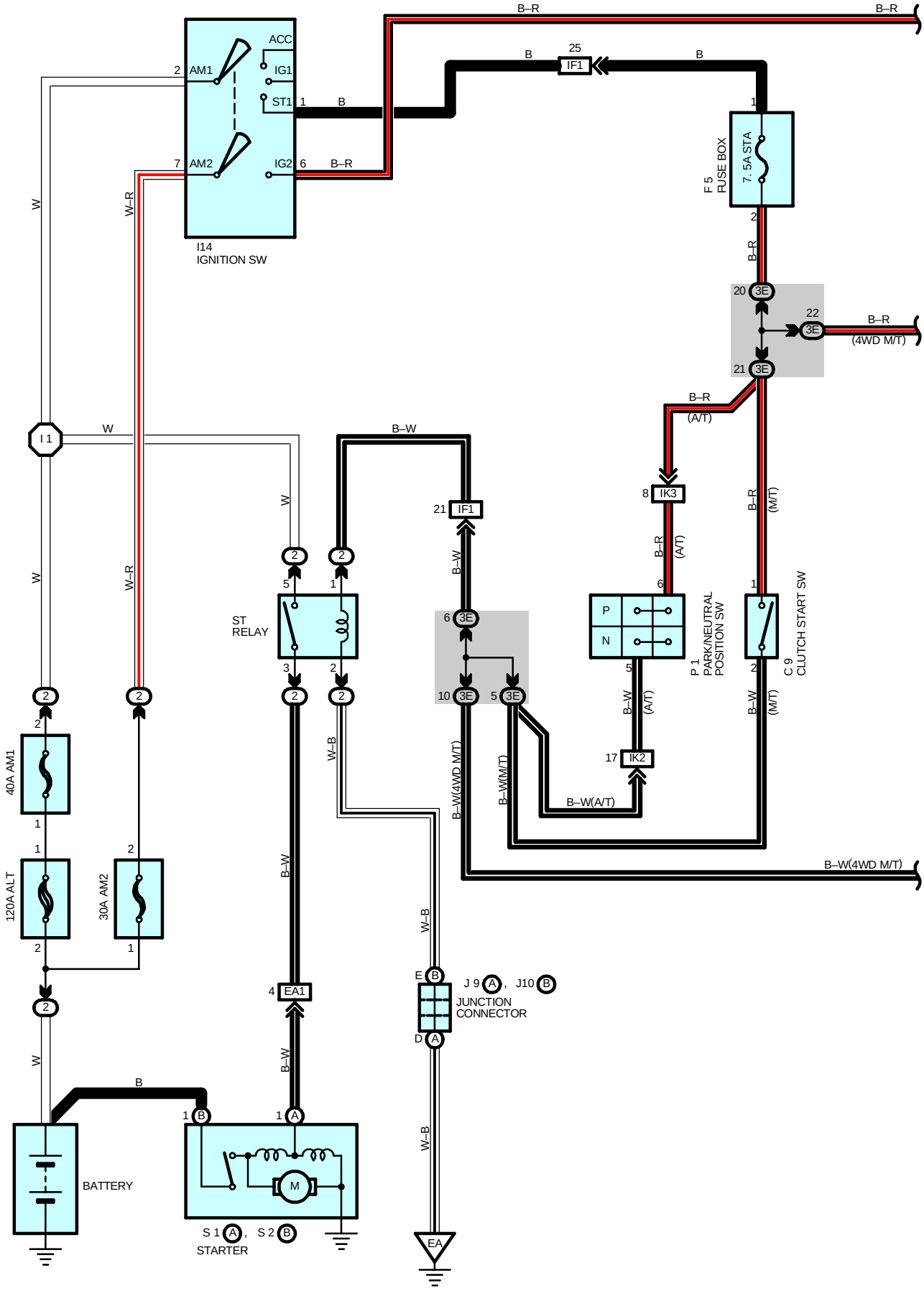
B–R
B–R
ACC
2 AM1
IG1
ST1 1 B
7 AM2
IG2 6 B–R
I14
IGNITION SW
B 25 IF1 B
1
F 5
RUSE BOX
7. 5A STA
2
B–R
20 3E
22 3E B–R
(4WD M/T)
21 3E
B–R
(A/T)
W
W–R
I 1
B–W
W
W–R
21 IF1
B–W
8 IK3
B–R
(A/T)
B–R
(M/T)
2 2
5 1
ST
RELAY
3 2
2 2
6 3E
6
P
N
5
1
P 1
PARK/NEUTRAL
POSITION SW
C 9
CLUTCH START SW
2 2
10 3E 5 3E
B–W
(A/T)
B–W
(M/T)
17 IK2
B–W(4WD M/T)
B–W(M/T)
B–W(A/T)
B–W(4WD M/T)
2
40A AM1
1
1
120A ALT
2
30A AM2
2
1
W–B
B–W
W–B
4 EA1
E B
J 9 A , J10 B
JUNCTION
CONNECTOR
D A
W
B
1 B
1 A
BATTERY
M
B–W
W–B
S 1 A , S 2 B
STARTER
EA

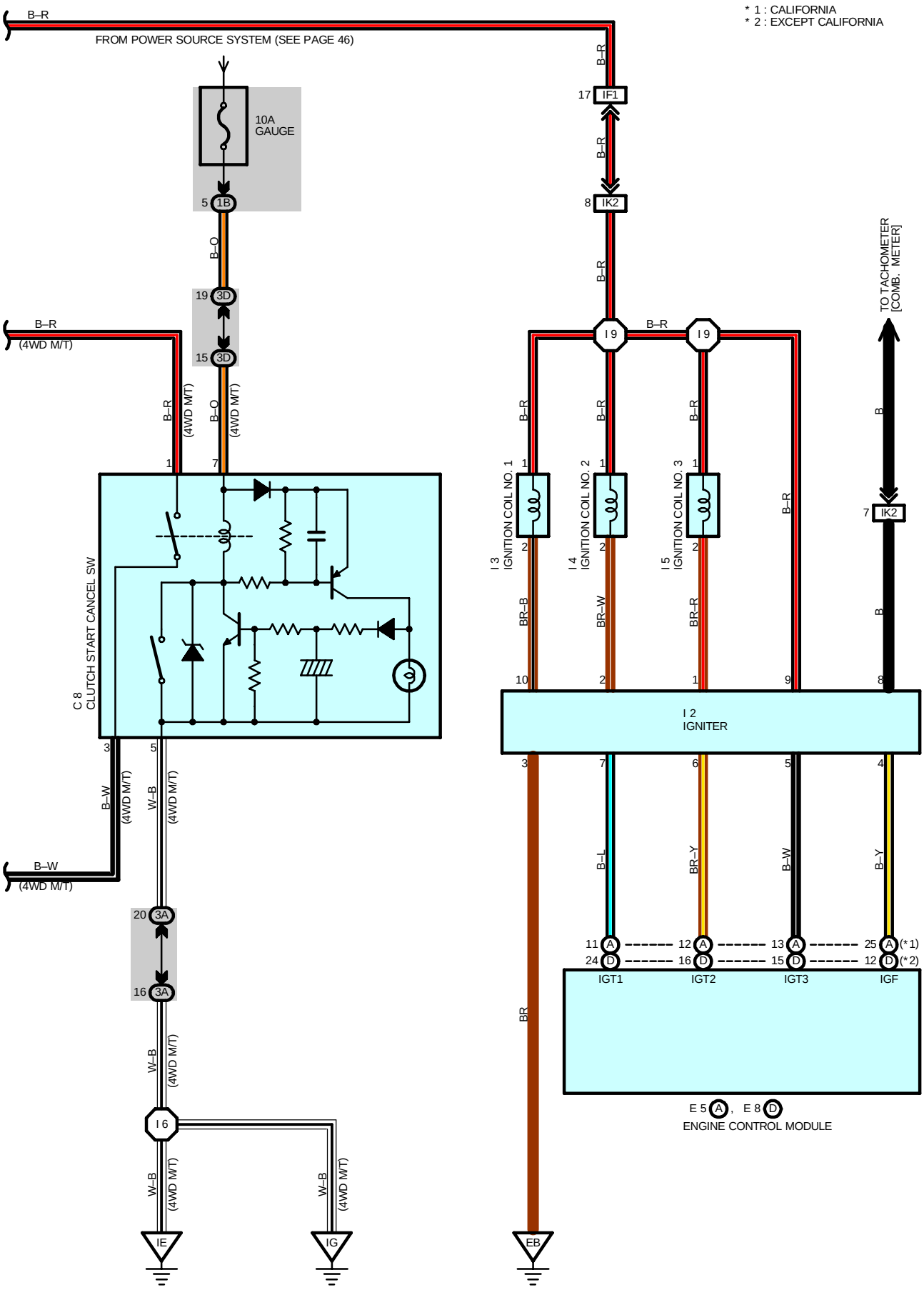
* 1 : CALIFORNIA
* 2 : EXCEPT CALIFORNIA
B–R
FROM POWER SOURCE SYSTEM (SEE PAGE 46)
10A
GAUGE
5 1B
B–O
19 3D
15 3D
B–R
(4WD M/T)
B–O
(4WD M/T)
1
7
C 8
CLUTCH START CANCEL SW
3
5
B–W
(4WD M/T)
W–B
(4WD M/T)
B–W
(4WD M/T)
20 3A
16 3A
W–B
(4WD M/T)
I 6
W–B
(4WD M/T)
W–B
(4WD M/T)
IE
IG
17 IF1
B–R
8 IK2
B–R
I 9
B–R
I 9
B–R
B–R
B–R
I 3
IGNITION COIL NO. 1
I 4
IGNITION COIL NO. 2
I 5
IGNITION COIL NO. 3
B–R
BR–B
BR–W
BR–R
10
2
1
9
I 2
IGNITER
3
7
6
5
4
B–L
BR–Y
B–W
B–Y
BR
11 A
24 D
12 A
16 D
13 A
15 D
25 A (*1)
12 D (*2)
IGT1
IGT2
IGT3
IGF
E 5 A , E 8 D
ENGINE CONTROL MODULE
EB
TO TACHOMETER
[COMB. METER]
B
7 IK2
B

STARTING AND IGNITION (5VZ–FE)

SERVICE HINTS

S1 (A), S2 (B) STARTER

Points closed with Park/Neutral position SW at **P** or **N** position and ignition SW at **ST** position (A/T)
Points closed with clutch start SW or clutch start cancel SW on and ignition SW at **ST** position (4WD M/T)
Points closed with clutch start SW on and ignition SW at **ST** position (2WD M/T)

I14 IGNITION SW

7–6 : Closed with ignition SW at **ON** or **ST** position
2–1 : Closed with ignition SW at **ST** position

P1 PARK/NEUTRAL POSITION SW (A/T)

6–5 : Closed with A/T shift lever in **P** or **N** position

ST RELAY [R/B NO.2]

5–3 : Closed with Park/Neutral position SW at **P** or **N** position and ignition SW at **ST** position (A/T)
5–3 : Closed with clutch start SW or clutch start cancel SW on and ignition SW at **ST** position (4WD M/T)
5–3 : Closed with clutch start SW on and ignition SW at **ST** position (2WD M/T)

C8 CLUTCH START CANCEL SW (4WD M/T)

1–3 : Closed with ignition SW on and cancel SW on

C9 CLUTCH START SW (M/T)

1–2 : Closed with clutch pedal fully depressed

: PARTS LOCATION

Code	See Page	Code	See Page	Code	See Page
C8	32	I2	29 (5VZ–FE)	J9 A	29 (5VZ–FE)
C9	32	I3	29 (5VZ–FE)	J10 B	29 (5VZ–FE)
E5 A	33	I4	29 (5VZ–FE)	P1	29 (5VZ–FE)
E8 D	33	I5	29 (5VZ–FE)	S1 A	29 (5VZ–FE)
F5	33	I14	33	S2 B	29 (5VZ–FE)

: RELAY BLOCKS

Code	See Page	Relay Blocks (Relay Block Location)
2	21	R/B No.2 (Engine Compartment Left)

: JUNCTION BLOCK AND WIRE HARNESS CONNECTOR

Code	See Page	Junction Block and Wire Harness (Connector Location)
1B	22	Cowl Wire and J/B No.1 (Lower Finish Panel)
3A	24	Cowl Wire and J/B No.3 (Bihind the Instrument Panel Left)
3D		
3E		

: CONNECTOR JOINING WIRE HARNESS AND WIRE HARNESS

Code	See Page	Joining Wire Harness and Wire Harness (Connector Location)
EA1	36 (5VZ–FE)	Engine Room Main Wire and Engine No.2 Wire (Near the Battery)
IF1	40	Engine Room Main Wire and Cowl Wire (Left Kick Panel)
IK2	40	Engine Wire and Cowl Wire (Right Kick Panel)
IK3		

: GROUND POINTS

Code	See Page	Ground Points Location
EA	36 (5VZ–FE)	Front Left Fender
EB	36 (5VZ–FE)	Under the Data Link Connector 1
IE	40	Around the Right Edge of the Reinforcement
IG	40	Around the Left Edge of the Reinforcement



: SPLICE POINTS

Code	See Page	Wire Harness with Splice Points	Code	See Page	Wire Harness with Splice Points
I1	40	Cowl Wire	I9	40	Cowl Wire
I6					

STOP LIGHT

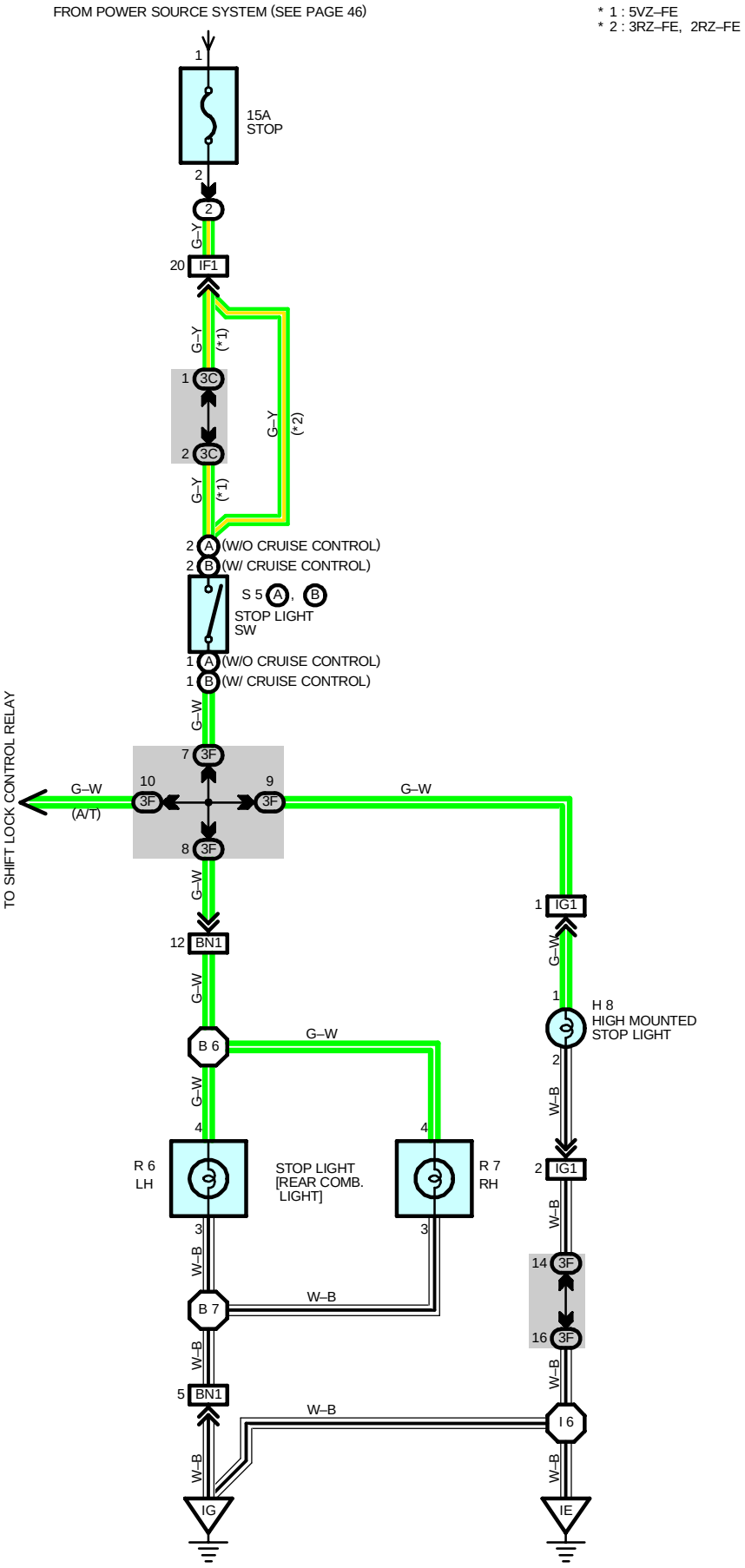
FROM POWER SOURCE SYSTEM (SEE PAGE 46)
* 1 : 5VZ–FE
* 2 : 3RZ–FE, 2RZ–FE
15A
STOP
G–Y
IF1
(*1)
3C
(*2)
(W/O CRUISE CONTROL)
(W/ CRUISE CONTROL)
S 5
STOP LIGHT
SW
G–W
3F
TO SHIFT LOCK CONTROL RELAY
(A/T)
BN1
B 6
B 7
R 6
LH
STOP LIGHT
[REAR COMB.
LIGHT]
R 7
RH
W–B
IG1
H 8
HIGH MOUNTED
STOP LIGHT
I 6
IG
IE

SERVICE HINTS

S5 (A), (B) STOP LIGHT SW

(A) 2–(A) 1, (B) 2–(B) 1 : Closed with brake pedal depressed

: PARTS LOCATION

Code	See Page	Code	See Page	Code	See Page
H8	34	R7	34	S5 B	33
R6	34	S5 A	33		

: RELAY BLOCKS

Code	See Page	Relay Blocks (Relay Block Location)
2	21	R/B No.2 (Engine Compartment Left)

: JUNCTION BLOCK AND WIRE HARNESS CONNECTOR

Code	See Page	Junction Block and Wire Harness (Connector Location)
3C	24	Cowl Wire and J/B No.3 (Bihind the Instrument Panel Left)
3F		

: CONNECTOR JOINING WIRE HARNESS AND WIRE HARNESS

Code	See Page	Joining Wire Harness and Wire Harness (Connector Location)
IF1	40	Engine Room Main Wire and Cowl Wire (Left Kick Panel)
IG1	40	Cowl Wire and Roof Wire (Left Kick Panel)
BN1	42	Frame Wire and Cowl Wire (Under the Driver's Seat)

: GROUND POINTS

Code	See Page	Ground Points Location
IE	40	Around the Right Edge of the Reinforcement
IG	40	Around the Left Edge of the Reinforcement

: SPLICE POINTS

Code	See Page	Wire Harness with Splice Points	Code	See Page	Wire Harness with Splice Points
I6	40	Cowl Wire	B7	42	Frame Wire
B6	42	Frame Wire			

TAILLIGHT AND ILLUMINATION

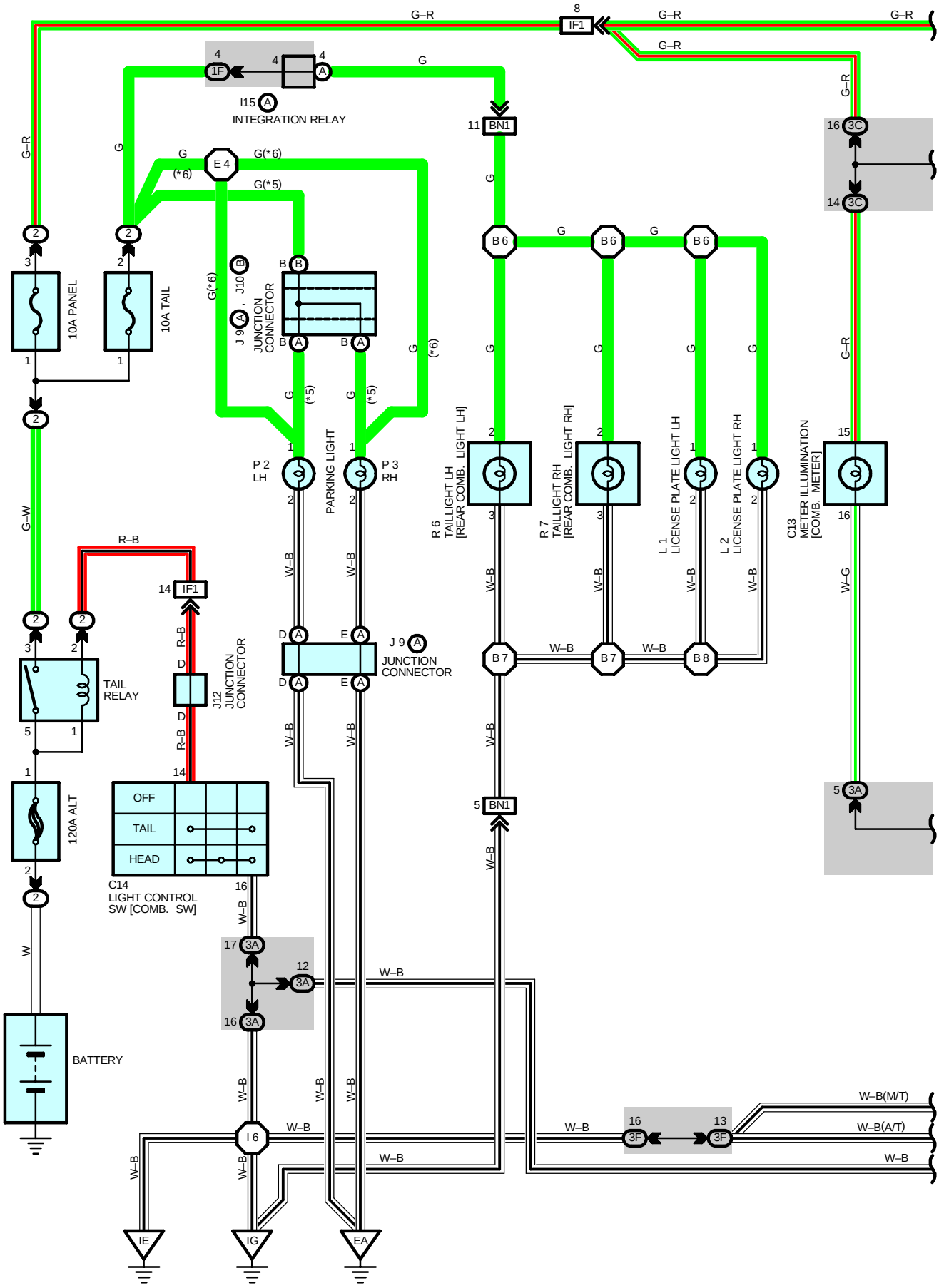

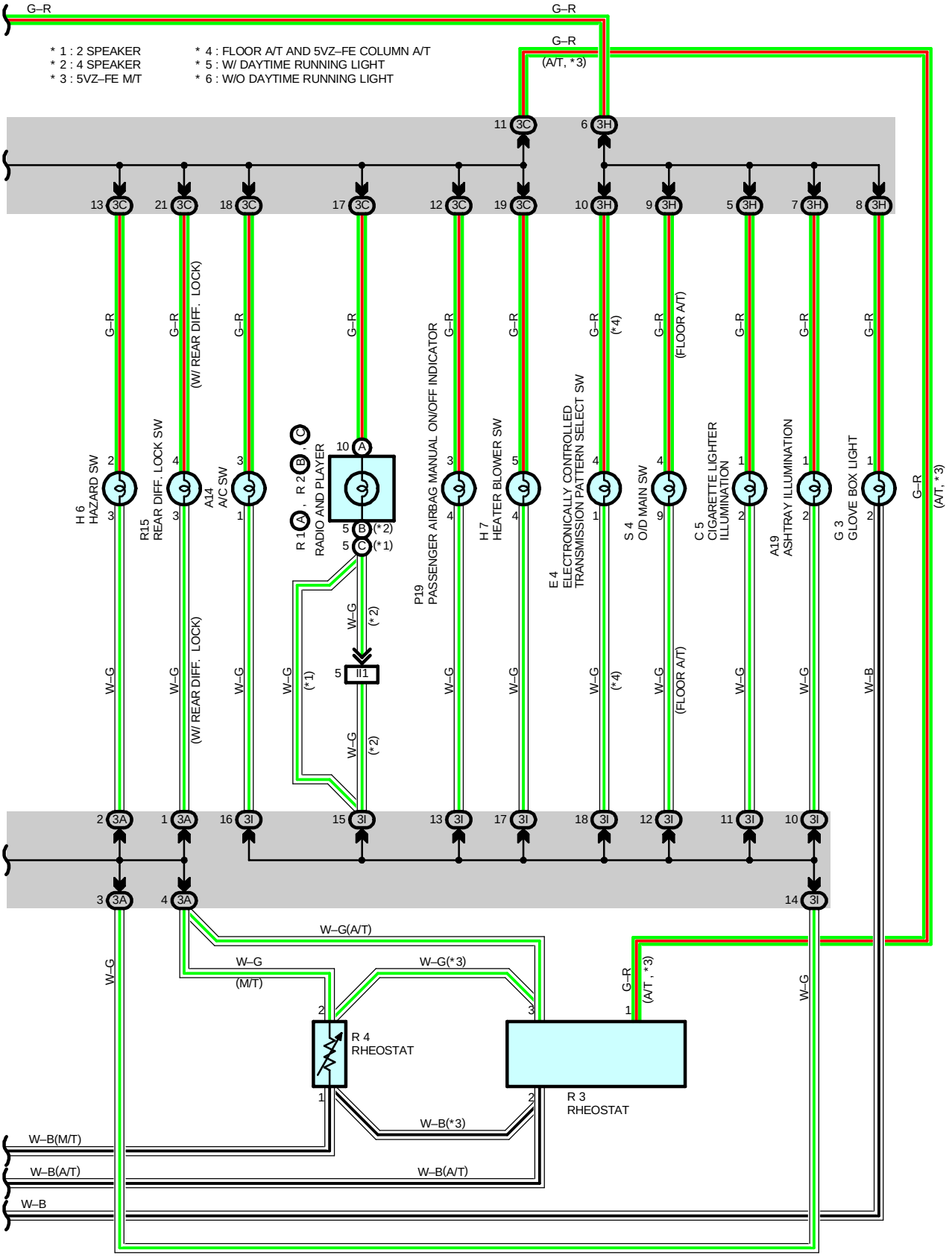
* 1 : 2 SPEAKER
* 2 : 4 SPEAKER
* 3 : 5VZ–FE M/T
* 4 : FLOOR A/T AND 5VZ–FE COLUMN A/T
* 5 : W/ DAYTIME RUNNING LIGHT
* 6 : W/O DAYTIME RUNNING LIGHT
G–R
G–R
G–R
(A/T, *3)
11 3C
6 3H
13 3C
21 3C
18 3C
17 3C
12 3C
19 3C
10 3H
9 3H
5 3H
7 3H
8 3H
H 6
HAZARD SW
R15
REAR DIFF. LOCK SW
A14
A/C SW
R 1 , R 2
RADIO AND PLAYER
P19
PASSENGER AIRBAG MANUAL ON/OFF INDICATOR
H 7
HEATER BLOWER SW
E 4
ELECTRONICALLY CONTROLLED
TRANSMISSION PATTERN SELECT SW
S 4
O/D MAIN SW
C 5
CIGARETTE LIGHTER
ILLUMINATION
A19
ASHTRAY ILLUMINATION
G 3
GLOVE BOX LIGHT
(W/ REAR DIFF. LOCK)
(FLOOR A/T)
(*4)
(*2)
(*1)
W–G
W–B
2 3A
1 3A
16 3I
15 3I
13 3I
17 3I
18 3I
12 3I
11 3I
10 3I
3 3A
4 3A
14 3I
W–G(A/T)
W–G
(M/T)
W–G(*3)
R 4
RHEOSTAT
R 3
RHEOSTAT
W–B(*3)
W–B(M/T)
W–B(A/T)
W–B

TAILLIGHT AND ILLUMINATION

SERVICE HINTS

C14 LIGHT CONTROL SW [COMB. SW]

14–16 : Closed with light control SW at **TAIL** or **HEAD** position

TAIL RELAY [R/B NO.2]

3–5 : Closed with light control SW at **TAIL** or **HEAD** position

: PARTS LOCATION

Code	See Page	Code	See Page	Code	See Page
A14	32	J9 A	29 (5VZ–FE)	R1 A	33
A19	32	J10 B	29 (5VZ–FE)	R2 B	33
C5	32		31 (3RZ–FE,2RZ–FE)	R2 C	33
C13	32	J12	33	R3	33
C14	32	L1	34	R4	33
E4	33	L2	34	R6	34
G3	33	P2	29 (5VZ–FE)	R7	34
H6	33		31 (3RZ–FE,2RZ–FE)	R15	33
H7	33	P3	29 (5VZ–FE)	S4	33
I15 A	33		31 (3RZ–FE,2RZ–FE)		
J9 A	31 (3RZ–FE,2RZ–FE)	P19	33		

: RELAY BLOCKS

Code	See Page	Relay Blocks (Relay Block Location)
2	21	R/B No.2 (Engine Compartment Left)

: JUNCTION BLOCK AND WIRE HARNESS CONNECTOR

Code	See Page	Junction Block and Wire Harness (Connector Location)
1F	22	Engine Room Main Wire and J/B No.1 (Lower Finish Panel)
3A	24	Cowl Wire and J/B No.3 (Bihind the Instrument Panel Left)
3C		
3F		
3H	26	Cowl Wire and J/B No.3 (Bihind the Instrument Panel Center)
3I		

: CONNECTOR JOINING WIRE HARNESS AND WIRE HARNESS

Code	See Page	Joining Wire Harness and Wire Harness (Connector Location)
IF1	40	Engine Room Main Wire and Cowl Wire (Left Kick Panel)
II1	40	Cowl Wire and Floor No.3 Wire (Instrument Panel Brace)
BN1	42	Frame Wire and Cowl Wire (Under the Driver's Seat)

: GROUND POINTS

Code	See Page	Ground Points Location
EA	36 (5VZ–FE)	Front Left Fender
	38 (3RZ–FE, 2RZ–FE)	
IE	40	Around the Right Edge of the Reinforcement
IG	40	Around the Left Edge of the Reinforcement

: SPLICE POINTS

Code	See Page	Wire Harness with Splice Points	Code	See Page	Wire Harness with Splice Points
E4	36 (5VZ–FE)	Engine Room Main Wire	B6	42	Frame Wire
	38 (3RZ–FE, 2RZ–FE)		B7		
I6	40	Cowl Wire	B8		

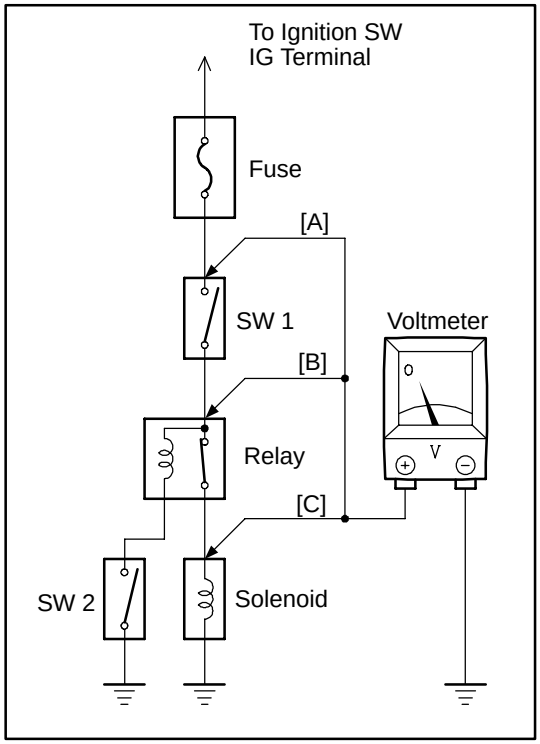

VOLTAGE CHECK

(a) Establish conditions in which voltage is present at the check point.

Example:
[A] – Ignition SW on
[B] – Ignition SW and SW 1 on
[C] – Ignition SW, SW 1 and Relay on (SW 2 off)

(b) Using a voltmeter, connect the negative lead to a good ground point or negative battery terminal, and the positive lead to the connector or component terminal.
This check can be done with a test light instead of a voltmeter.

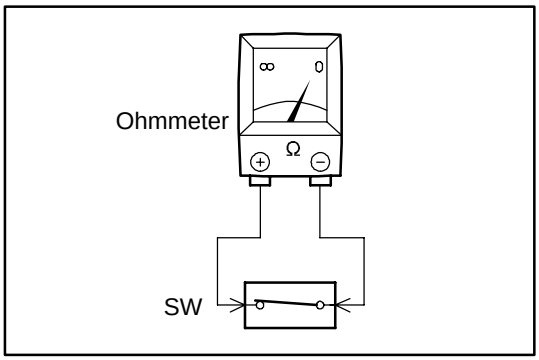

CONTINUITY AND RESISTANCE CHECK

(a) Disconnect the battery terminal or wire so there is no voltage between the check points.

(b) Contact the two leads of an ohmmeter to each of the check points.

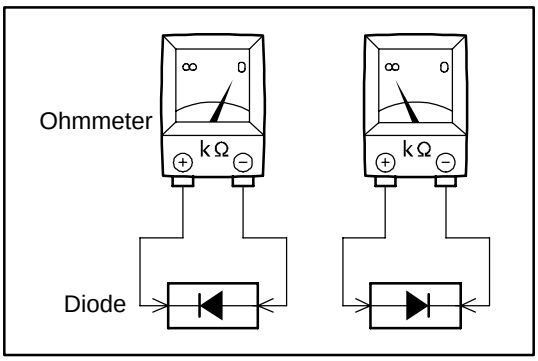

If the circuit has diodes, reverse the two leads and check again.
When contacting the negative lead to the diode positive side and the positive lead to the negative side, there should be continuity.
When contacting the two leads in reverse, there should be no continuity.

(c) Use a volt/ohmmeter with high impedance (10 kΩ/V minimum) for troubleshooting of the electrical circuit.

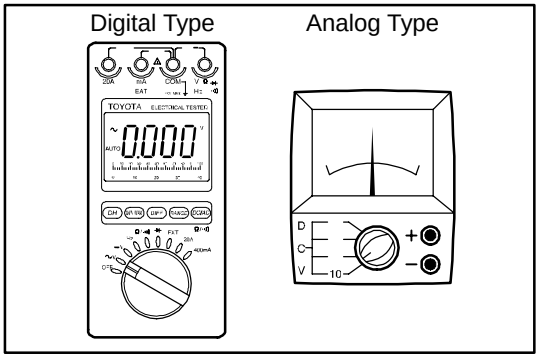

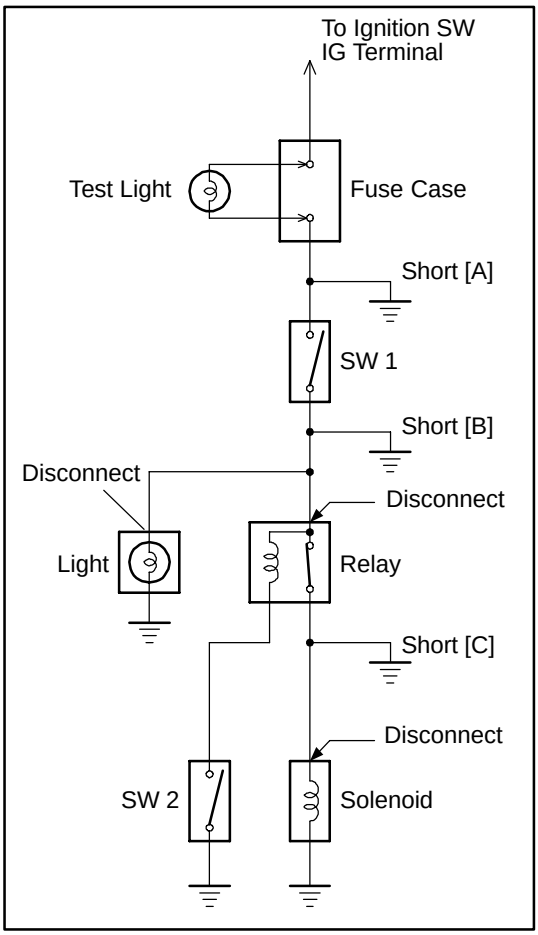

FINDING A SHORT CIRCUIT

(a) Remove the blown fuse and disconnect all loads of the fuse.

(b) Connect a test light in place of the fuse.

(c) Establish conditions in which the test light comes on.

Example:
[A] – Ignition SW on
[B] – Ignition SW and SW 1 on
[C] – Ignition SW, SW 1 and Relay on (Connect the Relay) and SW 2 off (or Disconnect SW 2)

(d) Disconnect and reconnect the connectors while watching the test light.
The short lies between the connector where the test light stays lit and the connector where the light goes out.

(e) Find the exact location of the short by lightly shaking the problem wire along the body.

CAUTION:

(a) Do not open the cover or the case of the ECU unless absolutely necessary. (If the IC terminals are touched, the IC may be destroyed by static electricity.)

(b) When replacing the internal mechanism (ECU part) of the digital meter, be careful that no part of your body or clothing comes in contact with the terminals of leads from the IC, etc. of the replacement part (spare part).

DISCONNECTION OF MALE AND FEMALE CONNECTORS

To pull apart the connectors, pull on the connector itself, not the wire harness.

HINT : Check to see what kind of connector you are disconnecting before pulling apart.

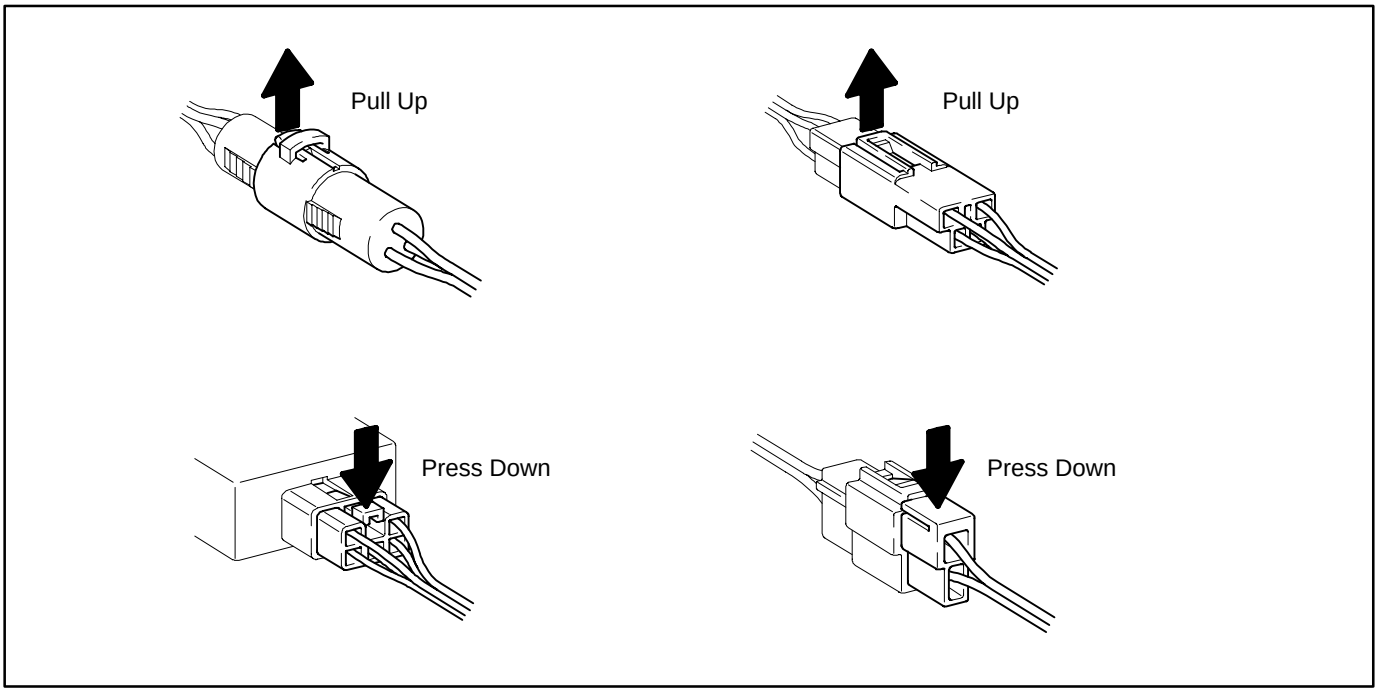

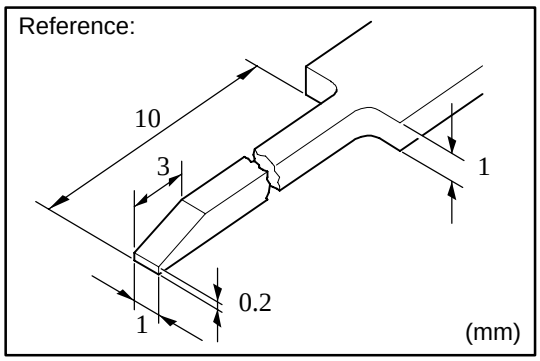

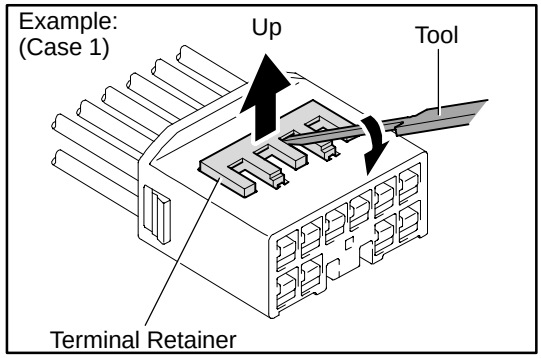

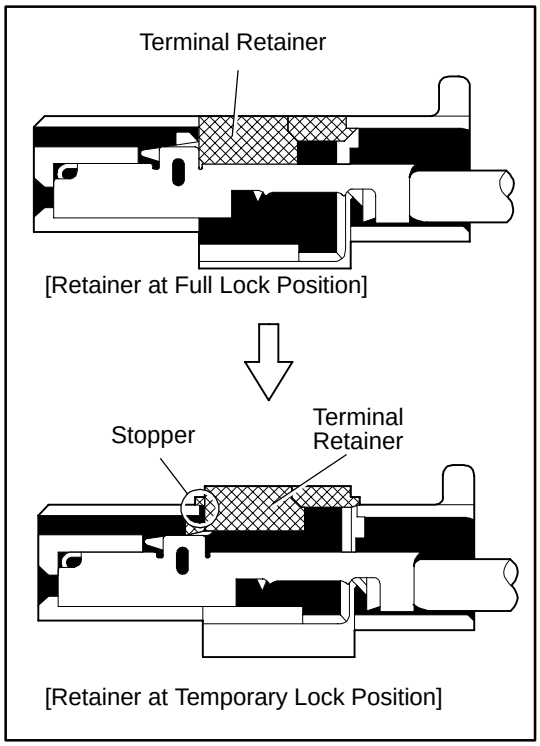

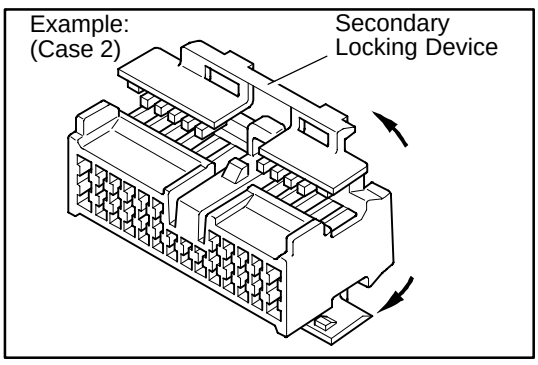

HOW TO REPLACE TERMINAL (with terminal retainer or secondary locking device)

1. PREPARE THE SPECIAL TOOL

   HINT : To remove the terminal from the connector, please construct and use the special tool or like object shown on the left.

2. DISCONNECT CONNECTOR

3. DISENGAGE THE SECONDARY LOCKING DEVICE OR TERMINAL RETAINER.

   (a) Locking device must be disengaged before the terminal locking clip can be released and the terminal removed from the connector.

   (b) Use a special tool or the terminal pick to unlock the secondary locking device or terminal retainer.

   NOTICE:
   Do not remove the terminal retainer from connector body.

   [A] For Non–Waterproof Type Connector

   HINT : The needle insertion position varies according to the connector's shape (number of terminals etc.), so check the position before inserting it.

   "Case 1"

   Raise the terminal retainer up to the temporary lock position.

   "Case 2"

   Open the secondary locking device.

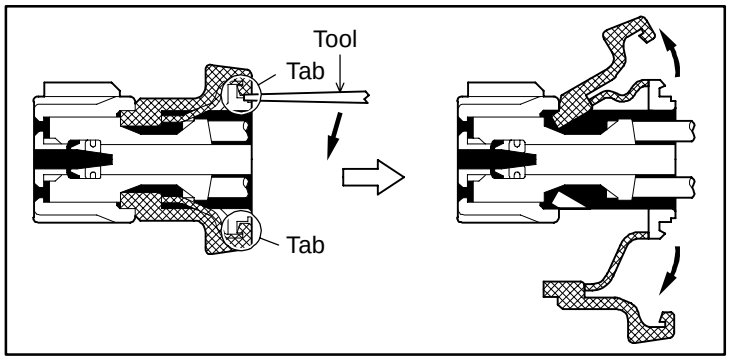

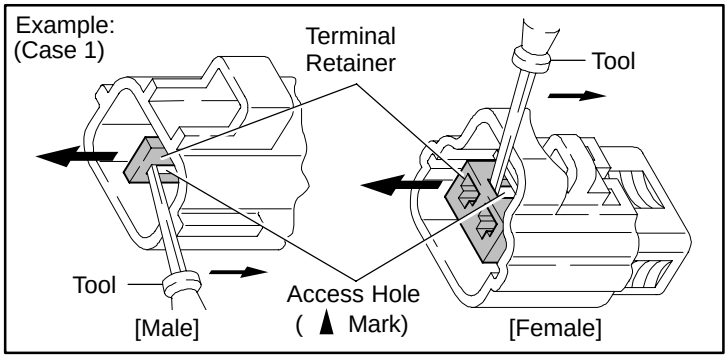

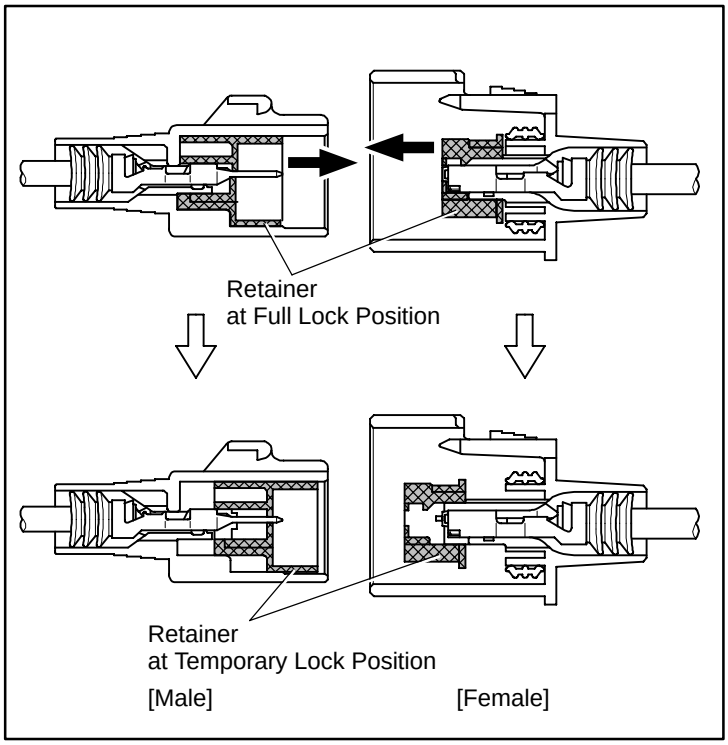

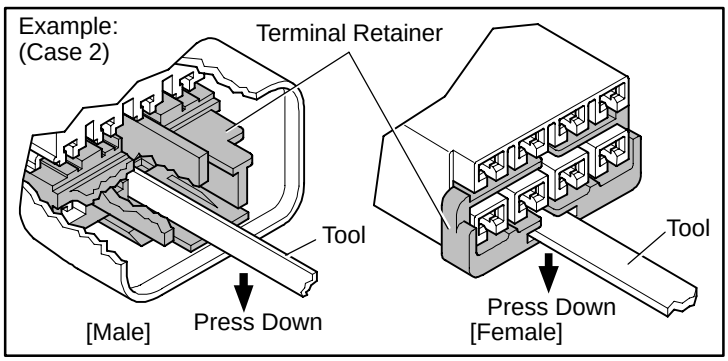

[B] For Waterproof Type Connector

HINT : Terminal retainer color is different according to connector body.

Example:

Terminal Retainer	: Connector Body
Black or White	: Gray
Black or White	: Dark Gray
Gray or White	: Black

”Case 1”

Type where terminal retainer is pulled up to the temporary lock position (Pull Type).

Insert the special tool into the terminal retainer access hole (▲Mark) and pull the terminal retainer up to the temporary lock position.

HINT : The needle insertion position varies according to the connector’s shape (Number of terminals etc.), so check the position before inserting it.

”Case 2”

Type which cannot be pulled as far as Power Lock insert the tool straight into the access hole of terminal retainer as shown.

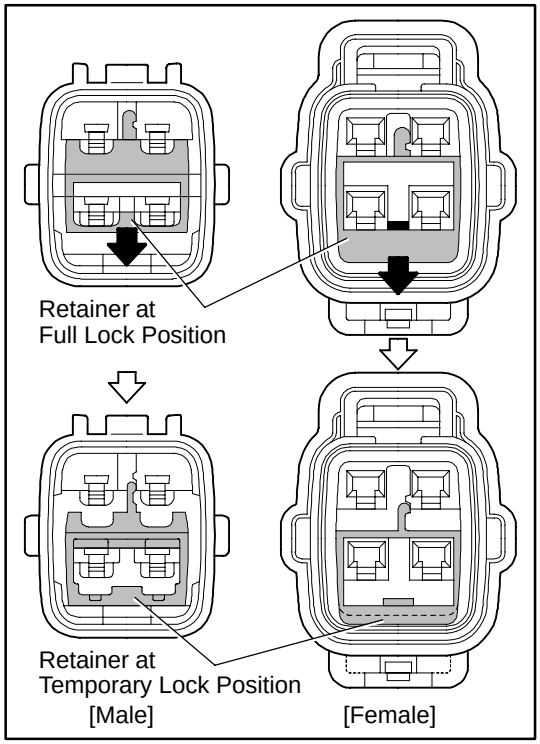

Push the terminal retainer down to the temporary lock position.

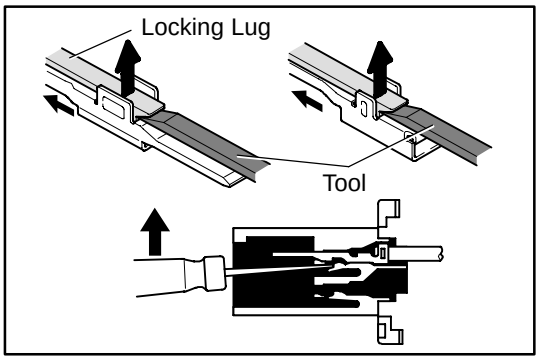

(c) Release the locking lug from terminal and pull the terminal out from rear.

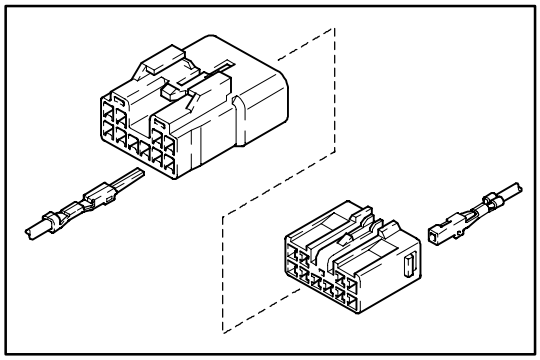

4. INSTALL TERMINAL TO CONNECTOR

(a) Insert the terminal.

HINT:
1. Make sure the terminal is positioned correctly.
2. Insert the terminal until the locking lug locks firmly.
3. Insert the terminal with terminal retainer in the temporary lock position.

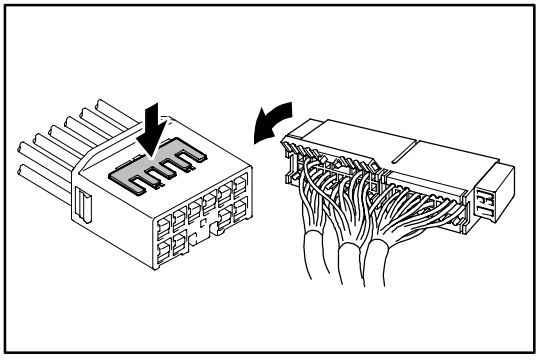

(b) Push the secondary locking device or terminal retainer in to the full lock position.

5. CONNECT CONNECTOR

TURN SIGNAL AND HAZARD WARNING LIGHT

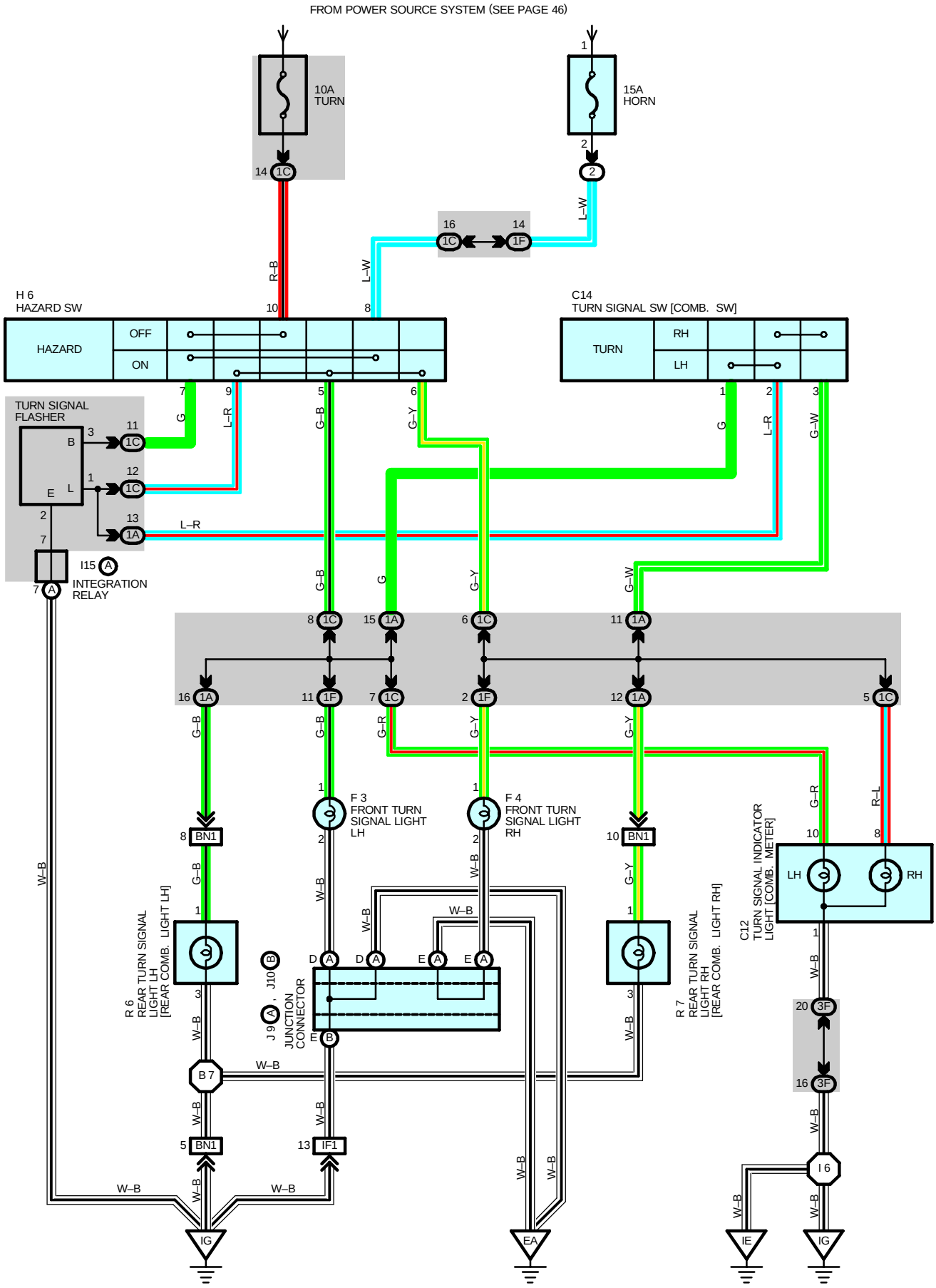

SERVICE HINTS

TURN SIGNAL FLASHER [J/B NO.1]

3–GROUND : Approx. **12** volts with ignition SW on or hazard SW on

1–GROUND : Changes from **12** to **0** volts with ignition SW on and turn signal SW left or right, or with hazard SW on

: PARTS LOCATION

Code	See Page	Code		See Page	Code		See Page
C12	32	F4		30 (3RZ–FE, 2RZ–FE)	J10	B	29 (5VZ–FE)
C14	32	H6		33			31 (3RZ–FE, 2RZ–FE)
F3	28 (5VZ–FE)	I15	A	33	R6		34
	30 (3RZ–FE, 2RZ–FE)	J9	A	29 (5VZ–FE)	R7		34
F4	28 (5VZ–FE)			31 (3RZ–FE, 2RZ–FE)			

: RELAY BLOCKS

Code	See Page	Relay Blocks (Relay Block Location)
2	21	R/B No.2 (Engine Compartment Left)

: JUNCTION BLOCK AND WIRE HARNESS CONNECTOR

Code	See Page	Junction Block and Wire Harness (Connector Location)
1A	22	Cowl Wire and J/B No.1 (Lower Finish Panel)
1C		
1F	22	Engine Room Main Wire and J/B No.1 (Lower Finish Panel)
3F	24	Cowl Wire and J/B No.3 (Bihind the Instrument Panel Left)

: CONNECTOR JOINING WIRE HARNESS AND WIRE HARNESS

Code	See Page	Joining Wire Harness and Wire Harness (Connector Location)
IF1	40	Engine Room Main Wire and Cowl Wire (Left Kick Panel)
BN1	42	Frame Wire and Cowl Wire (Under the Driver's Seat)

: GROUND POINTS

Code	See Page	Ground Points Location
EA	36 (5VZ–FE)	Front Left Fender
	38 (3RZ–FE,2RZ–FE)	
IE	40	Around the Right Edge of the Reinforcement
IG	40	Around the Left Edge of the Reinforcement

: SPLICE POINTS

Code	See Page	Wire Harness with Splice Points	Code	See Page	Wire Harness with Splice Points
I6	40	Cowl Wire	B7	42	Frame Wire

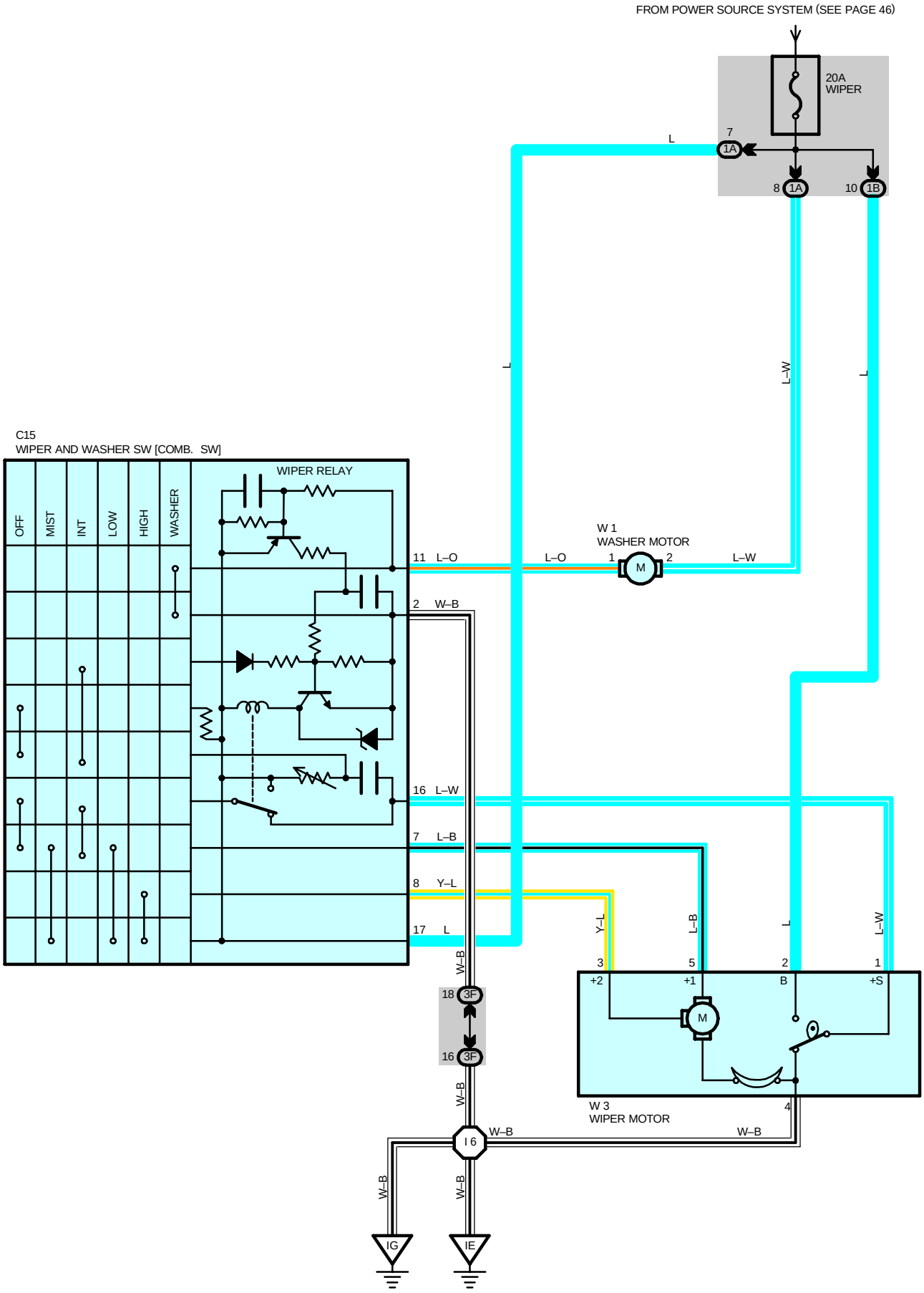
FROM POWER SOURCE SYSTEM (SEE PAGE 46)
20A
WIPER
7
1A
L
8
1A
10
1B
L
L–W
L
C15
WIPER AND WASHER SW [COMB. SW]
OFF
MIST
INT
LOW
HIGH
WASHER
WIPER RELAY
W 1
WASHER MOTOR
11 L–O
L–O
1
M
2
L–W
2 W–B
16 L–W
7 L–B
8 Y–L
17 L
W–B
18 3F
16 3F
Y–L
L–B
L
L–W
3
5
2
1
+2
+1
B
+S
M
W 3
WIPER MOTOR
4
W–B
W–B
I 6
W–B
W–B
IG
IE

SYSTEM OUTLINE

With the ignition SW turned on, current flows to TERMINAL 17 of the wiper and washer SW, TERMINAL 2 of the washer motor and TERMINAL 2 of the wiper motor through the WIPER fuse.

1. LOW SPEED POSITION

With wiper SW turned to LOW position, current flows from TERMINAL 17 of the wiper and washer SW to TERMINAL 7 to TERMINAL 5 of the wiper motor to TERMINAL 4 to GROUND and causes the wiper motor to run at low speed.

2. HIGH SPEED POSITION

With wiper SW turned to HIGH position, current flows from TERMINAL 17 of the wiper and washer SW to TERMINAL 8 to TERMINAL 3 of the wiper motor to TERMINAL 4 to GROUND and causes the motor to run at high speed.

3. INT POSITION (w/ INT SW)

With wiper SW turned to INT position, the relay operates and the current which is connected by relay function flows from TERMINAL 17 of the wiper and washer SW to TERMINAL 2 to GROUND. This flowing the intermittent circuit and current flows from TERMINAL 17 of the wiper and washer SW to TERMINAL 7 to TERMINAL 5 of the wiper motor to TERMINAL 4 to GROUND and the wiper functions.

The intermittent operation is controlled by charging and discharging of the condenser installed in the relay and the intermittent time is controlled by a time control SW to change the charging time of the condenser.

4. MIST POSITION (w/ MIST SW)

With the wiper SW turned to MIST position, current flows from TERMINAL 17 of the wiper and washer SW to TERMINAL 7 to TERMINAL 5 of the wiper motor to TERMINAL 4 to GROUND and causes the wiper motor to run at low speed.

5. WASHER CONTINUOUS OPERATION

With the washer SW turned to on, current flows from TERMINAL 2 of the washer motor to TERMINAL 1 to TERMINAL 11 of the wiper and washer SW to TERMINAL 2 to GROUND and causes to the washer motor to run, and the window washer is jetted.

This causes current to flow to washer continuous operation circuit (w/ INT SW) in TERMINAL 17 of the wiper and washer SW to TERMINAL 7 to TERMINAL 5 of the wiper motor to TERMINAL 4 to GROUND and the wiper functions.

SERVICE HINTS

C15 WIPER AND WASHER SW [COMB. SW]

2–GROUND : Always continuity
17–GROUND : Approx. **12** volts with ignition SW at **ON** position
7–GROUND : Approx. **12** volts with wiper and washer SW at **LOW** or **MIST** position
Approx. **12** volts every **3** to **12** seconds intermittently with wiper SW at **INT** position
16–GROUND : Approx. **12** volts with ignition SW on unless wiper motor at **STOP** position
8–GROUND : Approx. **12** volts with ignition SW on and wiper and washer SW at **HIGH** position
11–2 : Continuity with washer SW on

W3 WIPER MOTOR

1–2 : Closed unless wiper motor at **STOP** position

: PARTS LOCATION

Code	See Page	Code	See Page	Code	See Page
C15	32	W1	31 (3RZ–FE, 2RZ–FE)	W3	31 (3RZ–FE, 2RZ–FE)
W1	29 (5VZ–FE)	W3	29 (5VZ–FE)		

: JUNCTION BLOCK AND WIRE HARNESS CONNECTOR

Code	See Page	Junction Block and Wire Harness (Connector Location)
1A	22	Cowl Wire and J/B No.1 (Lower Finish Panel)
1B		
3F	24	Cowl Wire and J/B No.3 (Bihind the Instrument Panel Left)

: GROUND POINTS

Code	See Page	Ground Points Location
IE	40	Around the Right Edge of the Reinforcement
IG	40	Around the Left Edge of the Reinforcement

: **SPLICE POINTS**

Code	See Page	Wire Harness with Splice Points	Code	See Page	Wire Harness with Splice Points
I6	40	Cowl Wire			